SwissDRG 15.0 Katalogversion (2023/2026)

Swiss Diagnosis Related Groups Version 15.0

Definitionshandbuch

Band 5

Anhänge

© 2025 by SwissDRG AG, Bern, Schweiz

Alle Rechte vorbehalten. Die Definitionshandbücher sind urheberrechtlich geschützt. Jede Verwertung ausserhalb der Nutzungsbedingungen der SwissDRG AG ist ohne vorherige schriftliche Zustimmung unzulässig.

SwissDRG-Version 15.0 Katalogversion (2023/2026)
Definitionshandbuch

Inhaltsverzeichnis

Band 1 (DRGs A01Z-F98D)

Abbildungs- und Tabellenverzeichnis VI

Begleit-Dokumente zum SwissDRG Definitionshandbuch 15.0 Katalogversion (2023/2026) VII

Vorbemerkung IX

Abkürzungsverzeichnis X

Einleitung 1

1 Ziele 1

2 Hintergrund 2

3 SwissDRG-Klassifikation Version 15.0 Katalogversion (2023/2026) 3

3.1 DRG-Notation 4

3.2 Umgang mit Schweregraden 5

4 Gruppierung von Behandlungsepisoden in DRGs 6

4.1 Variablen für die Gruppierung 6

4.2 Überprüfung demografischer und klinischer Merkmale 6

4.3 MDC-Zuordnung 6

4.4 Prä-MDC-Verarbeitung 7

4.5 MDC-Partitionierung 7

4.6 Zuordnung zu Basis-DRGs 8

4.7 Zuordnung von CCL und PCCL 9

4.8 DRG-Zuordnung 9

4.9 Verschiedene Funktionen mit Einfluss auf die Gruppierung von Behandlungsepisoden 9

4.10 Fehler-DRGs und sonstige DRGs 9

5 Hinweise zur Anwendung des Definitionshandbuches 11

5.1 Anwendung des Handbuches 11

5.2 Symbole und Konventionen 17

6 Besonderheiten der SwissDRG-Version 15.0 Katalogversion (2023/2026) 19

6.1 Gültigkeit von Diagnose- und Prozedurenklassifikationen 19

6.2 Seitenkennzeichen 19

6.3 OR- und NonOR-Prozeduren 20

Prä-MDC Prä-MDC (DRGs A01Z-B61E) 53

MDC 01 Krankheiten und Störungen des Nervensystems (DRGs B01A-B90B) 232

Band 1 (DRGs A01Z-F98D) Fortsetzung

MDC 02 Krankheiten und Störungen des Auges (DRGs C01Z-C86Z) 440

MDC 03 Krankheiten und Störungen des Ohres, der Nase, des Mundes und des Halses (DRGs D01A-D87Z) 482

MDC 04 Krankheiten und Störungen der Atmungsorgane (DRGs E01A-E90C) 609

MDC 05 Krankheiten und Störungen des Kreislaufsystems (DRGs F01A-F98D) 831

Band 2 (DRGs G02A-I98Z)

MDC 06 Krankheiten und Störungen der Verdauungsorgane (DRGs G02A-G87B) 1

MDC 07 Krankheiten und Störungen an hepatobiliärem System und Pankreas (DRGs H01A-H87Z) 342

MDC 08 Krankheiten und Störungen an Muskel-Skelett-System und Bindegewebe (DRGs I02A-I98Z) 440

Band 3 (DRGs J01A-P67D)

MDC 09 Krankheiten und Störungen an Haut, Unterhaut und Mamma (DRGs J01A-J87Z) 1

MDC 10 Endokrine, Ernährungs- und Stoffwechselkrankheiten (DRGs K03Z-K87Z) 167

MDC 11 Krankheiten und Störungen der Harnorgane (DRGs L02Z-L87Z) 237

MDC 12 Krankheiten und Störungen der männlichen Geschlechtsorgane (DRGs M01Z-M86Z) 356

MDC 13 Krankheiten und Störungen der weiblichen Geschlechtsorgane (DRGs N01A-N86B) 408

MDC 14 Schwangerschaft, Geburt und Wochenbett (DRGs O01A-O65D) 484

MDC 15 Neugeborene (DRGs P02A-P67D) 553

Mehrere schwere Probleme beim Neugeborenen 883

Schweres Problem beim Neugeborenen 923

Band 4 (DRGs Q01Z-Z86B)

MDC 16 Krankheiten des Blutes, der blutbildenden Organe und des Immunsystems (DRGs Q01Z-Q86B) 1

Band 4 (DRGs Q01Z-Z86B) Fortsetzung

MDC 17 Hämatologische und solide Neubildungen (DRGs R01A-R65C) 24

MDC 18B Infektiöse und parasitäre Krankheiten (DRGs T01A-T86B) 65

MDC 19 Psychische Krankheiten und Störungen (DRGs U01A-U66D) 107

MDC 20 Alkohol- und Drogengebrauch und alkohol- und drogeninduzierte psychische Störungen (DRGs V01Z-V02D) 131

MDC 21A Polytrauma (DRGs W01A-W61C) 147

MDC 21B Verletzungen, Vergiftungen und toxische Wirkungen von Drogen und Medikamenten (DRGs X01A-X86C) 294

MDC 22 Verbrennungen (DRGs Y02A-Y63Z) 469

MDC 23 Faktoren, die den Gesundheitszustand beeinflussen, und andere Inanspruchnahme des Gesundheitswesens (DRGs Z01Z-Z86B) 503

Globale Funktionen 530

Mehrzeitige_bestimmte OR- Prozeduren 530

OR-Prozeduren ohne Bezug 623

Aufwendige Konstellationen bei BNB 655

Bestimmte OR-Prozeduren 774

Komplexe OR-Prozeduren 869

Komplizierende Prozeduren 900

Dialyse 916

Polytrauma 922

Eingriff an mehreren Lokalisationen 940

Intensivmedizinische Komplexbehandlung > 980 / 1104 Aufwandspunkte 993

Geriatrische Akutrehabilitation, ab 14 BHT 998

Frührehabilitation, ab 14 BHT 1002

Intensivmedizinische Komplexbehandlung > 392 / 552 Aufwandspunkte 1006

Mehrzeitige komplexe OR-Prozeduren 1011

Vierzeitige bestimmte OR-Prozeduren 1042

Komplizierende Prozeduren Prä-MDC 1136

Multiviszeraleingriff 1162

Komplexe Vakuumbehandlung 1169

Hochkomplexe Vakuumbehandlung 1252

Hochaufwendige Konstellationen 1335

Schwerste Verbrennungen 1341

Band 4 (DRGs Q01Z-Z86B) Fortsetzung

Schwere Verbrennungen 1349
Frührehabilitation, ab 7 BHT 1364
Vierzeitige komplexe OR-Prozeduren 1368
Vakuumbehandlung 1399
Geriatrische Akutrehabilitation, ab 7 BHT 1652
Geriatrische Akutrehabilitation, ab 21 BHT 1656

Band 5 Anhänge

Anhang A 1

A Diagnosekode-/MDC-/DRG-Index 1

Anhang B 178

B Prozedurenkode-/MDC-/DRG-Index 178

Globale Prozedurentabellen 745

Funktionsübersicht 746

Eingriff an mehreren Lokalisationen 750

Anhang C 752

C ATC-Kode-/MDC-/DRG-Index 752

Anhang D 755

D CCs, CC-Ausschlüsse, CCL und PCCL-Berechnung 755
D.1 Einleitung 755
D.2 Komplikationen und Komorbiditäten 755
D.3 Komplikations- Komorbiditätslevel (CCL) und patientenbezogene Gesamtschweregrade (PCCL) 756
D.4 Beispiele 761

Anhang E 822

E Plausibilitäten 822
E.1 Einleitung 822
E.2 Demografische Merkmale 822
E.3 Klinische Merkmale 823
E.4 Warnkennzeichen und unumgehbare Fehler 825
E.5 Grouper-Status 825

Glossar 881

Quellenverzeichnis 881

Abbildungs- und Tabellenverzeichnis

Band 1 (DRGs A01Z-F98D)

Abbildung 3.1 SwissDRG-Version 15.0 Katalogversion (2023/2026): Ein Überblick 3

Abbildung 5.1 MDC-Flussdiagramm in Abfragereihenfolge 12

Abbildung 5.2 MDC-Flussdiagramm mit Rangnummern 13

Tabelle 1.1 Liste der SwissDRGs 21

Tabelle 1.2 Gruppen der Erkrankungen und Störungen und zugehörige MDCs 49

Band 5 Anhänge

Abbildung D.1 Verfahren zur PCCL-Berechnung für Nicht-Neugeborene 757

Abbildung D.2 Verfahren zur PCCL-Berechnung für Neugeborene 758

Abbildung D.3 Formel zur Berechnung des patientenbezogenen Gesamtschweregrades (PCCL) 759

Tabelle D.1 Kombination von CCL-Werten zur Ermittlung des PCCL von 1 bis 6 760

Tabelle E.1 Datenelemente und zulässige Werte für demografische Merkmale 822

Tabelle E.2 Zulässige Werte für Diagnosen und Prozeduren 823

Tabelle E.3 Tabellen zur Überprüfung klinischer Merkmale 824

Tabelle E.4 Grouper-Status-Kodes (GST) 825

Tabelle D.5 Unzulässige Hauptdiagnosen 827

Tabelle D.6a Alterskonflikt - Säugling 853

Tabelle D.6b Alterskonflikt - Kleinkind 858

Tabelle D.6c Alterskonflikt - Kind 859

Tabelle D.6d Alterskonflikt - Kinder und Jugendliche 860

Tabelle D.6e Alterskonflikt - Post-neonatal 863

Tabelle D.6f Alterskonflikt - Älter als Säugling 866

Tabelle D.6g Alterskonflikt - Pubertät 869

Tabelle D.6j Alterskonflikt - Erwachsene 870

Tabelle D.6k Alterskonflikt - Reife Erwachsene 879

Anhang A

A Diagnosekode-/MDC-/DRG-Index

Dieser Anhang enthält eine Liste aller Diagnosekodes der ICD-10-GM, die für die Definition von MDCs und DRGs verwendet werden. Dabei kann eine Haupt- oder Nebendiagnose entweder direkt mittels einer „Diagnose in Tabelle“-Abfrage gruppierungsrelevant sein oder innerhalb einer Funktion (z.B. der Funktion „Polytrauma“) verwendet werden. Die Gruppierungsrelevanz von Nebendiagnosen im Rahmen des CCL-Systems spielt für den Anhang A keine Rolle (vergleiche hierzu Anhang D dieses Bandes).

In der einfachsten Form der Auflistung in diesem Anhang sind Kodes nur DRGs einer Basis-DRG und einer MDC zugeordnet. So ist etwa der Diagnosekode R56.0 *Fieberkrämpfe* folgendermassen zugeordnet:

Kode	MDC	DRG
R56.0	01	B75Z

Dies bedeutet, dass es sich bei dem Kode R56.0 um eine Hauptdiagnose handelt, die die medizinische Basis-DRG B75 in der MDC 01 definiert. Wenn ein Datensatz die Hauptdiagnose R56.0 und keine OR-Prozedur aufweist, wird er der DRG B75Z zugeordnet.

In einigen Fällen wird ein Kode DRGs aus zwei oder mehreren Basis-DRGs zugeordnet. Dies kommt vor allem dann vor, wenn die Diagnose für die Festlegung von Schweregrad-Stufen einer operativen Basis-DRG genutzt wird, wenn die Basis-DRG durch Diagnosekodes zusätzlich genauer definiert wird, um einen Datensatz der korrekten von mehreren operativen DRGs zuordnen zu können, oder wenn es sich um MDC 21A handelt und die Diagnose sowohl für die Polytrauma-DRGs wie auch für medizinische DRGs in diesen MDCs verwendet wird.

So dienen etwa Kodes für bösartige Neubildungen wie C34.0 *Bösartige Neubildung: Hauptbronchus* zur Festlegung von Schweregrad-Stufen in einigen Basis-DRGs. In der Liste sind diesem Kode folgende MDCs und DRGs zugeordnet:

Kode	MDC	DRG
C34.0	Prä	A11C
	04	E05B, E71A, E71B, E71C, E86B
	15	MSPNG, SPNG
		AKBB

Dies bedeutet, dass C34.0 eine der Diagnosen ist, die die medizinischen DRGs E71A, E71B und E71C in der MDC 04 definieren, und dass sie auch eine der Diagnosen zur Festlegung des Schweregrad-Splits in der operativen Basis-DRG E05 und in der Basis-DRG A11 in der Prä-MDC ist. Ausserdem wird diese Diagnose in der globalen Funktion Aufwendige Konstellationen bei BNB [AKBB] und in der MDC 15 in den Funktionen Mehrere schwere Probleme beim Neugeborenen [MSPNG] und Schweres Problem beim Neugeborenen [SPNG] verwendet. Eine Auflistung aller Funktionen samt Abkürzungen findet sich am Ende von in diesem Band. Enthält ein Datensatz die Hauptdiagnose C34.0, keine Nebendiagnosen und keine OR-Prozeduren, so wird er der Basis-DRG E71 zugeordnet. Enthält der Datensatz jedoch die Hauptdiagnose C34.0, keine Nebendiagnosen und die OR-Prozedur 34.59.10 *Sonstige Exzision an der Pleura, thorakoskopische Pleurektomie*, wird er aufgrund dieser Prozedur der Basis-

DRG E05 (siehe Anhang B) zugeordnet. Aufgrund der Hauptdiagnose C34.0 (siehe dazu MDC 04 in Band 1) wird – wenn keine äußerst schweren CC vorliegen – der Datensatz der DRG E05B zugeordnet und nicht der DRG E05C.

Ein Beispiel für einen Diagnosekode, der eine operative Basis-DRG näher definiert, ist der Diagnosekode S81.0 *Offene Wunde des Knies*:

Kode	MDC	DRG
S81.0	Prä	A95C
	21A	W61A, W61B, W61C
	21B	X04Z, X60A, X60B, X60C
		PTR

Dies bedeutet: Der Kode S81.0 ist eine der Hauptdiagnosen, die die medizinischen DRGs W61A, W61B und W61C sowie X60A, X60B und X60C in MDC 21A und MDC 21B definieren; gleichzeitig ist er auch eine der Diagnosen, die zur Definition der operativen Basis-DRG X04 dienen. Ein Datensatz mit der Hauptdiagnose S81.0, keiner Nebendiagnose und keiner OR-Prozedur wird er der Basis-DRG X60 zugeordnet. Enthält der Datensatz jedoch die Hauptdiagnose S81.0, keine Nebendiagnose, aber die OR-Prozedur 80.86.11 *Débridement am Kniegelenk*, wird er aufgrund dieser Prozedur der DRG X04Z anstelle der Basis-DRG X60 zugeordnet. Ausserdem wird der Diagnosekode S81.0 innerhalb der Funktion Polytrauma [PTR] verwendet.

Die Zuordnung bei *Polytrauma* ist schwieriger als bei anderen MDC-Zuordnungen. Ein Beispiel bildet ein Patient mit der Hauptdiagnose S82.0 *Fraktur der Patella* und den Nebendiagnosen S37.01 *Prellung und Hämatom der Niere*, S36.83 *Verletzung: Retroperitoneum*, S83.6 *Verstauchung und Zerrung sonstiger und nicht näher bezeichneter Teile des Knies* und S22.42 *Rippenserienfraktur: Mit Beteiligung von zwei Rippen*. Der Diagnosekode S82.0 weist folgende Zuordnungen auf:

Kode	MDC	DRG
S82.0	Prä	A95C
	08	I77A, I77B
	21A	W61A, W61B, W61C
		PTR

Aus den Listen für Polytrauma in den DRG-Definitionen der Funktion [Polytrauma](Band 4) geht hervor, dass der Kode S37.01 als signifikantes Nierentrauma und der Kode S36.83 als signifikantes Trauma des Beckens und der Lendenwirbelsäule aufgelistet ist. Das bedeutet, dass dieser Datensatz der Polytrauma-Basis-DRG W61 in MDC 21A anstelle einer Basis-DRG in MDC 08 zugeordnet wird.

ICD	MDC	DRG
A00.0	Prä	A11C
	06	G67A G67B G67C G67D
A00.1	Prä	A11C
	06	G67A G67B G67C G67D
A00.9	Prä	A11C
	06	G67A G67B G67C G67D
A01.0		KP KPP
	05	F62A
	15	MSPNG SPNG
	17	R50A R60A R60B R60C R60D R62A R62B R63A R63B R63C R63D
	18B	T01C T60A T60B T60C T60D T60E T60F T60G T61A T86A
	Prä	A11C A93A A97A A97B A97C A97D
A01.1		KP KPP
	05	F62A
	15	MSPNG SPNG
	17	R50A R60A R60B R60C R60D R62A R62B R63A R63B R63C R63D
	18B	T01C T60A T60B T60C T60D T60E T60F T60G T61A T86A
	Prä	A11C A93A A97A A97B A97C A97D
A01.2		KP KPP
	05	F62A
	15	MSPNG SPNG
	17	R50A R60A R60B R60C R60D R62A R62B R63A R63B R63C R63D
	18B	T01C T60A T60B T60C T60D T60E T60F T60G T61A T86A
	Prä	A11C A93A A97A A97B A97C A97D
A01.3		KP KPP
	05	F62A
	15	MSPNG SPNG
	17	R50A R60A R60B R60C R60D R62A R62B R63A R63B R63C R63D
	18B	T01C T60A T60B T60C T60D T60E T60F T60G T61A T86A
	Prä	A11C A93A A97A A97B A97C A97D
A01.4	15	MSPNG SPNG
	18B	T64A T64B T64C
	Prä	A11C
A02.0	06	G67A G67B G67C G67D
	15	MSPNG SPNG
A02.1		KP KPP
	05	F62A
	07	H63A
	15	MSPNG SPNG
	17	R50A R60A R60B R60C R60D R61D R62A R62B R63A R63B R63C R63D
	18B	T01C T60A T60B T60C T60D T60E T60F T60G T61A T86A
	Prä	A11A A11B A11C A11D A93A A97A A97B A97C A97D
A02.2	15	MSPNG SPNG
	18B	T64A T64B T64C
A02.8	15	MSPNG SPNG
	18B	T64A T64B T64C
A02.9	15	MSPNG SPNG
	18B	T64A T64B T64C
A03.0	06	G67A G67B G67C G67D
	15	MSPNG SPNG
A03.1	06	G67A G67B G67C G67D
	15	MSPNG SPNG
A03.2	06	G67A G67B G67C G67D
	15	MSPNG SPNG
A03.3	06	G67A G67B G67C G67D
	15	MSPNG SPNG
A03.8	06	G67A G67B G67C G67D
	15	MSPNG SPNG
A03.9	06	G67A G67B G67C G67D
	15	MSPNG SPNG
A04.0	06	G67A G67B G67C G67D
	15	MSPNG SPNG
A04.1	06	G67A G67B G67C G67D
	15	MSPNG SPNG
A04.2	06	G67A G67B G67C G67D
	15	MSPNG SPNG
A04.3	06	G46C G67A G67B G67C G67D
	15	MSPNG SPNG
	Prä	A11C
A04.4	06	G46C G67A G67B G67C G67D
	15	MSPNG SPNG
A04.5	06	G46C G67A G67B G67C G67D
	15	MSPNG SPNG
	Prä	A11C
A04.6	06	G46C G67A G67B G67C G67D
	15	MSPNG SPNG
	Prä	A11C
A04.8	06	G67A G67B G67C G67D
	15	MSPNG SPNG
A04.9	06	G67A G67B G67C G67D
A04.70	06	G46C G67A G67B G67C G86A
	15	MSPNG SPNG
	Prä	A11C
A04.71	06	G46C G67A G67B G67C G86A
	15	MSPNG SPNG
	Prä	A11C
A04.72	06	G46C G67A G67B G67C G86A
	15	MSPNG SPNG
	Prä	A11C
A04.73	06	G46C G67A G67B G67C G86A
	15	MSPNG SPNG
	Prä	A11C
A04.79	06	G46C G67A G67B G67C G86A
	15	MSPNG SPNG
	Prä	A11C
A05.0	06	G67A G67B G67C G67D
	15	MSPNG SPNG
A05.1	15	MSPNG SPNG
	18B	T64A T64B T64C
	Prä	A11C
A05.2	06	G67A G67B G67C G67D
	15	MSPNG SPNG
A05.3	06	G67A G67B G67C G67D
	15	MSPNG SPNG
A05.4	06	G67A G67B G67C G67D
A05.8	06	G67A G67B G67C G67D
A05.9	06	G67A G67B G67C G67D
A06.0	Prä	A11C
	06	G67A G67B G67C G67D
A06.1	Prä	A11C
	06	G67A G67B G67C G67D
A06.2	Prä	A11C
	06	G67A G67B G67C G67D
A06.3	Prä	A11C
	18B	T64A T64B T64C
A06.4	Prä	A11C
	07	H63A H63B H63C H63D
A06.5	Prä	A11C
	04	E77A E77B
A06.6	Prä	A11C
	01	B72A B72B
A06.7	Prä	A11C
	09	J61A J61B J61C J61D
A06.8	Prä	A11C
	18B	T64A T64B T64C
A06.9	Prä	A11C
	18B	T64A T64B T64C
A07.0	Prä	A11C
	06	G67A G67B G67C G67D
A07.1	Prä	A11C
	06	G67A G67B G67C G67D
A07.2	Prä	A11C
	06	G67A G67B G67C G67D

DIAG

ICD	MDC	DRG
A07.3	Prä	A11C
	06	G67A G67B G67C G67D
A07.8	Prä	A11C
	06	G67A G67B G67C G67D
A07.9	Prä	A11C
	06	G67A G67B G67C G67D
A08.0	06	G67A G67B G67C G67D
	15	P65B P66B P66C P67A P67B P67C
A08.1	06	G67A G67B G67C G67D
	15	MSPNG SPNG
A08.2	06	G67A G67B G67C G67D
	15	P65B P66B P66C P67A P67B P67C
A08.3	06	G67A G67B G67C G67D
	15	P65B P66B P66C P67A P67B P67C
A08.4	06	G67A G67B G67C G67D
	15	P65B P66B P66C P67A P67B P67C
A08.5	06	G67A G67B G67C G67D
	15	MSPNG SPNG
A09.0	06	G67A G67B G67C G67D
	15	MSPNG SPNG
A09.9	06	G67A G67B G67C G67D
	15	P65B P66B P66C P67A P67B P67C
A15.0	04	E76A E76B E76C E76D
	15	MSPNG SPNG
	Prä	A11C
A15.1	04	E76A E76B E76C E76D
	15	MSPNG SPNG
	Prä	A11C
A15.2	04	E76A E76B E76C E76D
	15	MSPNG SPNG
	Prä	A11C
A15.3	04	E76A E76B E76C E76D
	15	MSPNG SPNG
	Prä	A11C
A15.4	Prä	A11C
	04	E76A E76B E76C E76D
A15.5	Prä	A11C
	04	E76A E76B E76C E76D
A15.6	Prä	A11C
	04	E76A E76B E76C E76D
A15.7	04	E76A E76B E76C E76D
	15	MSPNG SPNG
	Prä	A11C
A15.8	Prä	A11C
	04	E76A E76B E76C E76D
A15.9	04	E76A E76B E76C E76D
	15	MSPNG SPNG
	Prä	A11C
A16.0	04	E76A E76B E76C E76D
	15	MSPNG SPNG
	Prä	A11C
A16.1	04	E76A E76B E76C E76D
	15	MSPNG SPNG
	Prä	A11C
A16.2	04	E76A E76B E76C E76D
	15	MSPNG SPNG
	Prä	A11C
A16.3	Prä	A11C
	04	E76A E76B E76C E76D
A16.4	Prä	A11C
	04	E76A E76B E76C E76D
A16.5	Prä	A11C
	04	E76A E76B E76C E76D
A16.7	04	E76A E76B E76C E76D
	15	MSPNG SPNG
	Prä	A11C
A16.8	Prä	A11C
	04	E76A E76B E76C E76D
A16.9	04	E76A E76B E76C E76D
	15	MSPNG SPNG
	Prä	A11C
A17.0	01	B72A B72B
	15	MSPNG SPNG
	Prä	A11C
A17.1	01	B72A B72B
	15	MSPNG SPNG
	Prä	A11C
A17.8	01	B72A B72B
	15	MSPNG SPNG
	Prä	A11C
A17.9	01	B72A B72B
	15	MSPNG SPNG
	Prä	A11C
A18.0	Prä	A11C B61B B61C B61D
	08	I02A I02B I02C I08A I08B I12A I12B I12C I13A I13B I64A I64B
A18.1	Prä	A11C
	11	L63A L63B L63C L63D
A18.2	Prä	A11C
	04	E76A E76B E76C E76D
A18.3	Prä	A11C
	06	G71A G71B
A18.4	Prä	A11C
	09	J02A J02B J08Z J61A J61B
A18.5	02	C60A C60B
	15	MSPNG SPNG
	Prä	A11C
A18.6	Prä	A11C
	03	D66A D66B
A18.7	Prä	A11C
	10	K09A K09B K64A K64B K64C
A18.8	Prä	A11C
	04	E76A E76B E76C E76D
A19.0		KP KPP
	04	E76A E76B E76C E76D
	05	F62A
	17	R50A R60A R60B R60C R60D R62A R62B R63A R63B R63C R63D
	Prä	A11C A93A A97A A97B A97C A97D
A19.1		KP KPP
	04	E76A E76B E76C E76D
	05	F62A
	17	R50A R60A R60B R60C R60D R62A R62B R63A R63B R63C R63D
	Prä	A11C A93A A97A A97B A97C A97D
A19.2		KP KPP
	04	E76A E76B E76C E76D
	05	F62A
	17	R50A R60A R60B R60C R60D R62A R62B R63A R63B R63C R63D
	Prä	A11C A93A A97A A97B A97C A97D
A19.8		KP KPP
	04	E76A E76B E76C E76D
	05	F62A
	17	R50A R60A R60B R60C R60D R62A R62B R63A R63B R63C R63D
	Prä	A11C A93A A97A A97B A97C A97D
A19.9	Prä	A11C A93A A97A A97B A97C A97D
	04	E76A E76B E76C E76D
	05	F62A
	17	R50A R60A R60B R60C R60D R62A R62B R63A R63B R63C R63D
A20.0	Prä	A11C
	18B	T64A T64B T64C
A20.1	Prä	A11C
	18B	T64A T64B T64C
A20.2	Prä	A11C
	04	E77A E77B
A20.3	Prä	A11C
	01	B72A B72B
A20.7		KP KPP
	05	F62A
	07	H63A
	17	R50A R60A R60B R60C R60D R61D R62A R62B R63A R63B R63C R63D

ICD	MDC	DRG
	18B	T01C T60A T60B T60C T60D T60E T60F T60G T61A T86A
	Prä	A11A A11B A11C A11D A93A A97A A97B A97C A97D
A20.8	Prä	A11C
	18B	T64A T64B T64C
A20.9	Prä	A11C
	18B	T64A T64B T64C
A21.0	Prä	A11C
	18B	T64A T64B T64C
A21.1	Prä	A11C
	18B	T64A T64B T64C
A21.2	Prä	A11C
	04	E77A E77B
A21.3	Prä	A11C
	06	G71A G71B
A21.7		KP KPP
	05	F62A
	17	R50A R60A R60B R60C R60D R62A R62B R63A R63B R63C R63D
	18B	T01C T60A T60B T60C T60D T60E T60F T60G T61A T86A
	Prä	A11C A93A A97A A97B A97C A97D
A21.8	Prä	A11C
	18B	T64A T64B T64C
A21.9	Prä	A11C
	18B	T64A T64B T64C
A22.0	Prä	A11C
	09	J02A J02B J08Z J61A J61B
A22.1	Prä	A11C
	04	E77A E77B
A22.2	Prä	A11C
	06	G71A G71B
A22.7		KP KPP
	05	F62A
	07	H63A
	17	R50A R60A R60B R60C R60D R61D R62A R62B R63A R63B R63C R63D
	18B	T01C T60A T60B T60C T60D T60E T60F T60G T61A T86A
	Prä	A11A A11B A11C A11D A93A A97A A97B A97C A97D
A22.8	Prä	A11C
	18B	T64A T64B T64C
A22.9	Prä	A11C
	18B	T64A T64B T64C
A23.0	Prä	A11C
	18B	T64A T64B T64C
A23.1	Prä	A11C
	18B	T64A T64B T64C
A23.2	Prä	A11C
	18B	T64A T64B T64C
A23.3	Prä	A11C
	18B	T64A T64B T64C
A23.8	Prä	A11C
	18B	T64A T64B T64C
A23.9	Prä	A11C
	18B	T64A T64B T64C
A24.0		KP KPP
	05	F62A
	17	R50A R60A R60B R60C R60D R62A R62B R63A R63B R63C R63D
	18B	T01C T60A T60B T60C T60D T60E T60F T60G T61A T86A
	Prä	A11C A93A A97A A97B A97C A97D
A24.1		KP KPP
	05	F62A
	17	R50A R60A R60B R60C R60D R62A R62B R63A R63B R63C R63D
	18B	T01C T60A T60B T60C T60D T60E T60F T60G T61A T86A
	Prä	A11C A93A A97A A97B A97C A97D
A24.2	Prä	A11C
	18B	T64A T64B T64C
A24.3	Prä	A11C
	18B	T64A T64B T64C
A24.4	Prä	A11C
	18B	T64A T64B T64C
A25.0	Prä	A11C
	18B	T64A T64B T64C
A25.1	Prä	A11C
	18B	T64A T64B T64C
A25.9	Prä	A11C
	18B	T64A T64B T64C
A26.0	15	MSPNG SPNG
	18B	T64A T64B T64C
	Prä	A11C
A26.7		KP KPP
	05	F62A
	07	H63A
	15	MSPNG SPNG
	17	R50A R60A R60B R60C R60D R61D R62A R62B R63A R63B R63C R63D
	18B	T01C T60A T60B T60C T60D T60E T60F T60G T61A T86A
	Prä	A11A A11B A11C A11D A93A A97A A97B A97C A97D
A26.8	15	MSPNG SPNG
	18B	T64A T64B T64C
	Prä	A11C
A26.9	15	MSPNG SPNG
	18B	T64A T64B T64C
	Prä	A11C
A27.0		KP KPP
	05	F62A
	15	MSPNG SPNG
	17	R50A R60A R60B R60C R60D R62A R62B R63A R63B R63C R63D
	18B	T01C T60A T60B T60C T60D T60E T60F T60G T61A T86A
	Prä	A11C A93A A97A A97B A97C A97D
A27.8	01	B72A B72B
	15	MSPNG SPNG
	Prä	A11C
A27.9	15	MSPNG SPNG
	18B	T64A T64B T64C
	Prä	A11C
A28.0	15	MSPNG SPNG
	18B	T64A T64B T64C
	Prä	A11C
A28.1	15	MSPNG SPNG
	16	Q60A Q60B Q60C
	Prä	A11C
A28.2	15	MSPNG SPNG
	18B	T64A T64B T64C
	Prä	A11C
A28.8	15	MSPNG SPNG
	18B	T64A T64B T64C
	Prä	A11C
A28.9	15	MSPNG SPNG
	18B	T64A T64B T64C
	Prä	A11C
A30.0	Prä	A11C
	18B	T64A T64B T64C
A30.1	Prä	A11C
	18B	T64A T64B T64C
A30.2	Prä	A11C
	18B	T64A T64B T64C
A30.3	Prä	A11C
	18B	T64A T64B T64C
A30.4	Prä	A11C
	18B	T64A T64B T64C
A30.5	Prä	A11C
	18B	T64A T64B T64C
A30.8	Prä	A11C
	18B	T64A T64B T64C
A30.9	Prä	A11C
	18B	T64A T64B T64C
A31.0	Prä	A11C
	04	E76A E76B E76C E76D
A31.1	Prä	A11C
	09	J02A J02B J08Z J61A J61B
A31.9	Prä	A11C
	18B	T64A T64B T64C
A31.80	Prä	A11C
	18B	T64A T64B T64C
A31.88	Prä	A11C
	18B	T64A T64B T64C
A32.0	15	MSPNG SPNG
	18B	T64A T64B T64C
	Prä	A11C
A32.1	01	B72A B72B
	15	MSPNG SPNG
	Prä	A11C
A32.7		KP KPP
	05	F62A
	07	H63A
	15	MSPNG SPNG
	17	R50A R60A R60B R60C R60D R61D R62A R62B R63A R63B R63C R63D
	18B	T01C T60A T60B T60C T60D T60E

DIAG

ICD	MDC	DRG
		T60F T60G T61A
		T86A
	Prä	A11A A11B A11C
		A11D A93A A97A
		A97B A97C A97D
A32.8	15	MSPNG SPNG
	18B	T64A T64B T64C
	Prä	A11C
A32.9	15	MSPNG SPNG
	18B	T64A T64B T64C
	Prä	A11C
A33	15	MSPNG SPNG
	Prä	963Z A11C
A34	Prä	A11C
	14	O04Z O61Z
A35	15	MSPNG SPNG
	18B	T64A T64B T64C
	Prä	A11C
A36.0	Prä	A11C
	03	D66A D66B
A36.1	Prä	A11C
	03	D66A D66B
A36.2	Prä	A11C
	03	D66A D66B
A36.3	Prä	A11C
	09	J61A J61B J61C
		J61D
A36.8	Prä	A11C
	18B	T64A T64B T64C
A36.9	Prä	A11C
	18B	T64A T64B T64C
A37.0	04	E70A E70B E70C
	15	MSPNG SPNG
	Prä	A11C
A37.1	04	E70A E70B E70C
	15	MSPNG SPNG
	Prä	A11C
A37.8	04	E70A E70B E70C
	15	MSPNG SPNG
	Prä	A11C
A37.9	04	E70A E70B E70C
	15	MSPNG SPNG
	Prä	A11C
A38	Prä	A11C
	18B	T64A T64B T64C
A39.0	01	B72A B72B
	15	MSPNG SPNG
	Prä	A11C
A39.1		KP KPP
	05	F62A
	07	H63A
	15	MSPNG SPNG
	17	R50A R60A R60B
		R60C R60D R61D
		R62A R62B R63A
		R63B R63C R63D
	18B	T01C T60A T60B
		T60C T60D T60E
		T60F T60G T61A
		T86A
	Prä	A11A A11B A11C
		A11D A93A A97A
		A97B A97C A97D
A39.2		KP KPP
	05	F62A
	07	H63A
	15	MSPNG SPNG
	17	R50A R60A R60B
		R60C R60D R61D
		R62A R62B R63A
		R63B R63C R63D
	18B	T01C T60A T60B
		T60C T60D T60E
		T60F T60G T61A
		T86A
	Prä	A11A A11B A11C
		A11D A93A A97A
		A97B A97C A97D
A39.3		KP KPP
	05	F62A
	07	H63A
	15	MSPNG SPNG
	17	R50A R60A R60B
		R60C R60D R61D
		R62A R62B R63A
		R63B R63C R63D
	18B	T01C T60A T60B
		T60C T60D T60E
		T60F T60G T61A
		T86A
	Prä	A11A A11B A11C
		A11D A93A A97A
		A97B A97C A97D
A39.4		KP KPP
	05	F62A
	07	H63A
	15	MSPNG SPNG
	17	R50A R60A R60B
		R60C R60D R61D
		R62A R62B R63A
		R63B R63C R63D
	18B	T01C T60A T60B
		T60C T60D T60E
		T60F T60G T61A
		T86A
	Prä	A11A A11B A11C
		A11D A93A A97A
		A97B A97C A97D
A39.5	05	F75A F75B F75C
		F75D
	15	MSPNG SPNG
	Prä	A11C
A39.8		KP KPP
	05	F62A
	17	R50A R60A R60B
		R60C R60D R62A
		R62B R63A R63B
		R63C R63D
	18B	T01C T60A T60B
		T60C T60D T60E
		T60F T60G T61A
		T86A
	Prä	A11C A93A A97A
		A97B A97C A97D
A39.9	Prä	A11C A93A A97A
		A97B A97C A97D
	05	F62A
	17	R50A R60A R60B
		R60C R60D R62A
		R62B R63A R63B
		R63C R63D
	18B	T01C T60A T60B
		T60C T60D T60E
		T60F T60G T61A
		T86A
A40.0		KP KPP SVB
	05	F62A
	07	H63A
	15	MSPNG SPNG
	17	R50A R60A R60B
		R60C R60D R61D
		R62A R62B R63A
		R63B R63C R63D
	18B	T01C T60A T60B
		T60C T60D T60E
		T60F T60G T61A
		T86A
	Prä	A11A A11B A11C
		A11D A93A A97A
		A97B A97C A97D
A40.1		KP KPP SVB
	05	F62A
	07	H63A
	15	MSPNG SPNG
	17	R50A R60A R60B
		R60C R60D R61D
		R62A R62B R63A
		R63B R63C R63D
	18B	T01C T60A T60B
		T60C T60D T60E
		T60F T60G T61A
		T86A
	Prä	A11A A11B A11C
		A11D A93A A97A
		A97B A97C A97D
A40.2		KP KPP SVB
	05	F62A
	07	H63A
	15	MSPNG SPNG
	17	R50A R60A R60B
		R60C R60D R61D
		R62A R62B R63A
		R63B R63C R63D
	18B	T01C T60A T60B
		T60C T60D T60E
		T60F T60G T61A
		T86A
	Prä	A11A A11B A11C
		A11D A93A A97A
		A97B A97C A97D
A40.3		KP KPP SVB
	05	F62A
	07	H63A
	15	MSPNG SPNG
	17	R50A R60A R60B
		R60C R60D R61D
		R62A R62B R63A
		R63B R63C R63D
	18B	T01C T60A T60B
		T60C T60D T60E
		T60F T60G T61A
		T86A
	Prä	A11A A11B A11C
		A11D A93A A97A
		A97B A97C A97D
A40.8		KP KPP SVB
	05	F62A
	07	H63A
	15	MSPNG SPNG
	17	R50A R60A R60B
		R60C R60D R61D
		R62A R62B R63A
		R63B R63C R63D
	18B	T01C T60A T60B
		T60C T60D T60E
		T60F T60G T61A
		T86A
	Prä	A11A A11B A11C
		A11D A93A A97A
		A97B A97C A97D

ICD	MDC	DRG
A40.9		SVB
	05	F62A
	15	MSPNG SPNG
	17	R50A R60A R60B
		R60C R60D R62A
		R62B R63A R63B
		R63C R63D
	18B	T01C T60A T60B
		T60C T60D T60E
		T60F T60G T61A
		T86A
	Prä	A11C A93A A97A
		A97B A97C A97D
A41.0		KP KPP SVB
	05	F62A
	07	H63A
	11	L20C
	15	MSPNG SPNG
	17	R50A R60A R60B
		R60C R60D R61D
		R62A R62B R63A
		R63B R63C R63D
	18B	T01C T60A T60B
		T60C T60D T60E
		T60F T60G T61A
		T86A
	Prä	A11A A11B A11C
		A11D A93A A97A
		A97B A97C A97D
A41.1		KP KPP SVB
	05	F62A
	07	H63A
	11	L20C
	15	MSPNG SPNG
	17	R50A R60A R60B
		R60C R60D R61D
		R62A R62B R63A
		R63B R63C R63D
	18B	T01C T60A T60B
		T60C T60D T60E
		T60F T60G T61A
		T86A
	Prä	A11A A11B A11C
		A11D A93A A97A
		A97B A97C A97D
A41.2		KP KPP SVB
	05	F62A
	07	H63A
	11	L20C
	15	MSPNG SPNG
	17	R50A R60A R60B
		R60C R60D R61D
		R62A R62B R63A
		R63B R63C R63D
	18B	T01C T60A T60B
		T60C T60D T60E
		T60F T60G T61A
		T86A
	Prä	A11A A11B A11C
		A11D A93A A97A
		A97B A97C A97D
A41.3		KP KPP SVB
	05	F62A
	07	H63A
	11	L20C
	15	MSPNG SPNG
	17	R50A R60A R60B
		R60C R60D R61D
		R62A R62B R63A
		R63B R63C R63D
	18B	T01C T60A T60B
		T60C T60D T60E
		T60F T60G T61A
		T86A
	Prä	A11A A11B A11C
		A11D A93A A97A
		A97B A97C A97D
A41.4		KP KPP SVB
	05	F62A
	07	H63A
	11	L20C
	15	MSPNG SPNG
	17	R50A R60A R60B
		R60C R60D R61D
		R62A R62B R63A
		R63B R63C R63D
	18B	T01C T60A T60B
		T60C T60D T60E
		T60F T60G T61A
		T86A
	Prä	A11A A11B A11C
		A11D A93A A97A
		A97B A97C A97D
A41.8		KP KPP SVB
	05	F62A
	07	H63A
	11	L20C
	15	MSPNG SPNG
	17	R50A R60A R60B
		R60C R60D R61D
		R62A R62B R63A
		R63B R63C R63D
	18B	T01C T60A T60B
		T60C T60D T60E
		T60F T60G T61A
		T86A
	Prä	A11A A11B A11C
		A11D A93A A97A
		A97B A97C A97D
A41.9	15	P65B P66B P66C
		P67A P67B P67C
	18B	T01C T60A T60B
		T60C T60D T60E
		T60F T60G T86A
A41.51		KP KPP SVB
	05	F62A
	07	H63A
	11	L20C
	15	MSPNG SPNG
	17	R50A R60A R60B
		R60C R60D R61D
		R62A R62B R63A
		R63B R63C R63D
	18B	T01C T60A T60B
		T60C T60D T60E
		T60F T60G T61A
		T86A
	Prä	A11A A11B A11C
		A11D A93A A97A
		A97B A97C A97D
A41.52		KP KPP SVB
	05	F62A
	07	H63A
	11	L20C
	15	MSPNG SPNG
	17	R50A R60A R60B
		R60C R60D R61D
		R62A R62B R63A
		R63B R63C R63D
	18B	T01C T60A T60B
		T60C T60D T60E
		T60F T60G T61A
		T86A
	Prä	A11A A11B A11C
		A11D A93A A97A
		A97B A97C A97D
A41.58		KP KPP SVB
	05	F62A
	07	H63A
	11	L20C
	15	MSPNG SPNG
	17	R50A R60A R60B
		R60C R60D R61D
		R62A R62B R63A
		R63B R63C R63D
	18B	T01C T60A T60B
		T60C T60D T60E
		T60F T60G T61A
		T86A
	Prä	A11A A11B A11C
		A11D A93A A97A
		A97B A97C A97D
A42.0	Prä	A11C
	04	E77A E77B
A42.1	Prä	A11C
	06	G71A G71B
A42.2	Prä	A11C
	09	J02A J02B J08Z
		J61A J61B
A42.7		KP KPP
	05	F62A
	07	H63A
	17	R50A R60A R60B
		R60C R60D R61D
		R62A R62B R63A
		R63B R63C R63D
	18B	T01C T60A T60B
		T60C T60D T60E
		T60F T60G T61A
		T86A
	Prä	A11A A11B A11C
		A11D A93A A97A
		A97B A97C A97D
A42.8	Prä	A11C
	18B	T64A T64B T64C
A42.9	Prä	A11C
	18B	T64A T64B T64C
A43.0	Prä	A11C
	04	E76A E76B E76C
		E76D
A43.1	Prä	A11C
	09	J02A J02B J08Z
		J61A J61B
A43.8	Prä	A11C
	18B	T64A T64B T64C
A43.9	Prä	A11C
	18B	T64A T64B T64C
A44.0		KP KPP
	05	F62A
	17	R50A R60A R60B
		R60C R60D R62A
		R62B R63A R63B
		R63C R63D
	18B	T01C T60A T60B
		T60C T60D T60E
		T60F T60G T61A
		T86A
	Prä	A11C A93A A97A
		A97B A97C A97D
A44.1	Prä	A11C

DIAG

ICD	MDC	DRG
	18B	T64A T64B T64C
A44.8	Prä	A11C
	18B	T64A T64B T64C
A44.9	Prä	A11C
	18B	T64A T64B T64C
A46	09	J11A J64A J64B
		J64C J64D
	15	MSPNG SPNG
	Prä	A11C
A48.0		KP KPP
	05	F62A
	15	MSPNG SPNG
	17	R50A R60A R60B
		R60C R60D R62A
		R62B R63A R63B
		R63C R63D
	18B	T01C T60A T60B
		T60C T60D T60E
		T60F T60G T61A
		T86A
	Prä	A11C A93A A97A
		A97B A97C A97D
A48.1	04	E77A E77B
	15	MSPNG SPNG
	Prä	A11C
A48.2	04	E77A E77B E77C
	15	MSPNG SPNG
	Prä	A11C
A48.3		KP KPP
	05	F62A
	17	R50A R60A R60B
		R60C R60D R62A
		R62B R63A R63B
		R63C R63D
	18B	T01C T60A T60B
		T60C T60D T60E
		T60F T60G T61A
		T86A
	Prä	A11C A93A A97A
		A97B A97C A97D
A48.4	Prä	A11C
	18B	T64A T64B T64C
A48.8	18B	T64A T64B T64C
A49.0	18B	T64A T64B T64C
A49.1	15	P65B P66B P66C
		P67A P67B P67C
	18B	T64A T64B T64C
A49.2	18B	T64A T64B T64C
A49.3	18B	T64A T64B T64C
A49.8	18B	T64A T64B T64C
A49.9	18B	T64A T64B T64C
A50.0	15	MSPNG SPNG
	18B	T64A T64B T64C
A50.1	15	MSPNG SPNG
	18B	T64A T64B T64C
A50.2	15	MSPNG SPNG
	18B	T64A T64B T64C
A50.3	02	C60A C60B
	15	MSPNG SPNG
A50.4	01	B72A B72B
	15	MSPNG SPNG
A50.5	18B	T64A T64B T64C
A50.6	18B	T64A T64B T64C
A50.7	18B	T64A T64B T64C
A50.9	18B	T64A T64B T64C
A51.0	12	M62A M62B
	13	N61Z
A51.1	06	G71A G71B
A51.2	18B	T64A T64B T64C
A51.3	09	J61A J61B J61C

ICD	MDC	DRG
		J61D
A51.4	18B	T64A T64B T64C
A51.5	18B	T64A T64B T64C
A51.9	18B	T64A T64B T64C
A52.0	05	F75A F75B F75C
		F75D
A52.1	01	B72A B72B
A52.2	01	B72A B72B
A52.3	01	B81A B81B B81C
A52.7	18B	T64A T64B T64C
A52.8	18B	T64A T64B T64C
A52.9	18B	T64A T64B T64C
A53.0	18B	T64A T64B T64C
A53.9	18B	T64A T64B T64C
A54.0	12	M62A M62B
	13	N61Z
A54.1	12	M62A M62B
	13	N61Z
A54.2	12	M62A M62B
	13	N61Z
A54.3	02	C60A C60B
A54.4	08	I02A I02B I02C
		I08A I08B I13A
		I13B I76A I76B
A54.5	03	D62A D62B D62C
A54.6	06	G71A G71B
A54.8	18B	T64A T64B T64C
A54.9	18B	T64A T64B T64C
A55	12	M62A M62B
	13	N61Z
A56.0	12	M62A M62B
	13	N61Z
A56.1	12	M62A M62B
	13	N61Z
A56.2	12	M62A M62B
	13	N61Z
A56.3	06	G71A G71B
A56.4	03	D62A D62B D62C
A56.8	12	M62A M62B
	13	N61Z
A57	12	M62A M62B
	13	N61Z
A58	12	M62A M62B
	13	N61Z
A59.0	12	M62A M62B
	13	N61Z
A59.8	18B	T64A T64B T64C
A59.9	18B	T64A T64B T64C
A60.0	12	M62A M62B
	13	N61Z
A60.1	12	M62A M62B
	13	N61Z
A60.9	12	M62A M62B
	13	N61Z
A63.0	Prä	961Z
A63.8	12	M62A M62B
	13	N61Z
A64	12	M62A M62B
	13	N61Z
A65	18B	T64A T64B T64C
A66.0	09	J67Z
A66.1	09	J67Z
A66.2	09	J61A J61B J61C
		J61D
A66.3	09	J61A J61B J61C
		J61D
A66.4	09	J61A J61B J61C
		J61D
A66.5	03	D66A D66B
A66.6	08	I02A I02B I02C

ICD	MDC	DRG
		I08A I08B I13A
		I13B I76A I76B
A66.7	18B	T64A T64B T64C
A66.8	18B	T64A T64B T64C
A66.9	18B	T64A T64B T64C
A67.0	09	J67Z
A67.1	09	J67Z
A67.2	18B	T64A T64B T64C
A67.3	09	J67Z
A67.9	18B	T64A T64B T64C
A68.0	18B	T64A T64B T64C
A68.1	18B	T64A T64B T64C
A68.9	18B	T64A T64B T64C
A69.0	03	D62A D62B D62C
A69.1	03	D62A D62B D62C
A69.2	18B	T64A T64B T64C
A69.8	18B	T64A T64B T64C
A69.9	18B	T64A T64B T64C
A70	04	E77A E77B E77C
A71.0	02	C60A C60B
A71.1	02	C60A C60B
	15	MSPNG SPNG
A71.9	02	C60A C60B
A74.0	02	C63A C63B C63C
A74.8	15	MSPNG SPNG
	18B	T63A T63B
A74.9	18B	T63A T63B
A75.0	Prä	A11C
	18B	T64A T64B T64C
A75.1	Prä	A11C
	18B	T64A T64B T64C
A75.2	Prä	A11C
	18B	T64A T64B T64C
A75.3	Prä	A11C
	18B	T64A T64B T64C
A75.9	Prä	A11C
	18B	T64A T64B T64C
A77.0	Prä	A11C
	18B	T64A T64B T64C
A77.1	Prä	A11C
	18B	T64A T64B T64C
A77.2	Prä	A11C
	18B	T64A T64B T64C
A77.3	Prä	A11C
	18B	T64A T64B T64C
A77.8	Prä	A11C
	18B	T64A T64B T64C
A77.9	Prä	A11C
	18B	T64A T64B T64C
A78		KP KPP
	05	F62A
	17	R50A R60A R60B
		R60C R60D R62A
		R62B R63A R63B
		R63C R63D
	18B	T01C T60A T60B
		T60C T60D T60E
		T60F T60G T61A
		T86A
	Prä	A11C A93A A97A
		A97B A97C A97D
A79.0	Prä	A11C
	18B	T64A T64B T64C
A79.1	Prä	A11C
	18B	T64A T64B T64C
A79.8	Prä	A11C
	18B	T64A T64B T64C
A79.9	Prä	A11C
	18B	T64A T64B T64C
A80.0	Prä	A11C

ICD	MDC	DRG
	01	B72A B72B
A80.1	Prä	A11C
	01	B72A B72B
A80.2	Prä	A11C
	01	B72A B72B
A80.3	Prä	A11C
	01	B72A B72B
A80.4	Prä	A11C
	18B	T63A T63B
A80.9	Prä	A11C
	01	B81A B81B B81C
A81.0	Prä	A11C
	01	B85A
A81.1	01	B85A
	15	MSPNG SPNG
	Prä	A11C
A81.2	Prä	A11C
	01	B85A B85B
A81.8	Prä	A11C
	01	B81A B81B B81C
A81.9	Prä	A11C
	01	B81A B81B B81C
A82.0	Prä	A11C
	01	B72A B72B
A82.1	Prä	A11C
	01	B72A B72B
A82.9	Prä	A11C
	01	B72A B72B
A83.0	Prä	A11C
	01	B72A B72B
A83.1	Prä	A11C
	01	B72A B72B
A83.2	Prä	A11C
	01	B72A B72B
A83.3	Prä	A11C
	01	B72A B72B
A83.4	Prä	A11C
	01	B72A B72B
A83.5	Prä	A11C
	01	B72A B72B
A83.6	Prä	A11C
	01	B72A B72B
A83.8	Prä	A11C
	01	B72A B72B
A83.9	Prä	A11C
	01	B81A B81B B81C
A84.0	Prä	A11C
	01	B72A B72B
A84.1	Prä	A11C
	01	B72A B72B
A84.8	Prä	A11C
	01	B72A B72B
A84.9	Prä	A11C
	01	B81A B81B B81C
A85.0	Prä	A11C
	01	B72A B72B
A85.1	Prä	A11C
	01	B72A B72B
A85.2	Prä	A11C
	01	B72A B72B
A85.8	Prä	A11C
	01	B72A B72B
A86	01	B81A B81B B81C
	15	MSPNG SPNG
	Prä	A11C
A87.0	01	B73A B73B
	15	MSPNG SPNG
	Prä	A11C
A87.1	Prä	A11C
	01	B73A B73B
A87.2	Prä	A11C
	01	B73A B73B
A87.8	Prä	A11C
	01	B73A B73B
A87.9	Prä	A11C
	01	B81A B81B B81C
	15	P65B P66B P66C
		P67A P67B P67C
A88.0	Prä	A11C
	01	B72A B72B
A88.1	Prä	A11C
	01	B81A B81B B81C
A88.8	Prä	A11C
	01	B72A B72B B81A
		B81B B81C
A89	01	B81A B81B B81C
	15	MSPNG SPNG
	Prä	A11C
A92.0	Prä	A11C
	18B	T63A T63B
A92.1	Prä	A11C
	18B	T63A T63B
A92.2	Prä	A11C
	01	B72A B72B
A92.3	Prä	A11C
	18B	T63A T63B
A92.4	Prä	A11C
	18B	T63A T63B
A92.5	18B	T63A T63B
A92.8	Prä	A11C
	18B	T63A T63B
A92.9	Prä	A11C
	18B	T63A T63B
A93.0	Prä	A11C
	18B	T63A T63B
A93.1	Prä	A11C
	18B	T63A T63B
A93.2	Prä	A11C
	18B	T63A T63B
A93.8	Prä	A11C
	18B	T63A T63B
A94	Prä	A11C
	18B	T63A T63B
A95.0	Prä	A11C
	18B	T63A T63B
A95.1	Prä	A11C
	18B	T63A T63B
A95.9	Prä	A11C
	18B	T63A T63B
A96.0	15	MSPNG SPNG
	18B	T63A T63B
	Prä	A11C
A96.1	15	MSPNG SPNG
	18B	T63A T63B
	Prä	A11C
A96.2	15	MSPNG SPNG
	18B	T63A T63B
	Prä	A11C
A96.8	15	MSPNG SPNG
	18B	T63A T63B
	Prä	A11C
A96.9	15	MSPNG SPNG
	18B	T63A T63B
	Prä	A11C
A97.0	Prä	A11C
	18B	T63A T63B
A97.1	Prä	A11C
	18B	T63A T63B
A97.2	Prä	A11C
	18B	T63A T63B
A97.9	Prä	A11C
	18B	T63A T63B
A98.0	Prä	A11C
	18B	T63A T63B
A98.1	Prä	A11C
	18B	T63A T63B
A98.2	Prä	A11C
	18B	T63A T63B
A98.3	15	MSPNG SPNG
	18B	T63A T63B
	Prä	A11C
A98.4	Prä	A11C
	18B	T63A T63B
A98.5	11	L63A L63B L63C
		L63D
	15	MSPNG SPNG
	Prä	A11C
A98.8	Prä	A11C
	18B	T63A T63B
A99	Prä	A11C
	18B	T63A T63B
B00.0	09	J61A J61B J61C
		J61D
	15	MSPNG SPNG
B00.1	15	MSPNG SPNG
	18B	T63A T63B
B00.2	03	D40Z D67A D67B
	15	MSPNG SPNG
	17	R50A R60A R60B
		R60C R60D R62A
		R62B R63A R63B
		R63C R63D
	Prä	A93A A97A A97B
		A97C A97D
B00.3	01	B73A B73B
	15	MSPNG SPNG
	Prä	A11C
B00.4	01	B72A B72B
	15	MSPNG SPNG
	Prä	A11C
B00.5	02	C60A C60B
	15	MSPNG SPNG
B00.7		KP KPP
	05	F62A
	15	MSPNG SPNG
	17	R50A R60A R60B
		R60C R60D R62A
		R62B R63A R63B
		R63C R63D
	18B	T01C T60A T60B
		T60C T60D T60E
		T60F T60G T61A
		T86A
	Prä	A93A A97A A97B
		A97C A97D
B00.8	15	MSPNG SPNG
	18B	T63A T63B
B00.9	09	J61A J61B J61C
		J61D
	15	MSPNG SPNG
B01.0	01	B73A B73B
	15	MSPNG SPNG
	Prä	A11C
B01.1	01	B72A B72B
	15	MSPNG SPNG
	Prä	A11C
B01.2	04	E77A E77B E77C
	15	MSPNG SPNG
	Prä	A11C
B01.8	15	MSPNG SPNG

DIAG

ICD	MDC	DRG
	18B	T63A T63B
B01.9	15	MSPNG SPNG
	18B	T63A T63B
B02.0	01	B72A B72B
	15	MSPNG SPNG
	Prä	A11C
B02.1	01	B73A B73B
	15	MSPNG SPNG
	Prä	A11C
B02.2	01	B72A B72B
	15	MSPNG SPNG
B02.3	02	C60A C60B
	15	MSPNG SPNG
B02.7	15	MSPNG SPNG
	18B	T63A T63B
B02.8	15	MSPNG SPNG
	18B	T63A T63B
B02.9	09	J61A J61B J61C J61D
	15	MSPNG SPNG
B03	18B	T63A T63B
B04	18B	T63A T63B
B05.0	01	B72A B72B
	15	MSPNG SPNG
	Prä	A11C
B05.1	01	B73A B73B
	15	MSPNG SPNG
	Prä	A11C
B05.2	04	E77A E77B E77C
	15	MSPNG SPNG
B05.3	03	D62A D62B D62C
	15	MSPNG SPNG
B05.4	15	MSPNG SPNG
	18B	T63A T63B
B05.8	15	MSPNG SPNG
	18B	T63A T63B
B05.9	18B	T63A T63B
B06.0	01	B72A B72B
	15	MSPNG SPNG
B06.8	15	MSPNG SPNG
	18B	T63A T63B
B06.9	18B	T63A T63B
B07	09	J67Z
B08.0	18B	T63A T63B
B08.1	09	J67Z
B08.2	18B	T63A T63B
B08.3	18B	T63A T63B
B08.4	18B	T63A T63B
B08.5	03	D62A D62B D62C
	15	MSPNG SPNG
B08.8	18B	T63A T63B
B09	15	P65B P66B P66C P67A P67B P67C
	18B	T63A T63B
B15.0	07	H63A H63B H63C H63D
	15	MSPNG SPNG
	Prä	A11C
B15.9	07	H63A H63B H63C H63D
	15	MSPNG SPNG
B16.0	07	H63A H63B H63C H63D
	15	MSPNG SPNG
	Prä	A11C
B16.1	07	H63A H63B H63C H63D
	15	MSPNG SPNG
B16.2	07	H63A H63B H63C H63D
	15	MSPNG SPNG
	Prä	A11C
B16.9	07	H63A H63B H63C H63D
	15	MSPNG SPNG
B17.0	07	H63A H63B H63C H63D
	15	MSPNG SPNG
	Prä	A11C
B17.1	07	H63A H63B H63C H63D
	15	MSPNG SPNG
	Prä	A11C
B17.2	07	H63A H63B H63C H63D
	15	MSPNG SPNG
	Prä	A11C
B17.8	07	H63A H63B H63C H63D
	15	MSPNG SPNG
B17.9	07	H63A H63B H63C H63D
	15	MSPNG SPNG
B18.0	07	H63A H63B H63C H63D
	15	MSPNG SPNG
B18.2	07	H63A H63B H63C H63D
	15	MSPNG SPNG
	Prä	A11C
B18.8	07	H63A H63B H63C H63D
	15	MSPNG SPNG
B18.9	07	H63A H63B H63C H63D
	15	MSPNG SPNG
B18.11	07	H63A H63B H63C H63D
	15	MSPNG SPNG
B18.12	07	H63A H63B H63C H63D
	15	MSPNG SPNG
B18.13	07	H63A H63B H63C H63D
B18.14	07	H63A H63B H63C H63D
	15	MSPNG SPNG
B18.19	07	H63A H63B H63C H63D
	15	MSPNG SPNG
B19.0	07	H63A H63B H63C H63D
	15	MSPNG SPNG
B19.9	07	H63A H63B H63C H63D
	15	MSPNG SPNG
B20	01	B85A
	14	O01B O01C O01E
	15	MSPNG SPNG
	16	Q60A
	17	R50A R60A R60B R60C R60D R62A R62B R63A R63B R63C R63D
	18B	T01B T63A
	Prä	A11C A93A A97A A97B A97C A97D
B21	01	B85A
	14	O01B O01C O01E
	15	MSPNG SPNG
	16	Q60A
	17	R50A R60A R60B R60C R60D R62A R62B R63A R63B R63C R63D
	18B	T01B T63A
	Prä	A11C A93A A97A A97B A97C A97D
B22	01	B85A
	14	O01B O01C O01E
	15	MSPNG SPNG
	16	Q60A
	17	R50A R60A R60B R60C R60D R62A R62B R63A R63B R63C R63D
	18B	T01B T63A
	Prä	A11C A93A A97A A97B A97C A97D
B23.0	01	B85A
	14	O01B O01C O01E
	15	MSPNG SPNG
	16	Q60A
	17	R50A R60A R60B R60C R60D R62A R62B R63A R63B R63C R63D
	18B	T01B T63A
	Prä	961Z A11C A93A A97A A97B A97C A97D
B23.8	01	B85A
	14	O01B O01C O01E
	15	MSPNG SPNG
	16	Q60A
	17	R50A R60A R60B R60C R60D R62A R62B R63A R63B R63C R63D
	18B	T01B T63A
	Prä	A11C A93A A97A A97B A97C A97D
B24	01	B85A
	14	O01B O01C O01E
	15	MSPNG SPNG
	16	Q60A
	18B	T01B T63A
	Prä	A11C
B25.0	04	E77A E77B
	06	G46C
	15	MSPNG SPNG
	Prä	A11C
B25.1	06	G46C
	15	MSPNG SPNG
	18B	T63A
	Prä	A11C
B25.2	06	G46C
	15	MSPNG SPNG
	18B	T63A
	Prä	A11C
B25.9	06	G46C
	15	MSPNG SPNG
	18B	T63A
B25.80	06	G46C
	15	MSPNG SPNG
	18B	T63A
B25.88	06	G46C
	15	MSPNG SPNG
	18B	T63A
B26.0	12	M62A M62B

ICD	MDC	DRG
	15	MSPNG SPNG
B26.1	01	B73A B73B
	15	MSPNG SPNG
	Prä	A11C
B26.2	01	B72A B72B
	15	MSPNG SPNG
	Prä	A11C
B26.3	07	H62A H62B H62C
	15	MSPNG SPNG
B26.8	15	MSPNG SPNG
	18B	T63A T63B
B26.9	18B	T63A T63B
B27.0	15	MSPNG SPNG
	18B	T63A T63B
B27.1	15	MSPNG SPNG
	18B	T63A T63B
B27.8	15	MSPNG SPNG
	18B	T63A T63B
B27.9	15	MSPNG SPNG
	18B	T63A T63B
B30.0	02	C63A C63B
B30.1	02	C63A C63B
	15	MSPNG SPNG
B30.2	02	C63A C63B C63C
B30.3	02	C63A C63B C63C
	15	MSPNG SPNG
B30.8	02	C63A C63B C63C
B30.9	02	C63A C63B C63C
B33.0	04	E77A E77B E77C
B33.1	18B	T63A T63B
B33.2	05	F75A F75B F75C
		F75D
	15	MSPNG SPNG
	Prä	A11C
B33.3	18B	T63A T63B
B33.4	Prä	A11C
	18B	T63A T63B
B33.8	18B	T63A T63B
B34.0	15	MSPNG SPNG
	18B	T63A T63B
B34.1	18B	T63A T63B
B34.2	18B	T63A T63B
B34.3	18B	T63A T63B
B34.4	18B	T63A T63B
B34.8	18B	T63A T63B
B34.9	18B	T63A T63B
B35.0	09	J67Z
B35.1	09	J67Z
B35.2	09	J67Z
B35.3	09	J02A J02B J03A
		J03B J04Z J67Z
B35.4	09	J67Z
B35.5	09	J67Z
B35.6	09	J67Z
B35.8	09	J67Z
B35.9	09	J67Z
B36.0	09	J67Z
B36.1	09	J67Z
B36.2	09	J67Z
B36.3	09	J67Z
B36.8	09	J67Z
B36.9	09	J67Z
B37.0	03	D40Z D67A D67B
B37.1	04	E77A E77B
	15	MSPNG SPNG
	17	R50A R63A
	Prä	A11C
B37.2	09	J67Z
	15	MSPNG SPNG
B37.3	13	N61Z
B37.4	12	M62A M62B
	13	N61Z
	15	MSPNG SPNG
B37.5	01	B72A B72B
	15	MSPNG SPNG
	17	R50A R63A
	Prä	A11C
B37.6	05	F61A F61B
	15	MSPNG SPNG
	17	R50A R63A
	Prä	A11C
B37.7		KP KPP
	05	F62A
	07	H63A
	17	R50A R60A R60B
		R60C R60D R61D
		R62A R62B R63A
		R63B R63C
	18B	T01C T60A T60B
		T60C T60D T60E
		T60F T60G T61A
		T86A
	Prä	A11A A11B A11C
		A11D A93A A97A
		A97B A97C A97D
B37.9	18B	T64A T64B T64C
B37.81	06	G67A G67B G67C
		G67D
	15	MSPNG SPNG
	17	R50A R63A
B37.88	17	R50A R63A
	18B	T64A T64B T64C
B38.0	04	E77A E77B E77C
	15	MSPNG SPNG
	17	R50A R63A
	Prä	A11C
B38.1	04	E77A E77B E77C
	15	MSPNG SPNG
	17	R50A R63A
	Prä	A11C
B38.2	04	E77A E77B E77C
	15	MSPNG SPNG
	17	R50A R63A
	Prä	A11C
B38.3	09	J61A J61B J61C
		J61D
	15	MSPNG SPNG
	17	R50A R63A
B38.4	01	B72A B72B
	15	MSPNG SPNG
	17	R50A R63A
	Prä	A11C
B38.7		KP KPP
	05	F62A
	15	MSPNG SPNG
	17	R50A R60A R60B
		R60C R60D R62A
		R62B R63A R63B
		R63C
	18B	T01C T60A T60B
		T60C T60D T60E
		T60F T60G T61A
		T86A
	Prä	A11C A93A A97A
		A97B A97C A97D
B38.8	15	MSPNG SPNG
	17	R50A R63A
	18B	T64A T64B T64C
B38.9	17	R50A R63A
	18B	T64A T64B T64C
B39.0	04	E60A E60B E74Z
	15	MSPNG SPNG
	17	R50A R63A
	Prä	A11C
B39.1	04	E60A E60B E74Z
	15	MSPNG SPNG
	17	R50A R63A
	Prä	A11C
B39.2	04	E60A E60B E74Z
	15	MSPNG SPNG
	17	R50A R63A
	Prä	A11C
B39.3		KP KPP
	05	F62A
	17	R50A R60A R60B
		R60C R60D R62A
		R62B R63A R63B
		R63C
	18B	T01C T60A T60B
		T60C T60D T60E
		T60F T60G T61A
		T86A
	Prä	A11C A93A A97A
		A97B A97C A97D
B39.4	Prä	A11C
	17	R50A R63A
	18B	T64A T64B T64C
B39.5	Prä	A11C
	17	R50A R63A
	18B	T64A T64B T64C
B39.9	Prä	A11C
	17	R50A R63A
	18B	T64A T64B T64C
B40.0	04	E77A E77B E77C
	15	MSPNG SPNG
	17	R50A R63A
	Prä	A11C
B40.1	04	E77A E77B E77C
	15	MSPNG SPNG
	17	R50A R63A
	Prä	A11C
B40.2	04	E77A E77B E77C
	15	MSPNG SPNG
	17	R50A R63A
	Prä	A11C
B40.3	15	MSPNG SPNG
	17	R50A R63A
	18B	T64A T64B T64C
B40.7	15	MSPNG SPNG
	17	R50A R63A
	18B	T64A T64B T64C
	Prä	A11C
B40.8	15	MSPNG SPNG
	17	R50A R63A
	18B	T64A T64B T64C
B40.9	15	MSPNG SPNG
	17	R50A R63A
	18B	T64A T64B T64C
B41.0	15	MSPNG SPNG
	17	R50A R63A
	18B	T64A T64B T64C
	Prä	A11C
B41.7		KP KPP
	05	F62A
	15	MSPNG SPNG
	17	R50A R60A R60B
		R60C R60D R62A
		R62B R63A R63B
		R63C
	18B	T01C T60A T60B

DIAG

ICD	MDC	DRG
		T60C T60D T60E
		T60F T60G T61A
		T86A
	Prä	A11C A93A A97A
		A97B A97C A97D
B41.8	15	MSPNG SPNG
	17	R50A R63A
	18B	T64A T64B T64C
B41.9	15	MSPNG SPNG
	17	R50A R63A
	18B	T64A T64B T64C
B42.0	Prä	A11C
	04	E77A E77B E77C
	17	R50A R63A
B42.1	17	R50A R63A
	18B	T64A T64B T64C
B42.7		KP KPP
	05	F62A
	17	R50A R60A R60B
		R60C R60D R62A
		R62B R63A R63B
		R63C
	18B	T01C T60A T60B
		T60C T60D T60E
		T60F T60G T61A
		T86A
	Prä	A11C A93A A97A
		A97B A97C A97D
B42.8	17	R50A R63A
	18B	T64A T64B T64C
B42.9	17	R50A R63A
	18B	T64A T64B T64C
B43.0	18B	T64A T64B T64C
B43.1	Prä	A11C
	17	R50A R63A
	18B	T64A T64B T64C
B43.2	18B	T64A T64B T64C
B43.8	17	R50A R63A
	18B	T64A T64B T64C
B43.9	17	R50A R63A
	18B	T64A T64B T64C
B44.0	04	E77A E77B
	15	MSPNG SPNG
	17	R50A R63A
	Prä	A11C
B44.1	04	E77A E77B
	15	MSPNG SPNG
	17	R50A R63A
	Prä	A11C
B44.2	15	MSPNG SPNG
	17	R50A R63A
	18B	T64A T64B T64C
B44.7		KP KPP
	05	F62A
	15	MSPNG SPNG
	17	R50A R60A R60B
		R60C R60D R62A
		R62B R63A R63B
		R63C
	18B	T01C T60A T60B
		T60C T60D T60E
		T60F T60G T61A
		T86A
	Prä	A11C A93A A97A
		A97B A97C A97D
B44.8	15	MSPNG SPNG
	17	R50A R63A
	18B	T64A T64B T64C
B44.9	15	MSPNG SPNG
	17	R50A R63A
	18B	T64A T64B T64C
B45.0	04	E77A E77B E77C
	15	MSPNG SPNG
	17	R50A R63A
	Prä	A11C
B45.1	01	B72A B72B
	15	MSPNG SPNG
	17	R50A R63A
	Prä	A11C
B45.2	15	MSPNG SPNG
	18B	T64A T64B T64C
B45.3	15	MSPNG SPNG
	17	R50A R63A
	18B	T64A T64B T64C
	Prä	A11C
B45.7		KP KPP
	05	F62A
	15	MSPNG SPNG
	17	R50A R60A R60B
		R60C R60D R62A
		R62B R63A R63B
		R63C
	18B	T01C T60A T60B
		T60C T60D T60E
		T60F T60G T61A
		T86A
	Prä	A11C A93A A97A
		A97B A97C A97D
B45.8	15	MSPNG SPNG
	17	R50A R63A
	18B	T64A T64B T64C
B45.9	15	MSPNG SPNG
	17	R50A R63A
	18B	T64A T64B T64C
B46.0	04	E77A E77B E77C
	15	MSPNG SPNG
	17	R50A R63A
	Prä	A11C
B46.1	01	B72A B72B
	15	MSPNG SPNG
	17	R50A R63A
	Prä	A11C
B46.2	15	MSPNG SPNG
	17	R50A R63A
	18B	T64A T64B T64C
	Prä	A11C
B46.3	15	MSPNG SPNG
	17	R50A R63A
	18B	T64A T64B T64C
B46.4		KP KPP
	05	F62A
	15	MSPNG SPNG
	17	R50A R60A R60B
		R60C R60D R62A
		R62B R63A R63B
		R63C
	18B	T01C T60A T60B
		T60C T60D T60E
		T60F T60G T61A
		T86A
	Prä	A11C A93A A97A
		A97B A97C A97D
B46.5	15	MSPNG SPNG
	17	R50A R63A
	18B	T64A T64B T64C
B46.8	15	MSPNG SPNG
	17	R50A R63A
	18B	T64A T64B T64C
B46.9	15	MSPNG SPNG
	17	R50A R63A
	18B	T64A T64B T64C
B47.0	15	MSPNG SPNG
	17	R50A R63A
	18B	T64A T64B T64C
B47.1	15	MSPNG SPNG
	17	R50A R63A
	18B	T64A T64B T64C
B47.9	17	R50A R63A
	18B	T64A T64B T64C
B48.0	18B	T64A T64B T64C
B48.1	18B	T64A T64B T64C
B48.2	15	MSPNG SPNG
	18B	T64A T64B T64C
B48.3	17	R50A R63A
	18B	T64A T64B T64C
B48.4	17	R50A R63A
	18B	T64A T64B T64C
B48.5	04	E77A E77B
	15	MSPNG SPNG
	Prä	A11C
B48.7	15	MSPNG SPNG
	17	R50A R63A
	18B	T64A T64B T64C
B48.8	17	R50A R63A
	18B	T64A T64B T64C
B49	17	R50A R63A
	18B	T64A T64B T64C
B50.0	01	B72A B72B
	15	MSPNG SPNG
	Prä	A11C
B50.8		KP KPP
	05	F62A
	15	MSPNG SPNG
	17	R50A R60A R60B
		R60C R60D R62A
		R62B R63A R63B
		R63C R63D
	18B	T01C T60A T60B
		T60C T60D T60E
		T60F T60G T61A
		T86A
	Prä	A11C A93A A97A
		A97B A97C A97D
B50.9	15	MSPNG SPNG
	18B	T64A T64B T64C
	Prä	A11C
B51.0		KP KPP
	05	F62A
	15	MSPNG SPNG
	17	R50A R60A R60B
		R60C R60D R62A
		R62B R63A R63B
		R63C R63D
	18B	T01C T60A T60B
		T60C T60D T60E
		T60F T60G T61A
		T86A
	Prä	A11C A93A A97A
		A97B A97C A97D
B51.8	15	MSPNG SPNG
	18B	T64A T64B T64C
	Prä	A11C
B51.9	15	MSPNG SPNG
	18B	T64A T64B T64C
	Prä	A11C
B52.0	15	MSPNG SPNG
	18B	T64A T64B T64C
	Prä	A11C
B52.8		KP KPP
	05	F62A

ICD	MDC	DRG
	15	MSPNG SPNG
	17	R50A R60A R60B R60C R60D R62A R62B R63A R63B R63C R63D
	18B	T01C T60A T60B T60C T60D T60E T60F T60G T61A T86A
	Prä	A11C A93A A97A A97B A97C A97D
B52.9	15	MSPNG SPNG
	18B	T64A T64B T64C
	Prä	A11C
B53.0	15	MSPNG SPNG
	18B	T64A T64B T64C
	Prä	A11C
B53.1	15	MSPNG SPNG
	18B	T64A T64B T64C
	Prä	A11C
B53.8	15	MSPNG SPNG
	18B	T64A T64B T64C
	Prä	A11C
B54	15	MSPNG SPNG
	18B	T64A T64B T64C
	Prä	A11C
B55.0		KP KPP
	05	F62A
	17	R50A R60A R60B R60C R60D R62A R62B R63A R63B R63C R63D
	18B	T01C T60A T60B T60C T60D T60E T60F T60G T61A T86A
	Prä	A11C A93A A97A A97B A97C A97D
B55.1	Prä	A11C
	09	J61A J61B J61C J61D
B55.2	Prä	A11C
	09	J61A J61B J61C J61D
B55.9	Prä	A11C
	18B	T64A T64B T64C
B56.0	Prä	A11C
	18B	T64A T64B T64C
B56.1	Prä	A11C
	18B	T64A T64B T64C
B56.9	Prä	A11C
	18B	T64A T64B T64C
B57.0	Prä	A11C
	05	F75A F75B F75C F75D
B57.1	Prä	A11C
	18B	T64A T64B T64C
B57.2	Prä	A11C
	05	F75A F75B F75C F75D
B57.3	Prä	A11C
	18B	T64A T64B T64C
B57.4	Prä	A11C
	18B	T64A T64B T64C
B57.5	Prä	A11C
	18B	T64A T64B T64C
B58.0	02	C63A C63B
	15	MSPNG SPNG
B58.1	07	H63A H63B H63C H63D
	15	MSPNG SPNG
	Prä	A11C
B58.2	01	B72A B72B
	15	MSPNG SPNG
	Prä	A11C
B58.3	04	E77A E77B E77C
	15	MSPNG SPNG
	Prä	A11C
B58.8	15	MSPNG SPNG
	18B	T64A T64B T64C
	Prä	A11C
B58.9	15	MSPNG SPNG
	18B	T64A T64B T64C
	Prä	A11C
B60.0	Prä	A11C
	18B	T64A T64B T64C
B60.1	Prä	A11C
	18B	T64A T64B T64C
B60.2	Prä	A11C
	18B	T64A T64B T64C
B60.8	18B	T64A T64B T64C
B64	18B	T64A T64B T64C
B65.0	Prä	A11C
	11	L63A L63B L63C L63D
B65.1	Prä	A11C
	07	H63A H63B H63C H63D
B65.2	Prä	A11C
	18B	T64A T64B T64C
B65.3	09	J61A J61B J61C J61D
B65.8	18B	T64A T64B T64C
B65.9	18B	T64A T64B T64C
B66.0	07	H63A H63B H63C H63D
B66.1	07	H63A H63B H63C H63D
B66.2	18B	T64A T64B T64C
B66.3	07	H63A H63B H63C H63D
B66.4	04	E77A E77B E77C
B66.5	07	H63A H63B H63C H63D
B66.8	18B	T64A T64B T64C
B66.9	18B	T64A T64B T64C
B67.0	Prä	A11C
	07	H63A H63B H63C H63D
B67.1	Prä	A11C
	04	E77A E77B E77C
B67.2	Prä	A11C
	18B	T64A T64B T64C
B67.3	Prä	A11C
	18B	T64A T64B T64C
B67.4	Prä	A11C
	18B	T64A T64B T64C
B67.5	Prä	A11C
	07	H63A H63B H63C H63D
B67.6	Prä	A11C
	18B	T64A T64B T64C
B67.7	Prä	A11C
	18B	T64A T64B T64C
B67.8	Prä	A11C
	07	H63A H63B H63C H63D
B67.9	Prä	A11C
	18B	T64A T64B T64C
B68.0	06	G67A G67B G67C G67D
B68.1	06	G67A G67B G67C G67D
B68.9	06	G67A G67B G67C G67D
B69.0	Prä	A11C
	01	B72A B72B
B69.1	Prä	A11C
	02	C63A C63B C63C
B69.8	06	G67A G67B G67C G67D
B69.9	06	G67A G67B G67C G67D
B70.0	06	G67A G67B G67C G67D
B70.1	06	G67A G67B G67C G67D
B71.0	06	G67A G67B G67C G67D
B71.1	06	G67A G67B G67C G67D
B71.8	06	G67A G67B G67C G67D
B71.9	06	G67A G67B G67C G67D
B72	18B	T64A T64B T64C
B73	18B	T64A T64B T64C
B74.0	18B	T64A T64B T64C
B74.1	18B	T64A T64B T64C
B74.2	18B	T64A T64B T64C
B74.3	18B	T64A T64B T64C
B74.4	18B	T64A T64B T64C
B74.8	18B	T64A T64B T64C
B74.9	18B	T64A T64B T64C
B75	18B	T64A T64B T64C
B76.0	06	G67A G67B G67C G67D
B76.1	06	G67A G67B G67C G67D
B76.8	06	G67A G67B G67C G67D
B76.9	06	G67A G67B G67C G67D
B77.0	06	G67A G67B G67C G67D
B77.8	06	G67A G67B G67C G67D
B77.9	06	G67A G67B G67C G67D
B78.0	06	G67A G67B G67C G67D
B78.1	06	G67A G67B G67C G67D
B78.7	06	G67A G67B G67C G67D
B78.9	06	G67A G67B G67C G67D
B79	06	G67A G67B G67C G67D
B80	06	G67A G67B G67C G67D
B81.0	06	G67A G67B G67C G67D
B81.1	06	G67A G67B G67C G67D
B81.2	06	G67A G67B G67C G67D
B81.3	06	G67A G67B G67C G67D
B81.4	18B	T64A T64B T64C

DIAG

ICD	MDC	DRG
B81.8	06	G67A G67B G67C G67D
B82.0	06	G67A G67B G67C G67D
B82.9	06	G67A G67B G67C G67D
B83.0	18B	T64A T64B T64C
B83.1	18B	T64A T64B T64C
B83.2	18B	T64A T64B T64C
B83.3	18B	T64A T64B T64C
B83.4	18B	T64A T64B T64C
B83.8	18B	T64A T64B T64C
B83.9	18B	T64A T64B T64C
B85.0	09	J67Z
B85.1	09	J67Z
B85.2	09	J67Z
B85.3	09	J67Z
B85.4	09	J67Z
B86	09	J67Z
B87.0	09	J67Z
B87.1	09	J67Z
B87.2	09	J67Z
B87.3	09	J67Z
B87.4	09	J67Z
B87.8	09	J67Z
B87.9	09	J67Z
B88.0	09	J67Z
B88.1	09	J67Z
B88.2	09	J67Z
B88.3	09	J67Z
B88.8	18B	T64A T64B T64C
B88.9	09	J67Z
B89	18B	T64A T64B T64C
B90.0	Prä	961Z
B90.1	Prä	961Z
B90.2	Prä	961Z
B90.8	Prä	961Z
B90.9	Prä	961Z
B91	Prä	961Z
B92	Prä	961Z
B94.0	Prä	961Z
B94.1	Prä	961Z
B94.2	Prä	961Z
B94.8	Prä	961Z
B94.9	Prä	961Z
B95.0	Prä	961Z
	03	D62A
B95.1	Prä	961Z
	03	D62A
B95.2	Prä	961Z
	03	D62A
B95.3	Prä	961Z
	03	D62A
B95.5	Prä	961Z
	03	D62A
B95.6	Prä	961Z
	03	D62A
B95.7	Prä	961Z
	03	D62A
B95.8	Prä	961Z
	03	D62A
B95.41	Prä	961Z
	03	D62A
B95.42	Prä	961Z
	03	D62A
B95.48	Prä	961Z
	03	D62A
B95.90	Prä	961Z
	03	D62A
B95.91	Prä	961Z

ICD	MDC	DRG
	03	D62A
B96.0	Prä	961Z
	03	D62A
B96.2	Prä	961Z
	03	D62A
B96.3	Prä	961Z
	03	D62A
B96.5	Prä	961Z
	03	D62A
B96.6	Prä	961Z
	03	D62A
B96.7	Prä	961Z
	03	D62A
B96.8	Prä	961Z
B97.0	15	MSPNG SPNG
	Prä	961Z
B97.1	15	MSPNG SPNG
	Prä	961Z
B97.2	Prä	961Z
B97.3	Prä	961Z
B97.4	Prä	961Z
	04	E70A E70B
B97.5	Prä	961Z
B97.6	Prä	961Z
B97.7	Prä	961Z
B97.8	Prä	961Z
B98.0	Prä	961Z
B98.1	Prä	961Z
B99	15	P65B P66B P66C P67A P67B P67C
	18B	T64A T64B T64C
C00.0		AKBB
	03	D06B D08Z D09A D09B D28Z D60A D60B
	15	MSPNG SPNG
	Prä	A11C
C00.1		AKBB
	03	D06B D08Z D09A D09B D28Z D60A D60B
	15	MSPNG SPNG
	Prä	A11C
C00.2		AKBB
	03	D06B D08Z D09A D09B D28Z D60A D60B
	15	MSPNG SPNG
	Prä	A11C
C00.3		AKBB
	03	D06B D08Z D09A D09B D28Z D60A D60B
	15	MSPNG SPNG
	Prä	A11C
C00.4		AKBB
	03	D06B D08Z D09A D09B D28Z D60A D60B
	15	MSPNG SPNG
	Prä	A11C
C00.5		AKBB
	03	D06B D08Z D09A D09B D28Z D60A D60B
	15	MSPNG SPNG
	Prä	A11C
C00.6		AKBB
	03	D06B D08Z D09A D09B D28Z D60A

ICD	MDC	DRG
		D60B
	15	MSPNG SPNG
	Prä	A11C
C00.8		AKBB
	03	D06B D08Z D09A D09B D28Z D60A D60B
	15	MSPNG SPNG
	Prä	A11C
C00.9		AKBB
	03	D06B D08Z D09A D09B D28Z D60A D60B
	15	MSPNG SPNG
	Prä	A11C
C01		AKBB
	03	D06B D08Z D09A D09B D28Z D60A D60B
	15	MSPNG SPNG
	Prä	A11C
C02.0		AKBB
	03	D06B D08Z D09A D09B D28Z D60A D60B
	15	MSPNG SPNG
	Prä	A11C
C02.1		AKBB
	03	D06B D08Z D09A D09B D28Z D60A D60B
	15	MSPNG SPNG
	Prä	A11C
C02.2		AKBB
	03	D06B D08Z D09A D09B D28Z D60A D60B
	15	MSPNG SPNG
	Prä	A11C
C02.3		AKBB
	03	D06B D08Z D09A D09B D28Z D60A D60B
	15	MSPNG SPNG
	Prä	A11C
C02.4		AKBB
	03	D06B D08Z D09A D09B D28Z D60A D60B
	Prä	A11C
C02.8		AKBB
	03	D06B D08Z D09A D09B D28Z D60A D60B
	15	MSPNG SPNG
	Prä	A11C
C02.9		AKBB
	03	D06B D08Z D09A D09B D28Z D60A D60B
	15	MSPNG SPNG
	Prä	A11C
C03.0		AKBB
	03	D06B D08Z D09A D09B D28Z D60A D60B
	15	MSPNG SPNG
	Prä	A11C
C03.1		AKBB
	03	D06B D08Z D09A

ICD	MDC	DRG
		D09B D28Z D60A
		D60B
	15	MSPNG SPNG
	Prä	A11C
C03.9		AKBB
	03	D06B D08Z D09A
		D09B D28Z D60A
		D60B
	15	MSPNG SPNG
	Prä	A11C
C04.0		AKBB
	03	D06B D08Z D09A
		D09B D28Z D60A
		D60B
	15	MSPNG SPNG
	Prä	A11C
C04.1		AKBB
	03	D06B D08Z D09A
		D09B D28Z D60A
		D60B
	15	MSPNG SPNG
	Prä	A11C
C04.8		AKBB
	03	D06B D08Z D09A
		D09B D28Z D60A
		D60B
	15	MSPNG SPNG
	Prä	A11C
C04.9		AKBB
	03	D06B D08Z D09A
		D09B D28Z D60A
		D60B
	15	MSPNG SPNG
	Prä	A11C
C05.0		AKBB
	03	D06B D08Z D09A
		D09B D28Z D60A
		D60B
	15	MSPNG SPNG
	Prä	A11C
C05.1		AKBB
	03	D06B D08Z D09A
		D09B D28Z D60A
		D60B
	15	MSPNG SPNG
	Prä	A11C
C05.2		AKBB
	03	D06B D08Z D09A
		D09B D28Z D60A
		D60B
	15	MSPNG SPNG
	Prä	A11C
C05.8		AKBB
	03	D06B D08Z D09A
		D09B D28Z D60A
		D60B
	15	MSPNG SPNG
	Prä	A11C
C05.9		AKBB
	03	D06B D08Z D09A
		D09B D28Z D60A
		D60B
	15	MSPNG SPNG
	Prä	A11C
C06.0		AKBB
	03	D06B D08Z D09A
		D09B D28Z D60A
		D60B
	15	MSPNG SPNG
	Prä	A11C
C06.1		AKBB
	03	D06B D08Z D09A
		D09B D28Z D60A
		D60B
	15	MSPNG SPNG
	Prä	A11C
C06.2		AKBB
	03	D06B D08Z D09A
		D09B D28Z D60A
		D60B
	15	MSPNG SPNG
	Prä	A11C
C06.8		AKBB
	03	D06B D08Z D09A
		D09B D28Z D60A
		D60B
	15	MSPNG SPNG
	Prä	A11C
C06.9		AKBB
	03	D06B D08Z D09A
		D09B D28Z D60A
		D60B
	15	MSPNG SPNG
	Prä	A11C
C07		AKBB
	03	D05A D06B D08Z
		D09A D09B D28Z
		D60A D60B
	15	MSPNG SPNG
	Prä	A11C
C08.0		AKBB
	03	D05A D06B D08Z
		D09A D09B D28Z
		D60A D60B
	15	MSPNG SPNG
	Prä	A11C
C08.1		AKBB
	03	D05A D06B D08Z
		D09A D09B D28Z
		D60A D60B
	15	MSPNG SPNG
	Prä	A11C
C08.8		AKBB
	03	D05A D06B D08Z
		D09A D09B D28Z
		D60A D60B
	15	MSPNG SPNG
	Prä	A11C
C08.9		AKBB
	03	D05A D06B D08Z
		D09A D09B D28Z
		D60A D60B
	15	MSPNG SPNG
	Prä	A11C
C09.0		AKBB
	03	D06B D08Z D09A
		D09B D28Z D60A
		D60B
	15	MSPNG SPNG
	Prä	A11C
C09.1		AKBB
	03	D06B D08Z D09A
		D09B D28Z D60A
		D60B
	15	MSPNG SPNG
	Prä	A11C
C09.8		AKBB
	03	D06B D08Z D09A
		D09B D28Z D60A
		D60B
	15	MSPNG SPNG
	Prä	A11C
C09.9		AKBB
	03	D06B D08Z D09A
		D09B D28Z D60A
		D60B
	Prä	A11C
C10.0		AKBB
	03	D06B D08Z D09A
		D09B D28Z D60A
		D60B
	15	MSPNG SPNG
	Prä	A11C
C10.1		AKBB
	03	D06B D08Z D09A
		D09B D28Z D60A
		D60B
	15	MSPNG SPNG
	Prä	A11C
C10.2		AKBB
	03	D06B D08Z D09A
		D09B D28Z D60A
		D60B
	15	MSPNG SPNG
	Prä	A11C
C10.3		AKBB
	03	D06B D08Z D09A
		D09B D28Z D60A
		D60B
	15	MSPNG SPNG
	Prä	A11C
C10.4		AKBB
	03	D06B D08Z D09A
		D09B D28Z D60A
		D60B
	15	MSPNG SPNG
	Prä	A11C
C10.8		AKBB
	03	D06B D08Z D09A
		D09B D28Z D60A
		D60B
	15	MSPNG SPNG
	Prä	A11C
C10.9		AKBB
	03	D06B D08Z D09A
		D09B D28Z D60A
		D60B
	15	MSPNG SPNG
	Prä	A11C
C11.0		AKBB
	03	D06B D08Z D09A
		D09B D28Z D60A
		D60B
	15	MSPNG SPNG
	Prä	A11C
C11.1		AKBB
	03	D06B D08Z D09A
		D09B D28Z D60A
		D60B
	15	MSPNG SPNG
	Prä	A11C
C11.2		AKBB
	03	D06B D08Z D09A
		D09B D28Z D60A
		D60B
	15	MSPNG SPNG
	Prä	A11C
C11.3		AKBB
	03	D06B D08Z D09A
		D09B D28Z D60A

DIAG

ICD	MDC	DRG
		D60B
	15	MSPNG SPNG
	Prä	A11C
C11.8		AKBB
	03	D06B D08Z D09A
		D09B D28Z D60A
		D60B
	15	MSPNG SPNG
	Prä	A11C
C11.9		AKBB
	03	D06B D08Z D09A
		D09B D28Z D60A
		D60B
	15	MSPNG SPNG
	Prä	A11C
C12		AKBB
	03	D06B D08Z D09A
		D09B D28Z D60A
		D60B
	15	MSPNG SPNG
	Prä	A11C
C13.0		AKBB
	03	D06B D08Z D09A
		D09B D28Z D60A
		D60B
	15	MSPNG SPNG
	Prä	A11C
C13.1		AKBB
	03	D06B D08Z D09A
		D09B D28Z D60A
		D60B
	15	MSPNG SPNG
	Prä	A11C
C13.2		AKBB
	03	D06B D08Z D09A
		D09B D28Z D60A
		D60B
	15	MSPNG SPNG
	Prä	A11C
C13.8		AKBB
	03	D06B D08Z D09A
		D09B D28Z D60A
		D60B
	15	MSPNG SPNG
	Prä	A11C
C13.9		AKBB
	03	D06B D08Z D09A
		D09B D28Z D60A
		D60B
	15	MSPNG SPNG
	Prä	A11C
C14.0		AKBB
	03	D06B D08Z D09A
		D09B D28Z D60A
		D60B
	15	MSPNG SPNG
	Prä	A11C
C14.2		AKBB
	03	D06B D08Z D09A
		D09B D28Z D60A
		D60B
	15	MSPNG SPNG
	Prä	A11C
C14.8		AKBB
	03	D06B D08Z D09A
		D09B D28Z D60A
		D60B
	15	MSPNG SPNG
	Prä	A11C
C15.0		AKBB
	06	G03B G16A G16B
		G17B G19A G38A
		G38B G38C G46A
		G46B G60A G60B
	15	MSPNG SPNG
	Prä	A11C
C15.1		AKBB
	06	G03B G16A G16B
		G17B G19A G38A
		G38B G38C G46A
		G46B G60A G60B
	15	MSPNG SPNG
	Prä	A11C
C15.2		AKBB
	06	G03B G16A G16B
		G17B G19A G38A
		G38B G38C G46A
		G46B G60A G60B
	15	MSPNG SPNG
	Prä	A11C
C15.3		AKBB
	06	G03B G16A G16B
		G17B G19A G38A
		G38B G38C G46A
		G46B G60A G60B
	15	MSPNG SPNG
	Prä	A11C
C15.4		AKBB
	06	G03B G16A G16B
		G17B G19A G38A
		G38B G38C G46A
		G46B G60A G60B
	15	MSPNG SPNG
	Prä	A11C
C15.5		AKBB
	06	G03B G16A G16B
		G17B G19A G38A
		G38B G38C G46A
		G46B G60A G60B
	15	MSPNG SPNG
	Prä	A11C
C15.8		AKBB
	06	G03B G16A G16B
		G17B G19A G38A
		G38B G38C G46A
		G46B G60A G60B
	15	MSPNG SPNG
	Prä	A11C
C15.9		AKBB
	06	G03B G16A G16B
		G17B G19A G38A
		G38B G38C G46A
		G46B G60A G60B
	15	MSPNG SPNG
	Prä	A11C
C16.0		AKBB
	06	G16A G16B G17B
		G19A G38A G38B
		G38C G46A G46B
		G60A G60B
	15	MSPNG SPNG
	Prä	A11C
C16.1		AKBB
	06	G16A G16B G17B
		G19A G38A G38B
		G38C G46A G46B
		G60A G60B
	15	MSPNG SPNG
	Prä	A11C
C16.2		AKBB
	06	G16A G16B G17B
		G19A G38A G38B
		G38C G46A G46B
		G60A G60B
	15	MSPNG SPNG
	Prä	A11C
C16.3		AKBB
	06	G16A G16B G17B
		G19A G38A G38B
		G38C G46A G46B
		G60A G60B
	15	MSPNG SPNG
	Prä	A11C
C16.4		AKBB
	06	G16A G16B G17B
		G19A G38A G38B
		G38C G46A G46B
		G60A G60B
	15	MSPNG SPNG
	Prä	A11C
C16.5		AKBB
	06	G16A G16B G17B
		G19A G38A G38B
		G38C G46A G46B
		G60A G60B
	15	MSPNG SPNG
	Prä	A11C
C16.6		AKBB
	06	G16A G16B G17B
		G19A G38A G38B
		G38C G46A G46B
		G60A G60B
	15	MSPNG SPNG
	Prä	A11C
C16.8		AKBB
	06	G16A G16B G17B
		G19A G38A G38B
		G38C G46A G46B
		G60A G60B
	15	MSPNG SPNG
	Prä	A11C
C16.9		AKBB
	06	G16A G16B G17B
		G19A G38A G38B
		G38C G46A G46B
		G60A G60B
	15	MSPNG SPNG
	Prä	A11C
C17.0		AKBB
	06	G16A G16B G17B
		G19A G38A G38B
		G38C G46A G46B
		G60A G60B
	15	MSPNG SPNG
	Prä	A11C
C17.1		AKBB
	06	G16A G16B G17B
		G19A G38A G38B
		G38C G46A G46B
		G60A G60B
	15	MSPNG SPNG
	Prä	A11C
C17.2		AKBB
	06	G16A G16B G17B
		G19A G38A G38B
		G38C G46A G46B
		G60A G60B
	15	MSPNG SPNG
	Prä	A11C
C17.3		AKBB

ICD	MDC	DRG
	06	G16A G16B G17B G19A G38A G38B G38C G46A G46B G60A G60B
	15	MSPNG SPNG
	Prä	A11C
C17.8		AKBB
	06	G16A G16B G17B G19A G38A G38B G38C G46A G46B G60A G60B
	15	MSPNG SPNG
	Prä	A11C
C17.9		AKBB
	06	G16A G16B G17B G19A G38A G38B G38C G46A G46B G60A G60B
	15	MSPNG SPNG
	Prä	A11C
C18.0		AKBB
	06	G16A G16B G17B G19A G38A G38B G38C G46A G46B G60A G60B
	15	MSPNG SPNG
	Prä	A11C
C18.1		AKBB
	06	G16A G16B G17B G19A G38A G38B G38C G46A G46B G60A G60B
	15	MSPNG SPNG
	Prä	A11C
C18.2		AKBB
	06	G16A G16B G17B G19A G38A G38B G38C G46A G46B G60A G60B
	15	MSPNG SPNG
	Prä	A11C
C18.3		AKBB
	06	G16A G16B G17B G19A G38A G38B G38C G46A G46B G60A G60B
	15	MSPNG SPNG
	Prä	A11C
C18.4		AKBB
	06	G16A G16B G17B G19A G38A G38B G38C G46A G46B G60A G60B
	15	MSPNG SPNG
	Prä	A11C
C18.5		AKBB
	06	G16A G16B G17B G19A G38A G38B G38C G46A G46B G60A G60B
	15	MSPNG SPNG
	Prä	A11C
C18.6		AKBB
	06	G16A G16B G17B G19A G38A G38B G38C G46A G46B G60A G60B
	15	MSPNG SPNG
	Prä	A11C
C18.7		AKBB
	06	G16A G16B G17B G19A G38A G38B G38C G46A G46B G60A G60B
	15	MSPNG SPNG
	Prä	A11C
C18.8		AKBB
	06	G16A G16B G17B G19A G38A G38B G38C G46A G46B G60A G60B
	15	MSPNG SPNG
	Prä	A11C
C18.9		AKBB
	06	G16A G16B G17B G19A G38A G38B G38C G46A G46B G60A G60B
	15	MSPNG SPNG
	Prä	A11C
C19		AKBB
	06	G16A G16B G17B G19A G38A G38B G38C G46A G46B G60A G60B
	15	MSPNG SPNG
	Prä	A11C
C20		AKBB
	06	G16A G16B G17B G19A G38A G38B G38C G46A G46B G60A G60B
	15	MSPNG SPNG
	Prä	A11C
C21.0		AKBB
	06	G16A G16B G17B G19A G38A G38B G38C G46A G46B G60A G60B
	15	MSPNG SPNG
	Prä	A11C
C21.1		AKBB
	06	G16A G16B G17B G19A G38A G38B G38C G46A G46B G60A G60B
	15	MSPNG SPNG
	Prä	A11C
C21.2		AKBB
	06	G16A G16B G17B G19A G38A G38B G38C G46A G46B G60A G60B
	15	MSPNG SPNG
	Prä	A11C
C21.8		AKBB
	06	G16A G16B G17B G19A G38A G38B G38C G46A G46B G60A G60B
	15	MSPNG SPNG
	Prä	A11C
C22.0		AKBB
	07	H07A H07B H09B H41C H61A H61B
	15	MSPNG SPNG
	Prä	A11C
C22.1		AKBB
	07	H07A H07B H09B H41C H61A H61B
	15	MSPNG SPNG
	Prä	A11C
C22.2		AKBB
	07	H07A H07B H09B H41C H61A H61B
	15	MSPNG SPNG
	Prä	A11C
C22.3		AKBB
	07	H07A H07B H09B H41C H61A H61B
	15	MSPNG SPNG
	Prä	A11C
C22.4		AKBB
	07	H07A H07B H09B H41C H61A H61B
	15	MSPNG SPNG
	Prä	A11C
C22.7		AKBB
	07	H07A H07B H09B H41C H61A H61B
	15	MSPNG SPNG
	Prä	A11C
C22.9		AKBB
	07	H07A H07B H09B H41C H61A H61B
	15	MSPNG SPNG
	Prä	A11C
C23		AKBB
	07	H07A H07B H09B H41C H61A H61B
	15	MSPNG SPNG
	Prä	A11C
C24.0		AKBB
	07	H07A H07B H09B H41C H61A H61B
	15	MSPNG SPNG
	Prä	A11C
C24.1		AKBB
	07	H07A H07B H09B H41C H61A H61B
	15	MSPNG SPNG
	Prä	A11C
C24.8		AKBB
	07	H07A H07B H09B H41C H61A H61B
	15	MSPNG SPNG
	Prä	A11C
C24.9		AKBB
	07	H07A H07B H09B H41C H61A H61B
	15	MSPNG SPNG
	Prä	A11C
C25.0		AKBB
	07	H07A H07B H09B H41C H61A H61B
	15	MSPNG SPNG
	Prä	A11C
C25.1		AKBB
	07	H07A H07B H09B H41C H61A H61B
	15	MSPNG SPNG
	Prä	A11C
C25.2		AKBB
	07	H07A H07B H09B H41C H61A H61B
	15	MSPNG SPNG
	Prä	A11C
C25.3		AKBB
	07	H07A H07B H09B H41C H61A H61B

DIAG

ICD	MDC	DRG
	15	MSPNG SPNG
	Prä	A11C
C25.4		AKBB
	07	H07A H07B H09B H41C H61A H61B
	15	MSPNG SPNG
	Prä	A11C
C25.7		AKBB
	07	H07A H07B H09B H41C H61A H61B
	15	MSPNG SPNG
	Prä	A11C
C25.8		AKBB
	07	H07A H07B H09B H41C H61A H61B
	15	MSPNG SPNG
	Prä	A11C
C25.9		AKBB
	07	H07A H07B H09B H41C H61A H61B
	15	MSPNG SPNG
	Prä	A11C
C26.0		AKBB
	06	G16A G16B G17B G19A G38A G38B G38C G46A G46B G60A G60B
	15	MSPNG SPNG
	Prä	A11C
C26.1		AKBB
	15	MSPNG SPNG
	17	R61A R61B R61C R61D R61E
	Prä	A11C
C26.8		AKBB
	06	G16A G16B G17B G19A G38A G38B G38C G46A G46B G60A G60B
	15	MSPNG SPNG
	Prä	A11C
C26.9		AKBB
	06	G16A G16B G17B G19A G38A G38B G38C G46A G46B G60A G60B
	15	MSPNG SPNG
	Prä	A11C
C30.0		AKBB
	03	D06B D08Z D09A D09B D28Z D35Z D60A D60B
	15	MSPNG SPNG
	Prä	A11C
C30.1		AKBB
	03	D06B D08Z D09A D09B D28Z D35Z D60A D60B
	15	MSPNG SPNG
	Prä	A11C
C31.0		AKBB
	03	D06B D08Z D09A D09B D28Z D35Z D60A D60B
	15	MSPNG SPNG
	Prä	A11C
C31.1		AKBB
	03	D06B D08Z D09A D09B D28Z D35Z D60A D60B
	15	MSPNG SPNG
	Prä	A11C
C31.2		AKBB
	03	D06B D08Z D09A D09B D28Z D35Z D60A D60B
	15	MSPNG SPNG
	Prä	A11C
C31.3		AKBB
	03	D06B D08Z D09A D09B D28Z D35Z D60A D60B
	15	MSPNG SPNG
	Prä	A11C
C31.8		AKBB
	03	D06B D08Z D09A D09B D28Z D35Z D60A D60B
	15	MSPNG SPNG
	Prä	A11C
C31.9		AKBB
	03	D06B D08Z D09A D09B D28Z D35Z D60A D60B
	15	MSPNG SPNG
	Prä	A11C
C32.0		AKBB
	03	D06B D08Z D09A D09B D28Z D60A D60B
	15	MSPNG SPNG
	Prä	A11C
C32.1		AKBB
	03	D06B D08Z D09A D09B D28Z D60A D60B
	15	MSPNG SPNG
	Prä	A11C
C32.2		AKBB
	03	D06B D08Z D09A D09B D28Z D60A D60B
	15	MSPNG SPNG
	Prä	A11C
C32.3		AKBB
	03	D06B D08Z D09A D09B D28Z D60A D60B
	15	MSPNG SPNG
	Prä	A11C
C32.8		AKBB
	03	D06B D08Z D09A D09B D28Z D60A D60B
	15	MSPNG SPNG
	Prä	A11C
C32.9		AKBB
	03	D06B D08Z D09A D09B D28Z D60A D60B
	15	MSPNG SPNG
	Prä	A11C
C33		AKBB
	04	E05B E71A E71B E71C E86B
	15	MSPNG SPNG
	Prä	A11C
C34.0		AKBB
	04	E05B E71A E71B E71C E86B
	15	MSPNG SPNG
	Prä	A11C
C34.1		AKBB
	04	E05B E71A E71B E71C E86B
	15	MSPNG SPNG
	Prä	A11C
C34.2		AKBB
	04	E05B E71A E71B E71C E86B
	15	MSPNG SPNG
	Prä	A11C
C34.3		AKBB
	04	E05B E71A E71B E71C E86B
	15	MSPNG SPNG
	Prä	A11C
C34.8		AKBB
	04	E05B E71A E71B E71C E86B
	15	MSPNG SPNG
	Prä	A11C
C34.9		AKBB
	04	E05B E71A E71B E71C E86B
	15	MSPNG SPNG
	Prä	A11C
C37		AKBB
	15	MSPNG SPNG
	17	R62A R62B
	Prä	A11C
C38.0		AKBB
	05	F75A F75B F75C F75D
	15	MSPNG SPNG
	Prä	A11C
C38.1		AKBB
	04	E05B E71A E71B E71C E86B
	15	MSPNG SPNG
	Prä	A11C
C38.2		AKBB
	04	E05B E71A E71B E71C E86B
	15	MSPNG SPNG
	Prä	A11C
C38.3		AKBB
	04	E05B E71A E71B E71C E86B
	15	MSPNG SPNG
	Prä	A11C
C38.4		AKBB
	04	E05B E71A E71B E71C E86B
	15	MSPNG SPNG
	Prä	A11C
C38.8		AKBB
	04	E05B E71A E71B E71C E86B
	15	MSPNG SPNG
	Prä	A11C
C39.0		AKBB
	03	D06B D08Z D09A D09B D28Z D60A D60B
	15	MSPNG SPNG
	Prä	A11C
C39.8		AKBB
	04	E05B E71A E71B E71C E86B

ICD	MDC	DRG
	15	MSPNG SPNG
	Prä	A11C
C39.9		AKBB
	04	E05B E71A E71B
		E71C E86B
	15	MSPNG SPNG
	Prä	A11C
C40.0		AKBB
	08	I13A I13B I29B
		I65A I65B
	15	MSPNG SPNG
	Prä	A11C
C40.1		AKBB
	08	I02A I02B I02C
		I13A I13B I29B
		I32A I32B I32C
		I32D I32E I32F
		I65A I65B
	15	MSPNG SPNG
	Prä	A11C
C40.2		AKBB
	08	I02A I02B I02C
		I03A I03B I04A
		I04B I04C I13A
		I13B I29B I65A
		I65B
	15	MSPNG SPNG
	Prä	A11C A95A A95B
C40.3		AKBB
	08	I02A I02B I02C
		I03A I03B I04A
		I04B I04C I13A
		I13B I29B I65A
		I65B
	15	MSPNG SPNG
	Prä	A11C A95A A95B
C40.8		AKBB
	08	I02A I02B I02C
		I03A I03B I04A
		I04B I04C I13A
		I13B I29B I65A
		I65B
	15	MSPNG SPNG
	Prä	A11C A95A A95B
C40.9		AKBB
	08	I13A I13B I29B
		I65A I65B
	15	MSPNG SPNG
	Prä	A11C
C41.01		AKBB
	01	B09C B66A B66B
		B66C B86B
	Prä	A11C
C41.1		AKBB
	03	D09A D09B D28Z
		D60A D60B
	15	MSPNG SPNG
	Prä	A11C
C41.02		AKBB
	03	D09A D09B D28Z
		D60A D60B
	Prä	A11C
C41.2		AKBB
	08	I13A I13B I29B
		I65A I65B
	15	MSPNG SPNG
	Prä	A11C
C41.4		AKBB
	08	I13A I13B I29B
		I65A I65B
	15	MSPNG SPNG
	Prä	A11C
C41.8		AKBB
	08	I13A I13B I29B
		I65A I65B
	15	MSPNG SPNG
	Prä	A11C
C41.9		AKBB
	08	I13A I13B I29B
		I65A I65B
	15	MSPNG SPNG
	Prä	A11C
C41.30		AKBB
	08	I13A I13B I29B
		I65A I65B
	15	MSPNG SPNG
	Prä	A11C
C41.31		AKBB
	08	I13A I13B I29B
		I65A I65B
	15	MSPNG SPNG
	Prä	A11C
C41.32		AKBB
	08	I13A I13B I29B
		I65A I65B
	15	MSPNG SPNG
	Prä	A11C
C43.0		AKBB
	09	J01A J01B J61A
		J61B J61C J61D
		J86A
	15	MSPNG SPNG
	Prä	A11C
C43.1		AKBB
	02	C29Z C63A C63B
		C63C
	15	MSPNG SPNG
	Prä	A11C
C43.2		AKBB
	09	J01A J01B J61A
		J61B J61C J61D
		J86A
	15	MSPNG SPNG
	Prä	A11C
C43.3		AKBB
	09	J01A J01B J61A
		J61B J61C J61D
		J86A
	15	MSPNG SPNG
	Prä	A11C
C43.4		AKBB
	09	J01A J01B J61A
		J61B J61C J61D
		J86A
	15	MSPNG SPNG
	Prä	A11C
C43.5		AKBB
	09	J01A J01B J61A
		J61B J61C J61D
		J86A
	15	MSPNG SPNG
	Prä	A11C
C43.6		AKBB
	09	J01A J01B J61A
		J61B J61C J61D
		J86A
	15	MSPNG SPNG
	Prä	A11C
C43.7		AKBB
	09	J01A J01B J02A
		J02B J03A J03B
		J04Z J61A J61B
		J61C J61D J86A
	15	MSPNG SPNG
	Prä	A11C
C43.8		AKBB
	09	J01A J01B J61A
		J61B J61C J61D
		J86A
	15	MSPNG SPNG
	Prä	A11C
C43.9		AKBB
	09	J01A J01B J61A
		J61B J61C J61D
		J86A
	15	MSPNG SPNG
	Prä	A11C
C44.0		AKBB
	09	J01A J01B J61A
		J61B J61C J61D
		J86A
	15	MSPNG SPNG
	Prä	A11C
C44.1		AKBB
	02	C29Z C63A C63B
		C63C
	15	MSPNG SPNG
	Prä	A11C
C44.2		AKBB
	09	J01A J01B J61A
		J61B J61C J61D
		J86A
	15	MSPNG SPNG
	Prä	A11C
C44.3		AKBB
	09	J01A J01B J61A
		J61B J61C J61D
		J86A
	15	MSPNG SPNG
	Prä	A11C
C44.4		AKBB
	09	J01A J01B J61A
		J61B J61C J61D
		J86A
	15	MSPNG SPNG
	Prä	A11C
C44.5		AKBB
	09	J01A J01B J61A
		J61B J61C J61D
		J86A
	15	MSPNG SPNG
	Prä	A11C
C44.6		AKBB
	09	J01A J01B J61A
		J61B J61C J61D
		J86A
	15	MSPNG SPNG
	Prä	A11C
C44.7		AKBB
	09	J01A J01B J02A
		J02B J03A J03B
		J04Z J61A J61B
		J61C J61D J86A
	15	MSPNG SPNG
	Prä	A11C
C44.8		AKBB
	09	J01A J01B J61A
		J61B J61C J61D
		J86A
	15	MSPNG SPNG

DIAG

ICD	MDC	DRG
	Prä	A11C
C44.9		AKBB
	09	J01A J01B J61A J61B J61C J61D J86A
	15	MSPNG SPNG
	Prä	A11C
C45.0		AKBB
	04	E05B E33A E33B E71A E71B E71C E86B
	15	MSPNG SPNG
	Prä	A11C
C45.1		AKBB
	06	G16A G16B G17B G19A G38A G38B G38C G46A G46B G60A G60B
	15	MSPNG SPNG
	Prä	A11C
C45.2		AKBB
	05	F75A F75B F75C F75D
	15	MSPNG SPNG
	Prä	A11C
C45.7		AKBB
	08	I13A I13B I27C I29B I65A I65B
	15	MSPNG SPNG
	Prä	A11C
C45.9		AKBB
	08	I13A I13B I27C I29B I65A I65B
	15	MSPNG SPNG
	Prä	A11C
C46.0		AKBB
	09	J01A J01B J61A J61B J61C J61D J86A
	Prä	A11C
C46.1		AKBB
	09	J01A J01B J61A J61B J61C J61D J86A
	Prä	A11C
C46.2		AKBB
	03	D06B D08Z D09A D09B D28Z D60A D60B
	Prä	A11C
C46.3		AKBB
	17	R61A R61B R61C R61D R61E
	Prä	A11C
C46.7		AKBB
	09	J01A J01B J61A J61B J61C J61D J86A
	Prä	A11C
C46.8		AKBB
	09	J01A J01B J61A J61B J61C J61D J86A
	Prä	A11C
C46.9		AKBB
	09	J01A J01B J61A J61B J61C J61D J86A
	Prä	A11C
C47.0		AKBB
	08	I13A I13B I27C I29B I65A I65B
	15	MSPNG SPNG
	Prä	A11C
C47.1		AKBB
	08	I02A I02B I02C I13A I13B I27C I29B I32A I32B I32C I32D I32E I32F I65A I65B
	15	MSPNG SPNG
	Prä	A11C
C47.2		AKBB
	08	I13A I13B I27C I29B I65A I65B
	15	MSPNG SPNG
	Prä	A11C
C47.3		AKBB
	04	E05B E71A E71B E71C E86B
	08	I27C
	15	MSPNG SPNG
	Prä	A11C
C47.4		AKBB
	06	G16A G16B G17B G19A G38A G38B G38C G60A G60B
	08	I27C
	15	MSPNG SPNG
	Prä	A11C
C47.5		AKBB
	08	I13A I13B I27C I29B I65A I65B
	15	MSPNG SPNG
	Prä	A11C
C47.6		AKBB
	08	I13A I13B I27C I29B I65A I65B
	15	MSPNG SPNG
	Prä	A11C
C47.8		AKBB
	08	I13A I13B I27C I29B I65A I65B
	15	MSPNG SPNG
	Prä	A11C
C47.9		AKBB
	08	I13A I13B I27C I29B I65A I65B
	15	MSPNG SPNG
	Prä	A11C
C48.0		AKBB
	06	G16A G16B G17B G19A G38A G38B G38C G60A G60B
	15	MSPNG SPNG
	Prä	A11C
C48.1		AKBB
	06	G16A G16B G17B G19A G38A G38B G38C G46A G46B G60A G60B
	15	MSPNG SPNG
	Prä	A11C
C48.2		AKBB
	06	G16A G16B G17B G19A G38A G38B G38C G46A G46B G60A G60B
	15	MSPNG SPNG
	Prä	A11C
C48.8		AKBB
	06	G16A G16B G17B G19A G38A G38B G38C G46A G46B G60A G60B
	15	MSPNG SPNG
	Prä	A11C
C49.0		AKBB
	08	I13A I13B I27A I27C I29B I65A I65B
	15	MSPNG SPNG
	Prä	A11C
C49.1		AKBB
	08	I02A I02B I02C I13A I13B I27A I27C I29B I32A I32B I32C I32D I32E I32F I65A I65B
	15	MSPNG SPNG
	Prä	A11C
C49.2		AKBB
	08	I02A I02B I02C I03A I03B I04A I04B I04C I13A I13B I27A I27C I29B I65A I65B
	15	MSPNG SPNG
	Prä	A11C A95A A95B
C49.3		AKBB
	04	E05B E71A E71B E71C E86B
	08	I27A I27C
	15	MSPNG SPNG
	Prä	A11C
C49.4		AKBB
	06	G16A G16B G17B G19A G38A G38B G38C G60A G60B
	08	I27A I27C
	15	MSPNG SPNG
	Prä	A11C
C49.5		AKBB
	08	I13A I13B I27A I27C I29B I65A I65B
	15	MSPNG SPNG
	Prä	A11C
C49.6		AKBB
	08	I13A I13B I27A I27C I29B I65A I65B
	15	MSPNG SPNG
	Prä	A11C
C49.8		AKBB
	08	I02A I02B I02C I03A I03B I04A I04B I04C I13A I13B I27A I27C I29B I65A I65B
	15	MSPNG SPNG
	Prä	A11C A95A A95B
C49.9		AKBB
	08	I13A I13B I27A I27C I29B I65A I65B
	15	MSPNG SPNG
	Prä	A11C
C50.0		AKBB

ICD	MDC	DRG
	09	J01A J01B J02A
		J02B J06A J06B
		J08Z J14Z J23A
		J23B J25Z J62A
		J62B J86A
	15	MSPNG SPNG
	Prä	A11C
C50.1		AKBB
	09	J01A J01B J02A
		J02B J06A J06B
		J08Z J14Z J23A
		J23B J25Z J62A
		J62B J86A
	15	MSPNG SPNG
	Prä	A11C
C50.2		AKBB
	09	J01A J01B J02A
		J02B J06A J06B
		J08Z J14Z J23A
		J23B J25Z J62A
		J62B J86A
	15	MSPNG SPNG
	Prä	A11C
C50.3		AKBB
	09	J01A J01B J02A
		J02B J06A J06B
		J08Z J14Z J23A
		J23B J25Z J62A
		J62B J86A
	15	MSPNG SPNG
	Prä	A11C
C50.4		AKBB
	09	J01A J01B J02A
		J02B J06A J06B
		J08Z J14Z J23A
		J23B J25Z J62A
		J62B J86A
	15	MSPNG SPNG
	Prä	A11C
C50.5		AKBB
	09	J01A J01B J02A
		J02B J06A J06B
		J08Z J14Z J23A
		J23B J25Z J62A
		J62B J86A
	15	MSPNG SPNG
	Prä	A11C
C50.6		AKBB
	09	J01A J01B J02A
		J02B J06A J06B
		J08Z J14Z J23A
		J23B J25Z J62A
		J62B J86A
	15	MSPNG SPNG
	Prä	A11C
C50.8		AKBB
	09	J01A J01B J02A
		J02B J06A J06B
		J08Z J14Z J23A
		J23B J25Z J62A
		J62B J86A
	15	MSPNG SPNG
	Prä	A11C
C50.9		AKBB
	09	J01A J01B J02A
		J02B J06A J06B
		J08Z J14Z J23A
		J23B J25Z J62A
		J62B J86A
	15	MSPNG SPNG

ICD	MDC	DRG
	Prä	A11C
C51.0		AKBB
	13	N01A N01B N01C
		N01D N01E N02A
		N02B N33Z N60A
		N60B
	15	MSPNG SPNG
	Prä	A11C
C51.1		AKBB
	13	N01A N01B N01C
		N01D N01E N02A
		N02B N33Z N60A
		N60B
	15	MSPNG SPNG
	Prä	A11C
C51.2		AKBB
	13	N01A N01B N01C
		N01D N01E N02A
		N02B N33Z N60A
		N60B
	15	MSPNG SPNG
	Prä	A11C
C51.8		AKBB
	13	N01A N01B N01C
		N01D N01E N02A
		N02B N33Z N60A
		N60B
	15	MSPNG SPNG
	Prä	A11C
C51.9		AKBB
	13	N01A N01B N01C
		N01D N01E N02A
		N02B N33Z N60A
		N60B
	15	MSPNG SPNG
	Prä	A11C
C52		AKBB
	13	N01A N01B N01C
		N01D N01E N02A
		N02B N33Z N60A
		N60B
	15	MSPNG SPNG
	Prä	A11C
C53.0		AKBB
	13	N01A N01B N01C
		N01D N01E N02A
		N02B N33Z N60A
		N60B
	15	MSPNG SPNG
	Prä	A11C
C53.1		AKBB
	13	N01A N01B N01C
		N01D N01E N02A
		N02B N33Z N60A
		N60B
	15	MSPNG SPNG
	Prä	A11C
C53.8		AKBB
	13	N01A N01B N01C
		N01D N01E N02A
		N02B N33Z N60A
		N60B
	15	MSPNG SPNG
	Prä	A11C
C53.9		AKBB
	13	N01A N01B N01C
		N01D N01E N02A
		N02B N33Z N60A
		N60B
	15	MSPNG SPNG

ICD	MDC	DRG
	Prä	A11C
C54.0		AKBB
	13	N01A N01B N01C
		N01D N01E N02A
		N02B N33Z N60A
		N60B
	15	MSPNG SPNG
	Prä	A11C
C54.1		AKBB
	13	N01A N01B N01C
		N01D N01E N02A
		N02B N33Z N60A
		N60B
	15	MSPNG SPNG
	Prä	A11C
C54.2		AKBB
	13	N01A N01B N01C
		N01D N01E N02A
		N02B N33Z N60A
		N60B
	15	MSPNG SPNG
	Prä	A11C
C54.3		AKBB
	13	N01A N01B N01C
		N01D N01E N02A
		N02B N33Z N60A
		N60B
	15	MSPNG SPNG
	Prä	A11C
C54.8		AKBB
	13	N01A N01B N01C
		N01D N01E N02A
		N02B N33Z N60A
		N60B
	15	MSPNG SPNG
	Prä	A11C
C54.9		AKBB
	13	N01A N01B N01C
		N01D N01E N02A
		N02B N33Z N60A
		N60B
	15	MSPNG SPNG
	Prä	A11C
C55		AKBB
	13	N01A N01B N01C
		N01D N01E N02A
		N02B N33Z N60A
		N60B
	15	MSPNG SPNG
	Prä	A11C
C56		AKBB
	13	N01A N01B N01C
		N01D N01E N02A
		N02B N02C N33Z
		N60A N60B
	15	MSPNG SPNG
	Prä	A11C
C57.0		AKBB
	13	N01A N01B N01C
		N01D N01E N02A
		N02B N02C N33Z
		N60A N60B
	15	MSPNG SPNG
	Prä	A11C
C57.1		AKBB
	13	N01A N01B N01C
		N01D N01E N02A
		N02B N02C N33Z
		N60A N60B
	15	MSPNG SPNG

DIAG

ICD	MDC	DRG
	Prä	A11C
C57.2		AKBB
	13	N01A N01B N01C
		N01D N01E N02A
		N02B N02C N33Z
		N60A N60B
	15	MSPNG SPNG
	Prä	A11C
C57.3		AKBB
	13	N01A N01B N01C
		N01D N01E N02A
		N02B N02C N33Z
		N60A N60B
	15	MSPNG SPNG
	Prä	A11C
C57.4		AKBB
	13	N01A N01B N01C
		N01D N01E N02A
		N02B N02C N33Z
		N60A N60B
	15	MSPNG SPNG
	Prä	A11C
C57.7		AKBB
	13	N01A N01B N01C
		N01D N01E N02A
		N02B N33Z N60A
		N60B
	15	MSPNG SPNG
	Prä	A11C
C57.8		AKBB
	13	N01A N01B N01C
		N01D N01E N02A
		N02B N33Z N60A
		N60B
	15	MSPNG SPNG
	Prä	A11C
C57.9		AKBB
	13	N01A N01B N01C
		N01D N01E N02A
		N02B N33Z N60A
		N60B
	15	MSPNG SPNG
	Prä	A11C
C58		AKBB
	13	N01A N01B N01C
		N01D N01E N02A
		N02B N33Z N60A
		N60B
	Prä	A11C
C60.0		AKBB
	12	M09A M09B M37Z
		M60A M60B
	15	MSPNG SPNG
	Prä	A11C
C60.1		AKBB
	12	M09A M09B M37Z
		M60A M60B
	15	MSPNG SPNG
	Prä	A11C
C60.2		AKBB
	12	M09A M09B M37Z
		M60A M60B
	15	MSPNG SPNG
	Prä	A11C
C60.8		AKBB
	12	M09A M09B M37Z
		M60A M60B
	15	MSPNG SPNG
	Prä	A11C
C60.9		AKBB
	12	M09A M09B M37Z
		M60A M60B
	15	MSPNG SPNG
	Prä	A11C
C61		AKBB
	12	M09A M09B M37Z
		M60A M60B
	Prä	A11C
C62.0		AKBB
	12	M09A M09B M37Z
		M60A M60B
	15	MSPNG SPNG
	Prä	A11C
C62.1		AKBB
	12	M09A M09B M37Z
		M60A M60B
	15	MSPNG SPNG
	Prä	A11C
C62.9		AKBB
	12	M09A M09B M37Z
		M60A M60B
	15	MSPNG SPNG
	Prä	A11C
C63.0		AKBB
	12	M09A M09B M37Z
		M60A M60B
	15	MSPNG SPNG
	Prä	A11C
C63.1		AKBB
	12	M09A M09B M37Z
		M60A M60B
	15	MSPNG SPNG
	Prä	A11C
C63.2		AKBB
	12	M09A M09B M37Z
		M60A M60B
	15	MSPNG SPNG
	Prä	A11C
C63.7		AKBB
	12	M09A M09B M37Z
		M60A M60B
	15	MSPNG SPNG
	Prä	A11C
C63.8		AKBB
	12	M09A M09B M37Z
		M60A M60B
	15	MSPNG SPNG
	Prä	A11C
C63.9		AKBB
	12	M09A M09B M37Z
		M60A M60B
	15	MSPNG SPNG
	Prä	A11C
C64		AKBB
	11	L03Z L09A L10A
		L10B L13A L13B
		L13C L38Z L62A
		L62B
	15	MSPNG SPNG
	Prä	A11C
C65		AKBB
	11	L03Z L09A L10A
		L10B L13A L13B
		L13C L38Z L62A
		L62B
	15	MSPNG SPNG
	Prä	A11C
C66		AKBB
	11	L03Z L09A L10A
		L10B L13A L13B
		L13C L38Z L62A
		L62B
	15	MSPNG SPNG
	Prä	A11C
C67.0		AKBB
	11	L03Z L09A L10A
		L10B L13A L13B
		L13C L38Z L62A
		L62B
	15	MSPNG SPNG
	Prä	A11C
C67.1		AKBB
	11	L03Z L09A L10A
		L10B L13A L13B
		L13C L38Z L62A
		L62B
	15	MSPNG SPNG
	Prä	A11C
C67.2		AKBB
	11	L03Z L09A L10A
		L10B L13A L13B
		L13C L38Z L62A
		L62B
	15	MSPNG SPNG
	Prä	A11C
C67.3		AKBB
	11	L03Z L09A L10A
		L10B L13A L13B
		L13C L38Z L62A
		L62B
	15	MSPNG SPNG
	Prä	A11C
C67.4		AKBB
	11	L03Z L09A L10A
		L10B L13A L13B
		L13C L38Z L62A
		L62B
	15	MSPNG SPNG
	Prä	A11C
C67.5		AKBB
	11	L03Z L09A L10A
		L10B L13A L13B
		L13C L38Z L62A
		L62B
	15	MSPNG SPNG
	Prä	A11C
C67.6		AKBB
	11	L03Z L09A L10A
		L10B L13A L13B
		L13C L38Z L62A
		L62B
	15	MSPNG SPNG
	Prä	A11C
C67.7		AKBB
	11	L03Z L09A L10A
		L10B L13A L13B
		L13C L38Z L62A
		L62B
	15	MSPNG SPNG
	Prä	A11C
C67.8		AKBB
	11	L03Z L09A L10A
		L10B L13A L13B
		L13C L38Z L62A
		L62B
	15	MSPNG SPNG
	Prä	A11C
C67.9		AKBB
	11	L03Z L09A L10A
		L10B L13A L13B

ICD	MDC	DRG
		L13C L38Z L62A
		L62B
	15	MSPNG SPNG
	Prä	A11C
C68.0		AKBB
	11	L03Z L09A L10A
		L10B L13A L13B
		L13C L38Z L62A
		L62B
	15	MSPNG SPNG
	Prä	A11C
C68.1		AKBB
	11	L03Z L09A L10A
		L10B L13A L13B
		L13C L38Z L62A
		L62B
	15	MSPNG SPNG
	Prä	A11C
C68.8		AKBB
	11	L03Z L09A L10A
		L10B L13A L13B
		L13C L38Z L62A
		L62B
	15	MSPNG SPNG
	Prä	A11C
C68.9		AKBB
	11	L03Z L09A L10A
		L10B L13A L13B
		L13C L38Z L62A
		L62B
	15	MSPNG SPNG
	Prä	A11C
C69.0		AKBB
	02	C29Z C63A C63B
		C63C
	15	MSPNG SPNG
	Prä	A11C
C69.1		AKBB
	02	C29Z C63A C63B
		C63C
	15	MSPNG SPNG
	Prä	A11C
C69.2		AKBB
	02	C29Z C63A C63B
		C63C
	15	MSPNG SPNG
	Prä	A11C
C69.3		AKBB
	02	C29Z C63A C63B
		C63C
	15	MSPNG SPNG
	Prä	A11C
C69.4		AKBB
	02	C29Z C63A C63B
		C63C
	15	MSPNG SPNG
	Prä	A11C
C69.5		AKBB
	02	C29Z C63A C63B
		C63C
	15	MSPNG SPNG
	Prä	A11C
C69.6		AKBB
	01	B09C B66A B66B
		B66C B86B
	15	MSPNG SPNG
	Prä	A11C
C69.8		AKBB
	02	C29Z C63A C63B
		C63C
	15	MSPNG SPNG
	Prä	A11C
C69.9		AKBB
	02	C29Z C63A C63B
		C63C
	15	MSPNG SPNG
	Prä	A11C
C70.0		AKBB
	01	B09C B66A B66B
		B66C B86B
	15	MSPNG SPNG
	Prä	A11C
C70.1		AKBB
	01	B09C B66A B66B
		B66C B86B
	15	MSPNG SPNG
	Prä	A11C
C70.9		AKBB
	01	B09C B66A B66B
		B66C B86B
	15	MSPNG SPNG
	Prä	A11C
C71.0		AKBB
	01	B09C B66A B66B
		B66C B86B
	15	MSPNG SPNG
	Prä	A11C
C71.1		AKBB
	01	B09C B66A B66B
		B66C B86B
	15	MSPNG SPNG
	Prä	A11C
C71.2		AKBB
	01	B09C B66A B66B
		B66C B86B
	15	MSPNG SPNG
	Prä	A11C
C71.3		AKBB
	01	B09C B66A B66B
		B66C B86B
	15	MSPNG SPNG
	Prä	A11C
C71.4		AKBB
	01	B09C B66A B66B
		B66C B86B
	15	MSPNG SPNG
	Prä	A11C
C71.5		AKBB
	01	B09C B66A B66B
		B66C B86B
	15	MSPNG SPNG
	Prä	A11C
C71.6		AKBB
	01	B09C B66A B66B
		B66C B86B
	15	MSPNG SPNG
	Prä	A11C
C71.7		AKBB
	01	B09C B66A B66B
		B66C B86B
	15	MSPNG SPNG
	Prä	A11C
C71.8		AKBB
	01	B09C B66A B66B
		B66C B86B
	15	MSPNG SPNG
	Prä	A11C
C71.9		AKBB
	01	B09C B81A B81B
		B81C
	15	MSPNG SPNG
	Prä	A11C
C72.0		AKBB
	01	B09C B66A B66B
		B66C B86B
	15	MSPNG SPNG
	Prä	A11C
C72.1		AKBB
	01	B09C B66A B66B
		B66C B86B
	15	MSPNG SPNG
	Prä	A11C
C72.2		AKBB
	01	B09C B66A B66B
		B66C B86B
	15	MSPNG SPNG
	Prä	A11C
C72.3		AKBB
	01	B09C B66A B66B
		B66C B86B
	15	MSPNG SPNG
	Prä	A11C
C72.4		AKBB
	01	B09C B66A B66B
		B66C B86B
	15	MSPNG SPNG
	Prä	A11C
C72.5		AKBB
	01	B09C B66A B66B
		B66C B86B
	15	MSPNG SPNG
	Prä	A11C
C72.8		AKBB
	01	B09C B66A B66B
		B66C B86B
	15	MSPNG SPNG
	Prä	A11C
C72.9		AKBB
	01	B81A B81B B81C
	15	MSPNG SPNG
	Prä	A11C
C73		AKBB
	10	K06A K64A K64B
		K86A
	15	MSPNG SPNG
	Prä	A11C
C74.0		AKBB
	10	K03Z K64A K64B
		K86A
	15	MSPNG SPNG
	Prä	A11C
C74.1		AKBB
	10	K03Z K64A K64B
		K86A
	15	MSPNG SPNG
	Prä	A11C
C74.9		AKBB
	10	K03Z K64A K64B
		K86A
	15	MSPNG SPNG
	Prä	A11C
C75.0		AKBB
	10	K06A K64A K64B
		K64C K86A
	15	MSPNG SPNG
	Prä	A11C
C75.1		AKBB
	01	B09C B66A B66B
		B66C B86B
	15	MSPNG SPNG

DIAG

ICD	MDC	DRG
	Prä	A11C
C75.2		AKBB
	01	B09C B66A B66B B66C B86B
	15	MSPNG SPNG
	Prä	A11C
C75.3		AKBB
	01	B09C B66A B66B B66C B86B
	15	MSPNG SPNG
	Prä	A11C
C75.4		AKBB
	01	B09C B66A B66B B66C B86B
	15	MSPNG SPNG
	Prä	A11C
C75.5		AKBB
	01	B09C B66A B66B B66C B86B
	15	MSPNG SPNG
	Prä	A11C
C75.8		AKBB
	10	K64A K64B K86A
	15	MSPNG SPNG
	Prä	A11C
C75.9		AKBB
	10	K64A K64B K64C K86A
	15	MSPNG SPNG
	Prä	A11C
C76.0		AKBB
	03	D06B D08Z D09A D09B D28Z D60A D60B
	15	MSPNG SPNG
	Prä	A11C
C76.1		AKBB
	04	E05B E71A E71B E71C E86B
	15	MSPNG SPNG
	Prä	A11C
C76.2		AKBB
	06	G16A G16B G17B G19A G38A G38B G38C G46A G46B G60A G60B
	15	MSPNG SPNG
	Prä	A11C
C76.3		AKBB
	12	M09A M09B M37Z M60A M60B
	13	N01A N01B N01C N01D N01E N02A N02B N33Z N60A N60B
	15	MSPNG SPNG
	Prä	A11C
C76.4		AKBB
	15	MSPNG SPNG
	17	R62A R62B
	Prä	A11C
C76.5		AKBB
	15	MSPNG SPNG
	17	R62A R62B
	Prä	A11C
C76.7		AKBB
	15	MSPNG SPNG
	17	R62A R62B
	Prä	A11C
C76.8		AKBB
	15	MSPNG SPNG
	17	R62A R62B
	Prä	A11C
C77.0		AKBB
	15	MSPNG SPNG
	17	R01A R01B R62A R62B
	Prä	A11C A97A A97B A97C A97D
C77.1		AKBB
	15	MSPNG SPNG
	17	R01A R01B R62A R62B
	Prä	A11C A97A A97B A97C A97D
C77.2		AKBB
	15	MSPNG SPNG
	17	R01A R01B R62A R62B
	Prä	A11C A97A A97B A97C A97D
C77.3		AKBB
	15	MSPNG SPNG
	17	R01A R01B R62A R62B
	Prä	A11C A97A A97B A97C A97D
C77.4		AKBB
	15	MSPNG SPNG
	17	R01A R01B R62A R62B
	Prä	A11C A97A A97B A97C A97D
C77.5		AKBB
	15	MSPNG SPNG
	17	R01A R01B R62A R62B
	Prä	A11C A97A A97B A97C A97D
C77.8		AKBB
	15	MSPNG SPNG
	17	R01A R01B R62A R62B
	Prä	A11C A97A A97B A97C A97D
C77.9		AKBB
	15	MSPNG SPNG
	17	R01A R01B R62A R62B
	Prä	A11C A97A A97B A97C A97D
C78.0		AKBB
	04	E05B E71A E71B E71C E86B
	15	MSPNG SPNG
	Prä	A11C
C78.1		AKBB
	04	E05B E71A E71B E71C E86B
	15	MSPNG SPNG
	Prä	A11C
C78.2		AKBB
	04	E05B E71A E71B E71C E86B
	15	MSPNG SPNG
	Prä	A11C
C78.3		AKBB
	04	E05B E71A E71B E71C E86B
	15	MSPNG SPNG
	Prä	A11C
C78.4		AKBB
	06	G16A G16B G17B G19A G38A G38B G38C G46A G46B G60A G60B
	15	MSPNG SPNG
	Prä	A11C
C78.5		AKBB
	06	G16A G16B G17B G19A G38A G38B G38C G46A G46B G60A G60B
	15	MSPNG SPNG
	Prä	A11C
C78.6		AKBB
	06	G02A G02B G16A G16B G17B G19A G38A G38B G38C G46A G46B G60A G60B
	15	MSPNG SPNG
	Prä	A11C
C78.7		AKBB
	06	G02A G02B G38A G38B G38C
	07	H07A H07B H09B H41C H61A H61B
	15	MSPNG SPNG
	Prä	A11C
C78.8		AKBB
	06	G16A G16B G17B G19A G38A G38B G38C G46A G46B G60A G60B
	15	MSPNG SPNG
	Prä	A11C
C79.0		AKBB
	11	L03Z L09A L10A L10B L13A L13B L13C L38Z L62A L62B
	15	MSPNG SPNG
	Prä	A11C
C79.1		AKBB
	11	L03Z L09A L10A L10B L13A L13B L13C L38Z L62A L62B
	15	MSPNG SPNG
	Prä	A11C
C79.2		AKBB
	09	J01A J01B J61A J61B J61C J61D
	15	MSPNG SPNG
	Prä	A11C
C79.3		AKBB
	01	B09C B66A B66B B66C B70A B70B B70D B86B
	15	MSPNG SPNG
	Prä	A11C
C79.4		AKBB
	01	B09C B66A B66B B66C B81A B81B B81C B86B
	15	MSPNG SPNG
	Prä	A11C
C79.5		AKBB
	08	I02A I02B I02C

ICD	MDC	DRG
		I03A I03B I04A
		I04B I04C I10B
		I13A I13B I29B
		I65A I65B
	15	MSPNG SPNG
	17	R62A
	Prä	A11C A95A A95B
C79.6		AKBB
	13	N01A N01B N01C
		N01D N01E N02A
		N02B N02C N33Z
		N60A N60B
	15	MSPNG SPNG
	Prä	A11C
C79.7		AKBB
	10	K03Z K64A K64B
		K64C K86A
	15	MSPNG SPNG
	Prä	A11C
C79.9		AKBB
	17	R62A R62B
	Prä	A11C
C79.81		AKBB
	09	J01A J01B J02A
		J02B J06A J06B
		J08Z J14Z J23A
		J23B J25Z J62A
		J62B
	15	MSPNG SPNG
	Prä	A11C
C79.82		AKBB
	12	M09A M09B M37Z
		M60A M60B
	13	N01A N01B N01C
		N01D N01E N02A
		N02B N33Z N60A
		N60B
	15	MSPNG SPNG
	Prä	A11C
C79.83		AKBB
	05	F75A F75B F75C
		F75D
	15	MSPNG SPNG
	Prä	A11C
C79.84		AKBB
	05	F75A F75B F75C
		F75D
	15	MSPNG SPNG
	Prä	A11C
C79.85		AKBB
	03	D09A D09B D28Z
		D60A D60B
	15	MSPNG SPNG
	Prä	A11C
C79.86		AKBB
	08	I13A I13B I29B
		I65A I65B
	15	MSPNG SPNG
	Prä	A11C
C79.88		AKBB
	15	MSPNG SPNG
	17	R62A R62B
	Prä	A11C
C80.0		AKBB
	17	R62A R62B
	Prä	A11C
C80.9		AKBB
	17	R62A R62B
	Prä	A11C
C81.0		AKBB
	15	MSPNG SPNG
	17	R61A R61B R61C
		R61D R61E
	Prä	A11A A11B A11C
		A11D
C81.1		AKBB
	15	MSPNG SPNG
	17	R61A R61B R61C
		R61D R61E
	Prä	A11A A11B A11C
		A11D
C81.2		AKBB
	15	MSPNG SPNG
	17	R61A R61B R61C
		R61D R61E
	Prä	A11A A11B A11C
		A11D
C81.3		AKBB
	15	MSPNG SPNG
	17	R61A R61B R61C
		R61D R61E
	Prä	A11A A11B A11C
		A11D
C81.4		AKBB
	15	MSPNG SPNG
	17	R61A R61B R61C
		R61D R61E
	Prä	A11A A11B A11C
		A11D
C81.7		AKBB
	15	MSPNG SPNG
	17	R61A R61B R61C
		R61D R61E
	Prä	A11A A11B A11C
		A11D
C81.9		AKBB
	15	MSPNG SPNG
	17	R61A R61B R61C
		R61D R61E
	Prä	A11A A11B A11C
		A11D
C82.0		AKBB
	15	MSPNG SPNG
	17	R61A R61B R61C
		R61D R61E
	Prä	A11A A11B A11C
		A11D
C82.1		AKBB
	15	MSPNG SPNG
	17	R61A R61B R61C
		R61D R61E
	Prä	A11A A11B A11C
		A11D
C82.2		AKBB
	15	MSPNG SPNG
	17	R61A R61B R61C
		R61D R61E
	Prä	A11A A11B A11C
		A11D
C82.3		AKBB
	15	MSPNG SPNG
	17	R61A R61B R61C
		R61D R61E
	Prä	A11A A11B A11C
		A11D
C82.4		AKBB
	15	MSPNG SPNG
	17	R61A R61B R61C
		R61D R61E
	Prä	A11A A11B A11C
		A11D
C82.5		AKBB
	15	MSPNG SPNG
	17	R61A R61B R61C
		R61D R61E
	Prä	A11A A11B A11C
		A11D
C82.6		AKBB
	15	MSPNG SPNG
	17	R61A R61B R61C
		R61D R61E
	Prä	A11A A11B A11C
		A11D
C82.7		AKBB
	15	MSPNG SPNG
	17	R61A R61B R61C
		R61D R61E
	Prä	A11A A11B A11C
		A11D
C82.9		AKBB
	15	MSPNG SPNG
	17	R61A R61B R61C
		R61D R61E
	Prä	A11A A11B A11C
		A11D
C83.0		AKBB
	15	MSPNG SPNG
	17	R61A R61B R61C
		R61D R61E
	Prä	A11A A11B A11C
		A11D
C83.1		AKBB
	15	MSPNG SPNG
	17	R61A R61B R61C
		R61D R61E
	Prä	A11A A11B A11C
		A11D
C83.3		AKBB
	15	MSPNG SPNG
	17	R61A R61B R61C
		R61D R61E
	Prä	A11A A11B A11C
		A11D A20Z
C83.5		AKBB
	15	MSPNG SPNG
	17	R61A R61B R61C
		R61D R61E
	Prä	A11A A11B A11C
		A11D
C83.7		AKBB
	15	MSPNG SPNG
	17	R61A R61B R61C
		R61D R61E
	Prä	A11A A11B A11C
		A11D
C83.8		AKBB
	15	MSPNG SPNG
	17	R61A R61B R61C
		R61D R61E
	Prä	A11A A11B A11C
		A11D A20Z
C83.9		AKBB
	15	MSPNG SPNG
	17	R61A R61B R61C
		R61D R61E
	Prä	A11A A11B A11C
		A11D
C84.0		AKBB
	15	MSPNG SPNG
	17	R61A R61B R61C

DIAG

ICD	MDC	DRG
		R61D R61E
	Prä	A11A A11B A11C
		A11D
C84.1		AKBB
	15	MSPNG SPNG
	17	R61A R61B R61C
		R61D R61E
	Prä	A11A A11B A11C
		A11D
C84.4		AKBB
	15	MSPNG SPNG
	17	R61A R61B R61C
		R61D R61E
	Prä	A11A A11B A11C
		A11D
C84.5		AKBB
	15	MSPNG SPNG
	17	R61A R61B R61C
		R61D R61E
	Prä	A11A A11B A11C
		A11D
C84.6		AKBB
	15	MSPNG SPNG
	17	R61A R61B R61C
		R61D R61E
	Prä	A11A A11B A11C
		A11D
C84.7		AKBB
	15	MSPNG SPNG
	17	R61A R61B R61C
		R61D R61E
	Prä	A11A A11B A11C
		A11D
C84.8		AKBB
	15	MSPNG SPNG
	17	R61A R61B R61C
		R61D R61E
	Prä	A11A A11B A11C
		A11D
C84.9		AKBB
	15	MSPNG SPNG
	17	R61A R61B R61C
		R61D R61E
	Prä	A11A A11B A11C
		A11D
C85.1		AKBB
	15	MSPNG SPNG
	17	R61A R61B R61C
		R61D R61E
	Prä	A11A A11B A11C
		A11D A20Z
C85.2		AKBB
	15	MSPNG SPNG
	17	R61A R61B R61C
		R61D R61E
	Prä	A11A A11B A11C
		A11D A20Z
C85.7		AKBB
	15	MSPNG SPNG
	17	R61A R61B R61C
		R61D R61E
	Prä	A11A A11B A11C
		A11D
C85.9		AKBB
	15	MSPNG SPNG
	17	R61A R61B R61C
		R61D R61E
	Prä	A11A A11B A11C
		A11D
C86.0		AKBB
	15	MSPNG SPNG
	17	R61A R61B R61C
		R61D R61E
	Prä	A11A A11B A11C
		A11D
C86.1		AKBB
	15	MSPNG SPNG
	17	R61A R61B R61C
		R61D R61E
	Prä	A11A A11B A11C
		A11D
C86.2		AKBB
	15	MSPNG SPNG
	17	R61A R61B R61C
		R61D R61E
	Prä	A11A A11B A11C
		A11D
C86.3		AKBB
	15	MSPNG SPNG
	17	R61A R61B R61C
		R61D R61E
	Prä	A11A A11B A11C
		A11D
C86.4		AKBB
	15	MSPNG SPNG
	17	R61A R61B R61C
		R61D R61E
	Prä	A11A A11B A11C
		A11D
C86.5		AKBB
	15	MSPNG SPNG
	17	R61A R61B R61C
		R61D R61E
	Prä	A11A A11B A11C
		A11D
C86.6		AKBB
	15	MSPNG SPNG
	17	R61A R61B R61C
		R61D R61E
	Prä	A11A A11B A11C
		A11D
C88.00		AKBB
	15	MSPNG SPNG
	17	R61A R61B R61C
		R61D R61E
	Prä	A11A A11B A11C
		A11D
C88.01		AKBB
	15	MSPNG SPNG
	17	R61A R61B R61C
		R61D R61E
	Prä	A11A A11B A11C
		A11D
C88.20		AKBB
	15	MSPNG SPNG
	17	R61A R61B R61C
		R61D R61E
	Prä	A11A A11B A11C
		A11D
C88.21		AKBB
	15	MSPNG SPNG
	17	R61A R61B R61C
		R61D R61E
	Prä	A11A A11B A11C
		A11D
C88.30		AKBB
	15	MSPNG SPNG
	17	R61A R61B R61C
		R61D R61E
	Prä	A11A A11B A11C
		A11D
C88.31		AKBB
	15	MSPNG SPNG
	17	R61A R61B R61C
		R61D R61E
	Prä	A11A A11B A11C
		A11D
C88.40		AKBB
	15	MSPNG SPNG
	17	R61A R61B R61C
		R61D R61E
	Prä	A11A A11B A11C
		A11D A20Z
C88.41		AKBB
	15	MSPNG SPNG
	17	R61A R61B R61C
		R61D R61E
	Prä	A11A A11B A11C
		A11D A20Z
C88.70		AKBB
	15	MSPNG SPNG
	17	R61A R61B R61C
		R61D R61E
	Prä	A11A A11B A11C
		A11D
C88.71		AKBB
	15	MSPNG SPNG
	17	R61A R61B R61C
		R61D R61E
	Prä	A11A A11B A11C
		A11D
C88.90		AKBB
	15	MSPNG SPNG
	17	R61A R61B R61C
		R61D R61E
	Prä	A11A A11B A11C
		A11D
C88.91		AKBB
	15	MSPNG SPNG
	17	R61A R61B R61C
		R61D R61E
	Prä	A11A A11B A11C
		A11D
C90.00		AKBB
	15	MSPNG SPNG
	17	R61A R61B R61C
		R61D R61E
	Prä	A11A A11B A11C
		A11D
C90.01		AKBB
	15	MSPNG SPNG
	17	R61A R61B R61C
		R61D R61E
	Prä	A11A A11B A11C
		A11D
C90.10		AKBB
	15	MSPNG SPNG
	17	R61A R61B R61C
		R61D R61E
	Prä	A11A A11B A11C
		A11D
C90.11		AKBB
	15	MSPNG SPNG
	17	R61A R61B R61C
		R61D R61E
	Prä	A11A A11B A11C
		A11D
C90.20		AKBB
	15	MSPNG SPNG
	17	R61A R61B R61C

ICD	MDC	DRG
		R61D R61E
	Prä	A11A A11B A11C A11D
C90.21		AKBB
	15	MSPNG SPNG
	17	R61A R61B R61C R61D R61E
	Prä	A11A A11B A11C A11D
C90.30		AKBB
	15	MSPNG SPNG
	17	R61A R61B R61C R61D R61E
	Prä	A11A A11B A11C A11D
C90.31		AKBB
	15	MSPNG SPNG
	17	R61A R61B R61C R61D R61E
	Prä	A11A A11B A11C A11D
C91.00		AKBB
	15	MSPNG SPNG
	17	R50A R63A R63B R63C R63D
	Prä	A11A A11B A11C A11D
C91.01		AKBB
	15	MSPNG SPNG
	17	R50A R63A R63B R63C R63D
	Prä	A11A A11B A11C A11D
C91.10		AKBB
	15	MSPNG SPNG
	17	R61A R61B R61C R61D R61E
	Prä	A11A A11B A11C A11D
C91.11		AKBB
	15	MSPNG SPNG
	17	R61A R61B R61C R61D R61E
	Prä	A11A A11B A11C A11D
C91.30		AKBB
	15	MSPNG SPNG
	17	R61A R61B R61C R61D R61E
	Prä	A11A A11B A11C A11D
C91.31		AKBB
	15	MSPNG SPNG
	17	R61A R61B R61C R61D R61E
	Prä	A11A A11B A11C A11D
C91.40		AKBB
	15	MSPNG SPNG
	17	R61A R61B R61C R61D R61E
	Prä	A11A A11B A11C A11D
C91.41		AKBB
	15	MSPNG SPNG
	17	R61A R61B R61C R61D R61E
	Prä	A11A A11B A11C A11D
C91.50		AKBB
	15	MSPNG SPNG
	17	R61A R61B R61C R61D R61E
	Prä	A11A A11B A11C A11D
C91.51		AKBB
	15	MSPNG SPNG
	17	R61A R61B R61C R61D R61E
	Prä	A11A A11B A11C A11D
C91.60		AKBB
	15	MSPNG SPNG
	17	R61A R61B R61C R61D R61E
	Prä	A11A A11B A11C A11D
C91.61		AKBB
	15	MSPNG SPNG
	17	R61A R61B R61C R61D R61E
	Prä	A11A A11B A11C A11D
C91.70		AKBB
	15	MSPNG SPNG
	17	R61A R61B R61C R61D R61E
	Prä	A11A A11B A11C A11D
C91.71		AKBB
	15	MSPNG SPNG
	17	R61A R61B R61C R61D R61E
	Prä	A11A A11B A11C A11D
C91.80		AKBB
	15	MSPNG SPNG
	17	R50A R63A R63B R63C R63D
	Prä	A11A A11B A11C A11D
C91.81		AKBB
	15	MSPNG SPNG
	17	R50A R63A R63B R63C R63D
	Prä	A11A A11B A11C A11D
C91.90		AKBB
	15	MSPNG SPNG
	17	R61A R61B R61C R61D R61E
	Prä	A11A A11B A11C A11D
C91.91		AKBB
	15	MSPNG SPNG
	17	R61A R61B R61C R61D R61E
	Prä	A11A A11B A11C A11D
C92.00		AKBB
	15	MSPNG SPNG
	17	R50A R60A R60B R60C R60D
	Prä	A11A A11B A11C A11D A93A A97A A97B A97C A97D
C92.01		AKBB
	15	MSPNG SPNG
	17	R50A R60A R60B R60C R60D
	Prä	A11A A11B A11C A11D A93A A97A A97B A97C A97D
C92.10		AKBB
	15	MSPNG SPNG
	17	R61A R61B R61C R61D R61E
	Prä	A11A A11B A11C A11D
C92.11		AKBB
	15	MSPNG SPNG
	17	R61A R61B R61C R61D R61E
	Prä	A11A A11B A11C A11D
C92.20		AKBB
	15	MSPNG SPNG
	17	R61A R61B R61C R61D R61E
	Prä	A11A A11B A11C A11D
C92.21		AKBB
	15	MSPNG SPNG
	17	R61A R61B R61C R61D R61E
	Prä	A11A A11B A11C A11D
C92.30		AKBB
	15	MSPNG SPNG
	17	R61A R61B R61C R61D R61E
	Prä	A11A A11B A11C A11D
C92.31		AKBB
	15	MSPNG SPNG
	17	R61A R61B R61C R61D R61E
	Prä	A11A A11B A11C A11D
C92.40		AKBB
	15	MSPNG SPNG
	17	R50A R60A R60B R60C R60D
	Prä	A11A A11B A11C A11D A93A A97A A97B A97C A97D
C92.41		AKBB
	15	MSPNG SPNG
	17	R50A R60A R60B R60C R60D
	Prä	A11A A11B A11C A11D A93A A97A A97B A97C A97D
C92.50		AKBB
	15	MSPNG SPNG
	17	R50A R60A R60B R60C R60D
	Prä	A11A A11B A11C A11D A93A A97A A97B A97C A97D
C92.51		AKBB
	15	MSPNG SPNG
	17	R50A R60A R60B R60C R60D
	Prä	A11A A11B A11C A11D A93A A97A A97B A97C A97D
C92.60		AKBB
	15	MSPNG SPNG
	17	R50A R60A R60B

DIAG

ICD	MDC	DRG
		R60C R60D
	Prä	A11A A11B A11C
		A11D A93A A97A
		A97B A97C A97D
C92.61		AKBB
	15	MSPNG SPNG
	17	R50A R60A R60B
		R60C R60D
	Prä	A11A A11B A11C
		A11D A93A A97A
		A97B A97C A97D
C92.70		AKBB
	15	MSPNG SPNG
	17	R61A R61B R61C
		R61D R61E
	Prä	A11A A11B A11C
		A11D
C92.71		AKBB
	15	MSPNG SPNG
	17	R61A R61B R61C
		R61D R61E
	Prä	A11A A11B A11C
		A11D
C92.80		AKBB
	15	MSPNG SPNG
	17	R50A R60A R60B
		R60C R60D
	Prä	A11A A11B A11C
		A11D A93A A97A
		A97B A97C A97D
C92.81		AKBB
	15	MSPNG SPNG
	17	R50A R60A R60B
		R60C R60D
	Prä	A11A A11B A11C
		A11D A93A A97A
		A97B A97C A97D
C92.90		AKBB
	15	MSPNG SPNG
	17	R61A R61B R61C
		R61D R61E
	Prä	A11A A11B A11C
		A11D
C92.91		AKBB
	15	MSPNG SPNG
	17	R61A R61B R61C
		R61D R61E
	Prä	A11A A11B A11C
		A11D
C93.00		AKBB
	15	MSPNG SPNG
	17	R50A R60A R60B
		R60C R60D
	Prä	A11A A11B A11C
		A11D A93A A97A
		A97B A97C A97D
C93.01		AKBB
	15	MSPNG SPNG
	17	R50A R60A R60B
		R60C R60D
	Prä	A11A A11B A11C
		A11D A93A A97A
		A97B A97C A97D
C93.10		AKBB
	15	MSPNG SPNG
	17	R61A R61B R61C
		R61D R61E
	Prä	A11A A11B A11C
		A11D
C93.11		AKBB
	15	MSPNG SPNG
	17	R61A R61B R61C
		R61D R61E
	Prä	A11A A11B A11C
		A11D
C93.30		AKBB
	15	MSPNG SPNG
	17	R61A R61B R61C
		R61D R61E
	Prä	A11A A11B A11C
		A11D
C93.31		AKBB
	15	MSPNG SPNG
	17	R61A R61B R61C
		R61D R61E
	Prä	A11A A11B A11C
		A11D
C93.70		AKBB
	15	MSPNG SPNG
	17	R61A R61B R61C
		R61D R61E
	Prä	A11A A11B A11C
		A11D
C93.71		AKBB
	15	MSPNG SPNG
	17	R61A R61B R61C
		R61D R61E
	Prä	A11A A11B A11C
		A11D
C93.90		AKBB
	15	MSPNG SPNG
	17	R61A R61B R61C
		R61D R61E
	Prä	A11A A11B A11C
		A11D
C93.91		AKBB
	15	MSPNG SPNG
	17	R61A R61B R61C
		R61D R61E
	Prä	A11A A11B A11C
		A11D
C94.00		AKBB
	15	MSPNG SPNG
	17	R50A R60A R60B
		R60C R60D
	Prä	A11A A11B A11C
		A11D A93A A97A
		A97B A97C A97D
C94.01		AKBB
	15	MSPNG SPNG
	17	R50A R60A R60B
		R60C R60D
	Prä	A11A A11B A11C
		A11D A93A A97A
		A97B A97C A97D
C94.8		AKBB
	Prä	961Z
C94.20		AKBB
	15	MSPNG SPNG
	17	R50A R60A R60B
		R60C R60D
	Prä	A11A A11B A11C
		A11D A93A A97A
		A97B A97C A97D
C94.21		AKBB
	15	MSPNG SPNG
	17	R50A R60A R60B
		R60C R60D
	Prä	A11A A11B A11C
		A11D A93A A97A
		A97B A97C A97D
C94.30		AKBB
	15	MSPNG SPNG
	17	R61A R61B R61C
		R61D R61E
	Prä	A11A A11B A11C
		A11D
C94.31		AKBB
	15	MSPNG SPNG
	17	R61A R61B R61C
		R61D R61E
	Prä	A11A A11B A11C
		A11D
C94.40		AKBB
	15	MSPNG SPNG
	17	R61A R61B R61C
		R61D R61E
	Prä	A11A A11B A11C
		A11D
C94.41		AKBB
	15	MSPNG SPNG
	17	R61A R61B R61C
		R61D R61E
	Prä	A11A A11B A11C
		A11D
C94.60		AKBB
	15	MSPNG SPNG
	17	R61A R61B R61C
		R61D R61E
	Prä	A11C
C94.61		AKBB
	15	MSPNG SPNG
	17	R61A R61B R61C
		R61D R61E
	Prä	A11C
C94.70		AKBB
	15	MSPNG SPNG
	17	R61A R61B R61C
		R61D R61E
	Prä	A11A A11B A11C
		A11D
C94.71		AKBB
	15	MSPNG SPNG
	17	R61A R61B R61C
		R61D R61E
	Prä	A11A A11B A11C
		A11D
C95.00		AKBB
	15	MSPNG SPNG
	17	R50A R63A R63B
		R63C R63D
	Prä	A11A A11B A11C
		A11D
C95.01		AKBB
	15	MSPNG SPNG
	17	R50A R63A R63B
		R63C R63D
	Prä	A11A A11B A11C
		A11D
C95.8		AKBB
	Prä	961Z A11A A11B
		A11C A11D
C95.10		AKBB
	17	R61A R61B R61C
		R61D R61E
	Prä	A11A A11B A11C
		A11D
C95.11		AKBB
	17	R61A R61B R61C
		R61D R61E

ICD	MDC	DRG
	Prä	A11A A11B A11C
		A11D
C95.70		AKBB
	15	MSPNG SPNG
	17	R61A R61B R61C
		R61D R61E
	Prä	A11A A11B A11C
		A11D
C95.71		AKBB
	15	MSPNG SPNG
	17	R61A R61B R61C
		R61D R61E
	Prä	A11A A11B A11C
		A11D
C95.90		AKBB
	15	MSPNG SPNG
	17	R61A R61B R61C
		R61D R61E
	Prä	A11A A11B A11C
		A11D
C95.91		AKBB
	15	MSPNG SPNG
	17	R61A R61B R61C
		R61D R61E
	Prä	A11A A11B A11C
		A11D
C96.0		AKBB
	15	MSPNG SPNG
	17	R62A R62B
	Prä	A11A A11B A11C
		A11D
C96.2		AKBB
	15	MSPNG SPNG
	17	R61A R61B R61C
		R61D R61E
	Prä	A11A A11B A11C
		A11D
C96.4		AKBB
	15	MSPNG SPNG
	17	R61A R61B R61C
		R61D R61E
	Prä	A11A A11B A11C
		A11D
C96.5		AKBB
	10	K63A K63B
	Prä	A11C
C96.6		AKBB
	10	K63A K63B
	Prä	A11C
C96.7		AKBB
	15	MSPNG SPNG
	17	R61A R61B R61C
		R61D R61E
	Prä	A11A A11B A11C
		A11D
C96.8		AKBB
	08	I27C
	15	MSPNG SPNG
	17	R61A R61B R61C
		R61D R61E
	Prä	A11A A11B A11C
		A11D
C96.9		AKBB
	15	MSPNG SPNG
	17	R61A R61B R61C
		R61D R61E
	Prä	A11A A11B A11C
		A11D
C97		AKBB
	15	MSPNG SPNG

ICD	MDC	DRG
	Prä	961Z A11C
D00.0		AKBB
	03	D09A D09B D28Z
		D60A D60B
D00.1		AKBB
	06	G16A G16B G17B
		G19A G38A G38B
		G38C G46A G46B
		G60A G60B
D00.2		AKBB
	06	G16A G16B G17B
		G19A G38A G38B
		G38C G46A G46B
		G60A G60B
D01.0		AKBB
	06	G16A G16B G17B
		G19A G38A G38B
		G38C G46A G46B
		G60A G60B
D01.1		AKBB
	06	G16A G16B G17B
		G19A G38A G38B
		G38C G46A G46B
		G60A G60B
D01.2		AKBB
	06	G16A G16B G17B
		G19A G38A G38B
		G38C G46A G46B
		G60A G60B
D01.3		AKBB
	06	G16A G16B G17B
		G19A G38A G38B
		G38C G46A G46B
		G60A G60B
D01.4		AKBB
	06	G16A G16B G17B
		G19A G38A G38B
		G38C G46A G46B
		G60A G60B
D01.5		AKBB
	07	H09B H41C H61A
		H61B
D01.7		AKBB
	06	G16A G16B G17B
		G19A G38A G38B
		G38C G46A G46B
		G60A G60B
D01.9		AKBB
	06	G16A G16B G17B
		G19A G38A G38B
		G38C G46A G46B
		G60A G60B
D02.0		AKBB
	03	D09A D09B D28Z
		D60A D60B
D02.1		AKBB
	04	E05B E71A E71B
		E71C E86B
D02.2		AKBB
	04	E05B E71A E71B
		E71C E86B
D02.3		AKBB
	04	E05B E71A E71B
		E71C E86B
D02.4		AKBB
	04	E05B E71A E71B
		E71C E86B
D03.0		AKBB
	09	J01A J01B J67Z
D03.1		AKBB

ICD	MDC	DRG
	02	C29Z C63A C63B
		C63C
D03.2		AKBB
	09	J01A J01B J67Z
D03.3		AKBB
	09	J01A J01B J67Z
D03.4		AKBB
	09	J01A J01B J67Z
D03.5		AKBB
	09	J01A J01B J67Z
D03.6		AKBB
	09	J01A J01B J67Z
D03.7		AKBB
	09	J01A J01B J02A
		J02B J03A J03B
		J04Z J67Z
D03.8		AKBB
	09	J01A J01B J67Z
D03.9		AKBB
	09	J01A J01B J67Z
D04.0		AKBB
	09	J01A J01B J67Z
D04.1		AKBB
	02	C29Z C63A C63B
		C63C
D04.2		AKBB
	09	J01A J01B J67Z
D04.3		AKBB
	09	J01A J01B J67Z
D04.4		AKBB
	09	J01A J01B J67Z
D04.5		AKBB
	09	J01A J01B J67Z
D04.6		AKBB
	09	J01A J01B J67Z
D04.7		AKBB
	09	J01A J01B J02A
		J02B J03A J03B
		J04Z J67Z
D04.8		AKBB
	09	J01A J01B J67Z
D04.9		AKBB
	09	J01A J01B J67Z
D05.0		AKBB
	09	J01A J01B J02A
		J02B J06A J06B
		J08Z J14Z J23A
		J23B J25Z J62A
		J62B
D05.1		AKBB
	09	J01A J01B J02A
		J02B J06A J06B
		J08Z J14Z J23A
		J23B J25Z J62A
		J62B
D05.7		AKBB
	09	J01A J01B J02A
		J02B J06A J06B
		J08Z J14Z J23A
		J23B J25Z J62A
		J62B
D05.9		AKBB
	09	J01A J01B J02A
		J02B J06A J06B
		J08Z J14Z J23A
		J23B J25Z J62A
		J62B
D06.0		AKBB
	13	N62A N62B
D06.1		AKBB

DIAG

ICD	MDC	DRG
	13	N62A N62B
D06.7		AKBB
	13	N62A N62B
D06.9		AKBB
	13	N62A N62B
D07.0		AKBB
	13	N62A N62B
D07.1		AKBB
	13	N62A N62B
D07.2		AKBB
	13	N62A N62B
D07.3		AKBB
	13	N62A N62B
D07.4		AKBB
	12	M09A M09B M37Z
		M60A M60B
D07.5		AKBB
	12	M09A M09B M37Z
		M60A M60B
D07.6		AKBB
	12	M09A M09B M37Z
		M60A M60B
D09.0		AKBB
	11	L03Z L09A L10A
		L10B L13A L13B
		L13C L38Z L62A
		L62B
D09.1		AKBB
	11	L03Z L09A L10A
		L10B L13A L13B
		L13C L38Z L62A
		L62B
D09.2		AKBB
	02	C29Z C63A C63B
		C63C
D09.3		AKBB
	17	R62A R62B
D09.7		AKBB
	17	R62A R62B
D09.9	17	R62A R62B
D10.0	03	D40Z D67A D67B
	15	MSPNG SPNG
D10.1	03	D40Z D67A D67B
	15	MSPNG SPNG
D10.2	03	D40Z D67A D67B
	15	MSPNG SPNG
D10.3	03	D40Z D67A D67B
	15	MSPNG SPNG
D10.4	03	D66A D66B
D10.5	03	D66A D66B
	15	MSPNG SPNG
D10.6	03	D66A D66B
	15	MSPNG SPNG
D10.7	03	D66A D66B
	15	MSPNG SPNG
D10.9	03	D66A D66B
	15	MSPNG SPNG
D11.0	03	D05A D66A D66B
	15	MSPNG SPNG
D11.7	03	D66A D66B
	15	MSPNG SPNG
D11.9	03	D66A D66B
	15	MSPNG SPNG
D12.0	06	G71A G71B
	15	MSPNG SPNG
D12.1	06	G71A G71B
	15	MSPNG SPNG
D12.2	06	G71A G71B
	15	MSPNG SPNG
D12.3	06	G71A G71B

ICD	MDC	DRG
	15	MSPNG SPNG
D12.4	06	G71A G71B
	15	MSPNG SPNG
D12.5	06	G71A G71B
	15	MSPNG SPNG
D12.6	06	G71A G71B
	15	MSPNG SPNG
D12.7	06	G71A G71B
	15	MSPNG SPNG
D12.8	06	G71A G71B
	15	MSPNG SPNG
D12.9	06	G71A G71B
	15	MSPNG SPNG
D13.0	06	G71A G71B
	15	MSPNG SPNG
D13.1	06	G71A G71B
	15	MSPNG SPNG
D13.2	06	G71A G71B
	15	MSPNG SPNG
D13.3	06	G71A G71B
	15	MSPNG SPNG
D13.4	07	H63A H63B H63C
		H63D
	15	MSPNG SPNG
D13.5	07	H63A H63B H63C
		H63D
	15	MSPNG SPNG
D13.6	07	H62A H62B H62C
	15	MSPNG SPNG
D13.7	07	H62A H62B H62C
	15	MSPNG SPNG
D13.9	06	G71A G71B
	15	MSPNG SPNG
D14.0	03	D66A D66B
	15	MSPNG SPNG
D14.1	03	D66A D66B
	15	MSPNG SPNG
D14.2	04	E71A E71B E71C
	15	MSPNG SPNG
D14.3	04	E71A E71B E71C
	15	MSPNG SPNG
D14.4	04	E71A E71B E71C
	15	MSPNG SPNG
D15.0	15	MSPNG SPNG
	16	Q60A Q60B Q60C
D15.1	05	F75A F75B F75C
		F75D
	15	MSPNG SPNG
D15.2	04	E71A E71B E71C
	15	MSPNG SPNG
D15.7	04	E71A E71B E71C
	15	MSPNG SPNG
D15.9	04	E71A E71B E71C
	15	MSPNG SPNG
D16.0	08	I76A I76B
	15	MSPNG SPNG
D16.1	08	I02A I02B I02C
		I32A I32B I32C
		I32D I32E I32F
		I76A I76B
	15	MSPNG SPNG
D16.2	08	I76A I76B
	15	MSPNG SPNG
D16.3	08	I76A I76B
	15	MSPNG SPNG
D16.5	03	D40Z D67A D67B
	15	MSPNG SPNG
D16.6	08	I10B I76A I76B
	15	MSPNG SPNG
D16.8	08	I10B I76A I76B

ICD	MDC	DRG
	15	MSPNG SPNG
D16.9	08	I76A I76B
	15	MSPNG SPNG
D16.41	08	I10B I76A I76B
	15	MSPNG SPNG
D16.42	08	I76A I76B
	15	MSPNG SPNG
D16.70	08	I76A I76B
	15	MSPNG SPNG
D16.71	08	I76A I76B
	15	MSPNG SPNG
D16.72	08	I76A I76B
	15	MSPNG SPNG
D17.0	09	J67Z
D17.1	09	J67Z
D17.2	09	J67Z
D17.3	09	J67Z
D17.4	04	E71A E71B E71C
D17.5	06	G71A G71B
D17.6	12	M64Z
D17.7	09	J67Z
D17.9	09	J67Z
D18.00	09	J67Z
	15	MSPNG SPNG
D18.01	09	J67Z
D18.02	01	B66A B66B B66C
		B86B
D18.03	07	H63A H63B H63C
		H63D
D18.04	06	G67A G67B G67C
		G67D
D18.05	03	D66A D66B
D18.06	01	B81A B81B B81C
	15	MSPNG SPNG
D18.08	09	J67Z
D18.10	15	MSPNG SPNG
	16	Q60A Q60B Q60C
D18.11	15	MSPNG SPNG
	16	Q60A Q60B Q60C
D18.12	15	MSPNG SPNG
	16	Q60A Q60B Q60C
D18.13	15	MSPNG SPNG
	16	Q60A Q60B Q60C
D18.18	15	MSPNG SPNG
	16	Q60A Q60B Q60C
D18.19	15	MSPNG SPNG
	16	Q60A Q60B Q60C
D19.0	04	E71A E71B E71C
	15	MSPNG SPNG
D19.1	06	G71A G71B
	15	MSPNG SPNG
D19.7	15	MSPNG SPNG
	17	R62A R62B
D19.9	15	MSPNG SPNG
	17	R62A R62B
D20.0	06	G71A G71B
	15	MSPNG SPNG
D20.1	06	G71A G71B
	15	MSPNG SPNG
D21.0	03	D66A D66B
	15	MSPNG SPNG
D21.1	08	I02A I02B I02C
		I32A I32B I32C
		I32D I32E I32F
		I76A I76B
	15	MSPNG SPNG
D21.2	08	I76A I76B
	15	MSPNG SPNG
D21.3	04	E71A E71B E71C
	15	MSPNG SPNG

ICD	MDC	DRG
D21.4	06	G71A G71B
	15	MSPNG SPNG
D21.5	08	I76A I76B
	15	MSPNG SPNG
D21.6	08	I76A I76B
	15	MSPNG SPNG
D21.9	08	I76A I76B
	15	MSPNG SPNG
D22.0	09	J67Z
D22.1	02	C63A C63B C63C
D22.2	09	J67Z
D22.3	09	J67Z
D22.4	09	J67Z
D22.5	09	J67Z
D22.6	09	J67Z
D22.7	09	J02A J02B J03A
		J03B J04Z J67Z
D22.9	09	J67Z
D23.0	09	J67Z
D23.1	02	C63A C63B C63C
D23.2	09	J67Z
D23.3	09	J67Z
D23.4	09	J67Z
D23.5	09	J67Z
D23.6	09	J67Z
D23.7	09	J02A J02B J03A
		J03B J04Z J67Z
D23.9	09	J67Z
D24	09	J67Z
	15	MSPNG SPNG
D25.0	13	N23A N62A N62B
	15	MSPNG SPNG
D25.1	13	N23A N62A N62B
	15	MSPNG SPNG
D25.2	13	N23A N62A N62B
	15	MSPNG SPNG
D25.9	13	N23A N62A N62B
	15	MSPNG SPNG
D26.0	13	N62A N62B
	15	MSPNG SPNG
D26.1	13	N62A N62B
	15	MSPNG SPNG
D26.7	13	N62A N62B
D26.9	13	N62A N62B
	15	MSPNG SPNG
D27	13	N62A N62B
	15	MSPNG SPNG
D28.0	13	N62A N62B
	15	MSPNG SPNG
D28.1	13	N62A N62B
	15	MSPNG SPNG
D28.2	13	N62A N62B
	15	MSPNG SPNG
D28.7	13	N62A N62B
	15	MSPNG SPNG
D28.9	13	N62A N62B
	15	MSPNG SPNG
D29.0	12	M64Z
	15	MSPNG SPNG
D29.1	12	M64Z
	15	MSPNG SPNG
D29.2	12	M64Z
	15	MSPNG SPNG
D29.3	12	M64Z
	15	MSPNG SPNG
D29.4	12	M64Z
	15	MSPNG SPNG
D29.7	12	M64Z
	15	MSPNG SPNG
D29.9	12	M64Z

ICD	MDC	DRG
	15	MSPNG SPNG
D30.0	11	L03Z L09A L10A
		L10B L13A L13B
		L13C L38Z L62A
		L62B
	15	MSPNG SPNG
D30.1	11	L03Z L09A L10A
		L10B L13A L13B
		L13C L38Z L62A
		L62B
	15	MSPNG SPNG
D30.2	11	L03Z L09A L10A
		L10B L13A L13B
		L13C L38Z L62A
		L62B
	15	MSPNG SPNG
D30.3	11	L03Z L09A L10A
		L10B L13A L13B
		L13C L38Z L62A
		L62B
	15	MSPNG SPNG
D30.4	11	L03Z L09A L10A
		L10B L13A L13B
		L13C L38Z L62A
		L62B
	15	MSPNG SPNG
D30.7	11	L03Z L09A L10A
		L10B L13A L13B
		L13C L38Z L62A
		L62B
	15	MSPNG SPNG
D30.9	11	L03Z L09A L10A
		L10B L13A L13B
		L13C L38Z L62A
		L62B
	15	MSPNG SPNG
D31.0	02	C63A C63B C63C
	15	MSPNG SPNG
D31.1	02	C63A C63B C63C
	15	MSPNG SPNG
D31.2	02	C63A C63B C63C
	15	MSPNG SPNG
D31.3	02	C63A C63B C63C
	15	MSPNG SPNG
D31.4	02	C63A C63B C63C
	15	MSPNG SPNG
D31.5	02	C63A C63B C63C
	15	MSPNG SPNG
D31.6	01	B81A B81B B81C
	15	MSPNG SPNG
D31.9	02	C63A C63B C63C
	15	MSPNG SPNG
D32.0	01	B66A B66B B66C
		B86B
	15	MSPNG SPNG
	Prä	A11C
D32.1	01	B66A B66B B66C
		B86B
	15	MSPNG SPNG
	Prä	A11C
D32.9	01	B81A B81B B81C
	15	MSPNG SPNG
	Prä	A11C
D33.0	01	B66A B66B B66C
		B86B
	15	MSPNG SPNG
	Prä	A11C
D33.1	01	B66A B66B B66C
		B86B
	15	MSPNG SPNG

ICD	MDC	DRG
	Prä	A11C
D33.2	01	B81A B81B B81C
	15	MSPNG SPNG
	Prä	A11C
D33.3	01	B66A B66B B66C
		B86B
	15	MSPNG SPNG
	Prä	A11C
D33.4	01	B66A B66B B66C
		B86B
	15	MSPNG SPNG
	Prä	A11C
D33.7	01	B66A B66B B66C
		B81A B81B B81C
		B86B
	15	MSPNG SPNG
	Prä	A11C
D33.9	01	B81A B81B B81C
	15	MSPNG SPNG
	Prä	A11C
D34	10	K64A K64B K64C
	15	MSPNG SPNG
D35.0	10	K64A K64B K64C
	15	MSPNG SPNG
D35.1	10	K64A K64B K64C
	15	MSPNG SPNG
D35.2	01	B66A B66B B66C
		B86B
	15	MSPNG SPNG
D35.3	01	B66A B66B B66C
		B86B
	15	MSPNG SPNG
D35.4	01	B66A B66B B66C
		B86B
	15	MSPNG SPNG
D35.5	01	B66A B66B B66C
		B86B
	15	MSPNG SPNG
D35.6	01	B66A B66B B66C
		B86B
	15	MSPNG SPNG
D35.7	10	K64A K64B K64C
	15	MSPNG SPNG
D35.8	10	K64A K64B K64C
	15	MSPNG SPNG
D35.9	10	K64A K64B K64C
	15	MSPNG SPNG
D36.0	15	MSPNG SPNG
	16	Q60A Q60B Q60C
D36.1	01	B66A B66B B66C
		B86B
	15	MSPNG SPNG
D36.7	15	MSPNG SPNG
	17	R62A R62B
D36.9	15	MSPNG SPNG
	17	R62A R62B
D37.0		AKBB
	03	D09A D09B D28Z
		D60A D60B
	15	MSPNG SPNG
D37.1		AKBB
	06	G16A G16B G17B
		G19A G38A G38B
		G38C G60A G60B
	15	MSPNG SPNG
D37.2		AKBB
	06	G16A G16B G17B
		G19A G38A G38B
		G38C G60A G60B
	15	MSPNG SPNG

DIAG

ICD	MDC	DRG
D37.3		AKBB
	06	G16A G16B G17B G19A G38A G38B G38C G60A G60B
	15	MSPNG SPNG
D37.4		AKBB
	06	G16A G16B G17B G19A G38A G38B G38C G60A G60B
	15	MSPNG SPNG
D37.5		AKBB
	06	G16A G16B G17B G19A G38A G38B G38C G60A G60B
	15	MSPNG SPNG
D37.6		AKBB
	07	H09B H41C H61A H61B
	15	MSPNG SPNG
D37.9		AKBB
	06	G16A G16B G17B G19A G38A G38B G38C G60A G60B
	15	MSPNG SPNG
D37.70		AKBB
	07	H09B H41C H61A H61B
	15	MSPNG SPNG
D37.78		AKBB
	06	G16A G16B G17B G19A G38A G38B G38C G60A G60B
	15	MSPNG SPNG
D38.0		AKBB
	03	D09A D09B D28Z D60A D60B
	15	MSPNG SPNG
D38.1		AKBB
	04	E05B E71A E71B E71C E86B
	15	MSPNG SPNG
D38.2		AKBB
	04	E05B E71A E71B E71C E86B
	15	MSPNG SPNG
D38.3		AKBB
	04	E05B E71A E71B E71C E86B
	15	MSPNG SPNG
D38.4		AKBB
	04	E05B E71A E71B E71C E86B
	15	MSPNG SPNG
D38.5		AKBB
	04	E05B E71A E71B E71C E86B
	15	MSPNG SPNG
D38.6		AKBB
	04	E05B E71A E71B E71C E86B
	15	MSPNG SPNG
D39.0		AKBB
	13	N01A N01B N01C N01D N01E N02A N02B N33Z N60A N60B
	15	MSPNG SPNG
D39.1		AKBB
	13	N01A N01B N01C N01D N01E N02A N02B N02C N33Z N60A N60B
	15	MSPNG SPNG
D39.2		AKBB
	13	N01A N01B N01C N01D N01E N02A N02B N33Z N60A N60B
	15	MSPNG SPNG
D39.7		AKBB
	13	N01A N01B N01C N01D N01E N02A N02B N33Z N60A N60B
	15	MSPNG SPNG
D39.9		AKBB
	13	N01A N01B N01C N01D N01E N02A N02B N33Z N60A N60B
	15	MSPNG SPNG
D40.0		AKBB
	12	M09A M09B M37Z M60A M60B
	15	MSPNG SPNG
D40.1		AKBB
	12	M09A M09B M37Z M60A M60B
	15	MSPNG SPNG
D40.7		AKBB
	12	M09A M09B M37Z M60A M60B
	15	MSPNG SPNG
D40.9		AKBB
	12	M09A M09B M37Z M60A M60B
	15	MSPNG SPNG
D41.0		AKBB
	11	L03Z L09A L10A L10B L13A L13B L13C L38Z L62A L62B
	15	MSPNG SPNG
D41.1		AKBB
	11	L03Z L09A L10A L10B L13A L13B L13C L38Z L62A L62B
	15	MSPNG SPNG
D41.2		AKBB
	11	L03Z L09A L10A L10B L13A L13B L13C L38Z L62A L62B
	15	MSPNG SPNG
D41.3		AKBB
	11	L03Z L09A L10A L10B L13A L13B L13C L38Z L62A L62B
	15	MSPNG SPNG
D41.4		AKBB
	11	L03Z L09A L10A L10B L13A L13B L13C L38Z L62A L62B
	15	MSPNG SPNG
D41.7		AKBB
	11	L03Z L09A L10A L10B L13A L13B L13C L38Z L62A L62B
	15	MSPNG SPNG
D41.9		AKBB
	11	L03Z L09A L10A L10B L13A L13B L13C L38Z L62A L62B
	15	MSPNG SPNG
D42.0		AKBB
	01	B66A B66B B66C B86B
	15	MSPNG SPNG
D42.1		AKBB
	01	B66A B66B B66C B86B
	15	MSPNG SPNG
D42.9		AKBB
	01	B81A B81B B81C
	15	MSPNG SPNG
D43.0		AKBB
	01	B66A B66B B66C B86B
	15	MSPNG SPNG
D43.1		AKBB
	01	B66A B66B B66C B86B
	15	MSPNG SPNG
D43.2		AKBB
	01	B81A B81B B81C
	15	MSPNG SPNG
D43.3		AKBB
	01	B66A B66B B66C B86B
	15	MSPNG SPNG
D43.4		AKBB
	01	B66A B66B B66C B86B
	15	MSPNG SPNG
D43.7		AKBB
	01	B66A B66B B66C B86B
	15	MSPNG SPNG
D43.9		AKBB
	01	B81A B81B B81C
	15	MSPNG SPNG
D44.0		AKBB
	10	K64A K64B K64C
	15	MSPNG SPNG
D44.1		AKBB
	10	K03Z K64A K64B K64C
	15	MSPNG SPNG
D44.2		AKBB
	10	K64A K64B K64C
	15	MSPNG SPNG
D44.3		AKBB
	01	B66A B66B B66C B86B
	15	MSPNG SPNG
D44.4		AKBB
	01	B66A B66B B66C B86B
	15	MSPNG SPNG
D44.5		AKBB
	01	B66A B66B B66C B86B
	15	MSPNG SPNG
D44.6		AKBB
	01	B66A B66B B66C

ICD	MDC	DRG
		B86B
	15	MSPNG SPNG
D44.7		AKBB
	01	B66A B66B B66C
		B86B
	15	MSPNG SPNG
D44.8		AKBB
	10	K64A K64B K64C
D44.9		AKBB
	10	K64A K64B K64C
	15	MSPNG SPNG
D45	15	MSPNG SPNG
	17	R61A R61B R61C
		R61D R61E
	Prä	A11C
D46.0	15	MSPNG SPNG
	17	R61A R61B R61C
		R61D R61E
	Prä	A11C
D46.1	15	MSPNG SPNG
	17	R61A R61B R61C
		R61D R61E
	Prä	A11C
D46.2	15	MSPNG SPNG
	17	R50A R60A R60B
		R60C R60D
	Prä	A11C A93A A97A
		A97B A97C A97D
D46.4	15	MSPNG SPNG
	17	R61A R61B R61C
		R61D R61E
	Prä	A11C
D46.5	15	MSPNG SPNG
	17	R61A R61B R61C
		R61D R61E
	Prä	A11C
D46.6	15	MSPNG SPNG
	17	R61A R61B R61C
		R61D R61E
	Prä	A11C
D46.7	15	MSPNG SPNG
	17	R61A R61B R61C
		R61D R61E
	Prä	A11C
D46.9	15	MSPNG SPNG
	17	R61A R61B R61C
		R61D R61E
	Prä	A11C
D47.0	15	MSPNG SPNG
	17	R61A R61B R61C
		R61D R61E
	Prä	A11C
D47.1	15	MSPNG SPNG
	17	R61A R61B R61C
		R61D R61E
	Prä	A11A A11B A11C
		A11D
D47.2	15	MSPNG SPNG
	16	Q60A Q60B Q60C
D47.3	15	MSPNG SPNG
	17	R61A R61B R61C
		R61D R61E
D47.4	15	MSPNG SPNG
	17	R61A R61B R61C
		R61D R61E
	Prä	A11C
D47.5	15	MSPNG SPNG
	17	R61A R61B R61C
		R61D R61E
D47.7	15	MSPNG SPNG

ICD	MDC	DRG
	17	R61A R61B R61C
		R61D R61E
D47.9	15	MSPNG SPNG
	17	R61A R61B R61C
		R61D R61E
D48.0	08	I13A I13B I29B
		I65A I65B
	15	MSPNG SPNG
D48.1	08	I13A I13B I29B
		I65A I65B
	15	MSPNG SPNG
D48.2	08	I13A I13B I29B
		I65A I65B
	15	MSPNG SPNG
D48.3	06	G16A G16B G17B
		G19A G38A G38B
		G38C G60A G60B
	15	MSPNG SPNG
D48.4	06	G16A G16B G17B
		G19A G38A G38B
		G38C G60A G60B
	15	MSPNG SPNG
D48.5	09	J67Z
	15	MSPNG SPNG
D48.6	09	J67Z
	15	MSPNG SPNG
D48.7	15	MSPNG SPNG
	17	R62A R62B
D48.9	15	MSPNG SPNG
	17	R62A R62B
D50.0	16	Q61A Q61B Q61C
D50.1	16	Q61A Q61B Q61C
D50.8	16	Q61A Q61B Q61C
D50.9	16	Q61A Q61B Q61C
D51.0	16	Q61A Q61B Q61C
D51.1	16	Q61A Q61B Q61C
D51.2	16	Q61A Q61B Q61C
D51.3	16	Q61A Q61B Q61C
D51.8	16	Q61A Q61B Q61C
D51.9	16	Q61A Q61B Q61C
D52.0	16	Q61A Q61B Q61C
D52.1	16	Q61A Q61B Q61C
D52.8	16	Q61A Q61B Q61C
D52.9	16	Q61A Q61B Q61C
D53.0	16	Q61A Q61B Q61C
D53.1	16	Q61A Q61B Q61C
D53.2	16	Q61A Q61B Q61C
D53.8	16	Q61A Q61B Q61C
D53.9	16	Q61A Q61B Q61C
D55.0	15	MSPNG SPNG
	16	Q61A Q61B Q61C
D55.1	15	MSPNG SPNG
	16	Q61A Q61B Q61C
D55.2	16	Q61A Q61B Q61C
D55.3	16	Q61A Q61B Q61C
D55.8	16	Q61A Q61B Q61C
D55.9	16	Q61A Q61B Q61C
D56.0	16	Q61A Q61B Q61C
D56.1	16	Q61A Q61B Q61C
D56.2	16	Q61A Q61B Q61C
D56.3	16	Q61A Q61B Q61C
D56.4	16	Q61A Q61B Q61C
D56.8	16	Q61A Q61B Q61C
D56.9	16	Q61A Q61B Q61C
D57.0	15	MSPNG SPNG
	16	Q61A Q61B Q61C
D57.1	16	Q61A Q61B Q61C
D57.2	16	Q61A Q61B Q61C
D57.3	16	Q61A Q61B Q61C
D57.8	16	Q61A Q61B Q61C

ICD	MDC	DRG
D58.0	16	Q61A Q61B Q61C
D58.1	16	Q61A Q61B Q61C
D58.2	16	Q61A Q61B Q61C
D58.8	16	Q61A Q61B Q61C
D58.9	16	Q61A Q61B Q61C
D59.0	16	Q61A Q61B Q61C
D59.1	16	Q61A Q61B Q61C
D59.2	16	Q61A Q61B Q61C
D59.3	11	L37A L37B L72Z
	15	MSPNG SPNG
D59.4	16	Q61A Q61B Q61C
D59.5	16	Q61A Q61B Q61C
D59.6	16	Q61A Q61B Q61C
D59.8	16	Q61A Q61B Q61C
D59.9	16	Q61A Q61B Q61C
D60.0	15	MSPNG SPNG
	16	Q61A Q61B Q61C
	Prä	A11C
D60.1	15	MSPNG SPNG
	16	Q61A Q61B Q61C
	Prä	A11C
D60.8	15	MSPNG SPNG
	16	Q61A Q61B Q61C
	Prä	A11C
D60.9	15	MSPNG SPNG
	16	Q61A Q61B Q61C
	Prä	A11C
D61.0	15	MSPNG SPNG
	16	Q61A Q61B Q61C
	Prä	A11C
D61.2	15	MSPNG SPNG
	16	Q61A Q61B Q61C
	Prä	A11C
D61.3	15	MSPNG SPNG
	16	Q61A Q61B Q61C
	Prä	A11C
D61.8	15	MSPNG SPNG
	16	Q61A Q61B Q61C
	Prä	A11C
D61.9	15	MSPNG SPNG
	16	Q61A Q61B Q61C
D61.10	15	MSPNG SPNG
	16	Q61A Q61B Q61C
	Prä	A11C
D61.18	15	MSPNG SPNG
	16	Q61A Q61B Q61C
	Prä	A11C
D61.19	15	MSPNG SPNG
	16	Q61A Q61B Q61C
	Prä	A11C
D62	14	O50A O50B O60A
		O60B
	16	Q61A Q61B Q61C
D63.0	Prä	961Z
D63.8	Prä	961Z
D64.0	15	MSPNG SPNG
	16	Q61A Q61B Q61C
D64.1	15	MSPNG SPNG
	16	Q61A Q61B Q61C
D64.2	15	MSPNG SPNG
	16	Q61A Q61B Q61C
D64.3	15	MSPNG SPNG
	16	Q61A Q61B Q61C
D64.4	16	Q61A Q61B Q61C
D64.8	16	Q61A Q61B Q61C
D64.9	16	Q61A Q61B Q61C
D65.0	06	G67C
	07	H63A
	16	Q60A Q60B Q60C
D65.1		KP KPP

DIAG

ICD	MDC	DRG
	06	G67C
	07	H63A
	16	Q60A Q60B Q60C
	Prä	A11C
D65.2		KP KPP
	06	G67C
	07	H63A
	16	Q60A Q60B Q60C
	Prä	A11C
D65.9	16	Q60A Q60B Q60C
D66	06	G67C
	07	H63A
	15	MSPNG SPNG
	16	Q60A Q60B Q60C
	Prä	A11C
D67	06	G67C
	07	H63A
	15	MSPNG SPNG
	16	Q60A Q60B Q60C
	Prä	A11C
D68.00	06	G67C
	07	H63A
	15	MSPNG SPNG
	16	Q60A Q60B Q60C
	Prä	A11C
D68.01	06	G67C
	07	H63A
	15	MSPNG SPNG
	16	Q60A Q60B Q60C
	Prä	A11C
D68.1	06	G67C
	07	H63A
	15	MSPNG SPNG
	16	Q60A Q60B Q60C
	Prä	A11C
D68.4	06	G67C
	07	H63A
	16	Q60A Q60B Q60C
D68.5	Prä	A11C
	06	G67C
	07	H63A
	16	Q60A Q60B Q60C
D68.6	Prä	A11C
	06	G67C
	16	Q60A Q60B Q60C
D68.8	Prä	A11C
	06	G67C
	16	Q60A Q60B Q60C
D68.09	06	G67C
	07	H63A
	15	MSPNG SPNG
	16	Q60A Q60B Q60C
	Prä	A11C
D68.9	16	Q60A Q60B Q60C
D68.20	06	G67C
	07	H63A
	15	MSPNG SPNG
	16	Q60A Q60B Q60C
	Prä	A11C
D68.21	06	G67C
	07	H63A
	15	MSPNG SPNG
	16	Q60A Q60B Q60C
	Prä	A11C
D68.22	06	G67C
	07	H63A
	15	MSPNG SPNG
	16	Q60A Q60B Q60C
	Prä	A11C
D68.23	06	G67C
	07	H63A
	15	MSPNG SPNG
	16	Q60A Q60B Q60C
	Prä	A11C
D68.24	06	G67C
	07	H63A
	15	MSPNG SPNG
	16	Q60A Q60B Q60C
	Prä	A11C
D68.25	06	G67C
	07	H63A
	15	MSPNG SPNG
	16	Q60A Q60B Q60C
	Prä	A11C
D68.26	06	G67C
	07	H63A
	15	MSPNG SPNG
	16	Q60A Q60B Q60C
	Prä	A11C
D68.28	06	G67C
	07	H63A
	15	MSPNG SPNG
	16	Q60A Q60B Q60C
	Prä	A11C
D68.31	06	G67C
	07	H63A
	15	MSPNG SPNG
	16	Q60A Q60B Q60C
	Prä	A11C
D68.32	06	G67C
	07	H63A
	15	MSPNG SPNG
	16	Q60A Q60B Q60C
	Prä	A11C
D68.33	06	G67C
	15	MSPNG SPNG
	16	Q60A Q60B Q60C
	Prä	A11C
D68.34	06	G67C
	15	MSPNG SPNG
	16	Q60A Q60B Q60C
	Prä	A11C
D68.35	06	G67C
	15	MSPNG SPNG
	16	Q60A Q60B Q60C
	Prä	A11C
D68.38	06	G67C
	07	H63A
	15	MSPNG SPNG
	16	Q60A Q60B Q60C
	Prä	A11C
D69.0	16	Q60A Q60B Q60C
		Q61B
D69.1	Prä	A11C
	06	G67C
	07	H63A
	16	Q60A Q60B Q60C
		Q61B
D69.2	Prä	A11C
	16	Q60A Q60B Q60C
D69.3	Prä	A11C
	06	G67C
	07	H63A
	16	Q60A Q60B Q60C
		Q61B
D69.9	15	MSPNG SPNG
	16	Q60A Q60B Q60C
D69.40	Prä	A11C
	06	G67C
	07	H63A
	16	Q60A Q60B Q60C
		Q61B
D69.41	Prä	A11C
	06	G67C
	07	H63A
	16	Q60A Q60B Q60C
D69.52	Prä	A11C
	06	G67C
	07	H63A
	16	Q60A Q60B Q60C
D69.53		KP KPP
	06	G67C
	07	H63A
	16	Q60A Q60B Q60C
	Prä	A11C
D69.57	Prä	A11C
	06	G67C
	07	H63A
	16	Q60A Q60B Q60C
		Q61B
D69.58	Prä	A11C
	06	G67C
	07	H63A
	16	Q60A Q60B Q60C
D69.59	Prä	A11C
	16	Q60A Q60B Q60C
D69.60	Prä	A11C
	16	Q60A Q60B Q60C
D69.61	Prä	A11C
	16	Q60A Q60B Q60C
D69.80	Prä	A11C
	06	G67C
	16	Q60A Q60B Q60C
D69.88	Prä	A11C
	06	G67C
	16	Q60A Q60B Q60C
D70.0	15	MSPNG SPNG
	16	Q60A Q60B Q60C
		Q61B
	17	R50A R60A R60B
		R60C R60D R62A
		R62B R63A R63B
		R63C R63D
	Prä	A11C A93A A97A
		A97B A97C A97D
D70.3	15	MSPNG SPNG
	16	Q60A Q60B Q60C
	17	R50A R60A R60B
		R60C R60D R62A
		R62B R63A R63B
		R63C R63D
	Prä	A11C A93A A97A
		A97B A97C A97D
D70.5	15	MSPNG SPNG
	16	Q60A Q60B Q60C
	17	R50A R60A R60B
		R60C R60D R62A
		R62B R63A R63B
		R63C R63D
	Prä	A11C A93A A97A
		A97B A97C A97D
D70.6	15	MSPNG SPNG
	16	Q60A Q60B Q60C
		Q61B
	17	R50A R60A R60B
		R60C R60D R62A
		R62B R63A R63B
		R63C R63D
	Prä	A11C A93A A97A
		A97B A97C A97D

ICD	MDC	DRG
D70.7	15	MSPNG SPNG
	16	Q60A Q60B Q60C
	17	R50A R60A R60B
		R60C R60D R62A
		R62B R63A R63B
		R63C R63D
	Prä	A11C A93A A97A
		A97B A97C A97D
D70.10	15	MSPNG SPNG
	16	Q60A Q60B Q60C
	17	R50A R60A R60B
		R60C R60D R62A
		R62B R63A R63B
		R63C R63D
	Prä	A11C A93A A97A
		A97B A97C A97D
D70.11	15	MSPNG SPNG
	16	Q60A Q60B Q60C
		Q61B
	17	R50A R60A R60B
		R61A R61B R62A
		R63A R63B R63C
	Prä	A11C A93A A97A
		A97B A97C A97D
D70.12		HAK
	15	MSPNG SPNG
	16	Q60A Q60B Q60C
		Q61B
	17	R50A R60A R60B
		R61A R61B R62A
		R63A R63B R63C
	Prä	A11C A93A A97A
		A97B A97C A97D
D70.13	15	MSPNG SPNG
	16	Q60A Q60B Q60C
		Q61B
	17	R50A R60A R60B
		R60C R60D R62A
		R62B R63A R63B
		R63C R63D
	Prä	A11C A93A A97A
		A97B A97C A97D
D70.14	15	MSPNG SPNG
	16	Q60A Q60B Q60C
		Q61B
	17	R50A R60A R60B
		R60C R60D R62A
		R62B R63A R63B
		R63C R63D
	Prä	A11C A93A A97A
		A97B A97C A97D
D70.18	15	MSPNG SPNG
	16	Q60A Q60B Q60C
	17	R50A R60A R60B
		R60C R60D R62A
		R62B R63A R63B
		R63C R63D
	Prä	A11C A93A A97A
		A97B A97C A97D
D70.19	15	MSPNG SPNG
	16	Q60A Q60B Q60C
	17	R50A R60A R60B
		R60C R60D R62A
		R62B R63A R63B
		R63C R63D
	Prä	A11C A93A A97A
		A97B A97C A97D
D71	Prä	A11C
	16	Q60A Q60B Q60C
		Q61B
D72.0	Prä	A11C
	16	Q60A Q60B Q60C
		Q61B
D72.1	16	Q60A Q60B Q60C
D72.8	16	Q60A Q60B Q60C
D72.9	16	Q60A Q60B Q60C
D73.0	Prä	A11C
	16	Q60A Q60B Q60C
		Q61B
D73.1	Prä	A11C
	16	Q60A Q60B Q60C
		Q61B
D73.2	Prä	A11C
	16	Q60A Q60B Q60C
		Q61B
D73.3	Prä	A11C
	16	Q60A Q60B Q60C
		Q61B
D73.4	16	Q60A Q60B Q60C
D73.5	Prä	A11C
	16	Q60A Q60B Q60C
		Q61B
D73.8	16	Q60A Q60B Q60C
D73.9	16	Q60A Q60B Q60C
D74.0	Prä	A11C
	16	Q61A Q61B
D74.8	Prä	A11C
	16	Q61A Q61B Q61C
D74.9	Prä	A11C
	16	Q61A Q61B Q61C
D75.0	Prä	A11C
	16	Q60A Q60B Q60C
D75.1	Prä	A11C
	16	Q60A Q60B Q60C
D75.8	Prä	A11C
	16	Q60A Q60B Q60C
D75.9	Prä	A11C
	16	Q60A Q60B Q60C
D76.1	Prä	A11A A11B A11C
		A11D
	17	R50A R61A R61B
		R61C R63A R63B
		R63C
D76.2	Prä	A11A A11B A11C
		A11D
	17	R50A R61A R61B
		R61C R63A R63B
		R63C
D76.3	Prä	A11C
	10	K63A K63B
D76.4	Prä	A11A A11B A11C
		A11D
	17	R50A R61A R61B
		R61C R63A R63B
		R63C
D77	Prä	961Z A11C
D80.0	15	MSPNG SPNG
	16	Q60A Q60B Q60C
	Prä	A11C
D80.1	Prä	A11C
	16	Q60A Q60B Q60C
D80.2	15	MSPNG SPNG
	16	Q60A Q60B Q60C
	Prä	A11C
D80.3	15	MSPNG SPNG
	16	Q60A Q60B Q60C
	Prä	A11C
D80.4	15	MSPNG SPNG
	16	Q60A Q60B Q60C
	Prä	A11C
D80.5	15	MSPNG SPNG
	16	Q60A Q60B Q60C
	Prä	A11C
D80.6	Prä	A11C
	16	Q60A Q60B Q60C
D80.7	Prä	A11C
	16	Q60A Q60B Q60C
D80.8	Prä	A11C
	16	Q60A Q60B Q60C
D80.9	Prä	A11C
	16	Q60A Q60B Q60C
D81.0	15	MSPNG SPNG
	16	Q60A Q60B Q60C
	Prä	A11C
D81.1	15	MSPNG SPNG
	16	Q60A Q60B Q60C
	Prä	A11C
D81.2	15	MSPNG SPNG
	16	Q60A Q60B Q60C
	Prä	A11C
D81.3	10	K63A K63B
	15	MSPNG SPNG
	Prä	A11C
D81.4	15	MSPNG SPNG
	16	Q60A Q60B Q60C
	Prä	A11C
D81.5	10	K63A K63B
	15	MSPNG SPNG
	Prä	A11C
D81.6	15	MSPNG SPNG
	16	Q60A Q60B Q60C
	Prä	A11C
D81.7	15	MSPNG SPNG
	16	Q60A Q60B Q60C
	Prä	A11C
D81.8	15	MSPNG SPNG
	16	Q60A Q60B Q60C
	Prä	A11C
D81.9	15	MSPNG SPNG
	16	Q60A Q60B Q60C
	Prä	A11C
D82.0	06	G67C
	07	H63A
	15	MSPNG SPNG
	16	Q60A Q60B Q60C
	Prä	A11C
D82.1	15	MSPNG SPNG
	16	Q60A Q60B Q60C
	Prä	A11C
D82.2	Prä	A11C
	16	Q60A Q60B Q60C
D82.3	Prä	A11C
	16	Q60A Q60B Q60C
D82.4	Prä	A11C
	16	Q60A Q60B Q60C
D82.8	Prä	A11C
	16	Q60A Q60B Q60C
D82.9	Prä	A11C
	16	Q60A Q60B Q60C
D83.0	15	MSPNG SPNG
	16	Q60A Q60B Q60C
	Prä	A11C
D83.1	15	MSPNG SPNG
	16	Q60A Q60B Q60C
	Prä	A11C
D83.2	15	MSPNG SPNG
	16	Q60A Q60B Q60C
	Prä	A11C
D83.8	15	MSPNG SPNG
	16	Q60A Q60B Q60C

DIAG

ICD	MDC	DRG
	Prä	A11C
D83.9	15	MSPNG SPNG
	16	Q60A Q60B Q60C
	Prä	A11C
D84.0	Prä	A11C
	16	Q60A Q60B Q60C
D84.1	Prä	A11C
	16	Q60A Q60B Q60C
D84.8	Prä	A11C
	16	Q60A Q60B Q60C
D84.9	Prä	A11C
	16	Q60A Q60B Q60C
D86.0	Prä	A11C
	04	E60A E60B E74Z
D86.1	Prä	A11C
	04	E60A E60B E74Z
D86.2	Prä	A11C
	04	E60A E60B E74Z
D86.3	Prä	A11C
	09	J64A J64B J64C
		J64D
D86.8	Prä	A11C
	04	E60A E60B E74Z
D86.9	Prä	A11C
	04	E60A E60B E74Z
D89.0	15	MSPNG SPNG
	16	Q60A Q60B Q60C
	Prä	A11C
D89.1	15	MSPNG SPNG
	17	R61A R61B R61C
		R61D R61E
	Prä	A11C
D89.2	Prä	A11C
	16	Q60A Q60B Q60C
D89.3	Prä	A11C
	16	Q60A Q60B Q60C
D89.8	Prä	A11C
	16	Q60A Q60B Q60C
D89.9	Prä	A11C
	16	Q60A Q60B Q60C
D90	Prä	A11C
	16	Q60A Q60B Q60C
E00.0	10	K09A K09B K64A
		K64B K64C
	15	MSPNG SPNG
E00.1	10	K09A K09B K64A
		K64B K64C
	15	MSPNG SPNG
E00.2	10	K09A K09B K64A
		K64B K64C
	15	MSPNG SPNG
E00.9	10	K09A K09B K64A
		K64B K64C
	15	MSPNG SPNG
E01.0	10	K09A K09B K64A
		K64B K64C
E01.1	10	K09A K09B K64A
		K64B K64C
E01.2	10	K09A K09B K64A
		K64B K64C
E01.8	10	K09A K09B K64A
		K64B K64C
	15	MSPNG SPNG
E02	10	K09A K09B K64A
		K64B K64C
	15	MSPNG SPNG
E03.0	10	K09A K09B K64A
		K64B K64C
	15	MSPNG SPNG
E03.1	10	K09A K09B K64A
		K64B K64C
	15	MSPNG SPNG
E03.2	10	K09A K09B K64A
		K64B K64C
E03.3	10	K09A K09B K64A
		K64B K64C
E03.4	10	K09A K09B K64A
		K64B K64C
E03.5	01	B66A B66B B66C
	15	MSPNG SPNG
E03.8	10	K09A K09B K64A
		K64B K64C
E03.9	10	K09A K09B K64A
		K64B K64C
E04.0	10	K09A K09B K64A
		K64B K64C
E04.1	10	K09A K09B K64A
		K64B K64C
E04.2	10	K09A K09B K64A
		K64B K64C
E04.8	10	K09A K09B K64A
		K64B K64C
E04.9	10	K09A K09B K64A
		K64B K64C
E05.0	10	K09A K09B K64A
		K64B K64C
E05.1	10	K09A K09B K64A
		K64B K64C
E05.2	10	K09A K09B K64A
		K64B K64C
E05.3	10	K09A K09B K64A
		K64B K64C
E05.4	10	K09A K09B K64A
		K64B K64C
E05.5	10	K09A K09B K64A
		K64B
E05.8	10	K09A K09B K64A
		K64B K64C
E05.9	10	K09A K09B K64A
		K64B K64C
E06.0	10	K09A K09B K64A
		K64B K64C
	15	MSPNG SPNG
E06.1	10	K09A K09B K64A
		K64B K64C
E06.2	10	K09A K09B K64A
		K64B K64C
E06.3	10	K09A K09B K64A
		K64B K64C
E06.4	10	K09A K09B K64A
		K64B K64C
	15	MSPNG SPNG
E06.5	10	K09A K09B K64A
		K64B K64C
E06.9	10	K09A K09B K64A
		K64B K64C
E07.0	10	K09A K09B K64A
		K64B K64C
E07.1	10	K09A K09B K64A
		K64B K64C
	15	MSPNG SPNG
E07.8	10	K09A K09B K64A
		K64B K64C
E07.9	10	K09A K09B K64A
		K64B K64C
E10.01	09	J60A
	10	K60A K60B K60C
		K60D K60E
E10.11	09	J60A
	10	K60A K60B K60C
		K60D K60E
E10.20	09	J60A
	11	L69A L69B
E10.21	09	J60A
	11	L69A L69B
E10.30	02	C63A C63B
	09	J60A
E10.31	02	C63A C63B
	09	J60A
E10.40	01	B71A B71B B71C
	09	J60A
E10.41	01	B71A B71B B71C
	09	J60A
E10.50	05	F04Z F13A F13B
		F13C F75A F75B
		F75C F75D
	09	J60A
E10.51	05	F04Z F13A F13B
		F13C F75A F75B
		F75C F75D
	09	J60A
E10.60	05	F04Z F13A F13B
		F13C
	09	J60A
	10	K09A K60A K60B
		K60C K60D K60E
E10.61	05	F04Z F13A F13B
		F13C
	09	J60A
	10	K09A K60A K60B
		K60C K60D K60E
E10.72	05	F04Z F13A F13B
		F13C
	09	J60A
	10	K09A K60A K60B
		K60C K60D K60E
E10.73	05	F04Z F13A F13B
		F13C
	09	J60A
	10	K09A K60A K60B
		K60C K60D K60E
E10.74	05	F04Z F13A F13B
		F13C
	09	J60A
	10	K09A K60A K60B
		K60C K60D K60E
E10.75	05	F04Z F13A F13B
		F13C
	09	J60A
	10	K09A K60A K60B
		K60C K60D K60E
E10.80	09	J60A
	10	K60A K60B K60C
		K60D K60E
E10.81	09	J60A
	10	K60A K60B K60C
		K60D K60E
E10.90	09	J60A
	10	K60A K60B K60C
		K60D K60E
E10.91	09	J60A
	10	K60A K60B K60C
		K60D K60E
E11.01	09	J60A
	10	K60A K60B K60C
		K60D K60E
E11.11	09	J60A
	10	K60A K60B K60C
		K60D K60E
E11.20	09	J60A

ICD	MDC	DRG
	11	L69A L69B
E11.21	09	J60A
	11	L69A L69B
E11.30	02	C63A C63B
	09	J60A
E11.31	02	C63A C63B
	09	J60A
E11.40	01	B71A B71B B71C
	09	J60A
E11.41	01	B71A B71B B71C
	09	J60A
E11.50	05	F04Z F13A F13B F13C F75A F75B F75C F75D
	09	J60A
E11.51	05	F04Z F13A F13B F13C F75A F75B F75C F75D
	09	J60A
E11.60	05	F04Z F13A F13B F13C
	09	J60A
	10	K09A K60A K60B K60C K60D K60E
E11.61	05	F04Z F13A F13B F13C
	09	J60A
	10	K09A K60A K60B K60C K60D K60E
E11.72	05	F04Z F13A F13B F13C
	09	J60A
	10	K09A K60A K60B K60C K60D K60E
E11.73	05	F04Z F13A F13B F13C
	09	J60A
	10	K09A K60A K60B K60C K60D K60E
E11.74	05	F04Z F13A F13B F13C
	09	J60A
	10	K09A K60A K60B K60C K60D K60E
E11.75	05	F04Z F13A F13B F13C
	09	J60A
	10	K09A K60A K60B K60C K60D K60E
E11.80	09	J60A
	10	K60A K60B K60C K60D K60E
E11.81	09	J60A
	10	K60A K60B K60C K60D K60E
E11.90	09	J60A
	10	K60A K60B K60C K60D K60E
E11.91	09	J60A
	10	K60A K60B K60C K60D K60E
E12.01	09	J60A
	10	K60A K60B K60C K60D K60E
E12.11	09	J60A
	10	K60A K60B K60C K60D K60E
E12.20	09	J60A
	11	L68A L68B L68C
E12.21	09	J60A
	11	L68A L68B L68C
E12.30	02	C63A C63B
	09	J60A
E12.31	02	C63A C63B
	09	J60A
E12.40	01	B71A B71B B71C
	09	J60A
E12.41	01	B71A B71B B71C
	09	J60A
E12.50	05	F04Z F13A F13B F13C F75A F75B F75C F75D
	09	J60A
E12.51	05	F04Z F13A F13B F13C F75A F75B F75C F75D
	09	J60A
E12.60	05	F04Z F13A F13B F13C
	09	J60A
	10	K09A K60A K60B K60C K60D K60E
E12.61	05	F04Z F13A F13B F13C
	09	J60A
	10	K09A K60A K60B K60C K60D K60E
E12.72	05	F04Z F13A F13B F13C
	09	J60A
	10	K09A K60A K60B K60C K60D K60E
E12.73	05	F04Z F13A F13B F13C
	09	J60A
	10	K09A K60A K60B K60C K60D K60E
E12.74	05	F04Z F13A F13B F13C
	09	J60A
	10	K09A K60A K60B K60C K60D K60E
E12.75	05	F04Z F13A F13B F13C
	09	J60A
	10	K09A K60A K60B K60C K60D K60E
E12.80	09	J60A
	10	K60A K60B K60C K60D K60E
E12.81	09	J60A
	10	K60A K60B K60C K60D K60E
E12.90	09	J60A
	10	K60A K60B K60C K60D K60E
E12.91	09	J60A
	10	K60A K60B K60C K60D K60E
E13.01	09	J60A
	10	K60A K60B K60C K60D K60E
E13.11	09	J60A
	10	K60A K60B K60C K60D K60E
E13.20	09	J60A
	11	L69A L69B
E13.21	09	J60A
	11	L69A L69B
E13.30	02	C63A C63B
	09	J60A
E13.31	02	C63A C63B
	09	J60A
E13.40	01	B71A B71B B71C
	09	J60A
E13.41	01	B71A B71B B71C
	09	J60A
E13.50	05	F04Z F13A F13B F13C F75A F75B F75C F75D
	09	J60A
E13.51	05	F04Z F13A F13B F13C F75A F75B F75C F75D
	09	J60A
E13.60	05	F04Z F13A F13B F13C
	09	J60A
	10	K09A K60A K60B K60C K60D K60E
E13.61	05	F04Z F13A F13B F13C
	09	J60A
	10	K09A K60A K60B K60C K60D K60E
E13.72	05	F04Z F13A F13B F13C
	09	J60A
	10	K09A K60A K60B K60C K60D K60E
E13.73	05	F04Z F13A F13B F13C
	09	J60A
	10	K09A K60A K60B K60C K60D K60E
E13.74	05	F04Z F13A F13B F13C
	09	J60A
	10	K09A K60A K60B K60C K60D K60E
E13.75	05	F04Z F13A F13B F13C
	09	J60A
	10	K09A K60A K60B K60C K60D K60E
E13.80	09	J60A
	10	K60A K60B K60C K60D K60E
E13.81	09	J60A
	10	K60A K60B K60C K60D K60E
E13.90	09	J60A
	10	K60A K60B K60C K60D K60E
E13.91	09	J60A
	10	K60A K60B K60C K60D K60E
E14.01	09	J60A
	10	K60A K60B K60C K60D K60E
E14.11	09	J60A
	10	K60A K60B K60C K60D K60E
E14.20	09	J60A
	11	L69A L69B
E14.21	09	J60A
	11	L69A L69B
E14.30	02	C63A C63B
	09	J60A
E14.31	02	C63A C63B

DIAG

ICD	MDC	DRG
	09	J60A
E14.40	01	B71A B71B B71C
	09	J60A
E14.41	01	B71A B71B B71C
	09	J60A
E14.50	05	F04Z F13A F13B F13C F75A F75B F75C F75D
	09	J60A
E14.51	05	F04Z F13A F13B F13C F75A F75B F75C F75D
	09	J60A
E14.60	05	F04Z F13A F13B F13C
	09	J60A
	10	K09A K60A K60B K60C K60D K60E
E14.61	05	F04Z F13A F13B F13C
	09	J60A
	10	K09A K60A K60B K60C K60D K60E
E14.72	05	F04Z F13A F13B F13C
	09	J60A
	10	K09A K60A K60B K60C K60D K60E
E14.73	05	F04Z F13A F13B F13C
	09	J60A
	10	K09A K60A K60B K60C K60D K60E
E14.74	05	F04Z F13A F13B F13C
	09	J60A
	10	K09A K60A K60B K60C K60D K60E
E14.75	05	F04Z F13A F13B F13C
	09	J60A
	10	K09A K60A K60B K60C K60D K60E
E14.80	09	J60A
	10	K60A K60B K60C K60D K60E
E14.81	09	J60A
	10	K60A K60B K60C K60D K60E
E14.90	09	J60A
	10	K60A K60B K60C K60D K60E
E14.91	09	J60A
	10	K60A K60B K60C K60D K60E
E15	10	K62A K62B
	15	MSPNG SPNG
E16.0	10	K09A K09B K64A K64B K64C
E16.1	10	K09A K09B K64A K64B K64C
E16.2	10	K62A K62B
E16.3	10	K09A K09B K64A K64B K64C
E16.4	06	G67A G67B G67C G67D
E16.8	10	K09A K09B K64A K64B K64C
E16.9	10	K09A K09B K64A K64B K64C
E20.0	10	K09A K09B K64A K64B K64C
	15	MSPNG SPNG
E20.1	10	K62A K62B
E20.8	10	K09A K09B K64A K64B K64C
	15	MSPNG SPNG
E20.9	10	K09A K09B K64A K64B K64C
	15	MSPNG SPNG
E21.0	10	K09A K09B K64A K64B K64C
E21.1	10	K09A K09B K64A K64B K64C
E21.2	10	K09A K09B K64A K64B K64C
E21.3	10	K09A K09B K64A K64B K64C
E21.4	10	K09A K09B K64A K64B K64C
E21.5	10	K09A K09B K64A K64B K64C
E22.0	10	K09A K09B K64A K64B K64C
E22.1	10	K09A K09B K64A K64B K64C
E22.2	10	K09A K09B K64A K64B
E22.8	10	K09A K09B K64A K64B K64C
E22.9	10	K09A K09B K64A K64B K64C
E23.0	10	K09A K09B K64A K64B K64C
E23.1	10	K09A K09B K64A K64B K64C
E23.2	10	K09A K09B K64A K64B K64C
	15	MSPNG SPNG
E23.3	10	K09A K09B K64A K64B K64C
E23.6	10	K09A K09B K64A K64B K64C
E23.7	10	K09A K09B K64A K64B K64C
E24.0	10	K09A K09B K64A K64B K64C
E24.1	10	K09A K09B K64A K64B K64C
E24.2	10	K09A K09B K64A K64B K64C
E24.3	10	K09A K09B K64A K64B K64C
E24.4	10	K09A K09B K64A K64B K64C
E24.8	10	K09A K09B K64A K64B K64C
E24.9	10	K09A K09B K64A K64B K64C
E25.00	10	K09A K09B K64A K64B K64C
	15	MSPNG SPNG
E25.01	10	K09A K09B K64A K64B K64C
	15	MSPNG SPNG
E25.08	10	K09A K09B K64A K64B K64C
	15	MSPNG SPNG
E25.8	10	K09A K09B K64A K64B K64C
	15	MSPNG SPNG
E25.09	10	K09A K09B K64A K64B K64C
	15	MSPNG SPNG
E25.9	10	K09A K09B K64A K64B K64C
	15	MSPNG SPNG
E26.0	10	K09A K09B K64A K64B K64C
E26.1	10	K09A K09B K64A K64B K64C
E26.8	10	K09A K09B K64A K64B K64C
E26.9	10	K09A K09B K64A K64B K64C
E27.0	10	K09A K09B K64A K64B K64C
	15	MSPNG SPNG
E27.1	10	K09A K09B K64A K64B K64C
	15	MSPNG SPNG
E27.2	10	K09A K09B K64A K64B
	15	MSPNG SPNG
E27.3	10	K09A K09B K64A K64B K64C
	15	MSPNG SPNG
E27.4	10	K09A K09B K64A K64B K64C
	15	MSPNG SPNG
E27.5	10	K09A K09B K64A K64B K64C
	15	MSPNG SPNG
E27.8	10	K09A K09B K64A K64B K64C
	15	MSPNG SPNG
E27.9	10	K09A K09B K64A K64B K64C
E28.0	13	N62A N62B
E28.1	13	N62A N62B
E28.2	13	N62A N62B
E28.3	13	N62A N62B
E28.8	13	N62A N62B
E28.9	13	N62A N62B
E29.0	10	K09A K09B K64A K64B K64C
	15	MSPNG SPNG
E29.1	10	K09A K09B K64A K64B K64C
E29.8	10	K09A K09B K64A K64B K64C
E29.9	10	K09A K09B K64A K64B K64C
E30.0	10	K09A K09B K64A K64B K64C
E30.1	10	K09A K09B K64A K64B K64C
E30.8	10	K09A K09B K64A K64B K64C
E30.9	10	K09A K09B K64A K64B K64C
E31.0	10	K09A K09B K64A K64B K64C
E31.1	10	K09A K09B K64A K64B K64C
E31.8	10	K09A K09B K64A K64B K64C
E31.9	10	K09A K09B K64A K64B K64C
E32.0	16	Q60A Q60B Q60C

ICD	MDC	DRG
E32.1	15	MSPNG SPNG
	16	Q60A Q60B Q60C
E32.8	16	Q60A Q60B Q60C
E32.9	16	Q60A Q60B Q60C
E34.0	10	K09A K09B K64A
		K64B K64C
E34.1	10	K09A K09B K64A
		K64B K64C
E34.2	10	K09A K09B K64A
		K64B K64C
E34.3	10	K09A K09B K64A
		K64B K64C
	15	MSPNG SPNG
E34.4	23	Z64A Z64B Z64C
E34.8	10	K09A K09B K64A
		K64B K64C
E34.9	10	K09A K09B K64A
		K64B K64C
E34.50	10	K09A K09B K64A
		K64B K64C
E34.51	10	K09A K09B K64A
		K64B K64C
E34.59	10	K09A K09B K64A
		K64B K64C
E35.0	Prä	961Z
E35.1	15	MSPNG SPNG
	Prä	961Z
E35.8	Prä	961Z
E40	Prä	A95F
	04	E77A E77B
	10	K60A K60B K60C
E41	Prä	A95F
	04	E77A E77B
	10	K60A K60B K60C
E42	Prä	A95F
	04	E77A E77B
	10	K60A K60B K60C
E43	Prä	A95F
	04	E77A E77B
	10	K60A K60B K60C
E44.0	10	K60A K60B K60C
E44.1	10	K60A K60B K60C
		K60D K60E
E45	10	K62A K62B
E46	10	K60A K60B K60C
		K60D K60E
	15	MSPNG SPNG
E50.0	02	C63A C63B C63C
E50.1	02	C63A C63B C63C
E50.2	02	C63A C63B C63C
E50.3	02	C63A C63B C63C
E50.4	02	C63A C63B C63C
E50.5	02	C63A C63B C63C
E50.6	02	C63A C63B C63C
E50.7	02	C63A C63B C63C
E50.8	10	K62A K62B
E50.9	10	K62A K62B
E51.1	Prä	A11C
	10	K62A K62B
E51.2	Prä	A11C
	01	B63A B63B
	20	V02A
E51.8	Prä	A11C
	10	K60A K60B K60C
E51.9	10	K60A K60B K60C
E52	10	K62A K62B
E53.0	10	K62A K62B
E53.1	10	K62A K62B
E53.8	10	K62A K62B
E53.9	10	K62A K62B

ICD	MDC	DRG
E54	10	K62A K62B
E55.0	08	I69A I69B I69C
E55.9	10	K62A K62B
E56.0	10	K62A K62B
E56.1	10	K62A K62B
E56.8	10	K62A K62B
	15	P65B P66B P66C
		P67A P67B P67C
E56.9	10	K62A K62B
E58	10	K62A K62B
E59	10	K62A K62B
E60	10	K62A K62B
E61.0	10	K62A K62B
E61.1	10	K62A K62B
E61.2	10	K62A K62B
E61.3	10	K62A K62B
E61.4	10	K62A K62B
E61.5	10	K62A K62B
E61.6	10	K62A K62B
E61.7	10	K62A K62B
E61.8	10	K62A K62B
E61.9	10	K62A K62B
E63.0	10	K62A K62B
E63.1	10	K62A K62B
E63.8	10	K62A K62B
E63.9	10	K62A K62B
E64.0	Prä	961Z
E64.1	Prä	961Z
E64.2	Prä	961Z
E64.3	Prä	961Z
E64.8	Prä	961Z
E64.9	Prä	961Z
E65	10	K62A K62B
E66.00	10	K62A K62B
E66.01	10	K62A K62B
E66.04	10	K62A K62B
E66.05	10	K62A K62B
E66.06	10	K62A K62B
E66.07	10	K62A K62B
E66.08	10	K62A K62B
E66.09	10	K62A K62B
E66.10	10	K62A K62B
E66.11	10	K62A K62B
E66.14	10	K62A K62B
E66.15	10	K62A K62B
E66.16	10	K62A K62B
E66.17	10	K62A K62B
E66.18	10	K62A K62B
E66.19	10	K62A K62B
E66.20	04	E07Z E63A E63B
E66.21	04	E07Z E63A E63B
E66.24	04	E07Z E63A E63B
E66.25	04	E07Z E63A E63B
E66.26	04	E07Z E63A E63B
E66.27	04	E07Z E63A E63B
E66.28	04	E07Z E63A E63B
E66.29	04	E07Z E63A E63B
E66.80	10	K62A K62B
E66.81	10	K62A K62B
E66.84	10	K62A K62B
E66.85	10	K62A K62B
E66.86	10	K62A K62B
E66.87	10	K62A K62B
E66.88	10	K62A K62B
E66.89	10	K62A K62B
E66.90	10	K62A K62B
E66.91	10	K62A K62B
E66.94	10	K62A K62B
E66.95	10	K62A K62B
E66.96	10	K62A K62B

ICD	MDC	DRG
E66.97	10	K62A K62B
E66.98	10	K62A K62B
E66.99	10	K62A K62B
E67.0	10	K62A K62B
E67.1	10	K62A K62B
E67.2	10	K62A K62B
E67.3	10	K62A K62B
E67.8	10	K62A K62B
E68	Prä	961Z
E70.0	10	K63A K63B
	15	MSPNG SPNG
	Prä	A11C
E70.1	10	K63A K63B
	15	MSPNG SPNG
	Prä	A11C
E70.2	10	K63A K63B
	15	MSPNG SPNG
	Prä	A11C
E70.3	10	K63A K63B
	15	MSPNG SPNG
	Prä	A11C
E70.8	10	K63A K63B
	15	MSPNG SPNG
	Prä	A11C
E70.9	10	K63A K63B
	15	MSPNG SPNG
	Prä	A11C
E71.0	10	K63A K63B
	15	MSPNG SPNG
	Prä	A11C
E71.1	10	K63A K63B
	15	MSPNG SPNG
	Prä	A11C
E71.2	10	K63A K63B
	15	MSPNG SPNG
	Prä	A11C
E71.3	Prä	A11C
	10	K62A K62B
	15	P65B P66B P66C
		P67A P67B P67C
E72.0	10	K63A K63B
	15	MSPNG SPNG
	Prä	A11C
E72.1	10	K63A K63B
	15	MSPNG SPNG
	Prä	A11C
E72.2	10	K63A K63B
	15	MSPNG SPNG
	Prä	A11C
E72.3	10	K63A K63B
	15	MSPNG SPNG
	Prä	A11C
E72.4	10	K63A K63B
	15	MSPNG SPNG
	Prä	A11C
E72.5	10	K63A K63B
	15	MSPNG SPNG
	Prä	A11C
E72.8	10	K63A K63B
	15	MSPNG SPNG
	Prä	A11C
E72.9	10	K63A K63B
	15	MSPNG SPNG
	Prä	A11C
E73.0	Prä	A11C
	06	G67A G67B G67C
		G67D
E73.1	Prä	A11C
	06	G72A G72B
E73.8	Prä	A11C

DIAG

ICD	MDC	DRG
	06	G72A G72B
E73.9	Prä	A11C
	06	G72A G72B
E74.0	10	K63A K63B
	15	MSPNG SPNG
	Prä	A11C
E74.1	06	G72A G72B
	15	MSPNG SPNG
	Prä	A11C
E74.2	10	K63A K63B
	15	MSPNG SPNG
	Prä	A11C
E74.3	Prä	A11C
	06	G72A G72B
E74.4	Prä	A11C
	10	K63A K63B
E74.8	Prä	A11C
	10	K63A K63B
E74.9	Prä	A11C
	10	K63A K63B
E75.0	Prä	A11C
	01	B85A B85B
E75.1	Prä	A11C
	01	B85A B85B
E75.2	Prä	A11C
	01	B85A
E75.3	Prä	A11C
	10	K63A K63B
E75.4	Prä	A11C
	01	B85A B85B
E75.5	Prä	A11C
	10	K63A K63B
E75.6	Prä	A11C
	10	K63A K63B
E76.0	10	K63A K63B
	15	MSPNG SPNG
	Prä	A11C
E76.1	10	K63A K63B
	15	MSPNG SPNG
	Prä	A11C
E76.2	10	K63A K63B
	15	MSPNG SPNG
	Prä	A11C
E76.3	10	K63A K63B
	15	MSPNG SPNG
	Prä	A11C
E76.8	10	K63A K63B
	15	MSPNG SPNG
	Prä	A11C
E76.9	10	K63A K63B
	15	MSPNG SPNG
	Prä	A11C
E77.0	Prä	A11C
	10	K63A K63B
E77.1	Prä	A11C
	10	K63A K63B
E77.8	Prä	A11C
	10	K63A K63B
E77.9	Prä	A11C
	10	K63A K63B
E78.0	10	K63A K63B
E78.1	10	K63A K63B
E78.2	10	K63A K63B
E78.3	10	K63A K63B
E78.4	10	K62A K62B
E78.5	10	K62A K62B
E78.6	10	K63A K63B
	15	MSPNG SPNG
E78.8	10	K63A K63B
E78.9	10	K63A K63B

ICD	MDC	DRG
	15	MSPNG SPNG
E79.0	10	K63A K63B
	15	MSPNG SPNG
E79.1	10	K63A K63B
	15	MSPNG SPNG
E79.8	10	K63A K63B
	15	MSPNG SPNG
E79.9	10	K63A K63B
	15	MSPNG SPNG
E80.0	10	K63A K63B
	15	MSPNG SPNG
E80.1	10	K63A K63B
	15	MSPNG SPNG
E80.2	10	K63A K63B
	15	MSPNG SPNG
E80.3	10	K63A K63B
E80.4	07	H63A H63B H63C
		H63D
E80.5	07	H63A H63B H63C
		H63D
E80.6	07	H63A H63B H63C
		H63D
	15	MSPNG SPNG
E80.7	07	H63A H63B H63C
		H63D
E83.0	10	K63A K63B
	15	MSPNG SPNG
E83.1	16	Q61A Q61B Q61C
E83.2	10	K63A K63B
E83.4	10	K62A K62B
E83.8	10	K63A K63B
E83.9	10	K63A K63B
E83.30	10	K63A K63B
E83.31	10	K63A K63B
E83.38	10	K63A K63B
E83.39	10	K63A K63B
E83.50	10	K62A K62B
E83.58	10	K62A K62B
E83.59	10	K62A K62B
E84.0	04	E60A E60B
	15	MSPNG SPNG
	Prä	A11C
E84.1	06	G71A G71B
	15	MSPNG SPNG
	Prä	A11C
E84.9	04	E60A E60B
	15	MSPNG SPNG
E84.80	04	E60A E60B
	15	MSPNG SPNG
	Prä	A11C
E84.87	04	E60A E60B
	15	MSPNG SPNG
	Prä	A11C
E84.88	04	E60A E60B
	15	MSPNG SPNG
	Prä	A11C
E85.0	Prä	A11C
	08	I66A I66B I66C
E85.1	Prä	A11C
	08	I66A I66B I66C
E85.2	Prä	A11C
	08	I66A I66B I66C
E85.3	Prä	A11C
	08	I66A I66B I66C
E85.4	08	I66A I66B I66C
E85.8	08	I66A I66B I66C
E85.9	08	I66A I66B I66C
E86	10	K62A K62B
	15	P65B P66B P66C
		P67A P67B P67C

ICD	MDC	DRG
E87.0	10	K62A K62B
E87.1	10	K09A K09B K64A
		K64B K64C
E87.2	10	K62A K62B
	15	P65B P66B P66C
		P67A P67B P67C
E87.3	10	K62A K62B
E87.4	10	K62A K62B
E87.5	10	K62A K62B
E87.6	10	K62A K62B
E87.7	Prä	961Z
E87.8	10	K62A K62B
E88.0	10	K63A K63B
E88.1	10	K63A K63B
	15	MSPNG SPNG
E88.3	10	K63A K63B
E88.8	10	K63A K63B
E88.9	10	K63A K63B
E88.20	23	Z65A Z65B
E88.21	23	Z65A Z65B
E88.22	23	Z65A Z65B
E88.28	23	Z65A Z65B
E88.29	10	K63A K63B
	15	P65B P66B P66C
		P67A P67B P67C
E89.0	10	K09A K09B K64A
		K64B K64C
E89.1	10	K62A K62B
E89.2	10	K09A K09B K64A
		K64B K64C
	15	MSPNG SPNG
E89.3	10	K09A K09B K64A
		K64B K64C
E89.4	13	N62A N62B
E89.5	10	K09A K09B K64A
		K64B K64C
E89.6	10	K09A K09B K64A
		K64B K64C
	15	MSPNG SPNG
E89.8	10	K09A K09B K64A
		K64B K64C
E89.9	10	K09A K09B K64A
		K64B K64C
E90	Prä	961Z
F00.0	Prä	961Z
	14	O01B O01C O01D
		O01E O01F O50A
		O50B O60A O60B
		O60C
	20	V02A
F00.1	Prä	961Z
	20	V02A
F00.2	Prä	961Z
	14	O01B O01C O01D
		O01E O01F O50A
		O50B O60A O60B
		O60C
	20	V02A
F00.9	Prä	961Z
	14	O01B O01C O01D
		O01E O01F O50A
		O50B O60A O60B
		O60C
	20	V02A
F01.0	01	B63A B63B
	14	O01B O01C O01D
		O01E O01F O50A
		O50B O60A O60B
		O60C
	20	V02A

ICD	MDC	DRG
F01.1	01	B63A B63B
	14	O01B O01C O01D O01E O01F O50A O50B O60A O60B O60C
	20	V02A
F01.2	01	B63A B63B
	14	O01B O01C O01D O01E O01F O50A O50B O60A O60B O60C
	20	V02A
F01.3	01	B63A B63B
	14	O01B O01C O01D O01E O01F O50A O50B O60A O60B O60C
	20	V02A
F01.8	01	B63A B63B
	14	O01B O01C O01D O01E O01F O50A O50B O60A O60B O60C
	20	V02A
F01.9	01	B81A B81B B81C
	14	O01B O01C O01D O01E O01F O50A O50B O60A O60B O60C
	20	V02A
F02.0	Prä	961Z
	14	O01B O01C O01D O01E O01F O50A O50B O60A O60B O60C
	20	V02A
F02.1	Prä	961Z
	14	O01B O01C O01D O01E O01F O50A O50B O60A O60B O60C
	20	V02A
F02.2	Prä	961Z
	14	O01B O01C O01D O01E O01F O50A O50B O60A O60B O60C
	20	V02A
F02.3	Prä	961Z
	01	B67A B67B
	14	O01B O01C O01D O01E O01F O50A O50B O60A O60B O60C
	20	V02A
F02.4	14	O01B O01C O01D O01E O01F O50A O50B O60A O60B O60C
	15	MSPNG SPNG
	18B	T63A
	20	V02A
	Prä	961Z
F02.8	Prä	961Z
	20	V02A
F03	01	B81A B81B B81C
	14	O01B O01C O01D O01E O01F O50A O50B O60A O60B O60C
F04	01	B63A B63B
	14	O01B O01C O01D O01E O01F O50A O50B O60A O60B O60C
F05.0	01	B64A B64B
	14	O01B O01C O01D O01E O01F O50A O50B O60A O60B O60C
	20	V02A
F05.1	01	B64A B64B
	14	O01B O01C O01D O01E O01F O50A O50B O60A O60B O60C
	20	V02A
F05.8	01	B64A B64B
	14	O01B O01C O01D O01E O01F O50A O50B O60A O60B O60C
	20	V02A
F05.9	01	B64A B64B B81A B81B B81C
	14	O01B O01C O01D O01E O01F O50A O50B O60A O60B O60C
	20	V02A
F06.0	01	B64A B64B B67A B67B
	14	O01B O01C O01D O01E O01F O50A O50B O60A O60B O60C
	20	V02A
F06.1	01	B64A B64B
	14	O01B O01C O01D O01E O01F O50A O50B O60A O60B O60C
	20	V02A
F06.2	01	B64A B64B B67A B67B
	14	O01B O01C O01D O01E O01F O50A O50B O60A O60B O60C
	20	V02A
F06.3	01	B64A B64B
	14	O01B O01C O01D O01E O01F O50A O50B O60A O60B O60C
	20	V02A
F06.4	01	B64A B64B
	14	O01B O01C O01D O01E O01F O50A O50B O60A O60B O60C
	20	V02A
F06.5	01	B64A B64B
	14	O01B O01C O01D O01E O01F O50A O50B O60A O60B O60C
	20	V02A
F06.6	01	B64A B64B
	14	O01B O01C O01D O01E O01F O50A O50B O60A O60B O60C
F06.7	01	B64A B64B
F06.8	01	B63A B63B
	20	V02A
F06.9	01	B63A B63B
F07.0	01	B63A B63B
	14	O01B O01C O01D O01E O01F O50A O50B O60A O60B O60C
	20	V02A
F07.1	01	B63A B63B
	20	V02A
F07.2	01	B76A B76B B76C B76D B76E B76F B76G B76H
	20	V02A
F07.8	01	B63A B63B
	20	V02A
F07.9	01	B64A B64B B81A B81B B81C
F09	01	B81A B81B B81C
F10.0	14	O01B O01C O01D O01E O01F O50A O50B O60A O60B O60C
	20	V02A V02B V02C V02D
F10.1	14	O01B O01C O01D O01E O01F O50A O50B O60A O60B O60C
	20	V02A V02B V02C V02D
F10.2	14	O01B O01C O01D O01E O01F O50A O50B O60A O60B O60C
	20	V02A V02B V02C V02D
F10.3	14	O01B O01C O01D O01E O01F O50A O50B O60A O60B O60C
	20	V02A V02B V02C V02D
F10.4	14	O01B O01C O01D O01E O01F O50A O50B O60A O60B O60C
	20	V02A V02B V02D
F10.5	14	O01B O01C O01D O01E O01F O50A O50B O60A O60B O60C
	20	V02A V02B V02C V02D
F10.6	14	O01B O01C O01D O01E O01F O50A O50B O60A O60B O60C
	20	V02A V02B V02C V02D
F10.7	14	O01B O01C O01D O01E O01F O50A O50B O60A O60B O60C
	20	V02A V02B V02C

DIAG

ICD	MDC	DRG
		V02D
F10.8	14	O01B O01C O01D O01E O01F O50A O50B O60A O60B O60C
	20	V02A V02B V02C V02D
F10.9	14	O01B O01C O01D O01E O01F O50A O50B O60A O60B O60C
	20	V02A V02B V02C V02D
F11.0	14	O01B O01C O01D O01E O01F O50A O50B O60A O60B O60C
	20	V02A V02B V02D
F11.1	14	O01B O01C O01D O01E O01F O50A O50B O60A O60B O60C
	20	V02A V02B V02D
F11.2	14	O01B O01C O01D O01E O01F O50A O50B O60A O60B O60C
	20	V02A V02B V02D
F11.3	14	O01B O01C O01D O01E O01F O50A O50B O60A O60B O60C
	20	V02A V02B V02D
F11.4	14	O01B O01C O01D O01E O01F O50A O50B O60A O60B O60C
	20	V02A V02B V02D
F11.5	14	O01B O01C O01D O01E O01F O50A O50B O60A O60B O60C
	20	V02A V02B V02D
F11.6	14	O01B O01C O01D O01E O01F O50A O50B O60A O60B O60C
	20	V02A V02B V02D
F11.7	14	O01B O01C O01D O01E O01F O50A O50B O60A O60B O60C
	20	V02A V02B V02D
F11.8	14	O01B O01C O01D O01E O01F O50A O50B O60A O60B O60C
	20	V02A V02B V02D
F11.9	14	O01B O01C O01D O01E O01F O50A O50B O60A O60B O60C
	20	V02A V02B V02D
F12.0	20	V02A V02B V02C V02D
F12.1	20	V02A V02B V02C V02D
F12.2	20	V02A V02B V02C V02D
F12.3	14	O01B O01C O01D O01E O01F O50A O50B O60A O60B O60C
	20	V02A V02B V02C V02D
F12.4	14	O01B O01C O01D O01E O01F O50A O50B O60A O60B O60C
	20	V02A V02B V02D
F12.5	14	O01B O01C O01D O01E O01F O50A O50B O60A O60B O60C
	20	V02A V02B V02C V02D
F12.6	14	O01B O01C O01D O01E O01F O50A O50B O60A O60B O60C
	20	V02A V02B V02C V02D
F12.7	14	O01B O01C O01D O01E O01F O50A O50B O60A O60B O60C
	20	V02A V02B V02C V02D
F12.8	14	O01B O01C O01D O01E O01F O50A O50B O60A O60B O60C
	20	V02A V02B V02C V02D
F12.9	14	O01B O01C O01D O01E O01F O50A O50B O60A O60B O60C
	20	V02A V02B V02C V02D
F13.0	14	O01B O01C O01D O01E O01F O50A O50B O60A O60B O60C
	20	V02A V02B V02C V02D
F13.1	14	O01B O01C O01D O01E O01F O50A O50B O60A O60B O60C
	20	V02A V02B V02C V02D
F13.2	14	O01B O01C O01D O01E O01F O50A O50B O60A O60B O60C
	20	V02A V02B V02C V02D
F13.3	14	O01B O01C O01D O01E O01F O50A O50B O60A O60B O60C
	20	V02A V02B V02C V02D
F13.4	14	O01B O01C O01D O01E O01F O50A O50B O60A O60B O60C
	20	V02A V02B V02D
F13.5	14	O01B O01C O01D O01E O01F O50A O50B O60A O60B O60C
	20	V02A V02B V02C V02D
F13.6	14	O01B O01C O01D O01E O01F O50A O50B O60A O60B O60C
	20	V02A V02B V02C V02D
F13.7	14	O01B O01C O01D O01E O01F O50A O50B O60A O60B O60C
	20	V02A V02B V02C V02D
F13.8	14	O01B O01C O01D O01E O01F O50A O50B O60A O60B O60C
	20	V02A V02B V02C V02D
F13.9	14	O01B O01C O01D O01E O01F O50A O50B O60A O60B O60C
	20	V02A V02B V02C V02D
F14.0	14	O01B O01C O01D O01E O01F O50A O50B O60A O60B O60C
	20	V02A V02B V02C V02D
F14.1	14	O01B O01C O01D O01E O01F O50A O50B O60A O60B O60C
	20	V02A V02B V02C V02D
F14.2	14	O01B O01C O01D O01E O01F O50A O50B O60A O60B O60C
	20	V02A V02B V02C V02D
F14.3	14	O01B O01C O01D O01E O01F O50A O50B O60A O60B O60C
	20	V02A V02B V02C V02D
F14.4	14	O01B O01C O01D O01E O01F O50A O50B O60A O60B O60C
	20	V02A V02B V02D
F14.5	14	O01B O01C O01D O01E O01F O50A O50B O60A O60B O60C
	20	V02A V02B V02C V02D
F14.6	14	O01B O01C O01D O01E O01F O50A O50B O60A O60B O60C
	20	V02A V02B V02C V02D

ICD	MDC	DRG
F14.7	14	O01B O01C O01D O01E O01F O50A O50B O60A O60B O60C
	20	V02A V02B V02C V02D
F14.8	14	O01B O01C O01D O01E O01F O50A O50B O60A O60B O60C
	20	V02A V02B V02C V02D
F14.9	14	O01B O01C O01D O01E O01F O50A O50B O60A O60B O60C
	20	V02A V02B V02C V02D
F15.0	14	O01B O01C O01D O01E O01F O50A O50B O60A O60B O60C
	20	V02A V02B V02C V02D
F15.1	14	O01B O01C O01D O01E O01F O50A O50B O60A O60B O60C
	20	V02A V02B V02C V02D
F15.2	14	O01B O01C O01D O01E O01F O50A O50B O60A O60B O60C
	20	V02A V02B V02C V02D
F15.3	14	O01B O01C O01D O01E O01F O50A O50B O60A O60B O60C
	20	V02A V02B V02C V02D
F15.4	14	O01B O01C O01D O01E O01F O50A O50B O60A O60B O60C
	20	V02A V02B V02D
F15.5	14	O01B O01C O01D O01E O01F O50A O50B O60A O60B O60C
	20	V02A V02B V02C V02D
F15.6	14	O01B O01C O01D O01E O01F O50A O50B O60A O60B O60C
	20	V02A V02B V02C V02D
F15.7	14	O01B O01C O01D O01E O01F O50A O50B O60A O60B O60C
	20	V02A V02B V02C V02D
F15.8	14	O01B O01C O01D O01E O01F O50A O50B O60A O60B O60C
	20	V02A V02B V02C V02D
F15.9	14	O01B O01C O01D O01E O01F O50A O50B O60A O60B O60C
	20	V02A V02B V02C V02D
F16.0	14	O01B O01C O01D O01E O01F O50A O50B O60A O60B O60C
	20	V02A V02B V02C V02D
F16.1	14	O01B O01C O01D O01E O01F O50A O50B O60A O60B O60C
	20	V02A V02B V02C V02D
F16.2	14	O01B O01C O01D O01E O01F O50A O50B O60A O60B O60C
	20	V02A V02B V02C V02D
F16.3	14	O01B O01C O01D O01E O01F O50A O50B O60A O60B O60C
	20	V02A V02B V02C V02D
F16.4	14	O01B O01C O01D O01E O01F O50A O50B O60A O60B O60C
	20	V02A V02B V02D
F16.5	14	O01B O01C O01D O01E O01F O50A O50B O60A O60B O60C
	20	V02A V02B V02C V02D
F16.6	14	O01B O01C O01D O01E O01F O50A O50B O60A O60B O60C
	20	V02A V02B V02C V02D
F16.7	14	O01B O01C O01D O01E O01F O50A O50B O60A O60B O60C
	20	V02A V02B V02C V02D
F16.8	14	O01B O01C O01D O01E O01F O50A O50B O60A O60B O60C
	20	V02A V02B V02C V02D
F16.9	14	O01B O01C O01D O01E O01F O50A O50B O60A O60B O60C
	20	V02A V02B V02C V02D
F17.0	20	V02A V02B V02C V02D
F17.1	20	V02A V02B V02C V02D
F17.2	20	V02A V02B V02C V02D
F17.3	20	V02A V02B V02C V02D
F17.4	20	V02A V02B V02D
F17.5	20	V02A V02B V02C V02D
F17.6	20	V02A V02B V02C V02D
F17.7	20	V02A V02B V02C V02D
F17.8	20	V02A V02B V02C V02D
F17.9	20	V02A V02B V02C V02D
F18.0	14	O01B O01C O01D O01E O01F O50A O50B O60A O60B O60C
	20	V02A V02B V02C V02D
F18.1	14	O01B O01C O01D O01E O01F O50A O50B O60A O60B O60C
	20	V02A V02B V02C V02D
F18.2	14	O01B O01C O01D O01E O01F O50A O50B O60A O60B O60C
	20	V02A V02B V02C V02D
F18.3	14	O01B O01C O01D O01E O01F O50A O50B O60A O60B O60C
	20	V02A V02B V02C V02D
F18.4	14	O01B O01C O01D O01E O01F O50A O50B O60A O60B O60C
	20	V02A V02B V02D
F18.5	14	O01B O01C O01D O01E O01F O50A O50B O60A O60B O60C
	20	V02A V02B V02C V02D
F18.6	14	O01B O01C O01D O01E O01F O50A O50B O60A O60B O60C
	20	V02A V02B V02C V02D
F18.7	14	O01B O01C O01D O01E O01F O50A O50B O60A O60B O60C
	20	V02A V02B V02C V02D
F18.8	14	O01B O01C O01D O01E O01F O50A O50B O60A O60B O60C
	20	V02A V02B V02C V02D
F18.9	14	O01B O01C O01D O01E O01F O50A

DIAG

ICD	MDC	DRG
		O50B O60A O60B O60C
	20	V02A V02B V02C V02D
F19.0	14	O01B O01C O01D O01E O01F O50A O50B O60A O60B O60C
	20	V02A V02B V02D
F19.1	14	O01B O01C O01D O01E O01F O50A O50B O60A O60B O60C
	20	V02A V02B V02D
F19.2	14	O01B O01C O01D O01E O01F O50A O50B O60A O60B O60C
	20	V02A V02B V02D
F19.3	14	O01B O01C O01D O01E O01F O50A O50B O60A O60B O60C
	15	MSPNG SPNG
	20	V02A V02B V02D
F19.4	14	O01B O01C O01D O01E O01F O50A O50B O60A O60B O60C
	20	V02A V02B V02D
F19.5	14	O01B O01C O01D O01E O01F O50A O50B O60A O60B O60C
	20	V02A V02B V02D
F19.6	14	O01B O01C O01D O01E O01F O50A O50B O60A O60B O60C
	20	V02A V02B V02D
F19.7	14	O01B O01C O01D O01E O01F O50A O50B O60A O60B O60C
	20	V02A V02B V02D
F19.8	14	O01B O01C O01D O01E O01F O50A O50B O60A O60B O60C
	20	V02A V02B V02D
F19.9	14	O01B O01C O01D O01E O01F O50A O50B O60A O60B O60C
	20	V02A V02B V02D
F20.0	14	O01B O01C O01D O01E O01F O50A O50B O60A O60B O60C
	19	U61A U61B
F20.1	14	O01B O01C O01D O01E O01F O50A O50B O60A O60B O60C
	19	U61A U61B
F20.2	14	O01B O01C O01D O01E O01F O50A O50B O60A O60B O60C
	19	U61A U61B
F20.3	14	O01B O01C O01D O01E O01F O50A O50B O60A O60B O60C
	19	U61A U61B
F20.4	19	U64A U64B
F20.5	14	O01B O01C O01D O01E O01F O50A O50B O60A O60B O60C
	19	U61A U61B
F20.6	14	O01B O01C O01D O01E O01F O50A O50B O60A O60B O60C
	19	U61A U61B
F20.8	14	O01B O01C O01D O01E O01F O50A O50B O60A O60B O60C
	19	U61A U61B
F20.9	14	O01B O01C O01D O01E O01F O50A O50B O60A O60B O60C
	19	U61A U61B
F21	19	U61A U61B
F22.0	19	U63Z
F22.8	19	U63Z
F22.9	19	U63Z
F23.0	14	O01B O01C O01D O01E O01F O50A O50B O60A O60B O60C
	19	U61A U61B
F23.1	14	O01B O01C O01D O01E O01F O50A O50B O60A O60B O60C
	19	U61A U61B
F23.2	14	O01B O01C O01D O01E O01F O50A O50B O60A O60B O60C
	19	U61A U61B
F23.3	14	O01B O01C O01D O01E O01F O50A O50B O60A O60B O60C
	19	U61A U61B
F23.8	14	O01B O01C O01D O01E O01F O50A O50B O60A O60B O60C
	19	U61A U61B
F23.9	14	O01B O01C O01D O01E O01F O50A O50B O60A O60B O60C
	19	U61A U61B
F24	19	U61A U61B
F25.0	14	O01B O01C O01D O01E O01F O50A O50B O60A O60B O60C
	19	U61A U61B
F25.1	14	O01B O01C O01D O01E O01F O50A O50B O60A O60B O60C
	19	U61A U61B
F25.2	14	O01B O01C O01D O01E O01F O50A O50B O60A O60B O60C
	19	U61A U61B
F25.8	14	O01B O01C O01D O01E O01F O50A O50B O60A O60B O60C
	19	U61A U61B
F25.9	14	O01B O01C O01D O01E O01F O50A O50B O60A O60B O60C
	19	U61A U61B
F28	19	U63Z
F29	14	O01B O01C O01D O01E O01F O50A O50B O60A O60B O60C
	19	U63Z
F30.0	14	O01B O01C O01D O01E O01F O50A O50B O60A O60B O60C
	19	U63Z
F30.1	14	O01B O01C O01D O01E O01F O50A O50B O60A O60B O60C
	19	U63Z
F30.2	14	O01B O01C O01D O01E O01F O50A O50B O60A O60B O60C
	19	U63Z
F30.8	14	O01B O01C O01D O01E O01F O50A O50B O60A O60B O60C
	19	U63Z
F30.9	14	O01B O01C O01D O01E O01F O50A O50B O60A O60B O60C
	19	U63Z
F31.0	14	O01B O01C O01D O01E O01F O50A O50B O60A O60B O60C
	19	U63Z
F31.1	14	O01B O01C O01D O01E O01F O50A O50B O60A O60B O60C
	19	U63Z
F31.2	14	O01B O01C O01D O01E O01F O50A O50B O60A O60B O60C
	19	U63Z
F31.3	19	U63Z
F31.4	14	O01B O01C O01D O01E O01F O50A O50B O60A O60B O60C
	19	U63Z
F31.5	14	O01B O01C O01D O01E O01F O50A

ICD	MDC	DRG
		O50B O60A O60B
		O60C
	19	U63Z
F31.6	14	O01B O01C O01D
		O01E O01F O50A
		O50B O60A O60B
		O60C
	19	U63Z
F31.7	19	U63Z
F31.8	14	O01B O01C O01D
		O01E O01F O50A
		O50B O60A O60B
		O60C
	19	U63Z
F31.9	14	O01B O01C O01D
		O01E O01F O50A
		O50B O60A O60B
		O60C
	19	U63Z
F32.0	19	U64A U64B
F32.1	19	U63Z
F32.2	14	O01B O01C O01D
		O01E O01F O50A
		O50B O60A O60B
		O60C
	19	U63Z
F32.3	14	O01B O01C O01D
		O01E O01F O50A
		O50B O60A O60B
		O60C
	19	U63Z
F32.8	19	U64A U64B
F32.9	19	U64A U64B
F33.0	19	U64A U64B
F33.1	19	U64A U64B
F33.2	14	O01B O01C O01D
		O01E O01F O50A
		O50B O60A O60B
		O60C
	19	U63Z
F33.3	14	O01B O01C O01D
		O01E O01F O50A
		O50B O60A O60B
		O60C
	19	U63Z
F33.4	19	U64A U64B
F33.8	14	O01B O01C O01D
		O01E O01F O50A
		O50B O60A O60B
		O60C
	19	U64A U64B
F33.9	14	O01B O01C O01D
		O01E O01F O50A
		O50B O60A O60B
		O60C
	19	U64A U64B
F34.0	19	U64A U64B
F34.1	19	U64A U64B
F34.8	19	U64A U64B
F34.9	19	U64A U64B
F38.0	19	U64A U64B
F38.1	19	U64A U64B
F38.8	19	U64A U64B
F39	19	U64A U64B
F40.00	19	U64A U64B
F40.01	19	U64A U64B
F40.1	19	U64A U64B
F40.2	19	U64A U64B
F40.8	19	U64A U64B
F40.9	19	U64A U64B

ICD	MDC	DRG
F41.0	19	U64A U64B
F41.1	19	U64A U64B
F41.2	19	U64A U64B
F41.3	19	U64A U64B
F41.8	19	U64A U64B
F41.9	19	U64A U64B
F42.0	19	U66A U66B U66C
		U66D
F42.1	19	U66A U66B U66C
		U66D
F42.2	19	U66A U66B U66C
		U66D
F42.8	19	U66A U66B U66C
		U66D
F42.9	19	U66A U66B U66C
		U66D
F43.0	19	U66A U66B U66C
		U66D
F43.1	19	U66A U66B U66C
		U66D
F43.2	19	U66A U66B U66C
		U66D
F43.8	19	U66A U66B U66C
		U66D
F43.9	19	U66A U66B U66C
		U66D
F44.0	19	U64A U64B
F44.1	19	U64A U64B
F44.2	19	U64A U64B
F44.3	19	U64A U64B
F44.4	19	U64A U64B
F44.5	01	B76A B76B B76C
		B76D B76E B76F
		B76G B76H
F44.6	19	U64A U64B
F44.7	19	U64A U64B
F44.9	19	U64A U64B
F44.80	19	U64A U64B
F44.81	19	U64A U64B
F44.82	19	U64A U64B
F44.88	19	U64A U64B
F45.0	19	U64A U64B
F45.1	19	U64A U64B
F45.2	19	U64A U64B
F45.8	19	U64A U64B
F45.9	19	U64A U64B
F45.30	05	F73A F73B
F45.31	19	U64A U64B
F45.32	19	U64A U64B
F45.33	04	E65A E65B E65C
		E65D
F45.34	11	L68A L68B L68C
F45.37	19	U64A U64B
F45.38	19	U64A U64B
F45.39	19	U64A U64B
F45.40	19	U64A U64B
F45.41	19	U64A U64B
F48.0	19	U64A U64B
F48.1	19	U64A U64B
F48.8	19	U64A U64B
F48.9	19	U64A U64B
F50.00	14	O01B O01C O01D
		O01E O01F O50A
		O50B O60A O60B
		O60C
	19	U66A U66B U66C
		U66D
F50.01	14	O01B O01C O01D
		O01E O01F O50A
		O50B O60A O60B

ICD	MDC	DRG
		O60C
	19	U66A U66B U66C
		U66D
F50.1	14	O01B O01C O01D
		O01E O01F O50A
		O50B O60A O60B
		O60C
	19	U66A U66B U66C
		U66D
F50.2	14	O01B O01C O01D
		O01E O01F O50A
		O50B O60A O60B
		O60C
	19	U66A U66B U66C
		U66D
F50.3	14	O01B O01C O01D
		O01E O01F O50A
		O50B O60A O60B
		O60C
	19	U66A U66B U66C
		U66D
F50.4	14	O01B O01C O01D
		O01E O01F O50A
		O50B O60A O60B
		O60C
	19	U66A U66B U66C
		U66D
F50.5	19	U66A U66B U66C
		U66D
F50.08	14	O01B O01C O01D
		O01E O01F O50A
		O50B O60A O60B
		O60C
	19	U66A U66B U66C
		U66D
F50.8	14	O01B O01C O01D
		O01E O01F O50A
		O50B O60A O60B
		O60C
	19	U66A U66B U66C
		U66D
F50.9	14	O01B O01C O01D
		O01E O01F O50A
		O50B O60A O60B
		O60C
	19	U66A U66B U66C
		U66D
F51.0	19	U64A U64B
F51.1	19	U64A U64B
F51.2	19	U64A U64B
F51.3	19	U64A U64B
F51.4	19	U64A U64B
F51.5	19	U64A U64B
F51.8	19	U64A U64B
F51.9	19	U64A U64B
F52.0	19	U66A U66B U66C
		U66D
F52.1	19	U66A U66B U66C
		U66D
F52.2	12	M64Z
	13	N62B
F52.3	19	U66A U66B U66C
		U66D
F52.4	19	U66A U66B U66C
		U66D
F52.5	13	N62B
F52.6	19	U66A U66B U66C
		U66D
F52.7	19	U66A U66B U66C
		U66D

DIAG

ICD	MDC	DRG
F52.8	19	U66A U66B U66C U66D
F52.9	19	U66A U66B U66C U66D
F53.0	14	O04Z O61Z
F53.1	14	O04Z O61Z
	20	V02B
F53.8	14	O04Z O61Z
F53.9	14	O04Z O61Z
F54	19	U66A U66B U66C U66D
F55.0	20	V02A V02B V02C V02D
F55.1	20	V02A V02B V02C V02D
F55.2	20	V02A V02B V02C V02D
F55.3	20	V02A V02B V02C V02D
F55.4	20	V02A V02B V02C V02D
F55.5	20	V02A V02B V02C V02D
F55.6	20	V02A V02B V02C V02D
F55.8	20	V02A V02B V02C V02D
F55.9	20	V02A V02B V02C V02D
F59	19	U64A U64B
F60.0	19	U66A U66B U66C U66D
F60.1	19	U66A U66B U66C U66D
F60.2	19	U66A U66B U66C U66D
F60.4	19	U66A U66B U66C U66D
F60.5	19	U66A U66B U66C U66D
F60.6	19	U66A U66B U66C U66D
F60.7	19	U66A U66B U66C U66D
F60.8	19	U66A U66B U66C U66D
F60.9	19	U66A U66B U66C U66D
F60.30	19	U66A U66B U66C U66D
	20	V02B
F60.31	19	U66A U66B U66C U66D
	20	V02B
F61	19	U66A U66B U66C U66D
F62.0	19	U66A U66B U66C U66D
F62.1	19	U66A U66B U66C U66D
F62.9	19	U66A U66B U66C U66D
F62.80	19	U66A U66B U66C U66D
F62.88	19	U66A U66B U66C U66D
F63.0	19	U66A U66B U66C U66D
F63.1	19	U66A U66B U66C U66D
F63.2	19	U66A U66B U66C U66D
F63.3	19	U66A U66B U66C U66D
F63.8	19	U66A U66B U66C U66D
F63.9	19	U66A U66B U66C U66D
F64.0	19	U01A U01B U66A U66B U66C U66D
F64.1	19	U01A U01B U66A U66B U66C U66D
F64.2	19	U66A U66B U66C U66D
F64.8	19	U01A U01B U66A U66B U66C U66D
F64.9	19	U01A U01B U66A U66B U66C U66D
F65.0	19	U66A U66B U66C U66D
F65.1	19	U66A U66B U66C U66D
F65.2	19	U66A U66B U66C U66D
F65.3	19	U66A U66B U66C U66D
F65.4	19	U66A U66B U66C U66D
F65.5	19	U66A U66B U66C U66D
F65.6	19	U66A U66B U66C U66D
F65.8	19	U66A U66B U66C U66D
F65.9	19	U66A U66B U66C U66D
F66.0	19	U66A U66B U66C U66D
F66.1	19	U66A U66B U66C U66D
F66.2	19	U66A U66B U66C U66D
F66.8	19	U66A U66B U66C U66D
F66.9	19	U66A U66B U66C U66D
F68.0	19	U64A U64B
F68.1	19	U66A U66B U66C U66D
F68.8	19	U66A U66B U66C U66D
F69	19	U66A U66B U66C U66D
F70.0	01	B81A B81B B81C
F70.1	01	B81A B81B B81C
	20	V02B
F70.8	01	B81A B81B B81C
F70.9	01	B81A B81B B81C
F71.0	01	B81A B81B B81C
F71.1	01	B81A B81B B81C
	20	V02B
F71.8	01	B81A B81B B81C
F71.9	01	B81A B81B B81C
F72.0	01	B81A B81B B81C
	20	V02B
F72.1	01	B81A B81B B81C
	20	V02B
F72.8	01	B81A B81B B81C
	20	V02B
F72.9	01	B81A B81B B81C
F73.0	01	B81A B81B B81C
	20	V02B
F73.1	01	B81A B81B B81C
	20	V02B
F73.8	01	B81A B81B B81C
	20	V02B
F73.9	01	B81A B81B B81C
F74.0	01	B81A B81B B81C
F74.1	01	B81A B81B B81C
	20	V02B
F74.8	01	B81A B81B B81C
F74.9	01	B81A B81B B81C
F78.0	01	B81A B81B B81C
F78.1	01	B81A B81B B81C
	20	V02B
F78.8	01	B81A B81B B81C
F78.9	01	B81A B81B B81C
F79.0	01	B81A B81B B81C
F79.1	01	B81A B81B B81C
	20	V02B
F79.8	01	B81A B81B B81C
F79.9	01	B81A B81B B81C
F80.0	19	U66A U66B U66C U66D
F80.1	19	U66A U66B U66C U66D
F80.3	19	U66A U66B U66C U66D
F80.8	19	U66A U66B U66C U66D
F80.9	19	U66A U66B U66C U66D
F80.20	19	U66A U66B U66C U66D
F80.28	19	U66A U66B U66C U66D
F81.0	19	U66A U66B U66C U66D
F81.1	19	U66A U66B U66C U66D
F81.2	19	U66A U66B U66C U66D
F81.3	19	U66A U66B U66C U66D
F81.8	19	U66A U66B U66C U66D
F81.9	19	U66A U66B U66C U66D
F82.0	15	MSPNG SPNG
	19	U66A U66B U66C U66D
F82.1	15	MSPNG SPNG
	19	U66A U66B U66C U66D
F82.2	15	MSPNG SPNG
	19	U66A U66B U66C U66D
F82.9	15	MSPNG SPNG
	19	U66A U66B U66C U66D
F83	15	MSPNG SPNG
	19	U66A U66B U66C U66D
F84.0	14	O01B O01C O01D O01E O01F O50A O50B O60A O60B O60C
	19	U66A U66B U66C U66D
F84.1	14	O01B O01C O01D

ICD	MDC	DRG
		O01E O01F O50A
		O50B O60A O60B
		O60C
	19	U66A U66B U66C
		U66D
F84.2	01	B85A B85B
	14	O01B O01C O01D
		O01E O01F O50A
		O50B O60A O60B
		O60C
F84.3	14	O01B O01C O01D
		O01E O01F O50A
		O50B O60A O60B
		O60C
	19	U66A U66B U66C
		U66D
F84.4	14	O01B O01C O01D
		O01E O01F O50A
		O50B O60A O60B
		O60C
	19	U66A U66B U66C
		U66D
F84.5	14	O01B O01C O01D
		O01E O01F O50A
		O50B O60A O60B
		O60C
	19	U66A U66B U66C
		U66D
F84.8	14	O01B O01C O01D
		O01E O01F O50A
		O50B O60A O60B
		O60C
	19	U66A U66B U66C
		U66D
F84.9	14	O01B O01C O01D
		O01E O01F O50A
		O50B O60A O60B
		O60C
	19	U66A U66B U66C
		U66D
F88	19	U66A U66B U66C
		U66D
F89	19	U66A U66B U66C
		U66D
F90.0	19	U66A U66B U66C
		U66D
F90.1	19	U66A U66B U66C
		U66D
F90.8	19	U66A U66B U66C
		U66D
F90.9	19	U66A U66B U66C
		U66D
F91.0	19	U66A U66B U66C
		U66D
F91.1	19	U66A U66B U66C
		U66D
F91.2	19	U66A U66B U66C
		U66D
F91.3	19	U66A U66B U66C
		U66D
F91.8	19	U66A U66B U66C
		U66D
F91.9	19	U66A U66B U66C
		U66D
F92.0	19	U66A U66B U66C
		U66D
F92.8	19	U66A U66B U66C
		U66D
F92.9	19	U66A U66B U66C
		U66D

ICD	MDC	DRG
F93.0	19	U66A U66B U66C
		U66D
F93.1	19	U66A U66B U66C
		U66D
F93.2	19	U66A U66B U66C
		U66D
F93.3	19	U66A U66B U66C
		U66D
F93.8	19	U66A U66B U66C
		U66D
F93.9	19	U66A U66B U66C
		U66D
F94.0	19	U66A U66B U66C
		U66D
F94.1	19	U66A U66B U66C
		U66D
F94.2	19	U66A U66B U66C
		U66D
F94.8	19	U66A U66B U66C
		U66D
F94.9	19	U66A U66B U66C
		U66D
F95.0	01	B81A B81B B81C
F95.1	01	B81A B81B B81C
F95.2	01	B81A B81B B81C
F95.8	01	B81A B81B B81C
F95.9	01	B81A B81B B81C
F98.00	19	U66A U66B U66C
		U66D
F98.01	19	U66A U66B U66C
		U66D
F98.1	19	U66A U66B U66C
		U66D
F98.02	19	U66A U66B U66C
		U66D
F98.2	19	U66A U66B U66C
		U66D
F98.3	19	U66A U66B U66C
		U66D
F98.5	01	B81A B81B B81C
F98.6	01	B81A B81B B81C
F98.08	19	U66A U66B U66C
		U66D
F98.9	19	U66A U66B U66C
		U66D
F98.40	19	U66A U66B U66C
		U66D
F98.41	19	U66A U66B U66C
		U66D
F98.49	19	U66A U66B U66C
		U66D
F98.80	19	U66A U66B U66C
		U66D
F98.88	19	U66A U66B U66C
		U66D
F99	19	U64A U64B
G00.0	01	B72A B72B
	15	MSPNG SPNG
	Prä	A11C
G00.1	01	B72A B72B
	15	MSPNG SPNG
	Prä	A11C
G00.2	01	B72A B72B
	15	MSPNG SPNG
	Prä	A11C
G00.3	01	B72A B72B
	15	MSPNG SPNG
	Prä	A11C
G00.8	01	B72A B72B
	15	MSPNG SPNG

ICD	MDC	DRG
	Prä	A11C
G00.9	01	B81A B81B B81C
	15	MSPNG SPNG
	Prä	A11C
G01	15	MSPNG SPNG
	Prä	961Z A11C
G02.0	15	MSPNG SPNG
	Prä	961Z A11C
G02.1	15	MSPNG SPNG
	Prä	961Z A11C
G02.8	15	MSPNG SPNG
	Prä	961Z A11C
G03.0	01	B72A B72B
	15	MSPNG SPNG
	Prä	A11C
G03.1	01	B72A B72B
	15	MSPNG SPNG
	Prä	A11C
G03.2	01	B72A B72B
	15	MSPNG SPNG
	Prä	A11C
G03.8	01	B72A B72B
	15	MSPNG SPNG
	Prä	A11C
G03.9	01	B81A B81B B81C
	15	MSPNG SPNG
	Prä	A11C
G04.0	Prä	A11C
	01	B72A B72B
G04.1	Prä	A11C A94A A94B
		A94C A97D B61A
		B61B B61C B61D
		B61E
	01	B60A B60B B66A
		B68A B70A B71A
		B71B B81A B85A
		B86B
	04	E36A E36B E36C
		E63A E70A E70B
		E71A E77A E86B
	05	F67A F73A F75C
	06	G67A G67B G86C
	07	H64A
	08	I02A I02B I02C
		I06A I06B I06C
		I10B I60A I61A
		I65A I68A I68B
		I71A I77A
	09	J11A J61A J61B
	10	K60B K62A K64A
	11	L18A L38Z L42A
		L60A L60B L62A
		L63A L63C L64A
		L68A
	16	Q60B
	17	R62A
	18B	T60B T60D
	19	U64A
	21A	W01A W01B W01C
		W01D
	23	Z86A
G04.2	Prä	A11C
	01	B72A B72B
G04.8	Prä	A11C
	01	B72A B72B
G04.9	Prä	A11C
	01	B81A B81B B81C
G05.0	15	MSPNG SPNG
	Prä	961Z A11C
G05.1	15	MSPNG SPNG

DIAG

ICD	MDC	DRG
	Prä	961Z A11C
G05.2	15	MSPNG SPNG
	Prä	961Z A11C
G05.8	15	MSPNG SPNG
	Prä	961Z A11C
G06.0	01	B72A B72B
	15	MSPNG SPNG
	Prä	A11C
G06.1	01	B72A B72B
	15	MSPNG SPNG
	Prä	A11C
G06.2	01	B81A B81B B81C
	15	MSPNG SPNG
	Prä	A11C
G07	15	MSPNG SPNG
	Prä	961Z A11C
G08	01	B81A B81B
	15	MSPNG SPNG
	Prä	A11C
G09	Prä	961Z A11C
G10	Prä	A11C
	01	B85A B85B
G11.0	Prä	A11C
	01	B03A B03B B03C
		B68A
G11.1	Prä	A11C
	01	B03A B03B B03C
		B68A
G11.2	Prä	A11C
	01	B03A B03B B03C
		B68A
G11.3	Prä	A11C
	01	B03A B03B B03C
		B68A
G11.4	Prä	A11C
	01	B03A B03B B03C
		B68A
G11.8	Prä	A11C
	01	B03A B03B B03C
		B68A
G11.9	Prä	A11C
	01	B81A B81B B81C
G12.0	01	B03A B03B B03C
		B85A B85B
	15	MSPNG SPNG
	Prä	A11C
G12.1	01	B03A B03B B03C
		B85A B85B
	15	MSPNG SPNG
	Prä	A11C
G12.2	Prä	A97C
	01	B03A B03B B03C
		B85A
G12.8	01	B03A B03B B03C
		B85A B85B
	15	MSPNG SPNG
G12.9	01	B81A B81B B81C
	15	MSPNG SPNG
G13.0	Prä	961Z A11C
G13.1	Prä	961Z A11C
G13.2	Prä	961Z A11C
G13.8	Prä	961Z A11C
G14	Prä	961Z
G20.00	01	B67A B67B B67C
	04	E77A E77B
	11	L63A
G20.01	01	B67A B67B B67C
	04	E77A E77B
	11	L63A
G20.10	Prä	A11C A95F
	01	B67A B67B B67C
	04	E77A E77B
	11	L63A
G20.11	Prä	A11C A95F
	01	B67A B67B B67C
	04	E77A E77B
	11	L63A
G20.20	Prä	A11C A95F
	01	B67A B67B
	04	E77A E77B
	11	L63A
G20.21	Prä	A11C A95F
	01	B67A B67B
	04	E77A E77B
	11	L63A
G20.90	01	B67A B67B B67C
		B81A B81B B81C
	04	E77A E77B
	11	L63A
G20.91	01	B67A B67B B67C
		B81A B81B B81C
	04	E77A E77B
	11	L63A
G21.0	Prä	A11C
	01	B03A B03B B03C
		B67A B67B B67C
	04	E77A E77B
	11	L63A
G21.1	Prä	A11C
	01	B03A B03B B03C
		B67A B67B B67C
	04	E77A E77B
	11	L63A
G21.2	Prä	A11C
	01	B67A B67B B67C
	04	E77A E77B
	11	L63A
G21.3	Prä	A11C
	01	B67A B67B B67C
	04	E77A E77B
	11	L63A
G21.4	01	B67A B67B B67C
	04	E77A E77B
	11	L63A
G21.8	01	B67A B67B B67C
	04	E77A E77B
	11	L63A
G21.9	01	B81A B81B B81C
G22	Prä	961Z
G23.0	Prä	A11C
	01	B67A B67B B67C
	04	E77A E77B
	11	L63A
G23.1	Prä	A11C
	01	B03A B03B B03C
		B67A B67B B67C
	04	E77A E77B
	11	L63A
G23.2	Prä	A11C
	01	B85A
G23.3	Prä	A11C
	01	B85A
G23.8	Prä	A11C
	01	B67A B67B B67C
	04	E77A E77B
	11	L63A
G23.9	Prä	A11C
	01	B81A B81B B81C
G24.0	01	B85A B85B
G24.1	01	B85A B85B
G24.2	01	B85A B85B
G24.3	01	B81A B81B B81C
G24.4	01	B81A B81B B81C
G24.5	02	C61A C61B
G24.8	01	B81A B81B B81C
G24.9	01	B81A B81B B81C
G25.0	01	B81A B81B B81C
G25.1	01	B81A B81B B81C
G25.2	01	B81A B81B B81C
G25.3	01	B76A B76B B76C
		B76D B76E B76F
		B76G B76H
G25.4	01	B85A B85B
G25.5	01	B85A B85B
G25.6	01	B81A B81B B81C
G25.9	01	B81A B81B B81C
		B85A B85B
G25.80	01	B03A B03B B03C
		B85A B85B
G25.81	01	B03A B03B B03C
		B85A B85B
G25.88	01	B03A B03B B03C
		B85A B85B
G26	Prä	961Z
G30.0	01	B63A B63B
G30.1	01	B63A B63B
G30.8	01	B63A B63B
G30.9	01	B63A B63B
G31.0	01	B63A B63B
G31.1	Prä	961Z
G31.2	01	B85A B85B
G31.9	01	B81A B81B B81C
G31.81	Prä	A11C
	01	B85A
G31.82	01	B85A
G31.88	01	B81A B81B B81C
		B85A
G32.0	Prä	961Z
G32.8	Prä	961Z
G35.0	Prä	A11C
	01	B03A B03B B03C
		B68A B68B
	14	O01B O01C O01D
		O01E O01F O50A
		O50B O60A O60B
		O60C
G35.9	Prä	A11C
	01	B81A B81B B81C
	14	O01B O01C O01D
		O01E O01F O50A
		O50B O60A O60B
		O60C
G35.10	Prä	A11C
	01	B03A B03B B03C
		B68A B68B
	14	O01B O01C O01D
		O01E O01F O50A
		O50B O60A O60B
		O60C
G35.11	Prä	A11C
	01	B03A B03B B03C
		B68A B68B
	14	O01B O01C O01D
		O01E O01F O50A
		O50B O60A O60B
		O60C
G35.20	Prä	A11C
	01	B03A B03B B03C
		B68A B68B
	14	O01B O01C O01D

ICD	MDC	DRG
		O01E O01F O50A O50B O60A O60B O60C
G35.21	Prä	A11C
	01	B03A B03B B03C B68A B68B
	14	O01B O01C O01D O01E O01F O50A O50B O60A O60B O60C
G35.30	Prä	A11C
	01	B03A B03B B03C B68A B68B
	14	O01B O01C O01D O01E O01F O50A O50B O60A O60B O60C
G35.31	Prä	A11C
	01	B03A B03B B03C B68A B68B
	14	O01B O01C O01D O01E O01F O50A O50B O60A O60B O60C
G36.0	Prä	A11C
	01	B03A B03B B03C B68A B68B
G36.1	Prä	A11C
	01	B03A B03B B03C B68A B68B
G36.8	Prä	A11C
	01	B03A B03B B03C B68A B68B B81A B81B B81C
G36.9	Prä	A11C
	01	B03A B03B B03C B81A B81B B81C
G37.0	Prä	A11C
	01	B03A B03B B03C B68A
G37.1	Prä	A11C
	01	B03A B03B B03C B68A
G37.2	Prä	A11C
	01	B03A B03B B03C B68A
G37.3	Prä	A11C
	01	B03A B03B B03C B68A
G37.4	Prä	A11C
	01	B03A B03B B03C B68A
G37.5	Prä	A11C
	01	B03A B03B B03C B68A
G37.8	Prä	A11C
	01	B03A B03B B03C B68A B81A B81B B81C
G37.9	Prä	A11C
	01	B81A B81B B81C
G40.00	Prä	A11C
	01	B03A B03B B03C B76A B76B B76C B76D B76E B76F B76G B76H B86B
	14	O01B O01C O01D O01E O01F O50A O50B O60A O60B O60C
G40.01	Prä	A11C
	01	B03A B03B B03C B76A B76B B76C B76D B76E B76F B76G B76H B86B
	14	O01B O01C O01D O01E O01F O50A O50B O60A O60B O60C
G40.1	01	B03A B03B B03C B76A B76B B76C B76D B76E B76F B76G B76H B86B
	14	O01B O01C O01D O01E O01F O50A O50B O60A O60B O60C
	15	MSPNG SPNG
	Prä	A11C
G40.02	Prä	A11C
	01	B03A B03B B03C B76A B76B B76C B76D B76E B76F B76G B76H B86B
	14	O01B O01C O01D O01E O01F O50A O50B O60A O60B O60C
G40.2	Prä	A11C
	01	B03A B03B B03C B70A B70B B70D B76A B76B B76C B76D B76E B76F B76G B76H B86B
	14	O01B O01C O01D O01E O01F O50A O50B O60A O60B O60C
G40.3	01	B03A B03B B03C B70A B70B B70D B76A B76B B76C B76D B76E B76F B76G B76H B86B
	14	O01B O01C O01D O01E O01F O50A O50B O60A O60B O60C
	15	MSPNG SPNG
	Prä	A11C
G40.4	Prä	A11C
	01	B03A B03B B03C B70A B70B B70D B76A B76B B76C B76D B76E B76F B76G B76H B86B
	14	O01B O01C O01D O01E O01F O50A O50B O60A O60B O60C
G40.5	Prä	A11C
	01	B03A B03B B03C B70A B70B B70D B76A B76B B76C B76D B76E B76F B76G B76H B86B
	14	O01B O01C O01D O01E O01F O50A O50B O60A O60B O60C
G40.6	Prä	A11C
	01	B03A B03B B03C B70A B70B B70D B76A B76B B76C B76D B76E B76F B76G B76H B86B
	14	O01B O01C O01D O01E O01F O50A O50B O60A O60B O60C
G40.7	01	B03A B03B B03C B76A B76B B76C B76D B76E B76F B76G B76H B86B
	14	O01B O01C O01D O01E O01F O50A O50B O60A O60B O60C
G40.08	Prä	A11C
	01	B03A B03B B03C B76A B76B B76C B76D B76E B76F B76G B76H B86B
	14	O01B O01C O01D O01E O01F O50A O50B O60A O60B O60C
G40.8	01	B03A B03B B03C B76A B76B B76C B76D B76E B76F B76G B76H B86B
	14	O01B O01C O01D O01E O01F O50A O50B O60A O60B O60C
G40.09	Prä	A11C
	01	B03A B03B B03C B76A B76B B76C B76D B76E B76F B76G B76H B86B
	14	O01B O01C O01D O01E O01F O50A O50B O60A O60B O60C
G40.9	01	B76A B76B B76C B76D B76E B76F B76G B76H B86B
	14	O01B O01C O01D O01E O01F O50A O50B O60A O60B O60C
G41.0	Prä	A11C
	01	B03A B03B B03C B70A B70B B70D B76A B76B B76C B76D B76E B76F B76G B86B
	14	O01B O01C O01D O01E O01F O50A O50B O60A O60B O60C
G41.1	Prä	A11C
	01	B03A B03B B03C B76A B76B B76C B76D B76E B76F B76G B86B
	14	O01B O01C O01D O01E O01F O50A O50B O60A O60B O60C
G41.2	Prä	A11C

DIAG

ICD	MDC	DRG
	01	B03A B03B B03C
		B70A B70B B70D
		B76A B76B B76C
		B76D B76E B76F
		B76G B86B
	14	O01B O01C O01D
		O01E O01F O50A
		O50B O60A O60B
		O60C
G41.8	01	B03A B03B B03C
		B76A B76B B76C
		B76D B76E B76F
		B76G B86B
	14	O01B O01C O01D
		O01E O01F O50A
		O50B O60A O60B
		O60C
G41.9	01	B76A B76B B76C
		B76D B76E B76F
		B76G B76H B86B
	14	O01B O01C O01D
		O01E O01F O50A
		O50B O60A O60B
		O60C
G43.0	01	B03A B03B B03C
		B77A B77B
G43.1	01	B03A B03B B03C
		B77A B77B
G43.2	01	B03A B03B B03C
		B77A B77B
G43.3	01	B03A B03B B03C
		B77A B77B
G43.8	01	B03A B03B B03C
		B77A B77B
G43.9	01	B81A B81B B81C
G44.0	01	B03A B03B B03C
		B77A B77B
G44.1	01	B03A B03B B03C
		B77A B77B
G44.2	01	B77A B77B
G44.3	01	B77A B77B
G44.4	01	B03A B03B B03C
		B77A B77B
G44.8	01	B77A B77B
G45.02	01	B03A B03B B03C
		B69A B69B B69C
G45.03	01	B03A B03B B03C
		B69A B69B B69C
G45.09	01	B03A B03B B03C
		B69A B69B B69C
		B81A B81B B81C
G45.12	01	B03A B03B B03C
		B69A B69B B69C
G45.13	01	B03A B03B B03C
		B69A B69B B69C
G45.19	01	B69A B69B B69C
		B81A B81B B81C
G45.22	01	B03A B03B B03C
		B69A B69B B69C
G45.23	01	B03A B03B B03C
		B69A B69B B69C
G45.29	01	B69A B69B B69C
		B81A B81B B81C
G45.32	01	B69A B69B B69C
G45.33	01	B69A B69B B69C
G45.39	01	B69A B69B B69C
G45.42	01	B03A B03B B03C
		B69A B69B B69C
G45.43	01	B03A B03B B03C
		B69A B69B B69C

ICD	MDC	DRG
G45.49	01	B69A B69B B69C
		B81A B81B B81C
G45.82	01	B03A B03B B03C
		B69A B69B B69C
G45.83	01	B03A B03B B03C
		B69A B69B B69C
G45.89	01	B69A B69B B69C
		B81A B81B B81C
G45.92	01	B03A B03B B03C
		B69A B69B B69C
G45.93	01	B03A B03B B03C
		B69A B69B B69C
G45.99	01	B69A B69B B69C
		B81A B81B B81C
G46.0	Prä	961Z
G46.1	Prä	961Z
G46.2	Prä	961Z
G46.3	Prä	961Z
G46.4	Prä	961Z
G46.5	Prä	961Z
G46.6	Prä	961Z
G46.7	Prä	961Z
G46.8	Prä	961Z
G47.0	19	U64A U64B
G47.1	19	U64A U64B
G47.2	19	U64A U64B
G47.4	01	B03A B03B B03C
		B81A B81B B81C
G47.8	19	U64A U64B
G47.9	19	U64A U64B
G47.30	04	E07Z E63A E63B
G47.31	04	E07Z E63A E63B
G47.32	04	E07Z E63A E63B
G47.38	04	E07Z E63A E63B
G47.39	04	E07Z E63A E63B
G50.0	01	B03A B03B B03C
		B71A B71B B71C
G50.1	01	B03A B03B B03C
		B71A B71B B71C
G50.8	01	B03A B03B B03C
		B71A B71B B71C
G50.9	01	B81A B81B B81C
G51.0	01	B03A B03B B03C
		B71A B71B B71C
	15	MSPNG SPNG
G51.1	01	B03A B03B B03C
		B71A B71B B71C
G51.2	01	B03A B03B B03C
		B71A B71B B71C
G51.3	01	B03A B03B B03C
		B71A B71B B71C
G51.4	01	B03A B03B B03C
		B71A B71B B71C
G51.8	01	B03A B03B B03C
		B71A B71B B71C
G51.9	01	B81A B81B B81C
G52.0	01	B03A B03B B03C
		B71A B71B B71C
G52.1	01	B03A B03B B03C
		B71A B71B B71C
G52.2	01	B03A B03B B03C
		B71A B71B B71C
G52.3	01	B03A B03B B03C
		B71A B71B B71C
G52.7	01	B03A B03B B03C
		B71A B71B B71C
	15	MSPNG SPNG
G52.8	01	B71A B71B B71C
		B81A B81B B81C
G52.9	01	B81A B81B B81C

ICD	MDC	DRG
G53.0	Prä	961Z
G53.1	15	MSPNG SPNG
	Prä	961Z
G53.2	15	MSPNG SPNG
	Prä	961Z
G53.3	15	MSPNG SPNG
	Prä	961Z
G53.8	Prä	961Z
G54.0	01	B03A B03B B03C
		B71A B71B B71C
	15	P65B P66B P66C
		P67A P67B P67C
G54.1	01	B03A B03B B03C
		B71A B71B B71C
	15	MSPNG SPNG
G54.2	01	B03A B03B B03C
		B71A B71B B71C
G54.3	01	B03A B03B B03C
		B71A B71B B71C
G54.4	01	B03A B03B B03C
		B71A B71B B71C
G54.5	01	B03A B03B B03C
		B71A B71B B71C
G54.6	01	B03A B03B B03C
		B71A B71B B71C
G54.7	01	B03A B03B B03C
		B71A B71B B71C
G54.8	01	B03A B03B B03C
		B71A B71B B71C
G54.9	01	B71A B71B B71C
		B81A B81B B81C
G55.0	Prä	961Z
G55.1	15	MSPNG SPNG
	Prä	961Z
G55.2	15	MSPNG SPNG
	Prä	961Z
G55.3	Prä	961Z
G55.8	Prä	961Z
G56.0	01	B03A B03B B03C
		B82Z
G56.1	01	B03A B03B B03C
		B71A B71B B71C
G56.2	01	B03A B03B B03C
		B71A B71B B71C
G56.3	01	B03A B03B B03C
		B71A B71B B71C
G56.8	01	B03A B03B B03C
		B71A B71B B71C
G56.9	01	B81A B81B B81C
G57.0	01	B03A B03B B03C
		B71A B71B B71C
G57.1	01	B03A B03B B03C
		B71A B71B B71C
G57.2	01	B03A B03B B03C
		B71A B71B B71C
G57.3	01	B03A B03B B03C
		B71A B71B B71C
G57.4	01	B03A B03B B03C
		B71A B71B B71C
G57.5	01	B03A B03B B03C
		B71A B71B B71C
G57.6	01	B03A B03B B03C
		B71A B71B B71C
G57.8	01	B03A B03B B03C
		B71A B71B B71C
G57.9	01	B81A B81B B81C
G58.0	01	B03A B03B B03C
		B82Z
G58.7	01	B03A B03B B03C
		B71A B71B B71C

ICD	MDC	DRG
G58.8	01	B71A B71B B71C
G58.9	01	B81A B81B B81C
G59.0	Prä	961Z
G59.8	Prä	961Z
G60.0	Prä	A11C
	01	B03A B03B B03C
		B71A B71B B71C
G60.1	Prä	A11C
	01	B03A B03B B03C
		B81A B81B B81C
G60.2	Prä	A11C
	01	B03A B03B B03C
		B71A B71B B71C
G60.3	Prä	A11C
	01	B03A B03B B03C
		B71A B71B B71C
G60.8	Prä	A11C
	01	B03A B03B B03C
		B71A B71B B71C
G60.9	Prä	A11C
	01	B81A B81B B81C
G61.0	Prä	A11C
	01	B03A B03B B03C
		B71A B71B B71C
G61.1	Prä	A11C
	01	B03A B03B B03C
		B71A B71B B71C
G61.8	Prä	A11C
	01	B03A B03B B03C
		B71A B71B B71C
G61.9	Prä	A11C
	01	B71A B71B B71C
G62.0	Prä	A11C
	01	B03A B03B B03C
		B71A B71B B71C
G62.1	Prä	A11C
	01	B03A B03B B03C
		B71A B71B B71C
G62.2	Prä	A11C
	01	B03A B03B B03C
		B71A B71B B71C
G62.9	Prä	A11C
	01	B81A B81B B81C
G62.80	Prä	A11C
	01	B03A B03B B03C
		B71A B71B B71C
G62.88	Prä	A11C
	01	B03A B03B B03C
		B71A B71B B71C
G63.0	Prä	961Z A11C
G63.1	Prä	961Z A11C
G63.2	Prä	961Z A11C
	10	K60B
G63.3	Prä	961Z A11C
G63.4	Prä	961Z A11C
G63.5	Prä	961Z A11C
G63.6	Prä	961Z A11C
G63.8	Prä	961Z A11C
G64	Prä	A11C
	01	B03A B03B B03C
		B71A B71B B71C
G70.0	01	B03A B03B B03C
		B85A
	15	MSPNG SPNG
	Prä	A11C
G70.1	Prä	A11C
	01	B03A B03B B03C
		B71A B71B B71C
G70.2	01	B03A B03B B03C
		B85A B85B

ICD	MDC	DRG
	15	MSPNG SPNG
	Prä	A11C
G70.8	01	B03A B03B B03C
		B71A B71B B71C
	15	MSPNG SPNG
	Prä	A11C
G70.9	Prä	A11C
	01	B81A B81B B81C
G71.0	01	B03A B03B B03C
		B85A B85B
	15	MSPNG SPNG
	Prä	A11C
G71.1	01	B03A B03B B03C
		B81A B81B B81C
	15	MSPNG SPNG
	Prä	A11C
G71.2	01	B03A B03B B03C
		B85A B85B
	15	MSPNG SPNG
	Prä	A11C
G71.3	Prä	A11C
	01	B03A B03B B03C
		B85A B85B
G71.8	Prä	A11C
	01	B03A B03B B03C
		B85A B85B
G71.9	01	B81A B81B B81C
	15	MSPNG SPNG
	Prä	A11C
G72.0	Prä	A11C
	01	B03A B03B B03C
		B81A B81B B81C
G72.1	Prä	A11C
	01	B03A B03B B03C
		B81A B81B B81C
G72.2	Prä	A11C
	01	B03A B03B B03C
		B81A B81B B81C
G72.3	Prä	A11C
	01	B03A B03B B03C
		B85A B85B
G72.4	Prä	A11C
	01	B03A B03B B03C
		B85A
G72.9	Prä	A11C
	01	B81A B81B B81C
G72.80	Prä	A11C
	01	B03A B03B B03C
		B85A B85B
G72.88	Prä	A11C
	01	B03A B03B B03C
		B85A B85B
G73.0	Prä	961Z A11C
G73.1	Prä	961Z A11C
G73.2	Prä	961Z A11C
G73.3	Prä	961Z A11C
G73.4	Prä	961Z A11C
G73.5	Prä	961Z A11C
G73.6	Prä	961Z A11C
G73.7	Prä	961Z A11C
G80.0	Prä	A11C A97C A97D
	01	B03A B03B B03C
		B17A B85A
	02	C03A
	07	H62A
	08	I02A I02B I02C
		I06A I06B I06C
		I08A I20A I20C
	18B	T01B
G80.1	Prä	A11C A97C A97D

ICD	MDC	DRG
	01	B03A B03B B03C
		B17A B85A
	02	C03A
	07	H62A
	08	I02A I02B I02C
		I06A I06B I06C
		I08A I20A I20C
	18B	T01B
G80.2	Prä	A11C A97C A97D
	01	B03A B03B B03C
		B17A B85A
	02	C03A
	07	H62A
	08	I02A I02B I02C
		I06A I06B I06C
		I08A I20A I20C
	18B	T01B
G80.3	Prä	A11C A97C A97D
	01	B03A B03B B03C
		B17A B85A
	02	C03A
	07	H62A
	08	I02A I02B I02C
		I06A I06B I06C
		I08A I20A I20C
	18B	T01B
G80.4	Prä	A11C A97C A97D
	01	B03A B03B B03C
		B17A B85A
	02	C03A
	07	H62A
	08	I02A I02B I02C
		I06A I06B I06C
		I08A I20A I20C
	18B	T01B
G80.8	Prä	A11C A97C A97D
	01	B03A B03B B03C
		B17A B85A
	02	C03A
	07	H62A
	08	I02A I02B I02C
		I06A I06B I06C
		I08A I20A I20C
	18B	T01B
G80.9	Prä	A11C
	01	B85A B85B
	08	I20A I20C
G81.0	Prä	A11C
	01	B03A B03B B03C
		B85A B85B
G81.1	Prä	A11C
	01	B03A B03B B03C
		B85A B85B
G81.9	Prä	A11C
	01	B81A B81B B81C
G82.00	Prä	B61A B61B B61C
		B61D B61E
	01	B60A B60B B66A
		B68A B70A B81A
		B85A B86B
	04	E36A E36B E36C
		E63A E70A E70B
		E71A E77A E86B
	05	F67A F73A F75C
	06	G67A G67B G86C
	07	H64A
	08	I02A I02B I02C
		I06A I06B I06C
		I10B I60A I61A
		I65A I68A I68B

DIAG

ICD	MDC	DRG
		I71A I77A
	09	J11A
	10	K60B K62A K64A
	11	L18A L38Z L42A
		L60A L60B L62A
		L63A L63C L64A
		L68A
	16	Q60B
	17	R62A
	18B	T60B T60D
	19	U64A
	21A	W01A W01B W01C
		W01D
	23	Z86A
G82.01	Prä	B61A B61B B61C
		B61D B61E
	01	B60A B60B B66A
		B68A B70A B81A
		B85A B86B
	04	E36A E36B E36C
		E63A E70A E70B
		E71A E77A E86B
	05	F67A F73A F75C
	06	G67A G67B G86C
	07	H64A
	08	I02A I02B I02C
		I06A I06B I06C
		I10B I60A I61A
		I65A I68A I68B
		I71A I77A
	09	J11A
	10	K60B K62A K64A
	11	L18A L38Z L42A
		L60A L60B L62A
		L63A L63C L64A
		L68A
	16	Q60B
	17	R62A
	18B	T60B T60D
	19	U64A
	21A	W01A W01B W01C
		W01D
	23	Z86A
G82.02	Prä	A94A A94B A94C
		A97D B61A B61B
		B61C B61D B61E
	01	B60A B60B B66A
		B68A B70A B71A
		B71B B81A B85A
		B86B
	04	E36A E36B E36C
		E63A E70A E70B
		E71A E77A E86B
	05	F67A F73A F75C
	06	G67A G67B G86C
	07	H64A
	08	I02A I02B I02C
		I06A I06B I06C
		I10B I60A I61A
		I65A I68A I68B
		I71A I77A
	09	J11A J61A J61B
	10	K60B K62A K64A
	11	L18A L38Z L42A
		L60A L60B L62A
		L63A L63C L64A
		L68A
	16	Q60B
	17	R62A
	18B	T60B T60D
	19	U64A
	21A	W01A W01B W01C
		W01D
	23	Z86A
G82.03	Prä	A94A A94B A94C
		A97D B61A B61B
		B61C B61D B61E
	01	B60A B60B B66A
		B68A B70A B71A
		B71B B81A B85A
		B86B
	04	E36A E36B E36C
		E63A E70A E70B
		E71A E77A E86B
	05	F67A F73A F75C
	06	G67A G67B G86C
	07	H64A
	08	I02A I02B I02C
		I06A I06B I06C
		I10B I60A I61A
		I65A I68A I68B
		I71A I77A
	09	J11A J61A J61B
	10	K60B K62A K64A
	11	L18A L38Z L42A
		L60A L60B L62A
		L63A L63C L64A
		L68A
	16	Q60B
	17	R62A
	18B	T60B T60D
	19	U64A
	21A	W01A W01B W01C
		W01D
	23	Z86A
G82.09	01	B71A B71B B71C
		B81A B81B B81C
G82.10	Prä	B61A B61B B61C
		B61D B61E
	01	B60A B60B B66A
		B68A B70A B81A
		B85A B86B
	04	E36A E36B E36C
		E63A E70A E70B
		E71A E77A E86B
	05	F67A F73A F75C
	06	G67A G67B G86C
	07	H64A
	08	I02A I02B I02C
		I06A I06B I06C
		I10B I60A I61A
		I65A I68A I68B
		I71A I77A
	09	J11A
	10	K60B K62A K64A
	11	L18A L38Z L42A
		L60A L60B L62A
		L63A L63C L64A
		L68A
	16	Q60B
	17	R62A
	18B	T60B T60D
	19	U64A
	21A	W01A W01B W01C
		W01D
	23	Z86A
G82.11	Prä	B61A B61B B61C
		B61D B61E
	01	B60A B60B B66A
		B68A B70A B81A
		B85A B86B
	04	E36A E36B E36C
		E63A E70A E70B
		E71A E77A E86B
	05	F67A F73A F75C
	06	G67A G67B G86C
	07	H64A
	08	I02A I02B I02C
		I06A I06B I06C
		I10B I60A I61A
		I65A I68A I68B
		I71A I77A
	09	J11A
	10	K60B K62A K64A
	11	L18A L38Z L42A
		L60A L60B L62A
		L63A L63C L64A
		L68A
	16	Q60B
	17	R62A
	18B	T60B T60D
	19	U64A
	21A	W01A W01B W01C
		W01D
	23	Z86A
G82.12	Prä	A94A A94B A94C
		A97D B61A B61B
		B61C B61D B61E
	01	B60A B60B B66A
		B68A B70A B71A
		B71B B81A B85A
		B86B
	04	E36A E36B E36C
		E63A E70A E70B
		E71A E77A E86B
	05	F67A F73A F75C
	06	G67A G67B G86C
	07	H64A
	08	I02A I02B I02C
		I06A I06B I06C
		I10B I60A I61A
		I65A I68A I68B
		I71A I77A
	09	J11A J61A J61B
	10	K60B K62A K64A
	11	L18A L38Z L42A
		L60A L60B L62A
		L63A L63C L64A
		L68A
	16	Q60B
	17	R62A
	18B	T60B T60D
	19	U64A
	21A	W01A W01B W01C
		W01D
	23	Z86A
G82.13	Prä	A94A A94B A94C
		A97D B61A B61B
		B61C B61D B61E
	01	B60A B60B B66A
		B68A B70A B71A
		B71B B81A B85A
		B86B
	04	E36A E36B E36C
		E63A E70A E70B
		E71A E77A E86B
	05	F67A F73A F75C
	06	G67A G67B G86C
	07	H64A
	08	I02A I02B I02C

ICD	MDC	DRG
		I06A I06B I06C
		I10B I60A I61A
		I65A I68A I68B
		I71A I77A
	09	J11A J61A J61B
	10	K60B K62A K64A
	11	L18A L38Z L42A
		L60A L60B L62A
		L63A L63C L64A
		L68A
	16	Q60B
	17	R62A
	18B	T60B T60D
	19	U64A
	21A	W01A W01B W01C
		W01D
	23	Z86A
G82.19	01	B71A B71B B71C
		B81A B81B B81C
G82.20	Prä	B61A B61B B61C
		B61D B61E
	01	B60A B60B B66A
		B68A B70A B81A
		B85A B86B
	04	E36A E36B E36C
		E63A E70A E70B
		E71A E77A E86B
	05	F67A F73A F75C
	06	G67A G67B G86C
	07	H64A
	08	I02A I02B I02C
		I06A I06B I06C
		I10B I60A I61A
		I65A I68A I68B
		I71A I77A
	09	J11A
	10	K60B K62A K64A
	11	L18A L38Z L42A
		L60A L60B L62A
		L63A L63C L64A
		L68A
	16	Q60B
	17	R62A
	18B	T60B T60D
	19	U64A
	21A	W01A W01B W01C
		W01D
	23	Z86A
G82.21	Prä	B61A B61B B61C
		B61D B61E
	01	B60A B60B B66A
		B68A B70A B81A
		B85A B86B
	04	E36A E36B E36C
		E63A E70A E70B
		E71A E77A E86B
	05	F67A F73A F75C
	06	G67A G67B G86C
	07	H64A
	08	I02A I02B I02C
		I06A I06B I06C
		I10B I60A I61A
		I65A I68A I68B
		I71A I77A
	09	J11A
	10	K60B K62A K64A
	11	L18A L38Z L42A
		L60A L60B L62A
		L63A L63C L64A
		L68A
	16	Q60B
	17	R62A
	18B	T60B T60D
	19	U64A
	21A	W01A W01B W01C
		W01D
	23	Z86A
G82.22	Prä	A94A A94B A94C
		A97D B61A B61B
		B61C B61D B61E
	01	B60A B60B B66A
		B68A B70A B71A
		B71B B81A B85A
		B86B
	04	E36A E36B E36C
		E63A E70A E70B
		E71A E77A E86B
	05	F67A F73A F75C
	06	G67A G67B G86C
	07	H64A
	08	I02A I02B I02C
		I06A I06B I06C
		I10B I60A I61A
		I65A I68A I68B
		I71A I77A
	09	J11A J61A J61B
	10	K60B K62A K64A
	11	L18A L38Z L42A
		L60A L60B L62A
		L63A L63C L64A
		L68A
	16	Q60B
	17	R62A
	18B	T60B T60D
	19	U64A
	21A	W01A W01B W01C
		W01D
	23	Z86A
G82.23	Prä	A94A A94B A94C
		A97D B61A B61B
		B61C B61D B61E
	01	B60A B60B B66A
		B68A B70A B71A
		B71B B81A B85A
		B86B
	04	E36A E36B E36C
		E63A E70A E70B
		E71A E77A E86B
	05	F67A F73A F75C
	06	G67A G67B G86C
	07	H64A
	08	I02A I02B I02C
		I06A I06B I06C
		I10B I60A I61A
		I65A I68A I68B
		I71A I77A
	09	J11A J61A J61B
	10	K60B K62A K64A
	11	L18A L38Z L42A
		L60A L60B L62A
		L63A L63C L64A
		L68A
	16	Q60B
	17	R62A
	18B	T60B T60D
	19	U64A
	21A	W01A W01B W01C
		W01D
	23	Z86A
G82.29	01	B81A B81B B81C
G82.30	01	B60A B60B B66A
		B68A B70A B81A
		B85A B86B
	04	E36A E36B E36C
		E63A E70A E70B
		E71A E77A E86B
	05	F67A F73A F75C
	06	G67A G67B G86C
	07	H64A
	08	I02A I02B I02C
		I06A I06B I06C
		I10B I60A I61A
		I65A I68A I68B
		I71A I77A
	09	J11A
	10	K60B K62A K64A
	11	L18A L38Z L42A
		L60A L60B L62A
		L63A L63C L64A
		L68A
	15	MSPNG SPNG
	16	Q60B
	17	R62A
	18B	T60B T60D
	19	U64A
	21A	W01A W01B W01C
		W01D
	23	Z86A
	Prä	B61A B61B B61C
		B61D B61E
G82.31	Prä	B61A B61B B61C
		B61D B61E
	01	B60A B60B B66A
		B68A B70A B81A
		B85A B86B
	04	E36A E36B E36C
		E63A E70A E70B
		E71A E77A E86B
	05	F67A F73A F75C
	06	G67A G67B G86C
	07	H64A
	08	I02A I02B I02C
		I06A I06B I06C
		I10B I60A I61A
		I65A I68A I68B
		I71A I77A
	09	J11A
	10	K60B K62A K64A
	11	L18A L38Z L42A
		L60A L60B L62A
		L63A L63C L64A
		L68A
	16	Q60B
	17	R62A
	18B	T60B T60D
	19	U64A
	21A	W01A W01B W01C
		W01D
	23	Z86A
G82.32	01	B60A B60B B66A
		B68A B70A B71A
		B71B B81A B85A
		B86B
	04	E36A E36B E36C
		E63A E70A E70B
		E71A E77A E86B
	05	F67A F73A F75C
	06	G67A G67B G86C
	07	H64A
	08	I02A I02B I02C

DIAG

ICD	MDC	DRG
		I06A I06B I06C
		I10B I60A I61A
		I65A I68A I68B
		I71A I77A
	09	J11A J61A J61B
	10	K60B K62A K64A
	11	L18A L38Z L42A
		L60A L60B L62A
		L63A L63C L64A
		L68A
	15	MSPNG SPNG
	16	Q60B
	17	R62A
	18B	T60B T60D
	19	U64A
	21A	W01A W01B W01C
		W01D
	23	Z86A
	Prä	A94A A94B A94C
		A97D B61A B61B
		B61C B61D B61E
G82.33	Prä	A94A A94B A94C
		A97D B61A B61B
		B61C B61D B61E
	01	B60A B60B B66A
		B68A B70A B71A
		B71B B81A B85A
		B86B
	04	E36A E36B E36C
		E63A E70A E70B
		E71A E77A E86B
	05	F67A F73A F75C
	06	G67A G67B G86C
	07	H64A
	08	I02A I02B I02C
		I06A I06B I06C
		I10B I60A I61A
		I65A I68A I68B
		I71A I77A
	09	J11A J61A J61B
	10	K60B K62A K64A
	11	L18A L38Z L42A
		L60A L60B L62A
		L63A L63C L64A
		L68A
	16	Q60B
	17	R62A
	18B	T60B T60D
	19	U64A
	21A	W01A W01B W01C
		W01D
	23	Z86A
G82.39	01	B71A B71B B71C
		B81A B81B B81C
	15	MSPNG SPNG
G82.40	01	B60A B60B B66A
		B68A B70A B81A
		B85A B86B
	04	E36A E36B E36C
		E63A E70A E70B
		E71A E77A E86B
	05	F67A F73A F75C
	06	G67A G67B G86C
	07	H64A
	08	I02A I02B I02C
		I06A I06B I06C
		I10B I60A I61A
		I65A I68A I68B
		I71A I77A
	09	J11A
	10	K60B K62A K64A
	11	L18A L38Z L42A
		L60A L60B L62A
		L63A L63C L64A
		L68A
	15	MSPNG SPNG
	16	Q60B
	17	R62A
	18B	T60B T60D
	19	U64A
	21A	W01A W01B W01C
		W01D
	23	Z86A
	Prä	B61A B61B B61C
		B61D B61E
G82.41	Prä	B61A B61B B61C
		B61D B61E
	01	B60A B60B B66A
		B68A B70A B81A
		B85A B86B
	04	E36A E36B E36C
		E63A E70A E70B
		E71A E77A E86B
	05	F67A F73A F75C
	06	G67A G67B G86C
	07	H64A
	08	I02A I02B I02C
		I06A I06B I06C
		I10B I60A I61A
		I65A I68A I68B
		I71A I77A
	09	J11A
	10	K60B K62A K64A
	11	L18A L38Z L42A
		L60A L60B L62A
		L63A L63C L64A
		L68A
	16	Q60B
	17	R62A
	18B	T60B T60D
	19	U64A
	21A	W01A W01B W01C
		W01D
	23	Z86A
G82.42	01	B60A B60B B66A
		B68A B70A B71A
		B71B B81A B85A
		B86B
	04	E36A E36B E36C
		E63A E70A E70B
		E71A E77A E86B
	05	F67A F73A F75C
	06	G67A G67B G86C
	07	H64A
	08	I02A I02B I02C
		I06A I06B I06C
		I10B I60A I61A
		I65A I68A I68B
		I71A I77A
	09	J11A J61A J61B
	10	K60B K62A K64A
	11	L18A L38Z L42A
		L60A L60B L62A
		L63A L63C L64A
		L68A
	15	MSPNG SPNG
	16	Q60B
	17	R62A
	18B	T60B T60D
	19	U64A
	21A	W01A W01B W01C
		W01D
	23	Z86A
	Prä	A94A A94B A94C
		A97D B61A B61B
		B61C B61D B61E
G82.43	Prä	A94A A94B A94C
		A97D B61A B61B
		B61C B61D B61E
	01	B60A B60B B66A
		B68A B70A B71A
		B71B B81A B85A
		B86B
	04	E36A E36B E36C
		E63A E70A E70B
		E71A E77A E86B
	05	F67A F73A F75C
	06	G67A G67B G86C
	07	H64A
	08	I02A I02B I02C
		I06A I06B I06C
		I10B I60A I61A
		I65A I68A I68B
		I71A I77A
	09	J11A J61A J61B
	10	K60B K62A K64A
	11	L18A L38Z L42A
		L60A L60B L62A
		L63A L63C L64A
		L68A
	16	Q60B
	17	R62A
	18B	T60B T60D
	19	U64A
	21A	W01A W01B W01C
		W01D
	23	Z86A
G82.49	01	B71A B71B B71C
		B81A B81B B81C
	15	MSPNG SPNG
G82.50	01	B60A B60B B66A
		B68A B70A B81A
		B85A B86B
	04	E36A E36B E36C
		E63A E70A E70B
		E71A E77A E86B
	05	F67A F73A F75C
	06	G67A G67B G86C
	07	H64A
	08	I02A I02B I02C
		I06A I06B I06C
		I10B I60A I61A
		I65A I68A I68B
		I71A I77A
	09	J11A
	10	K60B K62A K64A
	11	L18A L38Z L42A
		L60A L60B L62A
		L63A L63C L64A
		L68A
	15	MSPNG SPNG
	16	Q60B
	17	R62A
	18B	T60B T60D
	19	U64A
	21A	W01A W01B W01C
		W01D
	23	Z86A
	Prä	B61A B61B B61C
		B61D B61E

ICD	MDC	DRG
G82.51	Prä	B61A B61B B61C
		B61D B61E
	01	B60A B60B B66A
		B68A B70A B81A
		B85A B86B
	04	E36A E36B E36C
		E63A E70A E70B
		E71A E77A E86B
	05	F67A F73A F75C
	06	G67A G67B G86C
	07	H64A
	08	I02A I02B I02C
		I06A I06B I06C
		I10B I60A I61A
		I65A I68A I68B
		I71A I77A
	09	J11A
	10	K60B K62A K64A
	11	L18A L38Z L42A
		L60A L60B L62A
		L63A L63C L64A
		L68A
	16	Q60B
	17	R62A
	18B	T60B T60D
	19	U64A
	21A	W01A W01B W01C
		W01D
	23	Z86A
G82.52	01	B60A B60B B66A
		B68A B70A B71A
		B71B B81A B85A
		B86B
	04	E36A E36B E36C
		E63A E70A E70B
		E71A E77A E86B
	05	F67A F73A F75C
	06	G67A G67B G86C
	07	H64A
	08	I02A I02B I02C
		I06A I06B I06C
		I10B I60A I61A
		I65A I68A I68B
		I71A I77A
	09	J11A J61A J61B
	10	K60B K62A K64A
	11	L18A L38Z L42A
		L60A L60B L62A
		L63A L63C L64A
		L68A
	15	MSPNG SPNG
	16	Q60B
	17	R62A
	18B	T60B T60D
	19	U64A
	21A	W01A W01B W01C
		W01D
	23	Z86A
	Prä	A94A A94B A94C
		A97D B61A B61B
		B61C B61D B61E
G82.53	Prä	A94A A94B A94C
		A97D B61A B61B
		B61C B61D B61E
	01	B60A B60B B66A
		B68A B70A B71A
		B71B B81A B85A
		B86B
	04	E36A E36B E36C
		E63A E70A E70B
		E71A E77A E86B
	05	F67A F73A F75C
	06	G67A G67B G86C
	07	H64A
	08	I02A I02B I02C
		I06A I06B I06C
		I10B I60A I61A
		I65A I68A I68B
		I71A I77A
	09	J11A J61A J61B
	10	K60B K62A K64A
	11	L18A L38Z L42A
		L60A L60B L62A
		L63A L63C L64A
		L68A
	15	MSPNG SPNG
	16	Q60B
	17	R62A
	18B	T60B T60D
	19	U64A
	21A	W01A W01B W01C
		W01D
	23	Z86A
G82.59	01	B81A B81B B81C
	15	MSPNG SPNG
G82.60	Prä	961Z A46B
G82.61	Prä	961Z A46B
G82.62	Prä	961Z A46B
G82.63	Prä	961Z A46B
G82.64	Prä	961Z
G82.65	Prä	961Z
G82.66	Prä	961Z
G82.67	Prä	961Z
G82.69	Prä	961Z
G83.0	01	B03A B03B B03C
		B85A B85B
	15	MSPNG SPNG
G83.1	01	B03A B03B B03C
		B81A B81B B81C
	15	MSPNG SPNG
G83.2	01	B03A B03B B03C
		B81A B81B B81C
	15	MSPNG SPNG
G83.3	01	B81A B81B B81C
	15	MSPNG SPNG
G83.5	Prä	A43A A43B A94A
		A94B A94C A97D
		B61A B61B B61C
		B61D B61E
	01	B03A B03B B03C
		B60A B60B B66A
		B68A B70A B71A
		B71B B81A B85A
		B86B
	04	E36A E36B E36C
		E63A E70A E70B
		E71A E77A E86B
	05	F67A F73A F75C
	06	G67A G67B G86C
	07	H64A
	08	I02A I02B I02C
		I06A I06B I06C
		I10B I60A I61A
		I65A I68A I68B
		I71A I77A
	09	J11A J61A J61B
	10	K60B K62A K64A
	11	L18A L38Z L42A
		L60A L60B L62A
		L63A L63C L64A
		L68A
	16	Q60B
	17	R62A
	18B	T60B T60D
	19	U64A
	21A	W01A W01B W01C
		W01D
	23	Z86A
G83.6	01	B03A B03B B03C
		B85A B85B
G83.8	01	B03A B03B B03C
		B85A B85B
G83.9	01	B81A B81B B81C
G83.40	01	B03A B03B B03C
		B60A B60B
	15	MSPNG SPNG
	Prä	B61A B61B B61C
		B61D B61E
G83.41	01	B03A B03B B03C
		B60A B60B
	15	MSPNG SPNG
	Prä	B61A B61B B61C
		B61D B61E
G83.49	01	B81A B81B B81C
	15	MSPNG SPNG
G90.00	05	F66A F66B
G90.1	01	B03A B03B B03C
		B81A B81B B81C
G90.2	01	B03A B03B B03C
		B71A B71B B71C
G90.08	01	B03A B03B B03C
		B71A B71B B71C
G90.8	01	B03A B03B B03C
		B71A B71B B71C
G90.09	01	B81A B81B B81C
G90.9	01	B81A B81B B81C
G90.40	01	B03A B03B B03C
		B71A B71B B71C
G90.41	01	B03A B03B B03C
		B71A B71B B71C
G90.48	01	B03A B03B B03C
		B71A B71B B71C
G90.49	01	B03A B03B B03C
		B71A B71B B71C
		B81A B81B B81C
G90.50	01	B03A B03B B03C
		B71A B71B B71C
G90.51	01	B03A B03B B03C
		B71A B71B B71C
G90.59	01	B81A B81B B81C
G90.60	01	B03A B03B B03C
		B71A B71B B71C
G90.61	01	B03A B03B B03C
		B71A B71B B71C
G90.69	01	B71A B71B B71C
G90.70	08	I71A I71B
G90.71	08	I71A I71B
G90.79	08	I71A I71B
G91.0	Prä	A11C
	01	B85A B85B
G91.1	01	B85A B85B
	15	MSPNG SPNG
	Prä	A11C
G91.3	01	B81A B81B B81C
	15	MSPNG SPNG
G91.8	01	B85A B85B
	15	MSPNG SPNG
G91.9	01	B81A B81B B81C
	15	MSPNG SPNG
G91.20	01	B85A B85B
	15	MSPNG SPNG

DIAG

ICD	MDC	DRG
G91.21	01	B85A B85B
	15	MSPNG SPNG
G91.29	01	B81A B81B B81C
	15	MSPNG SPNG
G92.0	Prä	A11C
	01	B03A B03B B03C
		B81A B81B
G92.9	Prä	A11C
	01	B03A B03B B03C
		B81A B81B
G93.0	Prä	A11C
	01	B03A B03B B03C
		B81A B81B B81C
	15	P65B P66B P66C
		P67A P67B P67C
G93.1	01	B03A B03B B03C
		B85A B85B
G93.2	01	B03A B03B B03C
		B81A B81B B81C
G93.3	23	Z65A Z65B
G93.4	01	B81A B81B B81C
G93.5	Prä	A11C
	01	B03A B03B B03C
		B66A B66B B66C
G93.6	Prä	A11C
	01	B03A B03B B03C
		B66A B66B B66C
G93.7	Prä	A11C
	01	B81A B81B B81C
G93.9	01	B81A B81B B81C
G93.80	Prä	A43A A43B A94A
		A94B A94C A97D
		B61A B61B B61C
		B61D B61E
	01	B03A B03B B03C
		B60A B60B B63A
		B63B B66A B68A
		B70A B71A B71B
		B81A B85A B86B
	04	E36A E36B E36C
		E63A E70A E70B
		E71A E77A E86B
	05	F67A F73A F75C
	06	G67A G67B G86C
	07	H64A
	08	I02A I02B I02C
		I06A I06B I06C
		I10B I60A I61A
		I65A I68A I68B
		I71A I77A
	09	J11A J61A J61B
	10	K60B K62A K64A
	11	L18A L38Z L42A
		L60A L60B L62A
		L63A L63C L64A
		L68A
	16	Q60B
	17	R62A
	18B	T60B T60D
	19	U64A
	21A	W01A W01B W01C
		W01D
	23	Z86A
G93.88	01	B03A B03B B03C
		B63A B63B
G94.0	15	MSPNG SPNG
	Prä	961Z
G94.1	15	MSPNG SPNG
	Prä	961Z
G94.2	15	MSPNG SPNG

ICD	MDC	DRG
	Prä	961Z
G94.8	Prä	961Z
G94.30	Prä	961Z
G94.31	Prä	961Z
G94.32	Prä	961Z
G94.39	Prä	961Z
G95.0	01	B03A B03B B03C
		B85A B85B
G95.2	01	B81A B81B B81C
	15	MSPNG SPNG
G95.9	01	B81A B81B B81C
	15	MSPNG SPNG
G95.10	01	B81A B81B
	15	MSPNG SPNG
G95.18	01	B81A B81B
	15	MSPNG SPNG
G95.80	11	L68A L68B L68C
G95.81	11	L68A L68B L68C
G95.82	Prä	B61A B61B B61C
		B61D B61E
	01	B60A B60B
G95.83	Prä	B61A B61B B61C
		B61D B61E
	01	B60A B60B
G95.84	01	B03A B03B B03C
		B60A B60B
G95.85	Prä	B61A B61B B61C
		B61D B61E
	01	B60A B60B
G95.88	01	B81A B81B B81C
G96.0	01	B03A B03B B03C
		B81A B81B B81C
	15	MSPNG SPNG
G96.1	01	B03A B03B B03C
		B81A B81B B81C
G96.8	01	B03A B03B B03C
		B72A B72B
G96.9	01	B81A B81B B81C
G97.0	01	B03A B03B B03C
		B81A B81B B81C
	15	MSPNG SPNG
G97.1	01	B03A B03B B03C
		B77A B77B
G97.2	01	B81A B81B B81C
G97.9	01	B81A B81B B81C
G97.80	01	B81A B81B B81C
G97.81	01	B81A B81B B81C
G97.82	01	B81A B81B B81C
G97.83	01	B81A B81B B81C
G97.84	01	B81A B81B B81C
G97.88	01	B81A B81B B81C
G98	01	B03A B03B B03C
		B63A B63B
G99.00	Prä	961Z
G99.1	Prä	961Z
G99.2	Prä	961Z
G99.08	Prä	961Z
G99.8	Prä	961Z
H00.0	02	C63A C63B C63C
H00.1	02	C64Z
H01.0	02	C63A C63B C63C
H01.1	02	C63A C63B C63C
H01.8	02	C63A C63B C63C
H01.9	02	C63A C63B C63C
H02.0	02	C64Z
H02.1	02	C64Z
H02.2	02	C64Z
H02.3	02	C64Z
H02.4	02	C61A C61B
H02.5	02	C64Z

ICD	MDC	DRG
H02.6	09	J67Z
H02.7	02	C64Z
H02.8	02	C64Z
H02.9	02	C64Z
H03.0	Prä	961Z
H03.1	Prä	961Z
H03.8	Prä	961Z
H04.0	02	C63A C63B C63C
H04.1	02	C63A C63B C63C
H04.2	02	C63A C63B C63C
H04.3	02	C63A C63B C63C
H04.4	02	C63A C63B C63C
H04.5	02	C64Z
H04.6	02	C64Z
H04.8	02	C64Z
H04.9	02	C64Z
H05.0	02	C60A C60B
	15	P65B P66B P66C
		P67A P67B P67C
H05.1	02	C63A C63B C63C
H05.2	02	C63A C63B C63C
H05.3	02	C63A C63B C63C
H05.4	02	C63A C63B C63C
H05.5	02	C62Z
H05.8	02	C63A C63B C63C
H05.9	02	C63A C63B C63C
H06.0	Prä	961Z
H06.1	Prä	961Z
H06.2	Prä	961Z
H06.3	Prä	961Z
H10.0	02	C63A C63B C63C
H10.1	02	C63A C63B C63C
H10.2	02	C63A C63B C63C
H10.3	02	C63A C63B C63C
H10.4	02	C63A C63B C63C
	15	P65B P66B P66C
		P67A P67B P67C
H10.5	02	C63A C63B C63C
H10.8	02	C63A C63B C63C
H10.9	02	C63A C63B C63C
H11.0	02	C63A C63B C63C
H11.1	02	C63A C63B C63C
H11.2	02	C63A C63B C63C
H11.3	02	C62Z
H11.4	02	C63A C63B C63C
H11.8	02	C63A C63B C63C
H11.9	02	C63A C63B C63C
H13.0	Prä	961Z
H13.1	Prä	961Z
H13.2	Prä	961Z
H13.3	15	MSPNG SPNG
	Prä	961Z
H13.8	Prä	961Z
H15.0	02	C63A C63B C63C
H15.1	02	C63A C63B C63C
H15.8	02	C63A C63B C63C
H15.9	02	C63A C63B C63C
H16.0	02	C60A C60B
H16.1	02	C63A C63B C63C
H16.2	02	C63A C63B C63C
H16.3	02	C60A C60B
H16.4	02	C63A C63B C63C
H16.8	02	C60A C60B
	15	MSPNG SPNG
H16.9	02	C63A C63B C63C
H17.0	02	C63A C63B C63C
H17.1	02	C63A C63B C63C
H17.8	02	C63A C63B C63C
H17.9	02	C63A C63B C63C
H18.0	02	C63A C63B C63C

ICD	MDC	DRG
H18.1	02	C63A C63B C63C
H18.2	02	C63A C63B C63C
H18.3	02	C63A C63B C63C
H18.4	02	C63A C63B C63C
H18.5	02	C63A C63B C63C
H18.6	02	C63A C63B C63C
H18.7	02	C63A C63B C63C
H18.8	02	C63A C63B C63C
H18.9	02	C63A C63B C63C
H19.0	Prä	961Z
H19.1	15	MSPNG SPNG
	Prä	961Z
H19.2	15	MSPNG SPNG
	Prä	961Z
H19.3	Prä	961Z
H19.8	Prä	961Z
H20.0	02	C63A C63B
H20.1	02	C63A C63B
H20.2	02	C63A C63B
H20.8	02	C63A C63B
H20.9	02	C63A C63B
H21.0	02	C62Z
H21.1	02	C63A C63B C63C
H21.2	02	C63A C63B C63C
H21.3	02	C63A C63B C63C
H21.4	02	C63A C63B C63C
H21.5	02	C63A C63B C63C
H21.8	02	C63A C63B C63C
H21.9	02	C63A C63B C63C
H22.0	Prä	961Z
H22.1	Prä	961Z
H22.8	Prä	961Z
H25.0	02	C64Z
H25.1	02	C64Z
H25.2	02	C64Z
H25.8	02	C64Z
H25.9	02	C64Z
H26.0	02	C63A C63B C63C
H26.1	02	C62Z
H26.2	02	C63A C63B C63C
H26.3	02	C64Z
H26.4	02	C64Z
H26.8	02	C64Z
H26.9	02	C64Z
H27.0	02	C63A C63B C63C
H27.1	02	C63A C63B C63C
H27.8	02	C63A C63B C63C
H27.9	02	C63A C63B C63C
H28.0	Prä	961Z
H28.1	Prä	961Z
H28.2	Prä	961Z
H28.8	Prä	961Z
H30.0	02	C63A C63B
H30.1	02	C63A C63B
H30.2	02	C63A C63B
H30.8	02	C63A C63B
H30.9	02	C63A C63B
H31.0	02	C62Z
H31.1	02	C63A C63B C63C
H31.2	02	C63A C63B C63C
H31.3	02	C62Z
H31.4	02	C62Z
H31.8	02	C63A C63B C63C
H31.9	02	C63A C63B C63C
H32.0	15	MSPNG SPNG
	Prä	961Z
H32.8	Prä	961Z
H33.0	02	C62Z
H33.1	02	C63A C63B C63C
H33.2	02	C62Z
H33.3	02	C62Z
H33.4	02	C62Z
H33.5	02	C62Z
H34.0	02	C61A C61B
H34.1	02	C61A C61B
H34.2	02	C61A C61B
H34.8	02	C61A C61B
H34.9	02	C61A C61B
H35.0	02	C63A C63B C63C
H35.1	02	C63A C63B C63C
H35.2	02	C63A C63B C63C
H35.4	02	C63A C63B C63C
H35.5	02	C63A C63B C63C
H35.6	02	C62Z
H35.7	02	C63A C63B C63C
H35.8	02	C63A C63B C63C
H35.9	02	C63A C63B C63C
H35.30	02	C63A C63B C63C
H35.31	02	C63A C63B C63C
H35.38	02	C63A C63B C63C
H35.39	02	C63A C63B C63C
H36.0	Prä	961Z
	10	K60B
H36.8	Prä	961Z
H40.0	02	C64Z
H40.1	02	C64Z
H40.2	02	C64Z
H40.3	02	C64Z
H40.4	02	C64Z
H40.5	02	C64Z
H40.6	02	C64Z
H40.8	02	C64Z
H40.9	02	C64Z
H42.0	Prä	961Z
H42.8	Prä	961Z
H43.0	02	C63A C63B C63C
H43.1	02	C62Z
H43.2	02	C63A C63B C63C
H43.3	02	C63A C63B C63C
H43.8	02	C63A C63B C63C
H43.9	02	C63A C63B C63C
H44.0	02	C60A C60B
H44.1	02	C60A C60B
H44.2	02	C63A C63B C63C
H44.3	02	C63A C63B C63C
H44.4	02	C63A C63B C63C
H44.5	02	C63A C63B C63C
H44.6	02	C62Z
H44.7	02	C62Z
H44.8	02	C63A C63B C63C
H44.9	02	C63A C63B C63C
H45.0	Prä	961Z
H45.1	Prä	961Z
H45.8	Prä	961Z
H46	02	C61A C61B
H47.0	02	C61A C61B
H47.1	01	B81A B81B B81C
H47.2	02	C61A C61B
H47.3	02	C61A C61B
H47.4	01	B03A B03B B03C
		B81A B81B B81C
H47.5	01	B03A B03B B03C
		B81A B81B B81C
H47.6	01	B03A B03B B03C
		B81A B81B B81C
H47.7	01	B81A B81B B81C
H48.0	Prä	961Z
H48.1	Prä	961Z
H48.8	Prä	961Z
H49.0	02	C61A
H49.1	02	C61A
H49.2	02	C61A
H49.3	02	C61A
H49.4	02	C61A
H49.8	02	C61A
H49.9	02	C61A
H50.0	02	C61A C61B
H50.1	02	C61A C61B
H50.2	02	C61A C61B
H50.3	02	C61A C61B
H50.4	02	C61A C61B
H50.5	02	C61A C61B
H50.6	02	C63A C63B C63C
H50.8	02	C61A C61B
H50.9	02	C63A C63B C63C
H51.0	02	C63A C63B C63C
H51.1	02	C63A C63B C63C
H51.2	01	B03A B03B B03C
		B81A B81B B81C
H51.8	02	C61A C61B
H51.9	02	C63A C63B C63C
H52.0	02	C63A C63B C63C
H52.1	02	C63A C63B C63C
H52.2	02	C63A C63B C63C
H52.3	02	C63A C63B C63C
H52.4	02	C63A C63B C63C
H52.5	02	C63A C63B C63C
H52.6	02	C63A C63B C63C
H52.7	02	C63A C63B C63C
H53.0	02	C63A C63B C63C
H53.1	02	C63A C63B C63C
H53.2	02	C61A C61B
H53.3	02	C63A C63B C63C
H53.4	02	C61A C61B
H53.5	02	C63A C63B C63C
H53.6	02	C63A C63B C63C
H53.8	02	C63A C63B C63C
H53.9	02	C63A C63B C63C
H54.0	02	C63A C63B C63C
	10	K60B
H54.1	02	C63A C63B C63C
H54.2	02	C63A C63B C63C
H54.3	02	C63A C63B C63C
H54.4	02	C63A C63B C63C
H54.5	02	C63A C63B C63C
H54.6	02	C63A C63B C63C
H54.9	02	C63A C63B C63C
H55	02	C61A C61B
H57.0	02	C61A C61B
H57.1	02	C63A C63B C63C
H57.8	02	C63A C63B C63C
H57.9	02	C63A C63B C63C
H58.0	15	MSPNG SPNG
	Prä	961Z
H58.1	Prä	961Z
H58.8	Prä	961Z
H58.21	Prä	961Z
H58.22	Prä	961Z
H58.23	Prä	961Z A93A A97A
		A97B A97C A97D
	17	R50A R60A R60B
		R61A R61B R61C
H59.0	02	C63A C63B C63C
H59.8	02	C62Z
H59.9	02	C63A C63B C63C
H60.0	03	D66A D66B
H60.1	03	D66A D66B
H60.2	03	D09A D09B D28Z
		D60A D60B
H60.3	03	D66A D66B

DIAG

ICD	MDC	DRG
H60.4	03	D66A D66B
H60.5	03	D66A D66B
H60.8	03	D66A D66B
H60.9	03	D66A D66B
H61.0	03	D66A D66B
H61.1	03	D66A D66B
H61.2	03	D66A D66B
H61.3	03	D66A D66B
H61.8	03	D66A D66B
H61.9	03	D66A D66B
H62.0	Prä	961Z
H62.1	15	MSPNG SPNG
	Prä	961Z
H62.2	Prä	961Z
H62.3	Prä	961Z
H62.4	Prä	961Z
H62.8	Prä	961Z
H65.0	03	D62A D62B D62C
H65.1	03	D62A D62B D62C
H65.2	03	D62A D62B D62C
H65.3	03	D62A D62B D62C
H65.4	03	D62A D62B D62C
H65.9	03	D62A D62B D62C
H66.0	03	D62A D62B D62C
	15	MSPNG SPNG
H66.1	03	D62A D62B D62C
H66.2	03	D62A D62B D62C
H66.3	03	D62A D62B D62C
H66.4	03	D62A D62B D62C
H66.9	03	D62A D62B D62C
H67.0	Prä	961Z
H67.1	Prä	961Z
H67.8	Prä	961Z
H68.0	03	D62A D62B D62C
H68.1	03	D66A D66B
H69.0	03	D66A D66B
H69.8	03	D66A D66B
H69.9	03	D66A D66B
H70.0	03	D06B D62A D62B D62C
H70.1	03	D06B D62A D62B D62C
H70.2	03	D62A D62B D62C
H70.8	03	D66A D66B
H70.9	03	D62A D62B D62C
H71	03	D66A D66B
H72.0	03	D66A D66B
H72.1	03	D66A D66B
H72.2	03	D66A D66B
H72.8	03	D66A D66B
H72.9	03	D66A D66B
H73.0	03	D62A D62B D62C
H73.1	03	D62A D62B D62C
H73.8	03	D66A D66B
H73.9	03	D66A D66B
H74.0	03	D66A D66B
H74.1	03	D66A D66B
H74.2	03	D66A D66B
H74.3	03	D66A D66B
H74.4	03	D66A D66B
H74.8	03	D66A D66B
H74.9	03	D66A D66B
H75.0	Prä	961Z
H75.8	Prä	961Z
H80.0	03	D66A D66B
H80.1	03	D66A D66B
H80.2	03	D66A D66B
H80.8	03	D66A D66B
H80.9	03	D66A D66B
H81.0	03	D61A D61B
H81.1	03	D61A D61B
H81.2	03	D61A D61B
H81.3	03	D61A D61B
H81.4	03	D61A D61B
H81.8	03	D61A D61B
H81.9	03	D61A D61B
H82	Prä	961Z
H83.0	03	D61A D61B
H83.1	03	D66A D66B
H83.2	03	D61A D61B
H83.3	03	D66A D66B
H83.8	03	D66A D66B
H83.9	03	D66A D66B
H90.0	03	D66A D66B
H90.1	03	D66A D66B
H90.2	03	D66A D66B
H90.3	03	D66A D66B
H90.4	03	D66A D66B
H90.5	03	D66A D66B
H90.6	03	D66A D66B
H90.7	03	D66A D66B
H90.8	03	D66A D66B
H91.0	03	D61A D61B
H91.1	03	D66A D66B
H91.2	03	D61A D61B
H91.3	03	D66A D66B
H91.8	03	D66A D66B
H91.9	03	D66A D66B
H92.0	03	D66A D66B
H92.1	03	D66A D66B
H92.2	03	D66A D66B
H93.0	03	D66A D66B
H93.1	03	D61A D61B
H93.2	03	D66A D66B
H93.3	03	D61A D61B
H93.8	03	D66A D66B
H93.9	03	D66A D66B
H94.0	Prä	961Z
H94.8	Prä	961Z
H95.0	03	D66A D66B
H95.1	03	D66A D66B
H95.8	03	D66A D66B
H95.9	03	D66A D66B
I00	08	I66A I66B I66C
I01.0	05	F75A F75B F75C F75D
I01.1	Prä	A11C
	05	F61A F61B
I01.2	Prä	A11C
	05	F75A F75B F75C F75D
I01.8	05	F75A F75B F75C F75D
I01.9	05	F75A F75B F75C F75D
I02.0	05	F75A F75B F75C F75D
I02.9	05	F75A F75B F75C F75D
I05.0	05	F69A F69B
I05.1	05	F69A F69B
I05.2	05	F69A F69B
I05.8	05	F69A F69B
I05.9	05	F69A F69B
I06.0	05	F69A F69B
I06.1	05	F69A F69B
I06.2	05	F69A F69B
I06.8	05	F69A F69B
I06.9	05	F69A F69B
I07.0	05	F69A F69B
I07.1	05	F69A F69B
I07.2	05	F69A F69B
I07.8	05	F69A F69B
I07.9	05	F69A F69B
I08.0	05	F69A F69B
I08.1	05	F69A F69B
I08.2	05	F69A F69B
I08.3	05	F69A F69B
I08.8	05	F69A F69B
I08.9	05	F69A F69B
I09.0	05	F75A F75B F75C F75D
I09.1	05	F69A F69B
I09.2	05	F75A F75B F75C F75D
I09.8	05	F75A F75B F75C F75D
I09.9	05	F75A F75B F75C F75D
I10.00	05	F67A F67B
I10.01	05	F67A F67B
I10.10	05	F67A F67B
I10.11	05	F67A F67B
I10.90	05	F67A F67B
I10.91	05	F67A F67B
I11.00	05	F62A F62B F62C F62D
I11.01	05	F62A F62B F62C F62D
I11.90	05	F67A F67B
I11.91	05	F67A F67B
I12.00	11	L60A L60B L60C L60D L60E L71Z
	15	MSPNG SPNG
I12.01	11	L60A L60B L60C L60D L60E L71Z
	15	MSPNG SPNG
I12.90	11	L68A L68B L68C
	15	MSPNG SPNG
I12.91	11	L68A L68B L68C
	15	MSPNG SPNG
I13.00	05	F62A F62B F62C F62D
I13.01	05	F62A F62B F62C F62D
I13.10	11	L60A L60B L60C L60D L60E L71Z
I13.11	11	L60A L60B L60C L60D L60E L71Z
I13.20	05	F62A F62B F62C F62D
I13.21	05	F62A F62B F62C F62D
I13.90	05	F67A F67B
I13.91	05	F67A F67B
I15.00	05	F67A F67B
	15	MSPNG SPNG
I15.01	05	F67A F67B
	15	MSPNG SPNG
I15.10	05	F67A F67B
	15	MSPNG SPNG
I15.11	05	F67A F67B
	15	MSPNG SPNG
I15.20	05	F67A F67B
I15.21	05	F67A F67B
I15.80	05	F67A F67B
I15.81	05	F67A F67B
I15.90	05	F67A F67B
I15.91	05	F67A F67B
I20.0	05	F66A F66B

ICD	MDC	DRG
I20.1	05	F66A F66B
I20.8	05	F66A F66B
I20.9	05	F66A F66B
I21.0	Prä	A11C
	05	F04Z F06A F06B F24A F24B F24C F41A F41B F60A F60B
I21.1	Prä	A11C
	05	F04Z F06A F06B F24A F24B F24C F41A F41B F60A F60B
I21.2	Prä	A11C
	05	F04Z F06A F06B F24A F24B F24C F41A F41B F60A F60B
I21.3	Prä	A11C
	05	F04Z F06A F06B F24A F24B F24C F41A F41B F60A F60B
I21.4	Prä	A11C
	05	F04Z F06A F06B F24A F24B F24C F41A F41B F60A F60B
I21.9	05	F04Z F06A F06B F24A F24B F24C F41A F41B F60A F60B
I22.0	05	F04Z F06A F06B F24A F24B F24C F41A F41B F60A F60B
I22.1	05	F04Z F06A F06B F24A F24B F24C F41A F41B F60A F60B
I22.8	05	F04Z F06A F06B F24A F24B F24C F41A F41B F60A F60B
I22.9	05	F04Z F06A F06B F24A F24B F24C F41A F41B F60A F60B
I23.0	Prä	A11C
	05	F24A F24B F24C F75A F75B F75C F75D
I23.1	Prä	A11C
	05	F24A F24B F24C F75A F75B F75C F75D
I23.2	Prä	A11C
	05	F24A F24B F24C F75A F75B F75C F75D
I23.3	Prä	A11C
	05	F24A F24B F24C F75A F75B F75C F75D
I23.4	Prä	A11C
	05	F24A F24B F24C F69A F69B
I23.5	Prä	A11C
	05	F24A F24B F24C F69A F69B
I23.6	Prä	A11C
	05	F24A F24B F24C F75A F75B F75C F75D
I23.8	05	F75A F75B F75C F75D
I24.0	05	F66A F66B
I24.1	05	F75A F75B F75C F75D
I24.8	05	F66A F66B
I24.9	05	F66A F66B
I25.0	05	F66A F66B
I25.3	05	F75A F75B F75C F75D
I25.4	05	F75A F75B F75C F75D
I25.5	Prä	A11C
	05	F66A F66B
I25.6	05	F66A F66B
I25.8	05	F66A F66B
I25.9	05	F66A F66B
I25.10	05	F66A F66B
I25.11	05	F66A F66B
I25.12	05	F66A F66B
I25.13	05	F66A F66B
I25.14	05	F66A F66B
I25.15	05	F66A F66B
I25.16	05	F66A F66B
I25.19	05	F66A F66B
I25.20	Prä	961Z
I25.21	Prä	961Z
I25.22	Prä	961Z
I25.29	Prä	961Z
I26.0	04	E64A E64B E64C E64D E86B
	15	MSPNG SPNG
	Prä	A11C
I26.9	04	E64A E64B E64C E64D E86B
	15	MSPNG SPNG
	Prä	A11C
I27.0	05	F49A F49C F75A F75B F75C F75D
	15	MSPNG SPNG
	Prä	A11C
I27.1	05	F75A F75B F75C F75D
	15	MSPNG SPNG
I27.8	05	F75A F75B F75C F75D
I27.9	05	F75A F75B F75C F75D
I27.20	05	F19Z F75A F75B F75C F75D
	15	MSPNG SPNG
I27.28	05	F75A F75B F75C F75D
I28.0	05	F75A F75B F75C F75D
I28.1	05	F75A F75B F75C F75D
I28.8	05	F75A F75B F75C F75D
I28.9	05	F75A F75B F75C F75D
I30.0	05	F75A F75B F75C F75D
	15	MSPNG SPNG
I30.1	05	F75A F75B F75C F75D
	15	MSPNG SPNG
I30.8	05	F75A F75B F75C F75D
	15	MSPNG SPNG
I30.9	05	F75A F75B F75C F75D
	15	MSPNG SPNG
I31.0	05	F75A F75B F75C F75D
I31.1	05	F49A F49C F75A F75B F75C F75D
I31.2	05	F75A F75B F75C F75D
	15	MSPNG SPNG
I31.3	05	F75A F75B F75C F75D
	15	MSPNG SPNG
	Prä	A11C
I31.9	05	F75A F75B F75C F75D
	15	MSPNG SPNG
I31.80	05	F75A F75B F75C F75D
	15	MSPNG SPNG
I31.88	05	F75A F75B F75C F75D
	15	MSPNG SPNG
I32.0	15	MSPNG SPNG
	Prä	961Z
I32.1	15	MSPNG SPNG
	Prä	961Z
I32.8	15	MSPNG SPNG
	Prä	961Z
I33.0	05	F61A F61B
	15	MSPNG SPNG
	Prä	A11C
I33.9	05	F61A F61B
	15	MSPNG SPNG
I34.0	05	F69A F69B
I34.1	05	F69A F69B
I34.2	05	F69A F69B
I34.9	05	F69A F69B
I34.80	05	F69A F69B
I34.88	05	F69A F69B
I35.0	05	F69A F69B
	15	P65B P66B P66C P67A P67B P67C
I35.1	05	F69A F69B
I35.2	05	F69A F69B
I35.8	05	F69A F69B
I35.9	05	F69A F69B
I36.0	05	F69A F69B
I36.1	05	F69A F69B
I36.2	05	F69A F69B
I36.8	05	F69A F69B
I36.9	05	F69A F69B
I37.0	05	F69A F69B
	15	MSPNG SPNG
I37.1	05	F69A F69B
I37.2	05	F69A F69B
I37.8	05	F69A F69B
I37.9	05	F69A F69B
I38	05	F61A F61B
I39.0	15	MSPNG SPNG
	Prä	961Z
I39.1	15	MSPNG SPNG
	Prä	961Z
I39.2	15	MSPNG SPNG
	Prä	961Z
I39.3	15	MSPNG SPNG

DIAG

ICD	MDC	DRG
	Prä	961Z
I39.4	15	MSPNG SPNG
	Prä	961Z
I39.8	15	MSPNG SPNG
	Prä	961Z
I40.0	05	F75A F75B F75C
		F75D
	15	MSPNG SPNG
	Prä	A11C
I40.1	05	F75A F75B F75C
		F75D
I40.8	05	F75A F75B F75C
		F75D
I40.9	05	F75A F75B F75C
		F75D
	15	MSPNG SPNG
I41.0	15	MSPNG SPNG
	Prä	961Z
I41.1	15	MSPNG SPNG
	Prä	961Z
I41.2	15	MSPNG SPNG
	Prä	961Z
I41.8	15	MSPNG SPNG
	Prä	961Z
I42.0	Prä	A11C
	05	F49A F49C F75A
		F75B F75C F75D
I42.1	Prä	A11C
	05	F24A F24B F24C
		F49A F49C F75A
		F75B F75C F75D
	15	P65B P66B P66C
		P67A P67B P67C
I42.2	05	F49A F49C F75A
		F75B F75C F75D
I42.3	05	F49A F49C F75A
		F75B F75C F75D
I42.4	05	F49A F49C F75A
		F75B F75C F75D
I42.5	05	F49A F49C F75A
		F75B F75C F75D
I42.6	05	F49A F49C F75A
		F75B F75C F75D
I42.7	05	F49A F49C F75A
		F75B F75C F75D
I42.9	05	F49A F49C F75A
		F75B F75C F75D
I42.80	05	F49A F49C F75A
		F75B F75C F75D
I42.88	05	F49A F49C F75A
		F75B F75C F75D
I43.0	Prä	961Z
I43.1	15	MSPNG SPNG
	Prä	961Z
I43.2	15	MSPNG SPNG
	Prä	961Z
I43.8	Prä	961Z
I44.0	05	F66A F66B
	15	MSPNG SPNG
I44.1	05	F70A F70B
	15	MSPNG SPNG
I44.2	05	F70A F70B
	15	MSPNG SPNG
	Prä	A11C
I44.3	05	F66A F66B
	15	MSPNG SPNG
I44.4	05	F66A F66B
	15	MSPNG SPNG
I44.5	05	F66A F66B
	15	MSPNG SPNG
I44.6	05	F66A F66B
	15	MSPNG SPNG
I44.7	05	F66A F66B
	15	MSPNG SPNG
I45.0	05	F66A F66B
	15	MSPNG SPNG
I45.1	05	F66A F66B
	15	MSPNG SPNG
I45.2	05	F66A F66B
	15	MSPNG SPNG
I45.3	05	F70A F70B
	15	MSPNG SPNG
I45.4	05	F66A F66B
	15	MSPNG SPNG
I45.5	05	F66A F66B
	15	MSPNG SPNG
I45.6	05	F66A F66B
	15	MSPNG SPNG
I45.8	05	F66A F66B
	15	MSPNG SPNG
I45.9	05	F66A F66B
	15	MSPNG SPNG
I46.0	05	F24A F24B F24C
		F49A F49C F62A
		F70A F70B
	15	MSPNG SPNG
I46.1	05	F70A F70B
	15	MSPNG SPNG
I46.9	05	F70A F70B
	15	MSPNG SPNG
I47.0	05	F66A F66B
I47.1	05	F66A F66B
	15	MSPNG SPNG
I47.2	05	F24A F24B F24C
		F49A F49C F62A
		F70A F70B
	15	MSPNG SPNG
I47.9	05	F70A F70B
	15	MSPNG SPNG
I48.0	05	F66A F66B
	15	MSPNG SPNG
I48.1	05	F66A F66B
	15	MSPNG SPNG
I48.2	05	F66A F66B
	15	MSPNG SPNG
I48.3	05	F66A F66B
	15	MSPNG SPNG
I48.4	05	F66A F66B
	15	MSPNG SPNG
I48.9	05	F66A F66B
	15	MSPNG SPNG
I49.0	05	F24A F24B F24C
		F49A F49C F62A
		F70A F70B
	15	MSPNG SPNG
I49.1	05	F66A F66B
	15	P65B P66B P66C
		P67A P67B P67C
I49.2	05	F66A F66B
I49.3	05	F66A F66B
	15	P65B P66B P66C
		P67A P67B P67C
I49.4	05	F66A F66B
I49.5	05	F66A F66B
I49.8	05	F66A F66B
	15	P65B P66B P66C
		P67A P67B P67C
I49.9	05	F66A F66B
I50.00	05	F24A F24B F24C
		F49A F49C F62A
		F62B F62C F62D
	15	MSPNG SPNG
I50.01	05	F03A F03B F03C
		F04Z F06A F06B
		F21B F24A F24B
		F24C F49A F49C
		F62A F62B F62C
		F62D F66A
	15	MSPNG SPNG
I50.02	Prä	961Z
I50.03	Prä	961Z
I50.04	Prä	961Z
I50.05	Prä	961Z
I50.9	05	F62A F62B F62C
		F62D
	15	MSPNG SPNG
I50.11	05	F49A F49C F62A
		F62B F62C F62D
	15	MSPNG SPNG
I50.12	05	F24A F24B F24C
		F49A F49C F62A
		F62B F62C F62D
	15	MSPNG SPNG
I50.13	05	F03A F03B F03C
		F04Z F06A F06B
		F21B F24A F24B
		F24C F49A F49C
		F62A F62B F62C
		F62D
	15	MSPNG SPNG
I50.14	05	F03A F03B F03C
		F04Z F06A F06B
		F21B F24A F24B
		F24C F49A F49C
		F62A F62B F62C
		F62D F66A
	15	MSPNG SPNG
I50.19	05	F62A F62B F62C
		F62D
	15	MSPNG SPNG
I51.0	05	F75A F75B F75C
		F75D
I51.1	05	F69A F69B
	15	MSPNG SPNG
I51.2	05	F69A F69B
	15	MSPNG SPNG
I51.3	05	F75A F75B F75C
		F75D
I51.4	05	F61A F75A F75B
		F75C F75D
	15	MSPNG SPNG
I51.5	05	F75A F75B F75C
		F75D
	15	MSPNG SPNG
I51.6	05	F66A F66B
	15	MSPNG SPNG
I51.7	05	F66A F66B
I51.8	05	F66A F66B
I51.9	05	F66A F66B
I52.0	Prä	961Z
I52.1	Prä	961Z
I52.8	Prä	961Z
I60.0	01	B03A B03B B03C
		B20A B20B B70A
		B70B B70C B70D
		B70F B70G B70H
		B70I
	15	MSPNG SPNG
	Prä	A11C
I60.1	01	B03A B03B B03C

ICD	MDC	DRG
		B20A B20B B70A B70B B70C B70D B70F B70G B70H B70I
	15	MSPNG SPNG
	Prä	A11C
I60.2	01	B03A B03B B03C B20A B20B B70A B70B B70C B70D B70F B70G B70H B70I
	15	MSPNG SPNG
	Prä	A11C
I60.3	01	B03A B03B B03C B20A B20B B70A B70B B70C B70D B70F B70G B70H B70I
	15	MSPNG SPNG
	Prä	A11C
I60.4	01	B03A B03B B03C B20A B20B B70A B70B B70C B70D B70F B70G B70H B70I
	15	MSPNG SPNG
	Prä	A11C
I60.5	01	B03A B03B B03C B20A B20B B70A B70B B70C B70D B70F B70G B70H B70I
	15	MSPNG SPNG
	Prä	A11C
I60.6	01	B03A B03B B03C B20A B20B B70A B70B B70C B70D B70F B70G B70H B70I
	15	MSPNG SPNG
	Prä	A11C
I60.7	01	B03A B03B B03C B20A B20B B70A B70B B70C B70D B70F B70G B70H B70I
	15	MSPNG SPNG
	Prä	A11C
I60.8	01	B03A B03B B03C B20A B20B B70A B70B B70C B70D B70F B70G B70H B70I
	15	MSPNG SPNG
	Prä	A11C
I60.9	01	B70A B70B B70C B70D B70E B70F B70G B70H B70I B81A B81B B81C
	15	MSPNG SPNG
	Prä	A11C
I61.0	01	B03A B03B B03C B20A B20B B70A B70B B70C B70D B70F B70G B70H B70I
	05	F61A
	15	MSPNG SPNG
	Prä	A11C
I61.1	01	B03A B03B B03C B20A B20B B70A B70B B70C B70D B70F B70G B70H B70I
	05	F61A
	15	MSPNG SPNG
	Prä	A11C
I61.2	01	B03A B03B B03C B70A B70B B70C B70D B70E B70F B70G B70H B70I B81A B81B B81C
	05	F61A
	15	MSPNG SPNG
	Prä	A11C
I61.3	01	B03A B03B B03C B20A B20B B70A B70B B70C B70D B70F B70G B70H B70I
	05	F61A
	15	MSPNG SPNG
	Prä	A11C
I61.4	01	B03A B03B B03C B20A B20B B70A B70B B70C B70D B70F B70G B70H B70I
	05	F61A
	15	MSPNG SPNG
	Prä	A11C
I61.5	01	B03A B03B B03C B20A B20B B70A B70B B70C B70D B70F B70G B70H B70I
	05	F61A
	15	MSPNG SPNG
	Prä	A11C
I61.6	01	B03A B03B B03C B20A B20B B70A B70B B70C B70D B70F B70G B70H B70I
	05	F61A
	15	MSPNG SPNG
	Prä	A11C
I61.8	01	B03A B03B B03C B20A B20B B70A B70B B70C B70D B70F B70G B70H B70I
	15	MSPNG SPNG
I61.9	01	B70A B70B B70C B70D B70E B70F B70G B70H B70I B81A B81B B81C
	15	MSPNG SPNG
I62.00	01	B03A B03B B03C B70A B70B B70C B70D B70E B70F B70G B70H B70I
	15	MSPNG SPNG
I62.01	01	B03A B03B B03C B70A B70B B70C B70D B70E B70F B70G B70H B70I
	15	MSPNG SPNG
I62.1	01	B03A B03B B03C B70A B70B B70C B70D B70E B70F B70G B70H B70I
	15	MSPNG SPNG
I62.02	01	B03A B03B B03C B70A B70B B70C B70D B70E B70F B70G B70H B70I
	15	MSPNG SPNG
I62.09	01	B70A B70B B70C B70D B70E B70F B70G B70H B70I B81A B81B B81C
	15	MSPNG SPNG
I62.9	01	B70A B70B B70C B70D B70E B70F B70G B70H B70I B81A B81B B81C
	15	MSPNG SPNG
I63.0	01	B03A B03B B03C B04B B70A B70B B70C B70D B70E B70F B70G B70H B70I
	15	MSPNG SPNG
I63.1	01	B03A B03B B03C B04B B70A B70B B70C B70D B70E B70F B70G B70H B70I
	15	MSPNG SPNG
I63.2	01	B03A B03B B03C B04B B70A B70B B70C B70D B70E B70F B70G B70H B70I
	15	MSPNG SPNG
I63.3	01	B03A B03B B03C B04B B70A B70B B70C B70D B70E B70F B70G B70H B70I
	15	MSPNG SPNG
I63.4	01	B03A B03B B03C B04B B70A B70B B70C B70D B70E B70F B70G B70H B70I
	15	MSPNG SPNG
I63.5	01	B03A B03B B03C B04B B70A B70B B70C B70D B70E B70F B70G B70H B70I B81A B81B B81C
	15	MSPNG SPNG
I63.6	01	B03A B03B B03C B04B B70A B70B B70C B70D B70E B70F B70G B70H B70I
	15	MSPNG SPNG
I63.8	01	B03A B03B B03C B04B B70A B70B B70C B70D B70E B70F B70G B70H B70I
	15	MSPNG SPNG
I63.9	01	B70A B70B B70C B70D B70E B70F B70G B70H B70I

DIAG

ICD	MDC	DRG
		B81A B81B B81C
	15	MSPNG SPNG
I64	01	B03A B03B B03C
		B70A B70B B70C
		B70D B70E B70F
		B70G B70H B70I
I65.0	01	B03A B03B B03C
		B69A B69B B69C
	15	MSPNG SPNG
I65.1	01	B03A B03B B03C
		B69A B69B B69C
		B70A B70B B70D
	15	MSPNG SPNG
I65.2	01	B03A B03B B03C
		B69A B69B B69C
	15	MSPNG SPNG
I65.3	01	B03A B03B B03C
		B69A B69B B69C
	15	MSPNG SPNG
I65.8	01	B03A B03B B03C
		B69A B69B B69C
	15	MSPNG SPNG
I65.9	01	B03A B03B B03C
		B69A B69B B69C
	15	MSPNG SPNG
I66.0	01	B03A B03B B03C
		B70A B70B B70C
		B70D B70E B70F
		B70G B70H B70I
	05	F61A
	15	MSPNG SPNG
I66.1	01	B03A B03B B03C
		B70A B70B B70C
		B70D B70E B70F
		B70G B70H B70I
	05	F61A
	15	MSPNG SPNG
I66.2	01	B03A B03B B03C
		B70A B70B B70C
		B70D B70E B70F
		B70G B70H B70I
	05	F61A
	15	MSPNG SPNG
I66.3	01	B03A B03B B03C
		B69A B69B B69C
	05	F61A
	15	MSPNG SPNG
I66.4	01	B03A B03B B03C
		B70A B70B B70C
		B70D B70E B70F
		B70G B70H B70I
	05	F61A
	15	MSPNG SPNG
I66.8	01	B03A B03B B03C
		B70A B70B B70C
		B70D B70E B70F
		B70G B70H B70I
	05	F61A
	15	MSPNG SPNG
I66.9	01	B03A B03B B03C
		B70A B70B B70C
		B70D B70E B70F
		B70G B70H B70I
	05	F61A
	15	MSPNG SPNG
I67.0	Prä	A11C
	01	B70A B70B B70C
		B70D B70E B70F
		B70G B70H B70I
I67.2	Prä	A11C
	01	B03A B03B B03C
		B63A B63B
I67.3	Prä	A11C
	01	B85A B85B
I67.4	Prä	A11C
	01	B63A B63B
I67.5	Prä	A11C
	01	B03A B03B B03C
		B81A B81B
I67.6	01	B03A B03B B03C
		B81A B81B
	15	MSPNG SPNG
	Prä	A11C
I67.7	Prä	A11C
	01	B03A B03B B03C
		B81A B81B
I67.9	01	B81A B81B B81C
I67.10	01	B03A B03B B03C
		B70A B70B B70C
		B70D B70E B70F
		B70G B70H B70I
	15	MSPNG SPNG
	Prä	A11C
I67.11	01	B03A B03B B03C
		B70A B70B B70C
		B70D B70E B70F
		B70G B70H B70I
	15	MSPNG SPNG
	Prä	A11C
I67.80	Prä	A11C
	01	B03A B03B B03C
		B63A B63B
I67.88	01	B03A B03B B03C
		B63A B63B
I68.0	Prä	961Z A11C
I68.1	Prä	961Z A11C
I68.2	Prä	961Z A11C
I68.8	Prä	961Z
I69.0	Prä	961Z
I69.1	Prä	961Z
I69.2	Prä	961Z
I69.3	Prä	961Z
I69.4	Prä	961Z
I69.8	Prä	961Z
I70.0	05	F75A F75B F75C
		F75D
I70.1	05	F75A F75B F75C
		F75D
I70.8	05	F75A F75B F75C
		F75D
I70.9	05	F75A F75B F75C
		F75D
I70.20	05	F75A F75B F75C
		F75D
I70.21	05	F75A F75B F75C
		F75D
I70.22	05	F75A F75B F75C
		F75D
I70.23	05	F75A F75B F75C
		F75D
I70.24	05	F59F F75A F75B
		F75C F75D
	09	J11A
I70.25	05	F59F F75A F75B
		F75C F75D
	09	J11A
I70.26	05	F75A F75B F75C
		F75D
I70.29	05	F75A F75B F75C
		F75D
I71.00	05	F75A F75B F75C
		F75D
	15	MSPNG SPNG
	Prä	A11C
I71.01	05	F75A F75B F75C
		F75D
	15	MSPNG SPNG
	Prä	A11C
I71.1	05	F51A F51B F75A
		F75B F75C F75D
	15	MSPNG SPNG
	Prä	A11C
I71.02	05	F75A F75B F75C
		F75D
	15	MSPNG SPNG
	Prä	A11C
I71.2	05	F03C F03D F75A
		F75B F75C F75D
	15	MSPNG SPNG
	Prä	A11C
I71.03	05	F75A F75B F75C
		F75D
	15	MSPNG SPNG
	Prä	A11C
I71.3	05	F51A F51B F75A
		F75B F75C F75D
	15	MSPNG SPNG
	Prä	A11C
I71.04	05	F51A F51B F75A
		F75B F75C F75D
	15	MSPNG SPNG
	Prä	A11C
I71.4	05	F75A F75B F75C
		F75D
	15	MSPNG SPNG
	Prä	A11C
I71.05	05	F51A F51B F75A
		F75B F75C F75D
	15	MSPNG SPNG
	Prä	A11C
I71.5	05	F51A F51B F75A
		F75B F75C F75D
	15	MSPNG SPNG
	Prä	A11C
I71.06	05	F51A F51B F75A
		F75B F75C F75D
	15	MSPNG SPNG
	Prä	A11C
I71.6	05	F75A F75B F75C
		F75D
	15	MSPNG SPNG
	Prä	A11C
I71.07	05	F51A F51B F75A
		F75B F75C F75D
	15	MSPNG SPNG
	Prä	A11C
I71.8	05	F51A F51B F75A
		F75B F75C F75D
	15	MSPNG SPNG
I71.9	05	F75A F75B F75C
		F75D
	15	MSPNG SPNG
I72.0	01	B70A B70B B70C
		B70D B70E B70F
		B70G B70H B70I
I72.1	05	F75A F75B F75C
		F75D
I72.2	11	L68A L68B L68C
I72.3	05	F75A F75B F75C
		F75D

ICD	MDC	DRG
I72.4	05	F75A F75B F75C F75D
I72.5	01	B70A B70B B70C B70D B70E B70F B70G B70H B70I
I72.6	01	B70A B70B B70C B70D B70E B70F B70G B70H B70I
I72.8	05	F75A F75B F75C F75D
I72.9	05	F75A F75B F75C F75D
I73.0	08	I66A I66B I66C
I73.1	05	F75A F75B F75C F75D
I73.8	05	F75A F75B F75C F75D
	15	MSPNG SPNG
I73.9	05	F75A F75B F75C F75D
	15	MSPNG SPNG
I74.0	05	F61A F75A F75B F75C F75D
	15	MSPNG SPNG
I74.1	05	F61A F75A F75B F75C F75D
	15	MSPNG SPNG
I74.2	05	F61A F75A F75B F75C F75D
	15	MSPNG SPNG
I74.3	05	F61A F75A F75B F75C F75D
	15	MSPNG SPNG
I74.4	05	F61A F75A F75B F75C F75D
	15	MSPNG SPNG
I74.5	05	F61A F75A F75B F75C F75D
	15	MSPNG SPNG
I74.8	05	F75A F75B F75C F75D
	15	MSPNG SPNG
I74.9	05	F75A F75B F75C F75D
	15	MSPNG SPNG
I77.0	05	F75A F75B F75C F75D
I77.1	05	F75A F75B F75C F75D
I77.2	05	F75A F75B F75C F75D
	15	MSPNG SPNG
	Prä	A11C
I77.3	05	F75A F75B F75C F75D
I77.4	06	G67A G67B G67C G67D
I77.5	05	F75A F75B F75C F75D
	15	MSPNG SPNG
I77.6	08	I66A I66B I66C
I77.9	05	F75A F75B F75C F75D
I77.80	05	F75A F75B F75C F75D
I77.88	05	F75A F75B F75C F75D
I78.0	05	F75A F75B F75C F75D
I78.1	09	J67Z
I78.8	05	F75A F75B F75C F75D
I78.9	05	F75A F75B F75C F75D
I79.0	15	MSPNG SPNG
	Prä	961Z
I79.1	Prä	961Z
I79.2	15	MSPNG SPNG
	Prä	961Z
I79.8	Prä	961Z
I80.0	05	F59D F63A F63B
I80.1	05	F59D F63A F63B
	15	MSPNG SPNG
I80.3	05	F59D F63A F63B
I80.9	05	F59D F63A F63B
I80.20	05	F59D F63A F63B
	15	MSPNG SPNG
I80.28	05	F59D F63A F63B
	15	MSPNG SPNG
I80.80	05	F59D F63A F63B
I80.81	05	F59D F63A F63B
I80.88	05	F59D F63A F63B
I81	07	H63A H63B H63C H63D
	15	MSPNG SPNG
I82.0	07	H63A H63B H63C H63D
	15	MSPNG SPNG
I82.1	05	F59D F75A F75B F75C F75D
I82.2	05	F59D F63A F63B
	15	MSPNG SPNG
I82.3	11	L68A L68B L68C
	15	MSPNG SPNG
I82.9	05	F59D F63A F63B
I82.80	05	F59D F63A F63B
I82.81	05	F59D F63A F63B
I82.88	05	F59D F63A F63B
I83.0	05	F64Z
	09	J11A
I83.1	05	F75A F75B F75C F75D
I83.2	05	F64Z
	09	J11A
I83.9	05	F75A F75B F75C F75D
I85.0	06	G46A G46B G67A G67B G67C G67D
	07	H41A H41B H41C H41D
	15	MSPNG SPNG
	Prä	A11C
I85.9	06	G71A G71B
I86.0	05	F75A F75B F75C F75D
I86.1	12	M64Z
I86.2	12	M64Z
	13	N62A N62B
I86.3	13	N62A N62B
I86.4	05	F75A F75B F75C F75D
I86.80	06	G71A G71B
I86.81	06	G71A G71B
I86.82	06	G71A G71B
I86.88	05	F75A F75B F75C F75D
I87.00	05	F59E F75A F75B F75C F75D
I87.01	05	F59E F63A F63B
I87.1	05	F59E F75A F75B F75C F75D
I87.8	05	F59E F66A F66B
I87.9	05	F66A F66B
I87.20	05	F59E F75A F75B F75C F75D
I87.21	05	F59E F75A F75B F75C F75D
I88.0	06	G72A G72B
I88.1	16	Q60A Q60B Q60C
I88.8	16	Q60A Q60B Q60C
I88.9	16	Q60A Q60B Q60C
I89.00	09	J67Z
I89.01	09	J67Z
I89.1	09	J64A J64B J64C J64D
	15	MSPNG SPNG
I89.02	09	J67Z
I89.03	09	J67Z
I89.04	09	J67Z
I89.05	09	J67Z
I89.08	09	J67Z
I89.8	15	MSPNG SPNG
	16	Q60A Q60B Q60C
I89.09	09	J67Z
I89.9	16	Q60A Q60B Q60C
I95.0	05	F73A F73B
I95.1	05	F73A F73B
I95.2	05	F73A F73B
I95.8	05	F73A F73B
I95.9	05	F73A F73B
I97.0	05	F75A F75B F75C F75D
	15	MSPNG SPNG
I97.1	05	F75A F75B F75C F75D
	15	MSPNG SPNG
I97.9	05	F75A F75B F75C F75D
I97.20	09	J67Z
I97.21	09	J67Z
I97.22	09	J67Z
I97.29	09	J67Z
I97.80	09	J67Z
I97.81	09	J67Z
I97.82	09	J67Z
I97.83	09	J67Z
I97.84	09	J67Z
I97.85	09	J67Z
I97.86	09	J67Z
I97.87	09	J67Z
I97.88	09	J67Z
I97.89	05	F75A F75B F75C F75D
I98.0	15	MSPNG SPNG
	Prä	961Z
I98.1	15	MSPNG SPNG
	Prä	961Z
I98.2	Prä	961Z
I98.3	Prä	961Z
	07	H41A H41B H41C H41D
I98.8	Prä	961Z
I99	05	F66A F66B
J00	03	D62A D62B D62C
J01.0	03	D62A D62B D62C
J01.1	03	D62A D62B D62C
J01.2	03	D62A D62B D62C
J01.3	03	D62A D62B D62C
J01.4	03	D62A D62B D62C
J01.8	03	D62A D62B D62C

DIAG

ICD	MDC	DRG
J01.9	03	D62A D62B D62C
J02.0	03	D62A D62B D62C
J02.8	03	D62A D62B D62C
	15	P65B P66B P66C
		P67A P67B P67C
J02.9	03	D62A D62B D62C
	15	P65B P66B P66C
		P67A P67B P67C
J03.0	03	D62A D62B D62C
J03.8	03	D62A D62B D62C
J03.9	03	D62A D62B D62C
J04.0	03	D62A D62B D62C
	15	P65B P66B P66C
		P67A P67B P67C
J04.1	04	E70A E70B E70C
J04.2	03	D64Z
J05.0	03	D64Z
J05.1	Prä	A11C
	03	D64Z
J06.0	03	D62A D62B D62C
	15	P65B P66B P66C
		P67A P67B P67C
J06.8	03	D62A D62B D62C
	15	P65B P66B P66C
		P67A P67B P67C
J06.9	03	D62A D62B D62C
J09	04	E77A E77B E77C
	15	MSPNG SPNG
J10.0	04	E77A E77B E77C
	15	MSPNG SPNG
J10.1	03	D62A
	15	MSPNG SPNG
J10.8	15	MSPNG SPNG
	18B	T63A T63B
J11.0	04	E77A E77B E77C
	15	MSPNG SPNG
J11.1	03	D62A D62B D62C
	15	MSPNG SPNG
J11.8	15	MSPNG SPNG
	18B	T63A T63B
J12.0	04	E77A E77B E77C
	15	MSPNG SPNG
	17	R50A R60A R60B
		R60C R60D R62A
		R62B R63A R63B
		R63C R63D
	Prä	A93A A97A A97B
		A97C A97D
J12.1	04	E70A E70B E77A
		E77B
	15	MSPNG SPNG
	17	R50A R60A R60B
		R60C R60D R62A
		R62B R63A R63B
		R63C R63D
	Prä	A93A A97A A97B
		A97C A97D
J12.2	04	E77A E77B E77C
	15	MSPNG SPNG
	17	R50A R60A R60B
		R60C R60D R62A
		R62B R63A R63B
		R63C R63D
	Prä	A93A A97A A97B
		A97C A97D
J12.3	04	E77A E77B E77C
	15	MSPNG SPNG
	17	R50A R60A R60B
		R60C R60D R62A
		R62B R63A R63B
		R63C R63D
	Prä	A93A A97A A97B
		A97C A97D
J12.8	04	E77A E77B E77C
	15	MSPNG SPNG
	17	R50A R60A R60B
		R60C R60D R62A
		R62B R63A R63B
		R63C R63D
	Prä	A93A A97A A97B
		A97C A97D
J12.9	04	E77A E77B E77C
	15	MSPNG SPNG
	17	R50A R60A R60B
		R60C R60D R62A
		R62B R63A R63B
		R63C R63D
	Prä	A93A A97A A97B
		A97C A97D
J13	04	E77A E77B E77C
	15	MSPNG SPNG
J14	04	E77A E77B E77C
	15	MSPNG SPNG
J15.0	04	E77A E77B E77C
	15	MSPNG SPNG
	17	R50A R60A R60B
		R60C R60D R62A
		R62B R63A R63B
		R63C R63D
	Prä	A93A A97A A97B
		A97C A97D
J15.1	04	E77A E77B E77C
	15	MSPNG SPNG
	17	R50A R60A R60B
		R60C R60D R62A
		R62B R63A R63B
		R63C R63D
	Prä	A93A A97A A97B
		A97C A97D
J15.2	04	E77A E77B E77C
	15	MSPNG SPNG
	17	R50A R60A R60B
		R60C R60D R62A
		R62B R63A R63B
		R63C R63D
	Prä	A93A A97A A97B
		A97C A97D
J15.3	04	E77A E77B E77C
	15	MSPNG SPNG
	17	R50A R60A R60B
		R60C R60D R62A
		R62B R63A R63B
		R63C R63D
	Prä	A93A A97A A97B
		A97C A97D
J15.4	04	E77A E77B E77C
	15	MSPNG SPNG
	17	R50A R60A R60B
		R60C R60D R62A
		R62B R63A R63B
		R63C R63D
	Prä	A93A A97A A97B
		A97C A97D
J15.5	04	E77A E77B E77C
	15	MSPNG SPNG
	17	R50A R60A R60B
		R60C R60D R62A
		R62B R63A R63B
		R63C R63D
	Prä	A93A A97A A97B
		A97C A97D
J15.6	04	E77A E77B E77C
	15	MSPNG SPNG
	17	R50A R60A R60B
		R60C R60D R62A
		R62B R63A R63B
		R63C R63D
	Prä	A93A A97A A97B
		A97C A97D
J15.7	04	E77A E77B E77C
	15	MSPNG SPNG
	17	R50A R60A R60B
		R60C R60D R62A
		R62B R63A R63B
		R63C R63D
	Prä	A93A A97A A97B
		A97C A97D
J15.8	04	E77A E77B E77C
	15	MSPNG SPNG
	17	R50A R60A R60B
		R60C R60D R62A
		R62B R63A R63B
		R63C R63D
	Prä	A93A A97A A97B
		A97C A97D
J15.9	04	E77A E77B E77C
	15	MSPNG SPNG
J16.0	04	E77A E77B E77C
	15	MSPNG SPNG
	17	R50A R60A R60B
		R60C R60D R62A
		R62B R63A R63B
		R63C R63D
	Prä	A93A A97A A97B
		A97C A97D
J16.8	04	E77A E77B E77C
	15	MSPNG SPNG
	17	R50A R60A R60B
		R60C R60D R62A
		R62B R63A R63B
		R63C R63D
	Prä	A93A A97A A97B
		A97C A97D
J17.0	15	MSPNG SPNG
	17	R50A R60A R60B
		R60C R60D R62A
		R62B R63A R63B
		R63C R63D
	Prä	961Z A93A A97A
		A97B A97C A97D
J17.1	15	MSPNG SPNG
	17	R50A R60A R60B
		R60C R60D R62A
		R62B R63A R63B
		R63C R63D
	Prä	961Z A93A A97A
		A97B A97C A97D
J17.2	15	MSPNG SPNG
	17	R50A R60A R60B
		R60C R60D R62A
		R62B R63A R63B
		R63C R63D
	Prä	961Z A93A A97A
		A97B A97C A97D
J17.3	15	MSPNG SPNG
	17	R50A R60A R60B
		R60C R60D R62A
		R62B R63A R63B
		R63C R63D
	Prä	961Z A93A A97A

ICD	MDC	DRG
		A97B A97C A97D
J17.8	15	MSPNG SPNG
	17	R50A R60A R60B
		R60C R60D R62A
		R62B R63A R63B
		R63C R63D
	Prä	961Z A93A A97A
		A97B A97C A97D
J18.0	04	E77A E77B E77C
	15	MSPNG SPNG
	17	R50A R60A R60B
		R60C R60D R62A
		R62B R63A R63B
		R63C R63D
	Prä	A93A A97A A97B
		A97C A97D
J18.1	04	E77A E77B E77C
	15	MSPNG SPNG
	17	R50A R60A R60B
		R60C R60D R62A
		R62B R63A R63B
		R63C R63D
	Prä	A93A A97A A97B
		A97C A97D
J18.2	Prä	A93A A97A A97B
		A97C A97D
	04	E77A E77B E77C
	17	R50A R60A R60B
		R60C R60D R62A
		R62B R63A R63B
		R63C R63D
J18.8	04	E77A E77B E77C
	15	MSPNG SPNG
	17	R50A R60A R60B
		R60C R60D R62A
		R62B R63A R63B
		R63C R63D
	Prä	A93A A97A A97B
		A97C A97D
J18.9	04	E77A E77B E77C
	15	MSPNG SPNG
J20.0	04	E70A E70B E70C
J20.1	04	E70A E70B E70C
J20.2	04	E70A E70B E70C
J20.3	04	E70A E70B E70C
J20.4	04	E70A E70B E70C
J20.5	04	E70A E70B
	15	P65B P66B P66C
		P67A P67B P67C
J20.6	04	E70A E70B E70C
	15	P65B P66B P66C
		P67A P67B P67C
J20.7	04	E70A E70B E70C
J20.8	04	E70A E70B E70C
	15	P65B P66B P66C
		P67A P67B P67C
J20.9	04	E70A E70B E70C
J21.0	04	E70A E70B
	15	MSPNG SPNG
J21.1	04	E70A E70B E70C
	15	MSPNG SPNG
J21.8	04	E70A E70B E70C
	15	MSPNG SPNG
J21.9	04	E70A E70B E70C
	15	MSPNG SPNG
J22	04	E75A E75B E75C
	15	P65B P66B P66C
		P67A P67B P67C
J30.0	03	D62A D62B D62C
J30.1	03	D62A D62B D62C

ICD	MDC	DRG
J30.2	03	D62A D62B D62C
J30.3	03	D62A D62B D62C
J30.4	03	D62A D62B D62C
J31.0	03	D62A D62B D62C
	15	P65B P66B P66C
		P67A P67B P67C
J31.1	03	D62A D62B D62C
J31.2	03	D62A D62B D62C
J32.0	03	D62A D62B D62C
J32.1	03	D62A D62B D62C
J32.2	03	D62A D62B D62C
J32.3	03	D62A D62B D62C
J32.4	03	D62A D62B D62C
J32.8	03	D62A D62B D62C
J32.9	03	D62A D62B D62C
J33.0	03	D66A D66B
J33.1	03	D66A D66B
J33.8	03	D66A D66B
J33.9	03	D66A D66B
J34.0	03	D66A D66B
J34.1	03	D66A D66B
J34.2	03	D65Z
J34.3	03	D66A D66B
	15	MSPNG SPNG
J34.8	03	D66A D66B
J35.0	03	D62A D62B D62C
J35.1	03	D66A D66B
J35.2	03	D66A D66B
J35.3	03	D66A D66B
J35.8	03	D66A D66B
J35.9	03	D66A D66B
J36	03	D62A D62B D62C
J37.0	03	D62A D62B D62C
J37.1	03	D62A D62B D62C
J38.00	03	D66A D66B
	15	MSPNG SPNG
J38.01	03	D66A D66B
J38.1	03	D66A D66B
J38.02	03	D66A D66B
	15	MSPNG SPNG
J38.2	03	D66A D66B
J38.03	03	D66A D66B
	15	MSPNG SPNG
J38.3	03	D66A D66B
J38.4	03	D66A D66B
J38.5	03	D66A D66B
J38.6	03	D66A D66B
	15	MSPNG SPNG
J38.7	03	D66A D66B
	15	MSPNG SPNG
J39.0	03	D62A D62B D62C
	15	MSPNG SPNG
	Prä	A11C
J39.1	03	D66A D66B
J39.2	03	D66A D66B
J39.3	03	D62A D62B D62C
J39.9	03	D62A D62B D62C
J39.80	03	D62A D62B D62C
J39.88	03	D62A D62B D62C
J40	04	E65A E65B E65C
		E65D
	15	P65B P66B P66C
		P67A P67B P67C
J41.0	04	E65A E65B E65C
		E65D
J41.1	04	E60A E60B E65A
		E65B E65C E65D
J41.8	04	E60A E60B E65A
		E65B E65C E65D
J42	04	E60A E60B E65A

ICD	MDC	DRG
		E65B E65C E65D
J43.0	04	E60A E60B E65A
		E65B E65C E65D
J43.1	04	E60A E60B E65A
		E65B E65C E65D
J43.2	04	E60A E60B E65A
		E65B E65C E65D
J43.8	04	E60A E60B E65A
		E65B E65C E65D
J43.9	04	E60A E60B E65A
		E65B E65C E65D
J44.00	04	E60A E60B E65A
		E65B E65C E65D
J44.01	04	E60A E60B E65A
		E65B E65C E65D
J44.02	04	E60A E60B E65A
		E65B E65C E65D
J44.03	04	E60A E60B E65A
		E65B E65C E65D
J44.09	04	E60A E60B E65A
		E65B E65C E65D
J44.10	04	E60A E60B E65A
		E65B E65C E65D
J44.11	04	E60A E60B E65A
		E65B E65C E65D
J44.12	04	E60A E60B E65A
		E65B E65C E65D
J44.13	04	E60A E60B E65A
		E65B E65C E65D
J44.19	04	E60A E60B E65A
		E65B E65C E65D
J44.80	04	E60A E60B E65A
		E65B E65C E65D
J44.81	04	E60A E60B E65A
		E65B E65C E65D
J44.82	04	E60A E60B E65A
		E65B E65C E65D
J44.83	04	E60A E60B E65A
		E65B E65C E65D
J44.89	04	E60A E60B E65A
		E65B E65C E65D
J44.90	04	E60A E60B E65A
		E65B E65C E65D
J44.91	04	E60A E60B E65A
		E65B E65C E65D
J44.92	04	E60A E60B E65A
		E65B E65C E65D
J44.93	04	E60A E60B E65A
		E65B E65C E65D
J44.99	04	E60A E60B E65A
		E65B E65C E65D
J45.0	04	E65A E65B E65C
		E65D
J45.1	04	E65A E65B E65C
		E65D
J45.8	04	E65A E65B E65C
		E65D
J45.9	04	E65A E65B E65C
		E65D
J46	Prä	A11C
	04	E65A E65B E65C
		E65D
J47	04	E60A E60B E65A
		E65B E65C E65D
J60	04	E60A E60B E74Z
J61	04	E60A E60B E74Z
J62.0	04	E60A E60B E74Z
J62.8	04	E60A E60B E74Z
J63.0	04	E60A E60B E74Z
J63.1	04	E60A E60B E74Z

DIAG

ICD	MDC	DRG
J63.2	04	E60A E60B E74Z
J63.3	04	E60A E60B E74Z
J63.4	04	E60A E60B E74Z
J63.5	04	E60A E60B E74Z
J63.8	04	E60A E60B E74Z
J64	04	E60A E60B E74Z
J65	04	E76A E76B E76C E76D
J66.0	04	E60A E60B E74Z
J66.1	04	E60A E60B E74Z
J66.2	04	E60A E60B E74Z
J66.8	04	E60A E60B E74Z
J67.0	Prä	A11C
	04	E60A E60B E74Z
J67.1	Prä	A11C
	04	E60A E60B E74Z
J67.2	Prä	A11C
	04	E60A E60B E74Z
J67.3	Prä	A11C
	04	E60A E60B E74Z
J67.4	Prä	A11C
	04	E60A E60B E74Z
J67.5	Prä	A11C
	04	E60A E60B E74Z
J67.6	Prä	A11C
	04	E60A E60B E74Z
J67.7	Prä	A11C
	04	E60A E60B E74Z
J67.8	Prä	A11C
	04	E60A E60B E74Z
J67.9	Prä	A11C
	04	E60A E60B E74Z
J68.0	04	E77A E77B E77C
J68.1	04	E64A E64B E64C E64D
J68.2	04	E77A E77B E77C
J68.3	04	E75A E75B E75C
J68.4	04	E60A E60B E74Z
J68.8	04	E75A E75B E75C
J68.9	04	E75A E75B E75C
J69.0	04	E77A E77B E77C
	15	MSPNG SPNG
J69.1	04	E77A E77B E77C
	15	MSPNG SPNG
J69.8	04	E77A E77B E77C
	15	MSPNG SPNG
J70.0	04	E75A E75B E75C
J70.1	04	E60A E60B E74Z
J70.2	04	E75A E75B E75C
J70.3	04	E75A E75B E75C
J70.4	04	E75A E75B E75C
J70.8	04	E75A E75B E75C
J70.9	04	E75A E75B E75C
J80.01	04	E60A E60B
	15	MSPNG SPNG
	Prä	A11C
J80.02	04	E60A E60B
	15	MSPNG SPNG
	Prä	A11C
J80.03	04	E60A E60B
	15	MSPNG SPNG
	Prä	A11C
J80.09	04	E60A E60B
	15	MSPNG SPNG
	Prä	A11C
J81	05	F62A F62B F62C F62D F66A
J82	04	E60A E60B E74Z
J84.0	04	E60A E60B E74Z
J84.1	Prä	A11C
	04	E60A E60B E74Z
J84.8	04	E60A E60B E74Z
J84.9	04	E60A E60B E74Z
J85.0	04	E77A E77B
	15	MSPNG SPNG
	Prä	A11C
J85.1	04	E77A E77B
	15	MSPNG SPNG
	Prä	A11C
J85.2	04	E77A E77B
	15	MSPNG SPNG
	Prä	A11C
J85.3	04	E77A E77B
	15	MSPNG SPNG
	Prä	A11C
J86.0	04	E77A E77B
	15	MSPNG SPNG
	Prä	A11C
J86.9	04	E77A E77B
	15	MSPNG SPNG
	Prä	A11C
J90	04	E73A E73B
	15	MSPNG SPNG
J91	05	F66A
	15	MSPNG SPNG
	Prä	961Z
J92.0	04	E77A E77B E77C
J92.9	04	E77A E77B E77C
J93.0	Prä	A11C
	04	E76A E76B E76C E76D E76E
	15	P65B P66B P66C P67A P67B P67C
J93.1	04	E76A E76B E76C E76D E76E
J93.8	04	E76A E76B E76C E76D E76E
J93.9	04	E76A E76B E76C E76D E76E
J94.0	04	E73A E73B
	15	MSPNG SPNG
J94.1	04	E77A E77B E77C
J94.2	04	E73A E73B
	15	MSPNG SPNG
J94.8	04	E73A E73B
	15	MSPNG SPNG
J94.9	04	E73A E73B
	15	MSPNG SPNG
J95.0	04	E75A E75B E75C
	15	MSPNG SPNG
J95.1	Prä	A11C
	04	E64A E64B E64C E64D
J95.2	04	E64A E64B E64C E64D
J95.3	04	E64A E64B E64C E64D
J95.4	04	E75A E75B E75C
J95.5	04	E75A E75B E75C
J95.9	04	E75A E75B E75C
J95.80	04	E76A E76B E76C E76D E76E
	15	MSPNG SPNG
J95.81	04	E75A E75B E75C
J95.82	04	E75A E75B E75C
J95.88	04	E75A E75B E75C
J96.00	04	E64A E64B E64C E64D E86B
J96.01	04	E64A E64B E64C E64D E86B
J96.09	04	E64A E64B E64C E64D E86B
J96.10	04	E64A E64B E64C E64D
J96.11	04	E64A E64B E64C E64D
J96.19	04	E64A E64B E64C E64D
J96.90	04	E64A E64B E64C E64D
J96.91	04	E64A E64B E64C E64D
J96.99	04	E64A E64B E64C E64D
J98.0	04	E65A E65B E65C E65D
J98.2	04	E76A E76B E76C E76D E76E
J98.3	04	E75A E75B E75C
J98.4	04	E75A E75B E75C
J98.6	04	E75A E75B E75C
J98.7	04	E75A E75B E75C
J98.8	04	E75A E75B E75C
J98.9	04	E75A E75B E75C
J98.10	04	E75A E75B E75C
J98.11	04	E75A E75B E75C
J98.12	04	E75A E75B E75C
J98.18	04	E75A E75B E75C
J98.50	04	E75A E75B E75C
J98.58	04	E75A E75B E75C
J99.0	Prä	961Z
J99.1	Prä	961Z
J99.8	Prä	961Z
J99.21	Prä	961Z
J99.22	Prä	961Z A93A A97A A97B A97C A97D
	17	R50A R60A R60B R61A R61B R61C
J99.23	Prä	961Z A93A A97A A97B A97C A97D
	17	R50A R60A R60B R61A R61B R61C
K00.0	03	D40Z D67A D67B
K00.1	03	D40Z D67A D67B
K00.2	03	D40Z D67A D67B
K00.3	03	D40Z D67A D67B
K00.4	03	D40Z D67A D67B
K00.5	03	D40Z D67A D67B
K00.6	03	D40Z D67A D67B
K00.7	03	D40Z D67A D67B
K00.8	03	D40Z D67A D67B
K00.9	03	D40Z D67A D67B
K01.0	03	D40Z D67A D67B
K01.1	03	D40Z D67A D67B
K02.0	03	D40Z D67A D67B
K02.1	03	D40Z D67A D67B
K02.2	03	D40Z D67A D67B
K02.3	03	D40Z D67A D67B
K02.4	03	D40Z D67A D67B
K02.5	03	D40Z D67A D67B
K02.8	03	D40Z D67A D67B
K02.9	03	D40Z D67A D67B
K03.0	03	D40Z D67A D67B
K03.1	03	D40Z D67A D67B
K03.2	03	D40Z D67A D67B
K03.3	03	D40Z D67A D67B
K03.4	03	D40Z D67A D67B
K03.5	03	D40Z D67A D67B
K03.6	03	D40Z D67A D67B
K03.7	03	D40Z D67A D67B

ICD	MDC	DRG
K03.8	03	D40Z D67A D67B
K03.9	03	D40Z D67A D67B
K04.0	03	D40Z D67A D67B
K04.1	03	D40Z D67A D67B
K04.2	03	D40Z D67A D67B
K04.3	03	D40Z D67A D67B
K04.4	03	D40Z D67A D67B
K04.5	03	D40Z D67A D67B
K04.6	03	D40Z D67A D67B
K04.7	03	D40Z D67A D67B
K04.8	03	D40Z D67A D67B
K04.9	03	D40Z D67A D67B
K05.0	03	D40Z D67A D67B
K05.1	03	D40Z D67A D67B
K05.2	03	D40Z D67A D67B
K05.3	03	D40Z D67A D67B
K05.4	03	D40Z D67A D67B
K05.5	03	D40Z D67A D67B
K05.6	03	D40Z D67A D67B
K06.0	03	D40Z D67A D67B
K06.1	03	D40Z D67A D67B
K06.2	03	D40Z D67A D67B
K06.8	03	D40Z D67A D67B
K06.9	03	D40Z D67A D67B
K07.0	03	D40Z D67A D67B
K07.1	03	D40Z D67A D67B
K07.2	03	D40Z D67A D67B
K07.3	03	D40Z D67A D67B
K07.4	03	D40Z D67A D67B
K07.5	03	D40Z D67A D67B
K07.6	03	D40Z D67A D67B
K07.8	03	D40Z D67A D67B
	15	MSPNG SPNG
K07.9	03	D40Z D67A D67B
K08.0	03	D40Z D67A D67B
K08.1	03	D40Z D67A D67B
K08.2	03	D40Z D67A D67B
K08.3	03	D40Z D67A D67B
K08.9	03	D40Z D67A D67B
K08.81	03	D40Z D67A D67B
K08.88	03	D40Z D67A D67B
K09.0	03	D40Z D67A D67B
K09.1	03	D40Z D67A D67B
K09.2	03	D40Z D67A D67B
K09.8	03	D40Z D67A D67B
K09.9	03	D40Z D67A D67B
K10.0	03	D40Z D67A D67B
K10.1	03	D40Z D67A D67B
K10.3	03	D40Z D67A D67B
K10.8	03	D40Z D67A D67B
K10.9	03	D40Z D67A D67B
K10.20	03	D06B D40Z D67A D67B
K10.21	03	D06B D40Z D67A D67B
K10.28	03	D06B D40Z D67A D67B
K10.29	03	D40Z D67A D67B
K11.0	03	D66A D66B
K11.1	03	D66A D66B
K11.2	03	D66A D66B
K11.3	03	D06B D66A D66B
K11.4	03	D66A D66B
K11.5	03	D66A D66B
K11.6	03	D66A D66B
K11.7	03	D66A D66B
K11.8	03	D66A D66B
K11.9	03	D66A D66B
K12.0	03	D40Z D67A D67B
K12.1	03	D40Z D67A D67B
K12.3	03	D40Z D67A D67B
K12.20	Prä	A11C
	03	D06B D40Z D67A D67B
K12.21	Prä	A11C
	03	D06B D40Z D67A D67B
K12.22	Prä	A11C
	03	D06B D40Z D67A D67B
K12.23	03	D40Z D67A D67B
K12.28	03	D06B D40Z D67A D67B
K12.29	03	D40Z D67A D67B
K13.0	03	D40Z D67A D67B
K13.1	03	D40Z D67A D67B
K13.2	03	D40Z D67A D67B
K13.3	03	D40Z D67A D67B
K13.4	03	D40Z D67A D67B
K13.5	03	D40Z D67A D67B
K13.6	03	D40Z D67A D67B
K13.7	03	D40Z D67A D67B
K14.0	03	D40Z D67A D67B
K14.1	03	D40Z D67A D67B
K14.2	03	D40Z D67A D67B
K14.3	03	D40Z D67A D67B
K14.4	03	D40Z D67A D67B
K14.5	03	D40Z D67A D67B
K14.6	03	D40Z D67A D67B
K14.8	03	D40Z D67A D67B
K14.9	03	D40Z D67A D67B
K20	06	G72A G72B
K21.0	06	G72A G72B
K21.9	06	G72A G72B
K22.0	06	G67A G67B G67C G67D
K22.1	06	G67A G67B G67C G67D
K22.2	06	G67A G67B G67C G67D
	15	MSPNG SPNG
K22.3	06	G35A G35B G67A G67B G67C G67D
	15	MSPNG SPNG
	Prä	A11C
K22.4	06	G67A G67B G67C G67D
	15	MSPNG SPNG
K22.5	06	G67A G67B G67C G67D
K22.6	06	G46A G46B G67A G67B G67C G67D
K22.7	06	G67A G67B G67C G67D
K22.9	06	G72A G72B
K22.80	06	G72A G72B
K22.81	06	G72A G72B
K22.88	06	G72A G72B
K23.0	Prä	961Z
K23.1	Prä	961Z
K23.8	Prä	961Z
K25.0	Prä	A11C
	06	G46A G46B G67A G67B G67C G67D
K25.1	Prä	A11C
	06	G35A G35B G46A G46B G67A G67B G67C G67D
K25.2	Prä	A11C
	06	G35A G35B G46A G46B G67A G67B G67C G67D
K25.3	06	G67A G67B G67C G67D
K25.4	06	G46A G46B G67A G67B G67C G67D
K25.5	06	G46A G46B G67A G67B G67C G67D
K25.6	06	G46A G46B G67A G67B G67C G67D
K25.7	06	G67A G67B G67C G67D
K25.9	06	G67A G67B G67C G67D
K26.0	Prä	A11C
	06	G46A G46B G67A G67B G67C G67D
K26.1	Prä	A11C
	06	G35A G35B G46A G46B G67A G67B G67C G67D
K26.2	Prä	A11C
	06	G35A G35B G46A G46B G67A G67B G67C G67D
K26.3	06	G67A G67B G67C G67D
K26.4	06	G46A G46B G67A G67B G67C G67D
K26.5	06	G46A G46B G67A G67B G67C G67D
K26.6	06	G46A G46B G67A G67B G67C G67D
K26.7	06	G67A G67B G67C G67D
K26.9	06	G67A G67B G67C G67D
K27.0	06	G46A G46B G67A G67B G67C G67D
K27.1	06	G46A G46B G67A G67B G67C G67D
K27.2	06	G46A G46B G67A G67B G67C G67D
K27.3	06	G67A G67B G67C G67D
K27.4	06	G46A G46B G67A G67B G67C G67D
K27.5	06	G46A G46B G67A G67B G67C G67D
K27.6	06	G46A G46B G67A G67B G67C G67D
K27.7	06	G67A G67B G67C G67D
K27.9	06	G67A G67B G67C G67D
K28.0	06	G46A G46B G67A G67B G67C G67D
K28.1	06	G35A G35B G46A G46B G67A G67B G67C G67D
K28.2	06	G35A G35B G46A G46B G67A G67B G67C G67D
K28.3	06	G67A G67B G67C G67D
K28.4	06	G46A G46B G67A G67B G67C G67D
K28.5	06	G46A G46B G67A G67B G67C G67D
K28.6	06	G46A G46B G67A

DIAG

ICD	MDC	DRG
		G67B G67C G67D
K28.7	06	G67A G67B G67C G67D
K28.9	06	G67A G67B G67C G67D
K29.0	06	G46A G46B G67A G67B G67C G67D
K29.1	06	G72A G72B
K29.2	06	G72A G72B
K29.3	06	G72A G72B
K29.4	06	G72A G72B
K29.5	06	G72A G72B
K29.6	06	G72A G72B
K29.7	06	G72A G72B
K29.8	06	G72A G72B
K29.9	06	G72A G72B
K30	06	G72A G72B
K31.0	06	G67A G67B G67C G67D
K31.2	06	G67A G67B G67C G67D
K31.3	06	G67A G67B G67C G67D
K31.4	06	G67A G67B G67C G67D
K31.5	06	G67A G67B G67C G67D
K31.6	06	G35A G35B G67A G67B G67C G67D
	15	MSPNG SPNG
K31.7	06	G67A G67B G67C G67D
K31.9	06	G72A G72B
K31.10	06	G67A G67B G67C G67D
K31.11	06	G67A G67B G67C G67D
K31.12	06	G67A G67B G67C G67D
K31.18	06	G67A G67B G67C G67D
K31.81	06	G67A G67B G67C G67D
K31.82	06	G46A G46B G67A G67B G67C G67D
K31.88	06	G72A G72B
K35.2	06	G22A G22B G22C G71A G71B
	15	MSPNG SPNG
K35.8	06	G72A G72B
	15	MSPNG SPNG
K35.30	06	G72A G72B
	15	MSPNG SPNG
K35.31	06	G22A G22B G22C G71A G71B
	15	MSPNG SPNG
K35.32	06	G22A G22B G22C G70A G70B G70C
	15	MSPNG SPNG
K36	06	G72A G72B
K37	06	G72A G72B
	15	MSPNG SPNG
K38.0	06	G71A G71B
K38.1	06	G71A G71B
K38.2	06	G71A G71B
K38.3	06	G71A G71B
K38.8	06	G72A G72B
K38.9	06	G72A G72B
K40.00	06	G09C G09D G71A G71B
	08	I27B
	15	MSPNG SPNG
K40.01	06	G09C G09D G71A G71B
	08	I27B
	15	MSPNG SPNG
K40.10	06	G09C G09D G71A G71B
	08	I27B
	15	MSPNG SPNG
	Prä	A11C
K40.11	06	G09C G09D G71A G71B
	08	I27B
	15	MSPNG SPNG
	Prä	A11C
K40.20	06	G09C G09D G71A G71B
	08	I27B
K40.21	06	G09C G09D G71A G71B
	08	I27B
K40.30	06	G09C G09D G71A G71B
	08	I27B
	15	MSPNG SPNG
K40.31	06	G09C G09D G71A G71B
	08	I27B
	15	MSPNG SPNG
K40.40	06	G09C G09D G71A G71B
	08	I27B
	15	MSPNG SPNG
	Prä	A11C
K40.41	06	G09C G09D G71A G71B
	08	I27B
	15	MSPNG SPNG
	Prä	A11C
K40.90	06	G09C G09D G71A G71B
	08	I27B
K40.91	06	G09C G09D G71A G71B
	08	I27B
K41.00	06	G09C G09D G71A G71B
	08	I27B
	15	MSPNG SPNG
K41.01	06	G09C G09D G71A G71B
	08	I27B
	15	MSPNG SPNG
K41.10	06	G09C G09D G71A G71B
	08	I27B
	15	MSPNG SPNG
	Prä	A11C
K41.11	06	G09C G09D G71A G71B
	08	I27B
	15	MSPNG SPNG
	Prä	A11C
K41.20	06	G09C G09D G71A G71B
	08	I27B
K41.21	06	G09C G09D G71A G71B
	08	I27B
K41.30	06	G09C G09D G71A G71B
	08	I27B
	15	MSPNG SPNG
K41.31	06	G09C G09D G71A G71B
	08	I27B
	15	MSPNG SPNG
K41.40	06	G09C G09D G71A G71B
	08	I27B
	15	MSPNG SPNG
	Prä	A11C
K41.41	06	G09C G09D G71A G71B
	08	I27B
	15	MSPNG SPNG
	Prä	A11C
K41.90	06	G09C G09D G71A G71B
	08	I27B
K41.91	06	G09C G09D G71A G71B
	08	I27B
K42.0	06	G71A G71B
	08	I27B
	15	MSPNG SPNG
K42.1	06	G71A G71B
	08	I27B
	15	MSPNG SPNG
	Prä	A11C
K42.9	06	G71A G71B
	08	I27B
K43.0	06	G71A G71B
	08	I27B
	15	MSPNG SPNG
K43.1	06	G71A G71B
	08	I27B
	15	MSPNG SPNG
	Prä	A11C
K43.2	06	G71A G71B
	08	I27B
K43.3	06	G71A G71B
	08	I27B
	15	MSPNG SPNG
K43.4	06	G71A G71B
	08	I27B
	15	MSPNG SPNG
	Prä	A11C
K43.5	06	G71A G71B
	08	I27B
K43.60	06	G71A G71B
	08	I27B
	15	MSPNG SPNG
K43.68	06	G71A G71B
	08	I27B
	15	MSPNG SPNG
K43.69	06	G71A G71B
	08	I27B
	15	MSPNG SPNG
K43.70	06	G71A G71B
	08	I27B
	15	MSPNG SPNG
	Prä	A11C
K43.78	06	G71A G71B
	08	I27B
	15	MSPNG SPNG
	Prä	A11C
K43.79	06	G71A G71B
	08	I27B

ICD	MDC	DRG
	15	MSPNG SPNG
	Prä	A11C
K43.90	06	G71A G71B
	08	I27B
K43.98	06	G71A G71B
	08	I27B
K43.99	06	G71A G71B
	08	I27B
K44.0	06	G67A G67B G67C
		G67D
	08	I27B
	15	MSPNG SPNG
K44.1	06	G71A G71B
	08	I27B
	15	MSPNG SPNG
	Prä	A11C
K44.9	06	G72A G72B
	08	I27B
K45.0	06	G71A G71B
	08	I27B
K45.1	06	G71A G71B
	08	I27B
	15	MSPNG SPNG
	Prä	A11C
K45.8	06	G71A G71B
	08	I27B
K46.0	06	G71A G71B
	08	I27B
K46.1	06	G71A G71B
	08	I27B
	15	MSPNG SPNG
K46.9	06	G71A G71B
	08	I27B
K50.0	06	G02A G38A G38B
		G38C G46A G46C
		G64A G64B G64C
		G86A
K50.1	06	G02A G38A G38B
		G38C G46A G46C
		G64A G64B G64C
		G86A
K50.9	06	G46A G46C G64A
		G64B G64C G86A
K50.80	06	G02A G38A G38B
		G38C G46A G46C
		G64A G64B G64C
		G86A
K50.81	06	G02A G38A G38B
		G38C G46A G46C
		G64A G64B G64C
		G86A
K50.82	06	G02A G38A G38B
		G38C G46A G46C
		G64A G64B G64C
		G86A
K50.88	06	G46A G46C G64A
		G64B G64C G86A
K51.0	06	G02A G38A G38B
		G38C G46A G46C
		G64A G64B G64C
		G86A
K51.2	06	G02A G38A G38B
		G38C G46A G46C
		G64A G64B G64C
		G86A
K51.3	06	G02A G38A G38B
		G38C G46A G46C
		G64A G64B G64C
		G86A
K51.4	06	G02A G38A G38B
		G38C G46A G46C
		G64A G64B G64C
		G86A
K51.5	06	G02A G38A G38B
		G38C G46A G46C
		G64A G64B G64C
		G86A
K51.8	06	G46A G46C G64A
		G64B G64C G86A
K51.9	06	G46A G46C G64A
		G64B G64C G86A
K52.0	06	G71A G71B
K52.1	06	G71A G71B
	15	MSPNG SPNG
K52.2	06	G72A G72B
	15	P65B P66B P66C
		P67A P67B P67C
K52.8	06	G72A G72B
	15	P65B P66B P66C
		P67A P67B P67C
K52.9	06	G72A G72B
K52.30	06	G67A G67B G67C
		G67D
	15	P65B P66B P66C
		P67A P67B P67C
K52.31	06	G67A G67B G67C
		G67D
	15	P65B P66B P66C
		P67A P67B P67C
K52.32	06	G67A G67B G67C
		G67D
	15	P65B P66B P66C
		P67A P67B P67C
K52.38	06	G67A G67B G67C
		G67D
	15	P65B P66B P66C
		P67A P67B P67C
K55.0	06	G70A G70B G70C
	15	MSPNG SPNG
K55.1	06	G70A G70B G70C
K55.8	06	G71A G71B
K55.9	06	G71A G71B
K55.21	06	G71A G71B
	15	MSPNG SPNG
K55.22	06	G46A G46B G67A
		G67B G67C G67D
K55.31	06	G71A G71B
K55.32	06	G46A G46B G71A
		G71B
K56.0	06	G13A G35A G35B
		G72A G72B
	15	MSPNG SPNG
K56.1	06	G72A G72B
	15	MSPNG SPNG
K56.2	06	G72A G72B
	15	MSPNG SPNG
K56.3	06	G72A G72B
K56.4	06	G72A G72B
	15	MSPNG SPNG
K56.5	06	G72A G72B
K56.6	06	G72A G72B
	15	MSPNG SPNG
K56.7	06	G72A G72B
	15	MSPNG SPNG
K57.02	06	G35A G35B G67A
		G67B G67C G67D
K57.03	06	G35A G35B G46A
		G46B G67A G67B
		G67C G67D
K57.10	06	G67A G67B G67C
		G67D
K57.11	06	G46A G46B G67A
		G67B G67C G67D
K57.12	06	G67A G67B G67C
		G67D
K57.13	06	G46A G46B G67A
		G67B G67C G67D
K57.22	06	G35A G35B G67A
		G67B G67C G67D
K57.23	06	G35A G35B G46A
		G46B G67A G67B
		G67C G67D
K57.30	06	G67A G67B G67C
		G67D
K57.31	06	G46A G46B G67A
		G67B G67C G67D
K57.32	06	G67A G67B G67C
		G67D
K57.33	06	G46A G46B G67A
		G67B G67C G67D
K57.42	06	G35A G35B G67A
		G67B G67C G67D
K57.43	06	G35A G35B G46A
		G46B G67A G67B
		G67C G67D
K57.50	06	G67A G67B G67C
		G67D
K57.51	06	G46A G46B G67A
		G67B G67C G67D
K57.52	06	G67A G67B G67C
		G67D
K57.53	06	G46A G46B G67A
		G67B G67C G67D
K57.82	06	G67A G67B G67C
		G67D
K57.83	06	G46A G46B G67A
		G67B G67C G67D
K57.90	06	G67A G67B G67C
		G67D
K57.91	06	G46A G46B G67A
		G67B G67C G67D
K57.92	06	G67A G67B G67C
		G67D
K57.93	06	G46A G46B G67A
		G67B G67C G67D
K58.1	06	G72A G72B
K58.2	06	G72A G72B
K58.3	06	G72A G72B
K58.8	06	G72A G72B
K59.00	06	G72A G72B
K59.01	06	G72A G72B
K59.1	06	G72A G72B
K59.02	06	G72A G72B
K59.2	06	G67A G67B G67C
		G67D
K59.3	06	G71A G71B
	15	MSPNG SPNG
K59.4	06	G67A G67B G67C
		G67D
K59.8	06	G72A G72B
K59.09	06	G72A G72B
K59.9	06	G72A G72B
K60.0	06	G71A G71B
K60.1	06	G71A G71B
K60.2	06	G71A G71B
	15	P65B P66B P66C
		P67A P67B P67C
K60.3	06	G71A G71B
K60.4	06	G71A G71B
K60.5	06	G71A G71B

DIAG

ICD	MDC	DRG
K61.0	06	G71A G71B G86C
	15	MSPNG SPNG
K61.1	06	G71A G71B G86C
	15	MSPNG SPNG
K61.2	06	G71A G71B G86C
	15	MSPNG SPNG
K61.3	06	G71A G71B G86C
	15	MSPNG SPNG
K61.4	06	G71A G71B G86C
	15	MSPNG SPNG
K62.0	06	G71A G71B
K62.1	06	G71A G71B
K62.2	06	G71A G71B
	15	MSPNG SPNG
K62.3	06	G71A G71B
	15	MSPNG SPNG
K62.4	06	G71A G71B
	15	MSPNG SPNG
K62.6	06	G71A G71B
K62.7	06	G71A G71B
K62.8	06	G71A G71B
K62.9	06	G71A G71B
K62.50	06	G67A G67B G67C
		G67D
K62.51	06	G67A G67B G67C
		G67D
K62.59	06	G67A G67B G67C
		G67D
K63.0	06	G70A G70B G70C
	15	MSPNG SPNG
K63.1	06	G02A G02B G35A
		G35B G38A G38B
		G38C G70A G70B
		G70C
	15	MSPNG SPNG
	Prä	A11C
K63.2	06	G02A G35A G35B
		G38A G38B G38C
		G70A G70B G70C
	15	MSPNG SPNG
K63.3	06	G70A G70B G70C
	15	MSPNG SPNG
K63.4	06	G71A G71B
K63.5	06	G71A G71B
K63.8	06	G71A G71B
K63.9	06	G71A G71B
K64.0	06	G71A G71B
K64.1	06	G72A G72B
K64.2	06	G72A G72B
K64.3	06	G71A G71B
K64.4	06	G72A G72B
K64.5	06	G72A G72B
K64.8	06	G72A G72B
K64.9	06	G72A G72B
K65.00	06	G02A G02B G22A
		G22C G35A G35B
		G38A G38B G38C
		G70A G70B G70C
	15	MSPNG SPNG
	Prä	A11C
K65.8	06	G02A G02B G22A
		G22C G35A G35B
		G38A G38B G38C
		G70A G70B G70C
	15	MSPNG SPNG
K65.09	06	G02A G02B G22A
		G22C G35A G35B
		G38A G38B G38C
		G70A G70B G70C
	15	MSPNG SPNG

ICD	MDC	DRG
	Prä	A11C
K65.9	06	G02A G02B G22A
		G22C G38A G38B
		G38C G70A G70B
		G70C
	15	MSPNG SPNG
K66.0	06	G71A G71B
	15	MSPNG SPNG
	Prä	A11C
K66.1	06	G71A G71B
	15	MSPNG SPNG
	Prä	A11C
K66.2	11	L64A L64B L64C
	15	MSPNG SPNG
K66.8	06	G71A G71B
	15	MSPNG SPNG
	Prä	A11C
K66.9	Prä	A11C
	06	G71A G71B
K67.0	15	MSPNG SPNG
	Prä	961Z A11C
K67.1	15	MSPNG SPNG
	Prä	961Z A11C
K67.2	Prä	961Z A11C
K67.3	15	MSPNG SPNG
	Prä	961Z A11C
K67.8	15	MSPNG SPNG
	Prä	961Z A11C
K70.0	07	H63A H63B H63C
		H63D
K70.1	07	H60A H60B
K70.2	07	H60A H60B
K70.3	07	H60A H60B
K70.9	07	H60A H60B
K70.40	Prä	A11C
	07	H60A H60B
K70.41	Prä	A11C
	07	H60A H60B
K70.42	Prä	A11C
	07	H60A H60B
K70.48	Prä	A11C
	07	H60A H60B
K71.0	07	H63A H63B H63C
		H63D
	15	MSPNG SPNG
K71.1	07	H63A H63B H63C
		H63D
	15	MSPNG SPNG
K71.2	07	H63A H63B H63C
		H63D
	15	MSPNG SPNG
K71.3	07	H63A H63B H63C
		H63D
	15	MSPNG SPNG
K71.4	07	H63A H63B H63C
		H63D
	15	MSPNG SPNG
K71.5	07	H63A H63B H63C
		H63D
	15	MSPNG SPNG
K71.6	07	H63A H63B H63C
		H63D
	15	MSPNG SPNG
K71.7	07	H60A H60B
	15	MSPNG SPNG
K71.9	07	H63A H63B H63C
		H63D
	15	MSPNG SPNG
K71.80	07	H63A H63B H63C
		H63D

ICD	MDC	DRG
	15	MSPNG SPNG
K71.88	07	H63A H63B H63C
		H63D
	15	MSPNG SPNG
K72.0	06	G35A G35B
	07	H63A H63B H63C
		H63D
	15	MSPNG SPNG
	Prä	A11C
K72.9	07	H63A H63B H63C
		H63D
K72.10	06	G35A G35B
	07	H63A H63B H63C
		H63D
	15	MSPNG SPNG
	Prä	A11C
K72.18	07	H63A H63B H63C
		H63D
K72.71	Prä	961Z
K72.72	Prä	961Z
K72.73	Prä	961Z A11C
K72.74	Prä	961Z A11C
K72.79	Prä	961Z
K73.0	07	H63A H63B H63C
		H63D
K73.1	07	H63A H63B H63C
		H63D
K73.2	07	H63A H63B H63C
		H63D
K73.8	07	H63A H63B H63C
		H63D
K73.9	07	H63A H63B H63C
		H63D
K74.0	07	H60A H60B
	15	MSPNG SPNG
K74.1	07	H63A H63B H63C
		H63D
K74.2	07	H60A H60B
	15	MSPNG SPNG
K74.3	07	H60A H60B
	15	MSPNG SPNG
	Prä	A11C
K74.4	07	H60A H60B
	15	MSPNG SPNG
K74.5	07	H60A H60B
	15	MSPNG SPNG
K74.6	07	H60A H60B
	15	MSPNG SPNG
K74.70	Prä	961Z
K74.71	Prä	961Z
K74.72	Prä	961Z
K75.0	07	H63A H63B H63C
		H63D
	15	MSPNG SPNG
	Prä	A11C
K75.1	07	H63A H63B H63C
		H63D
	15	MSPNG SPNG
	Prä	A11C
K75.2	07	H63A H63B H63C
		H63D
	15	MSPNG SPNG
K75.3	07	H63A H63B H63C
		H63D
	15	MSPNG SPNG
K75.4	07	H63A H63B H63C
		H63D
	15	MSPNG SPNG
	Prä	A11C
K75.8	07	H63A H63B H63C

ICD	MDC	DRG
		H63D
	15	MSPNG SPNG
K75.9	07	H63A H63B H63C
		H63D
	15	MSPNG SPNG
K76.0	07	H63A H63B H63C
		H63D
	15	MSPNG SPNG
K76.1	07	H63A H63B H63C
		H63D
K76.2	07	H63A H63B H63C
		H63D
	15	MSPNG SPNG
K76.3	07	H63A H63B H63C
		H63D
	15	MSPNG SPNG
K76.4	07	H63A H63B H63C
		H63D
	15	MSPNG SPNG
K76.5	Prä	A93A A97A A97B
	07	H63A H63B H63C
		H63D
	17	R50A R60A R61A
		R61B R61C R63A
		R63B
K76.6	07	H63A H63B H63C
		H63D
	15	MSPNG SPNG
K76.7	07	H63A H63B H63C
		H63D
	15	MSPNG SPNG
	Prä	A11C
K76.8	07	H63A H63B H63C
		H63D
K76.9	07	H63A H63B H63C
		H63D
K77.0	15	MSPNG SPNG
	Prä	961Z
K77.8	15	MSPNG SPNG
	Prä	961Z
K77.11	15	MSPNG SPNG
	Prä	961Z
K77.12	15	MSPNG SPNG
	17	R50A R60A R60B
	Prä	961Z A93A A97A
		A97B A97C A97D
K77.13	15	MSPNG SPNG
	17	R50A R60A R60B
	Prä	961Z A93A A97A
		A97B A97C A97D
K77.14	15	MSPNG SPNG
	17	R50A R60A R60B
	Prä	961Z A93A A97A
		A97B A97C A97D
K77.21	15	MSPNG SPNG
	Prä	961Z
K77.22	15	MSPNG SPNG
	Prä	961Z
K77.23	15	MSPNG SPNG
	17	R50A R60A R60B
		R61A R61B R61C
	Prä	961Z A93A A97A
		A97B A97C A97D
K80.00	07	H07C H64A H64B
		H64C
K80.01	07	H07C H64A H64B
		H64C
K80.10	07	H64A H64B H64C
K80.11	07	H64A H64B H64C
K80.20	07	H64A H64B H64C
K80.21	07	H64A H64B H64C
K80.30	07	H64A H64B H64C
K80.31	07	H64A H64B H64C
K80.40	07	H64A H64B H64C
K80.41	07	H64A H64B H64C
K80.50	07	H64A H64B H64C
K80.51	07	H64A H64B H64C
K80.80	07	H64A H64B H64C
K80.81	07	H64A H64B H64C
K81.0	07	H07C H64A H64B
		H64C
K81.1	07	H64A H64B H64C
K81.8	07	H64A H64B H64C
K81.9	07	H64A H64B H64C
K82.0	07	H64A H64B H64C
K82.1	07	H64A H64B H64C
K82.2	07	H64A H64B H64C
K82.3	07	H64A H64B H64C
K82.4	07	H64A H64B H64C
K82.8	07	H64A H64B H64C
K82.9	07	H64A H64B H64C
K83.00	07	H64A H64B H64C
K83.01	07	H64A H64B H64C
K83.1	07	H64A H64B H64C
	15	MSPNG SPNG
K83.2	06	G35A G35B
	07	H64A H64B H64C
K83.3	07	H64A H64B H64C
K83.4	07	H64A H64B H64C
K83.5	07	H64A H64B H64C
K83.08	07	H64A H64B H64C
K83.8	07	H64A H64B H64C
K83.09	07	H64A H64B H64C
K83.9	07	H64A H64B H64C
K85.00	07	H07A H07B H62A
		H62B H62C
K85.01	Prä	A11C
	06	G35A G35B
	07	H07A H07B H62A
		H62B H62C
K85.10	07	H07A H07B H62A
		H62B H62C
K85.11	Prä	A11C
	06	G35A G35B
	07	H07A H07B H62A
		H62B H62C
K85.20	07	H07A H07B H62A
		H62B H62C
K85.21	Prä	A11C
	06	G35A G35B
	07	H07A H07B H62A
		H62B H62C
K85.30	07	H07A H07B H62A
		H62B H62C
K85.31	Prä	A11C
	06	G35A G35B
	07	H07A H07B H62A
		H62B H62C
K85.80	07	H07A H07B H62A
		H62B H62C
K85.81	Prä	A11C
	06	G35A G35B
	07	H07A H07B H62A
		H62B H62C
K85.90	07	H07A H07B H62A
		H62B H62C
K85.91	Prä	A11C
	07	H07A H07B H62A
		H62B H62C
K86.0	07	H07A H07B H62A
		H62B H62C
K86.1	07	H07A H07B H62A
		H62B H62C
K86.2	07	H07A H07B H62A
		H62B H62C
K86.3	07	H07A H07B H62A
		H62B H62C
K86.9	07	H07A H07B H62A
		H62B H62C
K86.80	07	H07A H07B H09A
		H62A H62B H62C
K86.81	07	H07A H07B H09A
		H62A H62B H62C
K86.82	07	H07A H07B H09A
		H62A H62B H62C
K86.83	07	H07A H07B H09A
		H62A H62B H62C
K86.84	07	H07A H07B H09A
		H62A H62B H62C
K86.88	07	H07A H07B H62A
		H62B H62C
K87.0	Prä	961Z
K87.1	Prä	961Z
K90.0	06	G67A G67B G67C
		G67D
K90.1	06	G67A G67B G67C
		G67D
K90.2	06	G67A G67B G67C
		G67D
	15	MSPNG SPNG
K90.3	06	G67A G67B G67C
		G67D
	15	MSPNG SPNG
K90.4	06	G72A G72B
K90.8	06	G72A G72B
K90.9	06	G72A G72B
K91.0	06	G72A G72B
K91.1	06	G70A G70B G70C
	15	MSPNG SPNG
K91.2	06	G70A G70B G70C
K91.3	06	G35A G35B G70A
		G70B G70C
K91.4	06	G70A G70B G70C
K91.5	07	H64A H64B H64C
K91.9	06	G71A G71B
K91.80	Prä	A11C A93A A97A
		A97B
	06	G35A G35B G70A
		G70B G70C
	17	R50A R60A R61A
		R61B R61C R63A
K91.81	07	H64A H64B H64C
K91.82	07	H62A H62B H62C
K91.83	06	G02A G35A G35B
		G38A G38B G38C
		G70A G70B G70C
K91.88	06	G70A G70B G70C
K92.0	06	G46A G46B G67A
		G67B G67C G67D
K92.1	06	G46A G46B G67A
		G67B G67C G67D
K92.2	06	G46A G46B G67A
		G67B G67C G67D
K92.8	06	G71A G71B
K92.9	06	G71A G71B
K93.0	Prä	961Z A11C
K93.1	15	MSPNG SPNG
	Prä	961Z A11C
K93.8	Prä	961Z
K93.21	Prä	961Z A11C

DIAG

ICD	MDC	DRG
K93.22	Prä	961Z A11C A93A A97A A97B A97C A97D
	17	R50A R60A R60B
K93.23	Prä	961Z A11C A93A A97A A97B A97C A97D
	17	R50A R60A R60B
K93.24	Prä	961Z A11C A93A A97A A97B A97C A97D
	17	R50A R60A R60B
K93.31	Prä	961Z
K93.32	Prä	961Z
K93.33	Prä	961Z A93A A97A A97B A97C A97D
	17	R50A R60A R60B R61A R61B R61C
K93.41	Prä	961Z
K93.42	Prä	961Z
K93.43	Prä	961Z A93A A97A A97B A97C A97D
	17	R50A R60A R60B R61A R61B R61C
L00.0	09	J61A J61B J61C J61D
	15	MSPNG SPNG
L00.1	09	J02A J02B J08Z J61A J61B
	15	MSPNG SPNG
L01.0	09	J64A J64B J64C J64D
L01.1	09	J64A J64B J64C J64D
	15	P65B P66B P66C P67A P67B P67C
L02.0	09	J64A J64B J64C J64D
L02.1	09	J64A J64B J64C J64D
L02.2	09	J64A J64B J64C J64D
	15	P65B P66B P66C P67A P67B P67C
L02.3	09	J64A J64B J64C J64D
L02.4	09	J64A J64B J64C J64D
L02.8	09	J64A J64B J64C J64D
L02.9	09	J64A J64B J64C J64D
L03.01	09	J02A J02B J03A J03B J64A J64B J64C J64D
L03.02	09	J02A J02B J03A J03B J04Z J64A J64B J64C J64D
L03.2	09	J02A J02B J03A J03B J04Z J64A J64B J64C J64D
L03.3	09	J02A J02B J03A J03B J04Z J64A J64B J64C J64D
L03.8	09	J02A J02B J03A J03B J04Z J64A J64B J64C J64D
L03.9	09	J64A J64B J64C J64D
L03.10	09	J02A J02B J03A J03B J04Z J64A J64B J64C J64D
L03.11	09	J02A J02B J03A J03B J04Z J64A J64B J64C J64D
L04.0	16	Q60A Q60B Q60C
L04.1	16	Q60A Q60B Q60C
L04.2	16	Q60A Q60B Q60C
L04.3	16	Q60A Q60B Q60C
L04.8	16	Q60A Q60B Q60C
L04.9	16	Q60A Q60B Q60C
L05.0	09	J64A J64B J64C J64D
L05.9	09	J64A J64B J64C J64D
L08.0	09	J64A J64B J64C J64D
	15	P65B P66B P66C P67A P67B P67C
L08.1	09	J61A J61B J61C J61D
L08.8	09	J64A J64B J64C J64D
L08.9	09	J64A J64B J64C J64D
L10.0	09	J61A J61B J61C J61D
L10.1	09	J02A J02B J08Z J61A J61B
L10.2	09	J61A J61B J61C J61D
	15	MSPNG SPNG
L10.3	09	J02A J02B J08Z J61A J61B
L10.4	09	J61A J61B J61C J61D
L10.5	09	J02A J02B J08Z J61A J61B
L10.8	09	J61A J61B J61C J61D
L10.9	09	J61A J61B J61C J61D
L11.0	09	J67Z
L11.1	09	J67Z
L11.8	09	J02A J02B J08Z J61A J61B
	15	MSPNG SPNG
L11.9	09	J02A J02B J08Z J61A J61B
	15	MSPNG SPNG
L12.0	09	J02A J02B J08Z J61A J61B
	15	MSPNG SPNG
L12.1	09	J61A J61B J61C J61D
L12.2	09	J02A J02B J08Z J61A J61B
L12.3	09	J61A J61B J61C J61D
	15	MSPNG SPNG
L12.8	09	J61A J61B J61C J61D
	15	MSPNG SPNG
L12.9	09	J61A J61B J61C J61D
	15	MSPNG SPNG
L13.0	09	J61A J61B J61C J61D
	15	MSPNG SPNG
L13.1	09	J61A J61B J61C J61D
	15	MSPNG SPNG
L13.8	09	J61A J61B J61C J61D
	15	MSPNG SPNG
L13.9	09	J61A J61B J61C J61D
L14	15	MSPNG SPNG
	Prä	961Z
L20.0	09	J61A J61B J61C J61D
L20.8	09	J61A J61B J61C J61D
L20.9	09	J61A J61B J61C J61D
L21.0	09	J67Z
L21.1	09	J61A J61B J61C J61D
L21.8	09	J67Z
L21.9	09	J67Z
L22	09	J67Z
L23.0	09	J67Z
L23.1	09	J67Z
L23.2	09	J67Z
L23.3	09	J67Z
L23.4	09	J61A J61B J61C J61D
L23.5	09	J67Z
L23.6	09	J67Z
L23.7	09	J67Z
L23.8	09	J61A J61B J61C J61D
L23.9	09	J61A J61B J61C J61D
L24.0	09	J67Z
L24.1	09	J67Z
L24.2	09	J67Z
L24.3	09	J67Z
L24.4	09	J67Z
L24.5	09	J67Z
L24.6	09	J67Z
L24.7	09	J67Z
L24.8	09	J61A J61B J61C J61D
L24.9	09	J61A J61B J61C J61D
L25.0	09	J67Z
L25.1	09	J67Z
L25.2	09	J61A J61B J61C J61D
L25.3	09	J67Z
L25.4	09	J67Z
L25.5	09	J67Z
L25.8	09	J61A J61B J61C J61D
L25.9	09	J61A J61B J61C J61D
L26	09	J61A J61B J61C J61D
L27.0	09	J61A J61B J61C J61D
L27.1	09	J61A J61B J61C J61D
L27.2	09	J67Z
L27.8	09	J67Z
L27.9	09	J67Z
L28.0	09	J61A J61B J61C J61D
L28.1	09	J61A J61B J61C J61D

ICD	MDC	DRG
L28.2	09	J61A J61B J61C J61D
L29.0	09	J67Z
L29.1	12	M64Z
L29.2	13	N61Z
L29.3	12	M64Z
	13	N61Z
L29.8	09	J67Z
L29.9	09	J67Z
L30.0	09	J61A J61B J61C J61D
L30.1	09	J61A J61B J61C J61D
L30.2	09	J61A J61B J61C J61D
L30.3	09	J61A J61B J61C J61D
L30.4	09	J61A J61B J61C J61D
L30.5	09	J67Z
L30.8	09	J61A J61B J61C J61D
L30.9	09	J61A J61B J61C J61D
L40.0	09	J02A J02B J08Z J61A J61B
L40.1	09	J02A J02B J08Z J61A J61B
	15	MSPNG SPNG
L40.2	09	J61A J61B J61C J61D
L40.3	09	J02A J02B J08Z J61A J61B
L40.4	09	J02A J02B J08Z J61A J61B
L40.5	08	I02A I02B I02C I08A I08B I13A I13B I66A I66B I66C
L40.8	09	J02A J02B J08Z J61A J61B
L40.9	09	J02A J02B J08Z J61A J61B
L40.70	Prä	961Z
L41.0	09	J61A J61B J61C J61D
L41.1	09	J61A J61B J61C J61D
L41.3	09	J61A J61B J61C J61D
L41.4	09	J61A J61B J61C J61D
L41.5	09	J02A J02B J08Z J61A J61B
L41.8	09	J61A J61B J61C J61D
L41.9	09	J61A J61B J61C J61D
L42	09	J67Z
L43.0	09	J61A J61B J61C J61D
L43.1	09	J61A J61B J61C J61D
L43.2	09	J61A J61B J61C J61D
L43.3	09	J61A J61B J61C J61D
L43.8	09	J61A J61B J61C J61D
L43.9	09	J61A J61B J61C J61D
L44.0	09	J02A J02B J08Z J61A J61B
L44.1	09	J67Z
L44.2	09	J67Z
L44.3	09	J67Z
L44.4	09	J61A J61B J61C J61D
L44.8	09	J61A J61B J61C J61D
L44.9	09	J61A J61B J61C J61D
L45	Prä	961Z
L50.0	09	J67Z
L50.1	09	J67Z
L50.2	09	J67Z
L50.3	09	J67Z
L50.4	09	J67Z
L50.5	09	J67Z
L50.6	09	J67Z
L50.8	09	J67Z
L50.9	09	J67Z
L51.0	09	J02A J02B J08Z J61A J61B
	15	MSPNG SPNG
L51.1	09	J02A J02B J08Z J61A J61B
	15	MSPNG SPNG
L51.8	09	J61A J61B J61C J61D
	15	MSPNG SPNG
L51.9	09	J61A J61B J61C J61D
	15	MSPNG SPNG
L51.20	09	J02A J02B J08Z J61A J61B
	15	MSPNG SPNG
	17	R50A R60A R61A R61B R61C R63A R63B
	Prä	A11C A93A A97A A97B
L51.21	09	J02A J02B J08Z J61A J61B
	15	MSPNG SPNG
	17	R50A R60A R61A R61B R61C R63A R63B
	Prä	A11C A93A A97A A97B
L52	09	J61A J61B J61C J61D
L53.0	09	J61A J61B J61C J61D
L53.1	09	J61A J61B J61C J61D
L53.2	09	J61A J61B J61C J61D
L53.3	09	J61A J61B J61C J61D
L53.8	09	J61A J61B J61C J61D
L53.9	09	J02A J02B J08Z J61A J61B
L54.0	Prä	961Z
L54.8	Prä	961Z
L55.0	09	J67Z
L55.1	09	J67Z
L55.2	09	J67Z
L55.8	09	J67Z
L55.9	09	J67Z
L56.0	09	J67Z
L56.1	09	J67Z
L56.2	09	J67Z
L56.3	09	J67Z
L56.4	09	J67Z
L56.8	09	J67Z
L56.9	09	J67Z
L57.0	09	J67Z
L57.1	09	J61A J61B J61C J61D
L57.2	09	J67Z
L57.3	09	J67Z
L57.4	09	J67Z
L57.5	09	J67Z
L57.8	09	J67Z
L57.9	09	J67Z
L58.0	09	J61A J61B J61C J61D
L58.1	09	J67Z
L58.9	09	J61A J61B J61C J61D
L59.0	09	J67Z
L59.8	09	J67Z
L59.9	09	J67Z
L60.0	09	J67Z
L60.1	09	J67Z
L60.2	09	J67Z
L60.3	09	J67Z
L60.4	09	J67Z
L60.5	09	J67Z
L60.8	09	J67Z
L60.9	09	J67Z
L62.0	Prä	961Z
L62.8	Prä	961Z
L63.0	09	J67Z
L63.1	09	J67Z
L63.2	09	J67Z
L63.8	09	J67Z
L63.9	09	J67Z
L64.0	09	J67Z
L64.8	09	J67Z
L64.9	09	J67Z
L65.0	09	J67Z
L65.1	09	J67Z
L65.2	09	J67Z
L65.8	09	J67Z
L65.9	09	J67Z
L66.0	09	J61A J61B J61C J61D
L66.1	09	J61A J61B J61C J61D
L66.2	09	J61A J61B J61C J61D
L66.3	09	J61A J61B J61C J61D
L66.4	09	J61A J61B J61C J61D
L66.8	09	J61A J61B J61C J61D
L66.9	09	J61A J61B J61C J61D
L67.0	09	J67Z
L67.1	09	J67Z
L67.8	09	J67Z
L67.9	09	J67Z
L68.0	09	J67Z
L68.1	09	J67Z
L68.2	09	J67Z
L68.3	09	J67Z

DIAG

ICD	MDC	DRG
L68.8	09	J67Z
L68.9	09	J67Z
L70.0	09	J67Z
L70.1	09	J61A J61B J61C J61D
L70.2	09	J61A J61B J61C J61D
L70.3	09	J61A J61B J61C J61D
L70.4	09	J67Z
L70.5	09	J67Z
L70.8	09	J67Z
L70.9	09	J67Z
L71.0	09	J67Z
L71.1	09	J67Z
L71.8	09	J67Z
L71.9	09	J67Z
L72.0	09	J67Z
L72.1	09	J67Z
L72.2	09	J67Z
L72.8	09	J67Z
L72.9	09	J67Z
L73.0	09	J67Z
L73.1	09	J67Z
L73.2	09	J61A J61B J61C J61D
L73.8	09	J67Z
L73.9	09	J67Z
L74.0	09	J67Z
L74.1	09	J67Z
L74.2	09	J67Z
L74.3	09	J67Z
L74.4	09	J67Z
	15	MSPNG SPNG
L74.8	09	J67Z
L74.9	09	J67Z
L75.0	09	J67Z
L75.1	09	J67Z
L75.2	09	J67Z
L75.8	09	J67Z
L75.9	09	J67Z
L80	09	J67Z
L81.0	09	J67Z
L81.1	09	J67Z
L81.2	09	J67Z
L81.3	09	J67Z
L81.4	09	J67Z
L81.5	09	J67Z
L81.6	09	J67Z
L81.7	09	J67Z
L81.8	09	J67Z
L81.9	09	J67Z
L82	09	J67Z
L83	09	J61A J61B J61C J61D
L84	09	J67Z
L85.0	09	J67Z
L85.1	09	J67Z
L85.2	09	J67Z
L85.3	09	J67Z
L85.8	09	J67Z
L85.9	09	J67Z
L86	Prä	961Z
L87.0	09	J67Z
L87.1	08	I66A I66B I66C
L87.2	09	J67Z
L87.8	09	J67Z
L87.9	09	J67Z
L88	09	J02A J02B J08Z J61A J61B
L89.00	09	J02A J02B J03A J03B J04Z J60A J60B J61A J61B J61C J61D
L89.01	09	J02A J02B J03A J03B J04Z J60A J60B J61A J61B J61C J61D
L89.02	09	J02A J02B J03A J03B J04Z J60A J60B J61A J61B J61C J61D
L89.03	09	J02A J02B J03A J03B J04Z J60A J60B J61A J61B J61C J61D
L89.04	09	J02A J02B J03A J03B J04Z J60A J60B J61A J61B J61C J61D
L89.05	09	J02A J02B J03A J03B J04Z J60A J60B J61A J61B J61C J61D
L89.06	09	J02A J02B J03A J03B J04Z J60A J60B J61A J61B J61C J61D
L89.07	09	J02A J02B J03A J03B J04Z J60A J60B J61A J61B J61C J61D
L89.08	09	J02A J02B J03A J03B J04Z J60A J60B J61A J61B J61C J61D
L89.09	09	J02A J02B J03A J03B J04Z J60A J60B J61A J61B J61C J61D
L89.10	09	J02A J02B J03A J03B J04Z J60A J60B J61A J61B J61C J61D
L89.11	09	J02A J02B J03A J03B J04Z J60A J60B J61A J61B J61C J61D
L89.12	09	J02A J02B J03A J03B J04Z J60A J60B J61A J61B J61C J61D
L89.13	09	J02A J02B J03A J03B J04Z J60A J60B J61A J61B J61C J61D
L89.14	09	J02A J02B J03A J03B J04Z J60A J60B J61A J61B J61C J61D
L89.15	09	J02A J02B J03A J03B J04Z J60A J60B J61A J61B J61C J61D
L89.16	09	J02A J02B J03A J03B J04Z J60A J60B J61A J61B J61C J61D
L89.17	09	J02A J02B J03A J03B J04Z J60A J60B J61A J61B J61C J61D
L89.18	09	J02A J02B J03A J03B J04Z J60A J60B J61A J61B J61C J61D
L89.19	09	J02A J02B J03A J03B J04Z J60A J60B J61A J61B J61C J61D
L89.20	Prä	A46A A46C A46D A46E B61B B61D
	09	J02A J02B J03A J03B J04Z J60A J60B J61A J61B J61C J61D
L89.21	Prä	A46A A46C A46D A46E B61B B61D
	09	J02A J02B J03A J03B J04Z J60A J60B J61A J61B J61C J61D
L89.22	Prä	A46A A46C A46D A46E B61B B61D
	09	J02A J02B J03A J03B J04Z J60A J60B J61A J61B J61C J61D
L89.23	Prä	A46A A46C A46D A46E B61B B61D
	09	J02A J02B J03A J03B J04Z J60A J60B J61A J61B J61C J61D
L89.24	Prä	A46A A46C A46D A46E B61B B61D
	09	J02A J02B J03A J03B J04Z J60A J60B J61A J61B J61C J61D
L89.25	Prä	A46A A46C A46D A46E B61B B61D
	09	J02A J02B J03A J03B J04Z J60A J60B J61A J61B J61C J61D
L89.26	Prä	A46A A46C A46D A46E B61B B61D
	09	J02A J02B J03A J03B J04Z J60A J60B J61A J61B J61C J61D
L89.27	Prä	A46A A46C A46D A46E B61B B61D
	09	J02A J02B J03A J03B J04Z J60A J60B J61A J61B J61C J61D
L89.28	Prä	A46A A46C A46D A46E B61B B61D
	09	J02A J02B J03A J03B J04Z J60A J60B J61A J61B J61C J61D
L89.29	Prä	A46A A46C A46D A46E B61B B61D
	09	J02A J02B J03A J03B J04Z J60A J60B J61A J61B J61C J61D

ICD	MDC	DRG
L89.30	Prä	A46A A46C A46D A46E B61B B61D
	09	J02A J02B J03A J03B J04Z J60A J61A J61B J61C J61D
L89.31	Prä	A46A A46C A46D A46E B61B B61D
	09	J02A J02B J03A J03B J04Z J60A J61A J61B J61C J61D
L89.32	Prä	A46A A46C A46D A46E B61B B61D
	09	J02A J02B J03A J03B J04Z J60A J61A J61B J61C J61D
L89.33	Prä	A46A A46C A46D A46E B61B B61D
	09	J02A J02B J03A J03B J04Z J60A J61A J61B J61C J61D
L89.34	Prä	A46A A46C A46D A46E B61B B61D
	09	J02A J02B J03A J03B J04Z J60A J61A J61B J61C J61D
L89.35	Prä	A46A A46C A46D A46E B61B B61D
	09	J02A J02B J03A J03B J04Z J60A J61A J61B J61C J61D
L89.36	Prä	A46A A46C A46D A46E B61B B61D
	09	J02A J02B J03A J03B J04Z J60A J61A J61B J61C J61D
L89.37	Prä	A46A A46C A46D A46E B61B B61D
	09	J02A J02B J03A J03B J04Z J60A J61A J61B J61C J61D
L89.38	Prä	A46A A46C A46D A46E B61B B61D
	09	J02A J02B J03A J03B J04Z J60A J61A J61B J61C J61D
L89.39	Prä	A46A A46C A46D A46E B61B B61D
	09	J02A J02B J03A J03B J04Z J60A J60B J61A J61B J61C J61D
L89.90	09	J02A J02B J03A J03B J04Z J60A J60B J61A J61B J61C J61D
L89.91	09	J02A J02B J03A J03B J04Z J60A J60B J61A J61B J61C J61D
L89.92	09	J02A J02B J03A J03B J04Z J60A J60B J61A J61B J61C J61D
L89.93	09	J02A J02B J03A J03B J04Z J60A J60B J61A J61B J61C J61D
L89.94	09	J02A J02B J03A J03B J04Z J60A J60B J61A J61B J61C J61D
L89.95	09	J02A J02B J03A J03B J04Z J60A J60B J61A J61B J61C J61D
L89.96	09	J02A J02B J03A J03B J04Z J60A J60B J61A J61B J61C J61D
L89.97	09	J02A J02B J03A J03B J04Z J60A J60B J61A J61B J61C J61D
L89.98	09	J02A J02B J03A J03B J04Z J60A J60B J61A J61B J61C J61D
L89.99	09	J02A J02B J03A J03B J04Z J60A J60B J61A J61B J61C J61D
L90.0	09	J67Z
L90.1	09	J67Z
L90.2	09	J67Z
L90.3	09	J67Z
L90.4	09	J67Z
L90.5	09	J67Z
L90.6	09	J67Z
L90.8	09	J67Z
L90.9	09	J67Z
L91.0	09	J67Z
L91.8	09	J67Z
	15	P65B P66B P66C P67A P67B P67C
L91.9	09	J67Z
L92.0	09	J61A J61B J61C J61D
L92.1	09	J67Z
L92.2	09	J67Z
L92.3	09	J67Z
L92.8	09	J67Z
L92.9	09	J67Z
L93.0	09	J61A J61B J61C J61D
L93.1	09	J61A J61B J61C J61D
L93.2	09	J61A J61B J61C J61D
L94.0	09	J61A J61B J61C J61D
L94.1	09	J61A J61B J61C J61D
L94.2	09	J61A J61B J61C J61D
L94.3	09	J67Z
L94.4	08	I66A I66B I66C
L94.5	09	J02A J02B J08Z J61A J61B
L94.6	18B	T64A T64B T64C
L94.8	09	J67Z
L94.9	09	J67Z
L95.0	09	J02A J02B J08Z J61A J61B
L95.1	09	J61A J61B J61C J61D
L95.8	09	J61A J61B J61C J61D
L95.9	09	J61A J61B J61C J61D
L97	09	J02A J02B J03A J03B J04Z J11A J60A J60B
L98.0	09	J64A J64B J64C J64D
L98.1	09	J61A J61B J61C J61D
L98.2	09	J61A J61B J61C J61D
L98.3	09	J02A J02B J03A J03B J64A J64B J64C J64D
L98.4	09	J02A J02B J03A J03B J60A J60B
L98.5	09	J67Z
L98.6	09	J67Z
L98.7	09	J67Z
L98.8	09	J67Z
L98.9	09	J67Z
L99.0	Prä	961Z
L99.8	Prä	961Z
L99.11	Prä	961Z
L99.12	Prä	961Z
L99.13	Prä	961Z
L99.14	Prä	961Z A93A A97A A97B A97C A97D
	17	R50A R60A R60B
L99.21	Prä	961Z
L99.22	Prä	961Z
L99.23	Prä	961Z A93A A97A A97B A97C A97D
	17	R50A R60A R60B R61A R61B R61C
M00.00	08	I02A I02B I02C I08A I08B I12A I12B I12C I13A I13B I76A I76B
	15	MSPNG SPNG
	Prä	B61B B61C B61D
M00.01	08	I02A I02B I02C I08A I08B I12A I12B I12C I13A I13B I76A I76B
	15	MSPNG SPNG
	Prä	B61B B61C B61D
M00.02	08	I02A I02B I02C I08A I08B I12A I12B I12C I13A I13B I76A I76B
	15	MSPNG SPNG
	Prä	B61B B61C B61D
M00.03	08	I02A I02B I02C I08A I08B I12A I12B I12C I13A I13B I76A I76B
	15	MSPNG SPNG
	Prä	B61B B61C B61D
M00.04	08	I02A I02B I02C I08A I08B I13A I13B I32A I32B I32C I32E I32F I76A I76B

DIAG

ICD	MDC	DRG
	15	MSPNG SPNG
M00.05	08	I02A I02B I02C
		I03A I03B I04A
		I04B I04C I08A
		I08B I12A I12B
		I12C I13A I13B
		I76A I76B
	15	MSPNG SPNG
	Prä	A95A A95B B61B
		B61C B61D
M00.06	08	I02A I02B I02C
		I04A I04B I04C
		I08A I08B I12A
		I12B I12C I13A
		I13B I76A I76B
	15	MSPNG SPNG
	Prä	A95A A95B B61B
		B61C B61D
M00.07	08	I02A I02B I02C
		I08A I08B I13A
		I13B I20C I76A
		I76B
	15	MSPNG SPNG
M00.08	08	I02A I02B I02C
		I08A I08B I13A
		I13B I76A I76B
	15	MSPNG SPNG
M00.09	08	I02A I02B I02C
		I08A I08B I13A
		I13B I76A I76B
	15	MSPNG SPNG
M00.10	08	I02A I02B I02C
		I08A I08B I12A
		I12B I12C I13A
		I13B I76A I76B
	15	MSPNG SPNG
	Prä	B61B B61C B61D
M00.11	08	I02A I02B I02C
		I08A I08B I12A
		I12B I12C I13A
		I13B I76A I76B
	15	MSPNG SPNG
	Prä	B61B B61C B61D
M00.12	08	I02A I02B I02C
		I08A I08B I12A
		I12B I12C I13A
		I13B I76A I76B
	15	MSPNG SPNG
	Prä	B61B B61C B61D
M00.13	08	I02A I02B I02C
		I08A I08B I12A
		I12B I12C I13A
		I13B I76A I76B
	15	MSPNG SPNG
	Prä	B61B B61C B61D
M00.14	08	I02A I02B I02C
		I08A I08B I13A
		I13B I32A I32B
		I32C I32E I32F
		I76A I76B
	15	MSPNG SPNG
M00.15	08	I02A I02B I02C
		I03A I03B I04A
		I04B I04C I08A
		I08B I12A I12B
		I12C I13A I13B
		I76A I76B
	15	MSPNG SPNG
	Prä	A95A A95B B61B
		B61C B61D
M00.16	08	I02A I02B I02C
		I04A I04B I04C
		I08A I08B I12A
		I12B I12C I13A
		I13B I76A I76B
	15	MSPNG SPNG
	Prä	A95A A95B B61B
		B61C B61D
M00.17	08	I02A I02B I02C
		I08A I08B I13A
		I13B I20C I76A
		I76B
	15	MSPNG SPNG
M00.18	08	I02A I02B I02C
		I08A I08B I13A
		I13B I76A I76B
	15	MSPNG SPNG
M00.19	08	I02A I02B I02C
		I08A I08B I13A
		I13B I76A I76B
	15	MSPNG SPNG
M00.20	08	I02A I02B I02C
		I08A I08B I12A
		I12B I12C I13A
		I13B I76A I76B
	15	MSPNG SPNG
	Prä	B61B B61C B61D
M00.21	08	I02A I02B I02C
		I08A I08B I12A
		I12B I12C I13A
		I13B I76A I76B
	15	MSPNG SPNG
	Prä	B61B B61C B61D
M00.22	08	I02A I02B I02C
		I08A I08B I12A
		I12B I12C I13A
		I13B I76A I76B
	15	MSPNG SPNG
	Prä	B61B B61C B61D
M00.23	08	I02A I02B I02C
		I08A I08B I12A
		I12B I12C I13A
		I13B I76A I76B
	15	MSPNG SPNG
	Prä	B61B B61C B61D
M00.24	08	I02A I02B I02C
		I08A I08B I13A
		I13B I32A I32B
		I32C I32E I32F
		I76A I76B
	15	MSPNG SPNG
M00.25	08	I02A I02B I02C
		I03A I03B I04A
		I04B I04C I08A
		I08B I12A I12B
		I12C I13A I13B
		I76A I76B
	15	MSPNG SPNG
	Prä	A95A A95B B61B
		B61C B61D
M00.26	08	I02A I02B I02C
		I04A I04B I04C
		I08A I08B I12A
		I12B I12C I13A
		I13B I76A I76B
	15	MSPNG SPNG
	Prä	A95A A95B B61B
		B61C B61D
M00.27	08	I02A I02B I02C
		I08A I08B I13A
		I13B I20C I76A
		I76B
	15	MSPNG SPNG
M00.28	08	I02A I02B I02C
		I08A I08B I13A
		I13B I76A I76B
	15	MSPNG SPNG
M00.29	08	I02A I02B I02C
		I08A I08B I13A
		I13B I76A I76B
	15	MSPNG SPNG
M00.80	08	I02A I02B I02C
		I08A I08B I12A
		I12B I12C I13A
		I13B I76A I76B
	15	MSPNG SPNG
	Prä	B61B B61C B61D
M00.81	08	I02A I02B I02C
		I08A I08B I12A
		I12B I12C I13A
		I13B I76A I76B
	15	MSPNG SPNG
	Prä	B61B B61C B61D
M00.82	08	I02A I02B I02C
		I08A I08B I12A
		I12B I12C I13A
		I13B I76A I76B
	15	MSPNG SPNG
	Prä	B61B B61C B61D
M00.83	08	I02A I02B I02C
		I08A I08B I12A
		I12B I12C I13A
		I13B I76A I76B
	15	MSPNG SPNG
	Prä	B61B B61C B61D
M00.84	08	I02A I02B I02C
		I08A I08B I13A
		I13B I32A I32B
		I32C I32E I32F
		I76A I76B
	15	MSPNG SPNG
M00.85	08	I02A I02B I02C
		I03A I03B I04A
		I04B I04C I08A
		I08B I12A I12B
		I12C I13A I13B
		I76A I76B
	15	MSPNG SPNG
	Prä	A95A A95B B61B
		B61C B61D
M00.86	08	I02A I02B I02C
		I04A I04B I04C
		I08A I08B I12A
		I12B I12C I13A
		I13B I76A I76B
	15	MSPNG SPNG
	Prä	A95A A95B B61B
		B61C B61D
M00.87	08	I02A I02B I02C
		I08A I08B I13A
		I13B I20C I76A
		I76B
	15	MSPNG SPNG
M00.88	08	I02A I02B I02C
		I08A I08B I13A
		I13B I76A I76B
	15	MSPNG SPNG
M00.89	08	I02A I02B I02C
		I08A I08B I13A
		I13B I76A I76B

ICD	MDC	DRG
	15	MSPNG SPNG
M00.90	Prä	B61B B61C B61D
	08	I02A I02B I02C
		I08A I08B I12A
		I12B I12C I13A
		I13B I76A I76B
M00.91	Prä	B61B B61C B61D
	08	I02A I02B I02C
		I08A I08B I12A
		I12B I12C I13A
		I13B I76A I76B
M00.92	Prä	B61B B61C B61D
	08	I02A I02B I02C
		I08A I08B I12A
		I12B I12C I13A
		I13B I76A I76B
M00.93	Prä	B61B B61C B61D
	08	I02A I02B I02C
		I08A I08B I12A
		I12B I12C I13A
		I13B I76A I76B
M00.94	08	I02A I02B I02C
		I08A I08B I13A
		I13B I32A I32B
		I32C I32E I32F
		I76A I76B
M00.95	Prä	A95A A95B B61B
		B61C B61D
	08	I02A I02B I02C
		I03A I03B I04A
		I04B I04C I08A
		I08B I12A I12B
		I12C I13A I13B
		I76A I76B
M00.96	Prä	A95A A95B B61B
		B61C B61D
	08	I02A I02B I02C
		I04A I04B I04C
		I08A I08B I12A
		I12B I12C I13A
		I13B I76A I76B
M00.97	08	I02A I02B I02C
		I08A I08B I13A
		I13B I20C I76A
		I76B
M00.98	08	I02A I02B I02C
		I08A I08B I13A
		I13B I76A I76B
M00.99	08	I02A I02B I02C
		I08A I08B I13A
		I13B I76A I76B
M01.00	15	MSPNG SPNG
	Prä	961Z
M01.01	15	MSPNG SPNG
	Prä	961Z
M01.02	15	MSPNG SPNG
	Prä	961Z
M01.03	15	MSPNG SPNG
	Prä	961Z
M01.04	15	MSPNG SPNG
	Prä	961Z
M01.05	15	MSPNG SPNG
	Prä	961Z
M01.06	15	MSPNG SPNG
	Prä	961Z
M01.07	15	MSPNG SPNG
	Prä	961Z
M01.08	15	MSPNG SPNG
	Prä	961Z
M01.09	15	MSPNG SPNG

ICD	MDC	DRG
	Prä	961Z
M01.10	15	MSPNG SPNG
	Prä	961Z
M01.11	15	MSPNG SPNG
	Prä	961Z
M01.12	15	MSPNG SPNG
	Prä	961Z
M01.13	15	MSPNG SPNG
	Prä	961Z
M01.14	15	MSPNG SPNG
	Prä	961Z
M01.15	15	MSPNG SPNG
	Prä	961Z
M01.16	15	MSPNG SPNG
	Prä	961Z
M01.17	15	MSPNG SPNG
	Prä	961Z
M01.18	15	MSPNG SPNG
	Prä	961Z
M01.19	15	MSPNG SPNG
	Prä	961Z
M01.20	Prä	961Z
M01.21	Prä	961Z
M01.22	Prä	961Z
M01.23	Prä	961Z
M01.24	Prä	961Z
M01.25	Prä	961Z
M01.26	Prä	961Z
M01.27	Prä	961Z
M01.28	Prä	961Z
M01.29	Prä	961Z
M01.30	15	MSPNG SPNG
	Prä	961Z
M01.31	15	MSPNG SPNG
	Prä	961Z
M01.32	15	MSPNG SPNG
	Prä	961Z
M01.33	15	MSPNG SPNG
	Prä	961Z
M01.34	15	MSPNG SPNG
	Prä	961Z
M01.35	15	MSPNG SPNG
	Prä	961Z
M01.36	15	MSPNG SPNG
	Prä	961Z
M01.37	15	MSPNG SPNG
	Prä	961Z
M01.38	15	MSPNG SPNG
	Prä	961Z
M01.39	15	MSPNG SPNG
	Prä	961Z
M01.40	15	MSPNG SPNG
	Prä	961Z
M01.41	15	MSPNG SPNG
	Prä	961Z
M01.42	15	MSPNG SPNG
	Prä	961Z
M01.43	15	MSPNG SPNG
	Prä	961Z
M01.44	15	MSPNG SPNG
	Prä	961Z
M01.45	15	MSPNG SPNG
	Prä	961Z
M01.46	15	MSPNG SPNG
	Prä	961Z
M01.47	15	MSPNG SPNG
	Prä	961Z
M01.48	15	MSPNG SPNG
	Prä	961Z
M01.49	15	MSPNG SPNG

ICD	MDC	DRG
	Prä	961Z
M01.50	Prä	961Z
M01.51	Prä	961Z
M01.52	Prä	961Z
M01.53	Prä	961Z
M01.54	Prä	961Z
M01.55	Prä	961Z
M01.56	Prä	961Z
M01.57	Prä	961Z
M01.58	Prä	961Z
M01.59	Prä	961Z
M01.60	15	MSPNG SPNG
	Prä	961Z
M01.61	15	MSPNG SPNG
	Prä	961Z
M01.62	15	MSPNG SPNG
	Prä	961Z
M01.63	15	MSPNG SPNG
	Prä	961Z
M01.64	15	MSPNG SPNG
	Prä	961Z
M01.65	15	MSPNG SPNG
	Prä	961Z
M01.66	15	MSPNG SPNG
	Prä	961Z
M01.67	15	MSPNG SPNG
	Prä	961Z
M01.68	15	MSPNG SPNG
	Prä	961Z
M01.69	15	MSPNG SPNG
	Prä	961Z
M01.80	Prä	961Z
M01.81	Prä	961Z
M01.82	Prä	961Z
M01.83	Prä	961Z
M01.84	Prä	961Z
M01.85	Prä	961Z
M01.86	Prä	961Z
M01.87	Prä	961Z
M01.88	Prä	961Z
M01.89	Prä	961Z
M02.00	08	I69A I69B I69C
M02.01	08	I69A I69B I69C
M02.02	08	I69A I69B I69C
M02.03	08	I69A I69B I69C
M02.04	08	I02A I02B I02C
		I32A I32B I32C
		I32D I32E I32F
		I69A I69B I69C
M02.05	08	I69A I69B I69C
M02.06	08	I69A I69B I69C
M02.07	08	I69A I69B I69C
M02.08	08	I69A I69B I69C
M02.09	08	I69A I69B I69C
M02.10	Prä	B61B B61C B61D
	08	I02A I02B I02C
		I08A I08B I12A
		I12B I12C I13A
		I13B I69A I69B
		I69C
M02.11	Prä	B61B B61C B61D
	08	I02A I02B I02C
		I08A I08B I12A
		I12B I12C I13A
		I13B I69A I69B
		I69C
M02.12	Prä	B61B B61C B61D
	08	I02A I02B I02C
		I08A I08B I12A
		I12B I12C I13A

DIAG

ICD	MDC	DRG
		I13B I69A I69B
		I69C
M02.13	Prä	B61B B61C B61D
	08	I02A I02B I02C
		I08A I08B I12A
		I12B I12C I13A
		I13B I69A I69B
		I69C
M02.14	08	I02A I02B I02C
		I08A I08B I13A
		I13B I32A I32B
		I32C I32D I32E
		I32F I69A I69B
		I69C
M02.15	Prä	B61B B61C B61D
	08	I02A I02B I02C
		I08A I08B I12A
		I12B I12C I13A
		I13B I69A I69B
		I69C
M02.16	Prä	B61B B61C B61D
	08	I02A I02B I02C
		I08A I08B I12A
		I12B I12C I13A
		I13B I69A I69B
		I69C
M02.17	08	I02A I02B I02C
		I08A I08B I13A
		I13B I69A I69B
		I69C
M02.18	08	I02A I02B I02C
		I08A I08B I13A
		I13B I69A I69B
		I69C
M02.19	08	I02A I02B I02C
		I08A I08B I13A
		I13B I69A I69B
		I69C
M02.20	08	I69A I69B I69C
M02.21	08	I69A I69B I69C
M02.22	08	I69A I69B I69C
M02.23	08	I69A I69B I69C
M02.24	08	I02A I02B I02C
		I32A I32B I32C
		I32D I32E I32F
		I69A I69B I69C
M02.25	08	I69A I69B I69C
M02.26	08	I69A I69B I69C
M02.27	08	I69A I69B I69C
M02.28	08	I69A I69B I69C
M02.29	08	I69A I69B I69C
M02.30	Prä	B61B B61C B61D
	02	C60A C61A
	05	F62A
	08	I02A I02B I02C
		I08A I08B I12A
		I12B I12C I13A
		I13B I66A I66B
		I66C
M02.31	Prä	B61B B61C B61D
	02	C60A C61A
	05	F62A
	08	I02A I02B I02C
		I08A I08B I12A
		I12B I12C I13A
		I13B I66A I66B
		I66C
M02.32	Prä	B61B B61C B61D
	02	C60A C61A
	05	F62A
	08	I02A I02B I02C
		I08A I08B I12A
		I12B I12C I13A
		I13B I66A I66B
		I66C
M02.33	Prä	B61B B61C B61D
	02	C60A C61A
	05	F62A
	08	I02A I02B I02C
		I08A I08B I12A
		I12B I12C I13A
		I13B I66A I66B
		I66C
M02.34	02	C60A C61A
	05	F62A
	08	I02A I02B I02C
		I08A I08B I13A
		I13B I32A I32B
		I32C I32D I32E
		I32F I66A I66B
		I66C
M02.35	Prä	B61B B61C B61D
	02	C60A C61A
	05	F62A
	08	I02A I02B I02C
		I08A I08B I12A
		I12B I12C I13A
		I13B I66A I66B
		I66C
M02.36	Prä	B61B B61C B61D
	02	C60A C61A
	05	F62A
	08	I02A I02B I02C
		I08A I08B I12A
		I12B I12C I13A
		I13B I66A I66B
		I66C
M02.37	02	C60A C61A
	05	F62A
	08	I02A I02B I02C
		I08A I08B I13A
		I13B I66A I66B
		I66C
M02.38	02	C60A C61A
	05	F62A
	08	I02A I02B I02C
		I08A I08B I13A
		I13B I66A I66B
		I66C
M02.39	02	C60A C61A
	05	F62A
	08	I02A I02B I02C
		I08A I08B I13A
		I13B I66A I66B
		I66C
M02.80	08	I69A I69B I69C
M02.81	08	I69A I69B I69C
M02.82	08	I69A I69B I69C
M02.83	08	I69A I69B I69C
M02.84	08	I02A I02B I02C
		I32A I32B I32C
		I32D I32E I32F
		I69A I69B I69C
M02.85	08	I69A I69B I69C
M02.86	08	I69A I69B I69C
M02.87	08	I69A I69B I69C
M02.88	08	I69A I69B I69C
M02.89	08	I69A I69B I69C
M02.90	Prä	B61B B61C B61D
	02	C60A C61A
	05	F62A
	08	I02A I02B I02C
		I08A I08B I12A
		I12B I12C I13A
		I13B I69A I69B
		I69C
M02.91	Prä	B61B B61C B61D
	02	C60A C61A
	05	F62A
	08	I02A I02B I02C
		I08A I08B I12A
		I12B I12C I13A
		I13B I69A I69B
		I69C
M02.92	Prä	B61B B61C B61D
	02	C60A C61A
	05	F62A
	08	I02A I02B I02C
		I08A I08B I12A
		I12B I12C I13A
		I13B I69A I69B
		I69C
M02.93	Prä	B61B B61C B61D
	02	C60A C61A
	05	F62A
	08	I02A I02B I02C
		I08A I08B I12A
		I12B I12C I13A
		I13B I69A I69B
		I69C
M02.94	02	C60A C61A
	05	F62A
	08	I02A I02B I02C
		I08A I08B I13A
		I13B I32A I32B
		I32C I32D I32E
		I32F I69A I69B
		I69C
M02.95	Prä	B61B B61C B61D
	02	C60A C61A
	05	F62A
	08	I02A I02B I02C
		I08A I08B I12A
		I12B I12C I13A
		I13B I69A I69B
		I69C
M02.96	Prä	B61B B61C B61D
	02	C60A C61A
	05	F62A
	08	I02A I02B I02C
		I08A I08B I12A
		I12B I12C I13A
		I13B I69A I69B
		I69C
M02.97	02	C60A C61A
	05	F62A
	08	I02A I02B I02C
		I08A I08B I13A
		I13B I69A I69B
		I69C
M02.98	02	C60A C61A
	05	F62A
	08	I02A I02B I02C
		I08A I08B I13A
		I13B I69A I69B
		I69C
M02.99	02	C60A C61A
	05	F62A
	08	I02A I02B I02C
		I08A I08B I13A

ICD	MDC	DRG
		I13B I69A I69B
		I69C
M03.00		KP KPP
	05	F62A
	17	R50A R60A R60B
		R60C R60D R62A
		R62B R63A R63B
		R63C R63D
	18B	T61A
	Prä	961Z A93A A97A
		A97B A97C A97D
M03.01		KP KPP
	05	F62A
	17	R50A R60A R60B
		R60C R60D R62A
		R62B R63A R63B
		R63C R63D
	18B	T61A
	Prä	961Z A93A A97A
		A97B A97C A97D
M03.02		KP KPP
	05	F62A
	17	R50A R60A R60B
		R60C R60D R62A
		R62B R63A R63B
		R63C R63D
	18B	T61A
	Prä	961Z A93A A97A
		A97B A97C A97D
M03.03		KP KPP
	05	F62A
	17	R50A R60A R60B
		R60C R60D R62A
		R62B R63A R63B
		R63C R63D
	18B	T61A
	Prä	961Z A93A A97A
		A97B A97C A97D
M03.04		KP KPP
	05	F62A
	17	R50A R60A R60B
		R60C R60D R62A
		R62B R63A R63B
		R63C R63D
	18B	T61A
	Prä	961Z A93A A97A
		A97B A97C A97D
M03.05		KP KPP
	05	F62A
	17	R50A R60A R60B
		R60C R60D R62A
		R62B R63A R63B
		R63C R63D
	18B	T61A
	Prä	961Z A93A A97A
		A97B A97C A97D
M03.06		KP KPP
	05	F62A
	17	R50A R60A R60B
		R60C R60D R62A
		R62B R63A R63B
		R63C R63D
	18B	T61A
	Prä	961Z A93A A97A
		A97B A97C A97D
M03.07		KP KPP
	05	F62A
	17	R50A R60A R60B
		R60C R60D R62A
		R62B R63A R63B
		R63C R63D
	18B	T61A
	Prä	961Z A93A A97A
		A97B A97C A97D
M03.08		KP KPP
	05	F62A
	17	R50A R60A R60B
		R60C R60D R62A
		R62B R63A R63B
		R63C R63D
	18B	T61A
	Prä	961Z A93A A97A
		A97B A97C A97D
M03.09	Prä	961Z A93A A97A
		A97B A97C A97D
	05	F62A
	17	R50A R60A R60B
		R60C R60D R62A
		R62B R63A R63B
		R63C R63D
	18B	T61A
M03.10	Prä	961Z
M03.11	Prä	961Z
M03.12	Prä	961Z
M03.13	Prä	961Z
M03.14	Prä	961Z
M03.15	Prä	961Z
M03.16	Prä	961Z
M03.17	Prä	961Z
M03.18	Prä	961Z
M03.19	Prä	961Z
M03.20	Prä	961Z
M03.21	Prä	961Z
M03.22	Prä	961Z
M03.23	Prä	961Z
M03.24	Prä	961Z
M03.25	Prä	961Z
M03.26	Prä	961Z
M03.27	Prä	961Z
M03.28	Prä	961Z
M03.29	Prä	961Z
M03.60	Prä	961Z
M03.61	Prä	961Z
M03.62	Prä	961Z
M03.63	Prä	961Z
M03.64	Prä	961Z
M03.65	Prä	961Z
M03.66	Prä	961Z
M03.67	Prä	961Z
M03.68	Prä	961Z
M03.69	Prä	961Z
M05.00	Prä	B61B B61C B61D
	08	I02A I02B I02C
		I08A I08B I12A
		I12B I12C I13A
		I13B I20A I20C
		I20D I66A I66B
		I66C
M05.01	Prä	B61B B61C B61D
	08	I02A I02B I02C
		I08A I08B I12A
		I12B I12C I13A
		I13B I66A I66B
		I66C
M05.02	Prä	B61B B61C B61D
	08	I02A I02B I02C
		I08A I08B I12A
		I12B I12C I13A
		I13B I66A I66B
		I66C
M05.03	Prä	B61B B61C B61D
	08	I02A I02B I02C
		I08A I08B I12A
		I12B I12C I13A
		I13B I66A I66B
		I66C
M05.04	08	I02A I02B I02C
		I08A I08B I13A
		I13B I32C I66A
		I66B I66C
M05.05	Prä	B61B B61C B61D
	08	I02A I02B I02C
		I08A I08B I12A
		I12B I12C I13A
		I13B I66A I66B
		I66C
M05.06	Prä	B61B B61C B61D
	08	I02A I02B I02C
		I08A I08B I12A
		I12B I12C I13A
		I13B I66A I66B
		I66C
M05.07	08	I02A I02B I02C
		I08A I08B I13A
		I13B I20A I20C
		I20D I66A I66B
		I66C
M05.08	08	I02A I02B I02C
		I08A I08B I13A
		I13B I66A I66B
		I66C
M05.09	08	I02A I02B I02C
		I08A I08B I13A
		I13B I66A I66B
		I66C
M05.10	04	E60A E60B E74Z
	08	I20D
M05.11	04	E60A E60B E74Z
M05.12	04	E60A E60B E74Z
M05.13	04	E60A E60B E74Z
M05.14	04	E60A E60B E74Z
	08	I32C
M05.15	04	E60A E60B E74Z
M05.16	04	E60A E60B E74Z
M05.17	04	E60A E60B E74Z
	08	I20D
M05.18	04	E60A E60B E74Z
M05.19	04	E60A E60B E74Z
M05.20	Prä	B61B B61C B61D
	08	I02A I02B I02C
		I08A I08B I12A
		I12B I12C I13A
		I13B I20D I66A
		I66B I66C
M05.21	Prä	B61B B61C B61D
	08	I02A I02B I02C
		I08A I08B I12A
		I12B I12C I13A
		I13B I66A I66B
		I66C
M05.22	Prä	B61B B61C B61D
	08	I02A I02B I02C
		I08A I08B I12A
		I12B I12C I13A
		I13B I66A I66B
		I66C
M05.23	Prä	B61B B61C B61D
	08	I02A I02B I02C
		I08A I08B I12A
		I12B I12C I13A

DIAG

ICD	MDC	DRG
		I13B I66A I66B I66C
M05.24	08	I02A I02B I02C I08A I08B I13A I13B I32C I66A I66B I66C
M05.25	Prä 08	B61B B61C B61D I02A I02B I02C I08A I08B I12A I12B I12C I13A I13B I66A I66B I66C
M05.26	Prä 08	B61B B61C B61D I02A I02B I02C I08A I08B I12A I12B I12C I13A I13B I66A I66B I66C
M05.27	08	I02A I02B I02C I08A I08B I13A I13B I20D I66A I66B I66C
M05.28	08	I02A I02B I02C I08A I08B I13A I13B I66A I66B I66C
M05.29	08	I02A I02B I02C I08A I08B I13A I13B I66A I66B I66C
M05.30	Prä 08	B61B B61C B61D I02A I02B I02C I08A I08B I12A I12B I12C I13A I13B I20A I20C I20D I66A I66B I66C
M05.31	Prä 08	B61B B61C B61D I02A I02B I02C I08A I08B I12A I12B I12C I13A I13B I66A I66B I66C
M05.32	Prä 08	B61B B61C B61D I02A I02B I02C I08A I08B I12A I12B I12C I13A I13B I66A I66B I66C
M05.33	Prä 08	B61B B61C B61D I02A I02B I02C I08A I08B I12A I12B I12C I13A I13B I66A I66B I66C
M05.34	08	I02A I02B I02C I08A I08B I13A I13B I32C I66A I66B I66C
M05.35	Prä 08	B61B B61C B61D I02A I02B I02C I08A I08B I12A I12B I12C I13A I13B I66A I66B I66C
M05.36	Prä 08	B61B B61C B61D I02A I02B I02C I08A I08B I12A I12B I12C I13A I13B I66A I66B
		I66C
M05.37	08	I02A I02B I02C I08A I08B I13A I13B I20A I20C I20D I66A I66B I66C
M05.38	08	I02A I02B I02C I08A I08B I13A I13B I66A I66B I66C
M05.39	08	I02A I02B I02C I08A I08B I13A I13B I66A I66B I66C
M05.80	Prä 08	B61B B61C B61D I02A I02B I02C I08A I08B I12A I12B I12C I13A I13B I20A I20C I20D I69A I69B I69C
M05.81	Prä 08	B61B B61C B61D I02A I02B I02C I08A I08B I12A I12B I12C I13A I13B I69A I69B I69C
M05.82	Prä 08	B61B B61C B61D I02A I02B I02C I08A I08B I12A I12B I12C I13A I13B I69A I69B I69C
M05.83	Prä 08	B61B B61C B61D I02A I02B I02C I08A I08B I12A I12B I12C I13A I13B I69A I69B I69C
M05.84	08	I02A I02B I02C I08A I08B I13A I13B I32C I69A I69B I69C
M05.85	Prä 08	B61B B61C B61D I02A I02B I02C I08A I08B I12A I12B I12C I13A I13B I69A I69B I69C
M05.86	Prä 08	B61B B61C B61D I02A I02B I02C I08A I08B I12A I12B I12C I13A I13B I69A I69B I69C
M05.87	08	I02A I02B I02C I08A I08B I13A I13B I20A I20C I20D I69A I69B I69C
M05.88	08	I02A I02B I02C I08A I08B I13A I13B I69A I69B I69C
M05.89	08	I02A I02B I02C I08A I08B I13A I13B I69A I69B I69C
M05.90	Prä 08	B61B B61C B61D I02A I02B I02C I08A I08B I12A I12B I12C I13A I13B I20A I20C I20D I69A I69B I69C
M05.91	Prä 08	B61B B61C B61D I02A I02B I02C I08A I08B I12A I12B I12C I13A I13B I69A I69B I69C
M05.92	Prä 08	B61B B61C B61D I02A I02B I02C I08A I08B I12A I12B I12C I13A I13B I69A I69B I69C
M05.93	Prä 08	B61B B61C B61D I02A I02B I02C I08A I08B I12A I12B I12C I13A I13B I69A I69B I69C
M05.94	08	I02A I02B I02C I08A I08B I13A I13B I32C I69A I69B I69C
M05.95	Prä 08	B61B B61C B61D I02A I02B I02C I08A I08B I12A I12B I12C I13A I13B I69A I69B I69C
M05.96	Prä 08	B61B B61C B61D I02A I02B I02C I08A I08B I12A I12B I12C I13A I13B I69A I69B I69C
M05.97	08	I02A I02B I02C I08A I08B I13A I13B I20A I20C I20D I69A I69B I69C
M05.98	08	I02A I02B I02C I08A I08B I13A I13B I69A I69B I69C
M05.99	08	I02A I02B I02C I08A I08B I13A I13B I69A I69B I69C
M06.00	Prä 08	B61B B61C B61D I02A I02B I02C I08A I08B I12A I12B I12C I13A I13B I20A I20C I20D I69A I69B I69C
M06.01	Prä 08	B61B B61C B61D I02A I02B I02C I08A I08B I12A I12B I12C I13A I13B I69A I69B I69C
M06.02	Prä 08	B61B B61C B61D I02A I02B I02C I08A I08B I12A I12B I12C I13A I13B I69A I69B

ICD	MDC	DRG
		I69C
M06.03	Prä	B61B B61C B61D
	08	I02A I02B I02C
		I08A I08B I12A
		I12B I12C I13A
		I13B I69A I69B
		I69C
M06.04	08	I02A I02B I02C
		I08A I08B I13A
		I13B I32C I69A
		I69B I69C
M06.05	Prä	B61B B61C B61D
	08	I02A I02B I02C
		I08A I08B I12A
		I12B I12C I13A
		I13B I69A I69B
		I69C
M06.06	Prä	B61B B61C B61D
	08	I02A I02B I02C
		I08A I08B I12A
		I12B I12C I13A
		I13B I69A I69B
		I69C
M06.07	08	I02A I02B I02C
		I08A I08B I13A
		I13B I20A I20C
		I20D I69A I69B
		I69C
M06.08	08	I02A I02B I02C
		I08A I08B I13A
		I13B I69A I69B
		I69C
M06.09	08	I02A I02B I02C
		I08A I08B I13A
		I13B I69A I69B
		I69C
M06.10	Prä	B61B B61C B61D
	08	I02A I02B I02C
		I08A I08B I12A
		I12B I12C I13A
		I13B I20A I20C
		I20D I66A I66B
		I66C
M06.11	Prä	B61B B61C B61D
	08	I02A I02B I02C
		I08A I08B I12A
		I12B I12C I13A
		I13B I66A I66B
		I66C
M06.12	Prä	B61B B61C B61D
	08	I02A I02B I02C
		I08A I08B I12A
		I12B I12C I13A
		I13B I66A I66B
		I66C
M06.13	Prä	B61B B61C B61D
	08	I02A I02B I02C
		I08A I08B I12A
		I12B I12C I13A
		I13B I66A I66B
		I66C
M06.14	08	I02A I02B I02C
		I08A I08B I13A
		I13B I32C I66A
		I66B I66C
M06.15	Prä	B61B B61C B61D
	08	I02A I02B I02C
		I08A I08B I12A
		I12B I12C I13A
		I13B I66A I66B
		I66C
M06.16	Prä	B61B B61C B61D
	08	I02A I02B I02C
		I08A I08B I12A
		I12B I12C I13A
		I13B I66A I66B
		I66C
M06.17	08	I02A I02B I02C
		I08A I08B I13A
		I13B I20A I20C
		I20D I66A I66B
		I66C
M06.18	08	I02A I02B I02C
		I08A I08B I13A
		I13B I66A I66B
		I66C
M06.19	08	I02A I02B I02C
		I08A I08B I13A
		I13B I66A I66B
		I66C
M06.20	Prä	B61B B61C B61D
	08	I02A I02B I02C
		I08A I08B I12A
		I12B I12C I13A
		I13B I20D I69A
		I69B I69C
M06.21	Prä	B61B B61C B61D
	08	I02A I02B I02C
		I08A I08B I12A
		I12B I12C I13A
		I13B I69A I69B
		I69C
M06.22	Prä	B61B B61C B61D
	08	I02A I02B I02C
		I08A I08B I12A
		I12B I12C I13A
		I13B I69A I69B
		I69C
M06.23	Prä	B61B B61C B61D
	08	I02A I02B I02C
		I08A I08B I12A
		I12B I12C I13A
		I13B I69A I69B
		I69C
M06.24	08	I02A I02B I02C
		I08A I08B I13A
		I13B I32C I69A
		I69B I69C
M06.25	Prä	B61B B61C B61D
	08	I02A I02B I02C
		I08A I08B I12A
		I12B I12C I13A
		I13B I69A I69B
		I69C
M06.26	Prä	B61B B61C B61D
	08	I02A I02B I02C
		I08A I08B I12A
		I12B I12C I13A
		I13B I69A I69B
		I69C
M06.27	08	I02A I02B I02C
		I08A I08B I13A
		I13B I20D I69A
		I69B I69C
M06.28	08	I02A I02B I02C
		I08A I08B I13A
		I13B I69A I69B
		I69C
M06.29	08	I02A I02B I02C
		I08A I08B I13A
		I13B I69A I69B
		I69C
M06.30	Prä	B61B B61C B61D
	08	I02A I02B I02C
		I08A I08B I12A
		I12B I12C I13A
		I13B I20D I66A
		I66B I66C
M06.31	Prä	B61B B61C B61D
	08	I02A I02B I02C
		I08A I08B I12A
		I12B I12C I13A
		I13B I66A I66B
		I66C
M06.32	Prä	B61B B61C B61D
	08	I02A I02B I02C
		I08A I08B I12A
		I12B I12C I13A
		I13B I66A I66B
		I66C
M06.33	Prä	B61B B61C B61D
	08	I02A I02B I02C
		I08A I08B I12A
		I12B I12C I13A
		I13B I66A I66B
		I66C
M06.34	08	I02A I02B I02C
		I08A I08B I13A
		I13B I32C I66A
		I66B I66C
M06.35	Prä	B61B B61C B61D
	08	I02A I02B I02C
		I08A I08B I12A
		I12B I12C I13A
		I13B I66A I66B
		I66C
M06.36	Prä	B61B B61C B61D
	08	I02A I02B I02C
		I08A I08B I12A
		I12B I12C I13A
		I13B I66A I66B
		I66C
M06.37	08	I02A I02B I02C
		I08A I08B I13A
		I13B I20D I66A
		I66B I66C
M06.38	08	I02A I02B I02C
		I08A I08B I13A
		I13B I66A I66B
		I66C
M06.39	08	I02A I02B I02C
		I08A I08B I13A
		I13B I66A I66B
		I66C
M06.40	Prä	B61B B61C B61D
	08	I02A I02B I02C
		I08A I08B I12A
		I12B I12C I13A
		I13B I20A I20C
		I20D I69A I69B
		I69C
M06.41	Prä	B61B B61C B61D
	08	I02A I02B I02C
		I08A I08B I12A
		I12B I12C I13A
		I13B I69A I69B
		I69C
M06.42	Prä	B61B B61C B61D
	08	I02A I02B I02C
		I08A I08B I12A

DIAG

ICD	MDC	DRG
		I12B I12C I13A
		I13B I69A I69B
		I69C
M06.43	Prä	B61B B61C B61D
	08	I02A I02B I02C
		I08A I08B I12A
		I12B I12C I13A
		I13B I69A I69B
		I69C
M06.44	08	I02A I02B I02C
		I08A I08B I13A
		I13B I32C I69A
		I69B I69C
M06.45	Prä	B61B B61C B61D
	08	I02A I02B I02C
		I08A I08B I12A
		I12B I12C I13A
		I13B I69A I69B
		I69C
M06.46	Prä	B61B B61C B61D
	08	I02A I02B I02C
		I08A I08B I12A
		I12B I12C I13A
		I13B I69A I69B
		I69C
M06.47	08	I02A I02B I02C
		I08A I08B I13A
		I13B I20A I20C
		I20D I69A I69B
		I69C
M06.48	08	I02A I02B I02C
		I08A I08B I13A
		I13B I69A I69B
		I69C
M06.49	08	I02A I02B I02C
		I08A I08B I13A
		I13B I69A I69B
		I69C
M06.80	Prä	B61B B61C B61D
	08	I02A I02B I02C
		I08A I08B I12A
		I12B I12C I13A
		I13B I20A I20C
		I20D I69A I69B
		I69C
M06.81	Prä	B61B B61C B61D
	08	I02A I02B I02C
		I08A I08B I12A
		I12B I12C I13A
		I13B I69A I69B
		I69C
M06.82	Prä	B61B B61C B61D
	08	I02A I02B I02C
		I08A I08B I12A
		I12B I12C I13A
		I13B I69A I69B
		I69C
M06.83	Prä	B61B B61C B61D
	08	I02A I02B I02C
		I08A I08B I12A
		I12B I12C I13A
		I13B I69A I69B
		I69C
M06.84	08	I02A I02B I02C
		I08A I08B I13A
		I13B I32C I69A
		I69B I69C
M06.85	Prä	B61B B61C B61D
	08	I02A I02B I02C
		I08A I08B I12A
		I12B I12C I13A
		I13B I69A I69B
		I69C
M06.86	Prä	B61B B61C B61D
	08	I02A I02B I02C
		I08A I08B I12A
		I12B I12C I13A
		I13B I69A I69B
		I69C
M06.87	08	I02A I02B I02C
		I08A I08B I13A
		I13B I20A I20C
		I20D I69A I69B
		I69C
M06.88	08	I02A I02B I02C
		I08A I08B I13A
		I13B I69A I69B
		I69C
M06.89	08	I02A I02B I02C
		I08A I08B I13A
		I13B I69A I69B
		I69C
M06.90	Prä	B61B B61C B61D
	02	C60A C61A
	05	F62A
	08	I02A I02B I02C
		I08A I08B I12A
		I12B I12C I13A
		I13B I20A I20C
		I20D I69A I69B
		I69C
M06.91	Prä	B61B B61C B61D
	02	C60A C61A
	05	F62A
	08	I02A I02B I02C
		I08A I08B I12A
		I12B I12C I13A
		I13B I69A I69B
		I69C
M06.92	Prä	B61B B61C B61D
	02	C60A C61A
	05	F62A
	08	I02A I02B I02C
		I08A I08B I12A
		I12B I12C I13A
		I13B I69A I69B
		I69C
M06.93	Prä	B61B B61C B61D
	02	C60A C61A
	05	F62A
	08	I02A I02B I02C
		I08A I08B I12A
		I12B I12C I13A
		I13B I69A I69B
		I69C
M06.94	02	C60A C61A
	05	F62A
	08	I02A I02B I02C
		I08A I08B I13A
		I13B I32C I69A
		I69B I69C
M06.95	Prä	B61B B61C B61D
	02	C60A C61A
	05	F62A
	08	I02A I02B I02C
		I08A I08B I12A
		I12B I12C I13A
		I13B I69A I69B
		I69C
M06.96	Prä	B61B B61C B61D
	02	C60A C61A
	05	F62A
	08	I02A I02B I02C
		I08A I08B I12A
		I12B I12C I13A
		I13B I69A I69B
		I69C
M06.97	02	C60A C61A
	05	F62A
	08	I02A I02B I02C
		I08A I08B I13A
		I13B I20A I20C
		I20D I69A I69B
		I69C
M06.98	02	C60A C61A
	05	F62A
	08	I02A I02B I02C
		I08A I08B I13A
		I13B I69A I69B
		I69C
M06.99	02	C60A C61A
	05	F62A
	08	I02A I02B I02C
		I08A I08B I13A
		I13B I69A I69B
		I69C
M07.00	Prä	961Z
	08	I20A I20C
M07.2	Prä	961Z
M07.04	Prä	961Z
M07.07	Prä	961Z
	08	I20A I20C
M07.09	Prä	961Z
M07.10	Prä	961Z
	08	I20A I20C
M07.11	Prä	961Z
M07.12	Prä	961Z
M07.13	Prä	961Z
M07.14	Prä	961Z
M07.15	Prä	961Z
M07.16	Prä	961Z
M07.17	Prä	961Z
	08	I20A I20C
M07.18	Prä	961Z
M07.19	Prä	961Z
M07.30	Prä	961Z
	02	C60A C61A
	05	F62A
	08	I20A I20C
M07.31	Prä	961Z
	02	C60A C61A
	05	F62A
M07.32	Prä	961Z
	02	C60A C61A
	05	F62A
M07.33	Prä	961Z
	02	C60A C61A
	05	F62A
M07.34	Prä	961Z
	02	C60A C61A
	05	F62A
M07.35	Prä	961Z
	02	C60A C61A
	05	F62A
M07.36	Prä	961Z
	02	C60A C61A
	05	F62A
M07.37	Prä	961Z
	02	C60A C61A
	05	F62A

ICD	MDC	DRG
	08	I20A I20C
M07.38	Prä	961Z
	02	C60A C61A
	05	F62A
M07.39	Prä	961Z
	02	C60A C61A
	05	F62A
M07.40	Prä	961Z
	08	I20A I20C
M07.41	Prä	961Z
M07.42	Prä	961Z
M07.43	Prä	961Z
M07.44	Prä	961Z
M07.45	Prä	961Z
M07.46	Prä	961Z
M07.47	Prä	961Z
	08	I20A I20C
M07.48	Prä	961Z
M07.49	Prä	961Z
M07.50	Prä	961Z
	08	I20A I20C
M07.51	Prä	961Z
M07.52	Prä	961Z
M07.53	Prä	961Z
M07.54	Prä	961Z
M07.55	Prä	961Z
M07.56	Prä	961Z
M07.57	Prä	961Z
	08	I20A I20C
M07.58	Prä	961Z
M07.59	Prä	961Z
M07.60	Prä	961Z
	08	I20A I20C
M07.61	Prä	961Z
M07.62	Prä	961Z
M07.63	Prä	961Z
M07.64	Prä	961Z
M07.65	Prä	961Z
M07.66	Prä	961Z
M07.67	Prä	961Z
	08	I20A I20C
M07.68	Prä	961Z
M07.69	Prä	961Z
M08.00	Prä	B61B B61C B61D
	08	I02A I02B I02C
		I08A I08B I12A
		I12B I12C I13A
		I13B I20A I20C
		I66A I66B I66C
M08.01	Prä	B61B B61C B61D
	08	I02A I02B I02C
		I08A I08B I12A
		I12B I12C I13A
		I13B I66A I66B
		I66C
M08.02	Prä	B61B B61C B61D
	08	I02A I02B I02C
		I08A I08B I12A
		I12B I12C I13A
		I13B I66A I66B
		I66C
M08.03	Prä	B61B B61C B61D
	08	I02A I02B I02C
		I08A I08B I12A
		I12B I12C I13A
		I13B I66A I66B
		I66C
M08.3	Prä	B61B B61C B61D
	08	I02A I02B I02C
		I08A I08B I12A
		I12B I12C I13A
		I13B I20A I20C
		I66A I66B I66C
M08.04	08	I02A I02B I02C
		I08A I08B I13A
		I13B I66A I66B
		I66C
M08.05	Prä	B61B B61C B61D
	08	I02A I02B I02C
		I08A I08B I12A
		I12B I12C I13A
		I13B I66A I66B
		I66C
M08.06	Prä	B61B B61C B61D
	08	I02A I02B I02C
		I08A I08B I12A
		I12B I12C I13A
		I13B I66A I66B
		I66C
M08.07	08	I02A I02B I02C
		I08A I08B I13A
		I13B I20A I20C
		I66A I66B I66C
M08.08	08	I02A I02B I02C
		I08A I08B I13A
		I13B I66A I66B
		I66C
M08.09	08	I02A I02B I02C
		I08A I08B I13A
		I13B I66A I66B
		I66C
M08.10	08	I20A I20C I66A
		I66B I66C
M08.11	08	I66A I66B I66C
M08.12	08	I66A I66B I66C
M08.13	08	I66A I66B I66C
M08.14	08	I66A I66B I66C
M08.15	08	I66A I66B I66C
M08.16	08	I66A I66B I66C
M08.17	08	I20A I20C I66A
		I66B I66C
M08.18	08	I66A I66B I66C
M08.19	08	I66A I66B I66C
M08.20	Prä	B61B B61C B61D
	08	I02A I02B I02C
		I08A I08B I12A
		I12B I12C I13A
		I13B I20A I20C
		I66A I66B I66C
M08.21	Prä	B61B B61C B61D
	08	I02A I02B I02C
		I08A I08B I12A
		I12B I12C I13A
		I13B I66A I66B
		I66C
M08.22	Prä	B61B B61C B61D
	08	I02A I02B I02C
		I08A I08B I12A
		I12B I12C I13A
		I13B I66A I66B
		I66C
M08.23	Prä	B61B B61C B61D
	08	I02A I02B I02C
		I08A I08B I12A
		I12B I12C I13A
		I13B I66A I66B
		I66C
M08.24	08	I02A I02B I02C
		I08A I08B I13A
		I13B I66A I66B
		I66C
M08.25	Prä	B61B B61C B61D
	08	I02A I02B I02C
		I08A I08B I12A
		I12B I12C I13A
		I13B I66A I66B
		I66C
M08.26	Prä	B61B B61C B61D
	08	I02A I02B I02C
		I08A I08B I12A
		I12B I12C I13A
		I13B I66A I66B
		I66C
M08.27	08	I02A I02B I02C
		I08A I08B I13A
		I13B I20A I20C
		I66A I66B I66C
M08.28	08	I02A I02B I02C
		I08A I08B I13A
		I13B I66A I66B
		I66C
M08.29	08	I02A I02B I02C
		I08A I08B I13A
		I13B I66A I66B
		I66C
M08.40	Prä	B61B B61C B61D
	08	I02A I02B I02C
		I08A I08B I12A
		I12B I12C I13A
		I13B I20A I20C
		I66A I66B I66C
M08.41	Prä	B61B B61C B61D
	08	I02A I02B I02C
		I08A I08B I12A
		I12B I12C I13A
		I13B I66A I66B
		I66C
M08.42	Prä	B61B B61C B61D
	08	I02A I02B I02C
		I08A I08B I12A
		I12B I12C I13A
		I13B I66A I66B
		I66C
M08.43	Prä	B61B B61C B61D
	08	I02A I02B I02C
		I08A I08B I12A
		I12B I12C I13A
		I13B I66A I66B
		I66C
M08.44	08	I02A I02B I02C
		I08A I08B I13A
		I13B I66A I66B
		I66C
M08.45	Prä	B61B B61C B61D
	08	I02A I02B I02C
		I08A I08B I12A
		I12B I12C I13A
		I13B I66A I66B
		I66C
M08.46	Prä	B61B B61C B61D
	08	I02A I02B I02C
		I08A I08B I12A
		I12B I12C I13A
		I13B I66A I66B
		I66C
M08.47	08	I02A I02B I02C
		I08A I08B I13A
		I13B I20A I20C
		I66A I66B I66C
M08.48	08	I02A I02B I02C

DIAG

ICD	MDC	DRG
		I08A I08B I13A
		I13B I66A I66B
		I66C
M08.49	08	I02A I02B I02C
		I08A I08B I13A
		I13B I66A I66B
		I66C
M08.70	Prä	B61B B61C B61D
	08	I02A I02B I02C
		I08A I08B I12A
		I12B I12C I13A
		I13B I66A I66B
		I66C
M08.71	Prä	B61B B61C B61D
	08	I02A I02B I02C
		I08A I08B I12A
		I12B I12C I13A
		I13B I66A I66B
		I66C
M08.72	Prä	B61B B61C B61D
	08	I02A I02B I02C
		I08A I08B I12A
		I12B I12C I13A
		I13B I66A I66B
		I66C
M08.73	Prä	B61B B61C B61D
	08	I02A I02B I02C
		I08A I08B I12A
		I12B I12C I13A
		I13B I66A I66B
		I66C
M08.74	08	I02A I02B I02C
		I08A I08B I13A
		I13B I66A I66B
		I66C
M08.75	Prä	B61B B61C B61D
	08	I02A I02B I02C
		I08A I08B I12A
		I12B I12C I13A
		I13B I66A I66B
		I66C
M08.76	Prä	B61B B61C B61D
	08	I02A I02B I02C
		I08A I08B I12A
		I12B I12C I13A
		I13B I66A I66B
		I66C
M08.77	08	I02A I02B I02C
		I08A I08B I13A
		I13B I66A I66B
		I66C
M08.78	08	I02A I02B I02C
		I08A I08B I13A
		I13B I66A I66B
		I66C
M08.79	08	I02A I02B I02C
		I08A I08B I13A
		I13B I66A I66B
		I66C
M08.80	Prä	B61B B61C B61D
	08	I02A I02B I02C
		I08A I08B I12A
		I12B I12C I13A
		I13B I20A I20C
		I66A I66B I66C
M08.81	Prä	B61B B61C B61D
	08	I02A I02B I02C
		I08A I08B I12A
		I12B I12C I13A
		I13B I66A I66B
		I66C
M08.82	Prä	B61B B61C B61D
	08	I02A I02B I02C
		I08A I08B I12A
		I12B I12C I13A
		I13B I66A I66B
		I66C
M08.83	Prä	B61B B61C B61D
	08	I02A I02B I02C
		I08A I08B I12A
		I12B I12C I13A
		I13B I66A I66B
		I66C
M08.84	08	I02A I02B I02C
		I08A I08B I13A
		I13B I66A I66B
		I66C
M08.85	Prä	B61B B61C B61D
	08	I02A I02B I02C
		I08A I08B I12A
		I12B I12C I13A
		I13B I66A I66B
		I66C
M08.86	Prä	B61B B61C B61D
	08	I02A I02B I02C
		I08A I08B I12A
		I12B I12C I13A
		I13B I66A I66B
		I66C
M08.87	08	I02A I02B I02C
		I08A I08B I13A
		I13B I20A I20C
		I66A I66B I66C
M08.88	08	I02A I02B I02C
		I08A I08B I13A
		I13B I66A I66B
		I66C
M08.89	08	I02A I02B I02C
		I08A I08B I13A
		I13B I66A I66B
		I66C
M08.90	Prä	B61B B61C B61D
	08	I02A I02B I02C
		I08A I08B I12A
		I12B I12C I13A
		I13B I20A I20C
		I66A I66B I66C
M08.91	Prä	B61B B61C B61D
	08	I02A I02B I02C
		I08A I08B I12A
		I12B I12C I13A
		I13B I66A I66B
		I66C
M08.92	Prä	B61B B61C B61D
	08	I02A I02B I02C
		I08A I08B I12A
		I12B I12C I13A
		I13B I66A I66B
		I66C
M08.93	Prä	B61B B61C B61D
	08	I02A I02B I02C
		I08A I08B I12A
		I12B I12C I13A
		I13B I66A I66B
		I66C
M08.94	08	I02A I02B I02C
		I08A I08B I13A
		I13B I66A I66B
		I66C
M08.95	Prä	B61B B61C B61D
	08	I02A I02B I02C
		I08A I08B I12A
		I12B I12C I13A
		I13B I66A I66B
		I66C
M08.96	Prä	B61B B61C B61D
	08	I02A I02B I02C
		I08A I08B I12A
		I12B I12C I13A
		I13B I66A I66B
		I66C
M08.97	08	I02A I02B I02C
		I08A I08B I13A
		I13B I20A I20C
		I66A I66B I66C
M08.98	08	I02A I02B I02C
		I08A I08B I13A
		I13B I66A I66B
		I66C
M08.99	08	I02A I02B I02C
		I08A I08B I13A
		I13B I66A I66B
		I66C
M09.00	Prä	961Z
	08	I20A I20C
M09.01	Prä	961Z
M09.02	Prä	961Z
M09.03	Prä	961Z
M09.04	Prä	961Z
M09.05	Prä	961Z
M09.06	Prä	961Z
M09.07	Prä	961Z
	08	I20A I20C
M09.08	Prä	961Z
M09.09	Prä	961Z
M09.10	Prä	961Z
	08	I20A I20C
M09.11	Prä	961Z
M09.12	Prä	961Z
M09.13	Prä	961Z
M09.14	Prä	961Z
M09.15	Prä	961Z
M09.16	Prä	961Z
M09.17	Prä	961Z
	08	I20A I20C
M09.18	Prä	961Z
M09.19	Prä	961Z
M09.20	Prä	961Z
	08	I20A I20C
M09.21	Prä	961Z
M09.22	Prä	961Z
M09.23	Prä	961Z
M09.24	Prä	961Z
M09.25	Prä	961Z
M09.26	Prä	961Z
M09.27	Prä	961Z
	08	I20A I20C
M09.28	Prä	961Z
M09.29	Prä	961Z
M09.80	Prä	961Z
	08	I20A I20C
M09.81	Prä	961Z
M09.82	Prä	961Z
M09.83	Prä	961Z
M09.84	Prä	961Z
M09.85	Prä	961Z
M09.86	Prä	961Z
M09.87	Prä	961Z
	08	I20A I20C
M09.88	Prä	961Z

ICD	MDC	DRG
M09.89	Prä	961Z
M10.00	08	I69A I69B I69C
M10.01	08	I69A I69B I69C
M10.02	08	I69A I69B I69C
M10.03	08	I69A I69B I69C
M10.04	08	I69A I69B I69C
M10.05	08	I69A I69B I69C
M10.06	08	I69A I69B I69C
M10.07	08	I69A I69B I69C
M10.08	08	I69A I69B I69C
M10.09	08	I69A I69B I69C
M10.10	15	MSPNG SPNG
	21B	X64Z
M10.11	15	MSPNG SPNG
	21B	X64Z
M10.12	15	MSPNG SPNG
	21B	X64Z
M10.13	15	MSPNG SPNG
	21B	X64Z
M10.14	15	MSPNG SPNG
	21B	X64Z
M10.15	15	MSPNG SPNG
	21B	X64Z
M10.16	15	MSPNG SPNG
	21B	X64Z
M10.17	15	MSPNG SPNG
	21B	X64Z
M10.18	15	MSPNG SPNG
	21B	X64Z
M10.19	15	MSPNG SPNG
	21B	X64Z
M10.20	08	I69A I69B I69C
	15	MSPNG SPNG
M10.21	08	I69A I69B I69C
	15	MSPNG SPNG
M10.22	08	I69A I69B I69C
	15	MSPNG SPNG
M10.23	08	I69A I69B I69C
	15	MSPNG SPNG
M10.24	08	I69A I69B I69C
	15	MSPNG SPNG
M10.25	08	I69A I69B I69C
	15	MSPNG SPNG
M10.26	08	I69A I69B I69C
	15	MSPNG SPNG
M10.27	08	I69A I69B I69C
	15	MSPNG SPNG
M10.28	08	I69A I69B I69C
	15	MSPNG SPNG
M10.29	08	I69A I69B I69C
	15	MSPNG SPNG
M10.30	11	L68A L68B L68C
M10.31	11	L68A L68B L68C
M10.32	11	L68A L68B L68C
M10.33	11	L68A L68B L68C
M10.34	11	L68A L68B L68C
M10.35	11	L68A L68B L68C
M10.36	11	L68A L68B L68C
M10.37	11	L68A L68B L68C
M10.38	11	L68A L68B L68C
M10.39	11	L68A L68B L68C
M10.40	08	I69A I69B I69C
M10.41	08	I69A I69B I69C
M10.42	08	I69A I69B I69C
M10.43	08	I69A I69B I69C
M10.44	08	I69A I69B I69C
M10.45	08	I69A I69B I69C
M10.46	08	I69A I69B I69C
M10.47	08	I69A I69B I69C
M10.48	08	I69A I69B I69C
M10.49	08	I69A I69B I69C
M10.90	08	I69A I69B I69C
M10.91	08	I69A I69B I69C
M10.92	08	I69A I69B I69C
M10.93	08	I69A I69B I69C
M10.94	08	I69A I69B I69C
M10.95	08	I69A I69B I69C
M10.96	08	I69A I69B I69C
M10.97	08	I69A I69B I69C
M10.98	08	I69A I69B I69C
M10.99	08	I69A I69B I69C
M11.00	08	I69A I69B I69C
M11.01	08	I69A I69B I69C
M11.02	08	I69A I69B I69C
M11.03	08	I69A I69B I69C
M11.04	08	I02A I02B I02C
		I32A I32B I32C
		I32D I32E I32F
		I69A I69B I69C
M11.05	08	I69A I69B I69C
M11.06	08	I69A I69B I69C
M11.07	08	I69A I69B I69C
M11.08	08	I69A I69B I69C
M11.09	08	I69A I69B I69C
M11.10	08	I69A I69B I69C
M11.11	08	I69A I69B I69C
M11.12	08	I69A I69B I69C
M11.13	08	I69A I69B I69C
M11.14	08	I02A I02B I02C
		I32A I32B I32C
		I32D I32E I32F
		I69A I69B I69C
M11.15	08	I69A I69B I69C
M11.16	08	I69A I69B I69C
M11.17	08	I69A I69B I69C
M11.18	08	I69A I69B I69C
M11.19	08	I69A I69B I69C
M11.20	08	I69A I69B I69C
M11.21	08	I69A I69B I69C
M11.22	08	I69A I69B I69C
M11.23	08	I69A I69B I69C
M11.24	08	I02A I02B I02C
		I32A I32B I32C
		I32D I32E I32F
		I69A I69B I69C
M11.25	08	I69A I69B I69C
M11.26	08	I69A I69B I69C
M11.27	08	I69A I69B I69C
M11.28	08	I69A I69B I69C
M11.29	08	I69A I69B I69C
M11.80	08	I69A I69B I69C
M11.81	08	I69A I69B I69C
M11.82	08	I69A I69B I69C
M11.83	08	I69A I69B I69C
M11.84	08	I02A I02B I02C
		I32A I32B I32C
		I32D I32E I32F
		I69A I69B I69C
M11.85	08	I69A I69B I69C
M11.86	08	I69A I69B I69C
M11.87	08	I69A I69B I69C
M11.88	08	I69A I69B I69C
M11.89	08	I69A I69B I69C
M11.90	08	I69A I69B I69C
M11.91	08	I69A I69B I69C
M11.92	08	I69A I69B I69C
M11.93	08	I69A I69B I69C
M11.94	08	I02A I02B I02C
		I32A I32B I32C
		I32D I32E I32F
		I69A I69B I69C
M11.95	08	I69A I69B I69C
M11.96	08	I69A I69B I69C
M11.97	08	I69A I69B I69C
M11.98	08	I69A I69B I69C
M11.99	08	I69A I69B I69C
M12.00	Prä	B61B B61C B61D
	08	I02A I02B I02C
		I08A I08B I12A
		I12B I12C I13A
		I13B I69A I69B
		I69C
M12.01	Prä	B61B B61C B61D
	08	I02A I02B I02C
		I08A I08B I12A
		I12B I12C I13A
		I13B I69A I69B
		I69C
M12.02	Prä	B61B B61C B61D
	08	I02A I02B I02C
		I08A I08B I12A
		I12B I12C I13A
		I13B I69A I69B
		I69C
M12.03	Prä	B61B B61C B61D
	08	I02A I02B I02C
		I08A I08B I12A
		I12B I12C I13A
		I13B I69A I69B
		I69C
M12.04	08	I02A I02B I02C
		I08A I08B I13A
		I13B I69A I69B
		I69C
M12.05	Prä	B61B B61C B61D
	08	I02A I02B I02C
		I08A I08B I12A
		I12B I12C I13A
		I13B I69A I69B
		I69C
M12.06	Prä	B61B B61C B61D
	08	I02A I02B I02C
		I08A I08B I12A
		I12B I12C I13A
		I13B I69A I69B
		I69C
M12.07	08	I02A I02B I02C
		I08A I08B I13A
		I13B I69A I69B
		I69C
M12.08	08	I02A I02B I02C
		I08A I08B I13A
		I13B I69A I69B
		I69C
M12.09	08	I02A I02B I02C
		I08A I08B I13A
		I13B I69A I69B
		I69C
M12.10	08	I69A I69B I69C
M12.11	08	I69A I69B I69C
M12.12	08	I69A I69B I69C
M12.13	08	I69A I69B I69C
M12.14	08	I02A I02B I02C
		I32A I32B I32C
		I32D I32E I32F
		I69A I69B I69C
M12.15	08	I69A I69B I69C
M12.16	08	I69A I69B I69C
M12.17	08	I69A I69B I69C
M12.18	08	I69A I69B I69C

DIAG

ICD	MDC	DRG
M12.19	08	I69A I69B I69C
M12.20	08	I69A I69B I69C
M12.21	08	I69A I69B I69C
M12.22	08	I69A I69B I69C
M12.23	08	I69A I69B I69C
M12.24	08	I02A I02B I02C
		I32A I32B I32C
		I32D I32E I32F
		I69A I69B I69C
M12.25	08	I69A I69B I69C
M12.26	08	I69A I69B I69C
M12.27	08	I69A I69B I69C
M12.28	08	I69A I69B I69C
M12.29	08	I69A I69B I69C
M12.30	08	I69A I69B I69C
M12.31	08	I69A I69B I69C
M12.32	08	I69A I69B I69C
M12.33	08	I69A I69B I69C
M12.34	08	I02A I02B I02C
		I32A I32B I32C
		I32D I32E I32F
		I69A I69B I69C
M12.35	08	I69A I69B I69C
M12.36	08	I69A I69B I69C
M12.37	08	I69A I69B I69C
M12.38	08	I69A I69B I69C
M12.39	08	I69A I69B I69C
M12.40	08	I69A I69B I69C
M12.41	08	I69A I69B I69C
M12.42	08	I69A I69B I69C
M12.43	08	I69A I69B I69C
M12.44	08	I02A I02B I02C
		I32A I32B I32C
		I32D I32E I32F
		I69A I69B I69C
M12.45	08	I69A I69B I69C
M12.46	08	I69A I69B I69C
M12.47	08	I69A I69B I69C
M12.48	08	I69A I69B I69C
M12.49	08	I69A I69B I69C
M12.50	08	I69A I69B I69C
M12.51	08	I69A I69B I69C
M12.52	08	I69A I69B I69C
M12.53	08	I69A I69B I69C
M12.54	08	I02A I02B I02C
		I32A I32B I32C
		I32D I32E I32F
		I69A I69B I69C
M12.55	08	I69A I69B I69C
M12.56	08	I69A I69B I69C
M12.57	08	I69A I69B I69C
M12.58	08	I69A I69B I69C
M12.59	08	I69A I69B I69C
M12.80	08	I69A I69B I69C
M12.81	08	I69A I69B I69C
M12.82	08	I69A I69B I69C
M12.83	08	I69A I69B I69C
M12.84	08	I02A I02B I02C
		I32A I32B I32C
		I32D I32E I32F
		I69A I69B I69C
M12.85	08	I69A I69B I69C
M12.86	08	I69A I69B I69C
M12.87	08	I69A I69B I69C
M12.88	08	I69A I69B I69C
M12.89	08	I69A I69B I69C
M13.0	08	I69A I69B I69C
M13.11	08	I69A I69B I69C
M13.12	08	I69A I69B I69C
M13.13	08	I69A I69B I69C
M13.14	08	I02A I02B I02C
		I32A I32B I32C
		I32D I32E I32F
		I69A I69B I69C
M13.15	08	I69A I69B I69C
M13.16	08	I69A I69B I69C
M13.17	08	I69A I69B I69C
M13.18	08	I69A I69B I69C
M13.19	08	I69A I69B I69C
M13.80	08	I69A I69B I69C
M13.81	08	I69A I69B I69C
M13.82	08	I69A I69B I69C
M13.83	08	I69A I69B I69C
M13.84	08	I02A I02B I02C
		I32A I32B I32C
		I32D I32E I32F
		I69A I69B I69C
M13.85	08	I69A I69B I69C
M13.86	08	I69A I69B I69C
M13.87	08	I69A I69B I69C
M13.88	08	I69A I69B I69C
M13.89	08	I69A I69B I69C
M13.90	08	I69A I69B I69C
M13.91	08	I69A I69B I69C
M13.92	08	I69A I69B I69C
M13.93	08	I69A I69B I69C
M13.94	08	I02A I02B I02C
		I32A I32B I32C
		I32D I32E I32F
		I69A I69B I69C
M13.95	08	I69A I69B I69C
M13.96	08	I69A I69B I69C
M13.97	08	I69A I69B I69C
M13.98	08	I69A I69B I69C
M13.99	08	I69A I69B I69C
M14.00	Prä	961Z
M14.01	Prä	961Z
M14.02	Prä	961Z
M14.03	Prä	961Z
M14.04	Prä	961Z
M14.05	Prä	961Z
M14.06	Prä	961Z
M14.07	Prä	961Z
M14.08	Prä	961Z
M14.09	Prä	961Z
M14.10	Prä	961Z
M14.11	Prä	961Z
M14.12	Prä	961Z
M14.13	Prä	961Z
M14.14	Prä	961Z
M14.15	Prä	961Z
M14.16	Prä	961Z
M14.17	Prä	961Z
M14.18	Prä	961Z
M14.19	Prä	961Z
M14.20	Prä	961Z
M14.21	Prä	961Z
M14.22	Prä	961Z
M14.23	Prä	961Z
M14.24	Prä	961Z
M14.25	Prä	961Z
M14.26	Prä	961Z
M14.27	Prä	961Z
M14.28	Prä	961Z
M14.29	Prä	961Z
M14.30	Prä	961Z
M14.31	Prä	961Z
M14.32	Prä	961Z
M14.33	Prä	961Z
M14.34	Prä	961Z
M14.35	Prä	961Z
M14.36	Prä	961Z
M14.37	Prä	961Z
M14.38	Prä	961Z
M14.39	Prä	961Z
M14.40	Prä	961Z
M14.41	Prä	961Z
M14.42	Prä	961Z
M14.43	Prä	961Z
M14.44	Prä	961Z
M14.45	Prä	961Z
M14.46	Prä	961Z
M14.47	Prä	961Z
M14.48	Prä	961Z
M14.49	Prä	961Z
M14.50	Prä	961Z
M14.51	Prä	961Z
M14.52	Prä	961Z
M14.53	Prä	961Z
M14.54	Prä	961Z
M14.55	Prä	961Z
M14.56	Prä	961Z
M14.57	Prä	961Z
M14.58	Prä	961Z
M14.59	Prä	961Z
M14.60	Prä	961Z
M14.61	Prä	961Z
M14.62	Prä	961Z
M14.63	Prä	961Z
M14.64	Prä	961Z
M14.65	Prä	961Z
M14.66	Prä	961Z
M14.67	Prä	961Z
M14.68	Prä	961Z
M14.69	Prä	961Z
M14.80	15	MSPNG SPNG
	Prä	961Z
M14.81	15	MSPNG SPNG
	Prä	961Z
M14.82	15	MSPNG SPNG
	Prä	961Z
M14.83	15	MSPNG SPNG
	Prä	961Z
M14.84	15	MSPNG SPNG
	Prä	961Z
M14.85	15	MSPNG SPNG
	Prä	961Z
M14.86	15	MSPNG SPNG
	Prä	961Z
M14.87	15	MSPNG SPNG
	Prä	961Z
M14.88	15	MSPNG SPNG
	Prä	961Z
M14.89	15	MSPNG SPNG
	Prä	961Z
M15.0	08	I69A I69B I69C
M15.1	08	I02A I02B I02C
		I32A I32B I32C
		I32D I32E I32F
		I69A I69B I69C
M15.2	08	I02A I02B I02C
		I32A I32B I32C
		I32D I32E I32F
		I69A I69B I69C
M15.3	08	I69A I69B I69C
M15.4	08	I69A I69B I69C
M15.8	08	I69A I69B I69C
M15.9	08	I69A I69B I69C
M16.0	08	I69A I69B I69C
M16.1	08	I69A I69B I69C

ICD	MDC	DRG
M16.2	08	I69A I69B I69C
M16.3	08	I69A I69B I69C
M16.4	08	I69A I69B I69C
M16.5	08	I69A I69B I69C
M16.6	08	I69A I69B I69C
M16.7	08	I69A I69B I69C
M16.9	08	I69A I69B I69C
M17.0	08	I69A I69B I69C
M17.1	08	I69A I69B I69C
M17.2	08	I69A I69B I69C
M17.3	08	I69A I69B I69C
M17.4	08	I69A I69B I69C
M17.5	08	I69A I69B I69C
M17.9	08	I69A I69B I69C
M18.0	08	I02A I02B I02C
		I32A I32B I32C
		I32D I32E I32F
		I69A I69B I69C
M18.1	08	I02A I02B I02C
		I32A I32B I32C
		I32D I32E I32F
		I69A I69B I69C
M18.2	08	I02A I02B I02C
		I32A I32B I32C
		I32D I32E I32F
		I69A I69B I69C
M18.3	08	I02A I02B I02C
		I32A I32B I32C
		I32D I32E I32F
		I69A I69B I69C
M18.4	08	I02A I02B I02C
		I32A I32B I32C
		I32D I32E I32F
		I69A I69B I69C
M18.5	08	I02A I02B I02C
		I32A I32B I32C
		I32D I32E I32F
		I69A I69B I69C
M18.9	08	I02A I02B I02C
		I32A I32B I32C
		I32D I32E I32F
		I69A I69B I69C
M19.01	08	I69A I69B I69C
M19.02	08	I69A I69B I69C
M19.03	08	I69A I69B I69C
M19.04	08	I02A I02B I02C
		I32A I32B I32C
		I32D I32E I32F
		I69A I69B I69C
M19.05	08	I69A I69B I69C
M19.07	08	I69A I69B I69C
M19.08	08	I69A I69B I69C
M19.09	08	I69A I69B I69C
M19.11	08	I69A I69B I69C
M19.12	08	I69A I69B I69C
M19.13	08	I69A I69B I69C
M19.14	08	I02A I02B I02C
		I32A I32B I32C
		I32D I32E I32F
		I69A I69B I69C
M19.15	08	I69A I69B I69C
M19.17	08	I69A I69B I69C
M19.18	08	I69A I69B I69C
M19.19	08	I69A I69B I69C
M19.21	08	I69A I69B I69C
M19.22	08	I69A I69B I69C
M19.23	08	I69A I69B I69C
M19.24	08	I02A I02B I02C
		I32A I32B I32C
		I32D I32E I32F
		I69A I69B I69C
M19.25	08	I69A I69B I69C
M19.27	08	I69A I69B I69C
M19.28	08	I69A I69B I69C
M19.29	08	I69A I69B I69C
M19.81	08	I69A I69B I69C
M19.82	08	I69A I69B I69C
M19.83	08	I69A I69B I69C
M19.84	08	I02A I02B I02C
		I32A I32B I32C
		I32D I32E I32F
		I69A I69B I69C
M19.85	08	I69A I69B I69C
M19.87	08	I69A I69B I69C
M19.88	08	I69A I69B I69C
M19.89	08	I69A I69B I69C
M19.91	08	I69A I69B I69C
M19.92	08	I69A I69B I69C
M19.93	08	I69A I69B I69C
M19.94	08	I02A I02B I02C
		I32A I32B I32C
		I32D I32E I32F
		I69A I69B I69C
M19.95	08	I69A I69B I69C
M19.97	08	I69A I69B I69C
M19.98	08	I69A I69B I69C
M19.99	08	I69A I69B I69C
M20.0	08	I02A I02B I02C
		I32A I32B I32C
		I32D I32E I32F
		I69A I69B I69C
M20.1	08	I69A I69B I69C
M20.2	08	I69A I69B I69C
M20.3	08	I69A I69B I69C
M20.4	08	I69A I69B I69C
M20.5	08	I69A I69B I69C
M20.6	08	I69A I69B I69C
M21.00	08	I08B I11Z I13A
		I69A I69B I69C
M21.01	08	I08B I11Z I13A
		I69A I69B I69C
M21.02	08	I08B I11Z I13A
		I69A I69B I69C
M21.03	08	I08B I11Z I13A
		I69A I69B I69C
M21.04	08	I08B I11Z I13A
		I69A I69B I69C
M21.4	08	I20A I69A I69B
		I69C
M21.05	08	I08B I11Z I13A
		I69A I69B I69C
M21.06	08	I08B I11Z I13A
		I69A I69B I69C
M21.07	08	I08B I11Z I13A
		I69A I69B I69C
M21.08	08	I08B I11Z I13A
		I69A I69B I69C
M21.09	08	I08B I11Z I13A
		I69A I69B I69C
M21.10	08	I08B I11Z I13A
		I69A I69B I69C
M21.11	08	I08B I11Z I13A
		I69A I69B I69C
M21.12	08	I08B I11Z I13A
		I69A I69B I69C
M21.13	08	I08B I11Z I13A
		I69A I69B I69C
M21.14	08	I08B I11Z I13A
		I69A I69B I69C
M21.15	08	I08B I11Z I13A
		I69A I69B I69C
M21.16	08	I08B I11Z I13A
		I69A I69B I69C
M21.17	08	I08B I11Z I13A
		I69A I69B I69C
M21.18	08	I08B I11Z I13A
		I69A I69B I69C
M21.19	08	I08B I11Z I13A
		I69A I69B I69C
M21.20	08	I08B I11Z I13A
		I69A I69B I69C
M21.21	08	I08B I11Z I13A
		I69A I69B I69C
M21.22	08	I08B I11Z I13A
		I69A I69B I69C
M21.23	08	I08B I11Z I13A
		I69A I69B I69C
M21.24	08	I08B I11Z I13A
		I69A I69B I69C
M21.25	08	I08B I11Z I13A
		I69A I69B I69C
M21.26	08	I08B I11Z I13A
		I69A I69B I69C
M21.27	08	I08B I11Z I13A
		I69A I69B I69C
M21.28	08	I08B I11Z I13A
		I69A I69B I69C
M21.29	08	I08B I11Z I13A
		I69A I69B I69C
M21.30	08	I69A I69B I69C
M21.33	01	B03A B03B B03C
		B71A B71B B71C
M21.37	08	I69A I69B I69C
M21.50	01	B03A B03B B03C
		B71A B71B B71C
M21.54	01	B03A B03B B03C
		B71A B71B B71C
M21.57	08	I69A I69B I69C
M21.60	08	I08B I11Z I13A
		I20A I69A I69B
		I69C
M21.61	08	I08B I11Z I13A
		I20A I69A I69B
		I69C
M21.62	08	I08B I11Z I13A
		I69A I69B I69C
M21.63	08	I08B I11Z I13A
		I69A I69B I69C
M21.68	08	I08B I11Z I13A
		I69A I69B I69C
M21.70	08	I08B I11Z I13A
		I69A I69B I69C
M21.71	08	I08B I11Z I13A
		I69A I69B I69C
M21.72	08	I08B I11Z I13A
		I69A I69B I69C
M21.73	08	I08B I11Z I13A
		I69A I69B I69C
M21.74	08	I08B I11Z I13A
		I69A I69B I69C
M21.75	08	I08B I11Z I13A
		I69A I69B I69C
M21.76	08	I08B I11Z I13A
		I69A I69B I69C
M21.77	08	I08B I11Z I13A
		I69A I69B I69C
M21.79	08	I08B I11Z I13A
		I69A I69B I69C
M21.80	08	I08B I11Z I13A
		I69A I69B I69C

DIAG

ICD	MDC	DRG
M21.81	08	I08B I11Z I13A
		I69A I69B I69C
M21.82	08	I08B I11Z I13A
		I69A I69B I69C
M21.83	08	I08B I11Z I13A
		I69A I69B I69C
M21.84	08	I02A I02B I02C
		I08B I11Z I13A
		I32A I32B I32C
		I32D I32E I32F
		I69A I69B I69C
M21.85	08	I08B I11Z I13A
		I69A I69B I69C
M21.86	08	I08B I11Z I13A
		I69A I69B I69C
M21.89	08	I08B I11Z I13A
		I69A I69B I69C
M21.90	08	I69A I69B I69C
M21.91	08	I69A I69B I69C
M21.92	08	I69A I69B I69C
M21.93	08	I69A I69B I69C
M21.94	08	I02A I02B I02C
		I32A I32B I32C
		I32D I32E I32F
		I69A I69B I69C
M21.95	08	I69A I69B I69C
M21.96	08	I69A I69B I69C
M21.97	08	I69A I69B I69C
M21.99	08	I69A I69B I69C
M22.0	08	I77A I77B
M22.1	08	I77A I77B
M22.2	08	I77A I77B
M22.3	08	I77A I77B
M22.4	08	I77A I77B
M22.8	08	I77A I77B
M22.9	08	I77A I77B
M23.00	08	I77A I77B
M23.01	08	I77A I77B
M23.02	08	I77A I77B
M23.03	08	I77A I77B
M23.04	08	I77A I77B
M23.4	08	I76A I76B
M23.05	08	I77A I77B
M23.06	08	I77A I77B
M23.09	08	I77A I77B
M23.10	08	I77A I77B
M23.13	08	I77A I77B
M23.16	08	I77A I77B
M23.19	08	I77A I77B
M23.20	08	I77A I77B
M23.21	08	I77A I77B
M23.22	08	I77A I77B
M23.23	08	I77A I77B
M23.24	08	I77A I77B
M23.25	08	I77A I77B
M23.26	08	I77A I77B
M23.29	08	I77A I77B
M23.30	08	I77A I77B
M23.31	08	I77A I77B
M23.32	08	I77A I77B
M23.33	08	I77A I77B
M23.34	08	I77A I77B
M23.35	08	I77A I77B
M23.36	08	I77A I77B
M23.39	08	I77A I77B
M23.50	08	I77A I77B
M23.51	08	I77A I77B
M23.52	08	I77A I77B
M23.53	08	I77A I77B
M23.54	08	I77A I77B
M23.57	08	I77A I77B
M23.59	08	I77A I77B
M23.60	08	I77A I77B
M23.61	08	I77A I77B
M23.62	08	I77A I77B
M23.63	08	I77A I77B
M23.64	08	I77A I77B
M23.67	08	I77A I77B
M23.69	08	I77A I77B
M23.80	08	I77A I77B
M23.81	08	I77A I77B
M23.82	08	I77A I77B
M23.83	08	I77A I77B
M23.84	08	I77A I77B
M23.87	08	I77A I77B
M23.89	08	I77A I77B
M23.90	08	I77A I77B
M23.91	08	I77A I77B
M23.92	08	I77A I77B
M23.93	08	I77A I77B
M23.94	08	I77A I77B
M23.95	08	I77A I77B
M23.96	08	I77A I77B
M23.97	08	I77A I77B
M23.99	08	I77A I77B
M24.00	08	I76A I76B
M24.01	08	I76A I76B
M24.02	08	I76A I76B
M24.03	08	I76A I76B
M24.04	08	I02A I02B I02C
		I32A I32B I32C
		I32D I32E I32F
		I76A I76B
M24.05	08	I76A I76B
M24.07	08	I76A I76B
M24.7	08	I76A I76B
M24.08	08	I76A I76B
M24.09	08	I76A I76B
M24.10	08	I76A I76B
M24.11	08	I77A I77B
M24.12	08	I77A I77B
M24.13	08	I74A I74B
M24.14	08	I02A I02B I02C
		I32A I32B I32C
		I32D I32E I32F
		I74A I74B
M24.15	08	I76A I76B
M24.17	08	I77A I77B
M24.18	08	I76A I76B
M24.19	08	I76A I76B
M24.20	08	I72Z I75A I75B
		I75C
M24.21	08	I72Z I75A I75B
		I75C
M24.22	08	I72Z I75A I75B
		I75C
M24.23	08	I72Z I75A I75B
		I75C
M24.24	08	I72Z I75A I75B
		I75C
M24.25	08	I72Z I75A I75B
		I75C
M24.27	08	I72Z I75A I75B
		I75C
M24.28	08	I72Z I75A I75B
		I75C
M24.29	08	I72Z I75A I75B
		I75C
M24.30	08	I76A I76B
M24.31	08	I77A I77B
M24.32	08	I77A I77B
M24.33	08	I74A I74B
M24.34	08	I02A I02B I02C
		I32A I32B I32C
		I32D I32E I32F
		I74A I74B
M24.35	08	I76A I76B
M24.36	08	I77A I77B
M24.37	08	I77A I77B
M24.38	08	I76A I76B
M24.39	08	I74A I74B
M24.40	08	I76A I76B
M24.41	08	I77A I77B
M24.42	08	I77A I77B
M24.43	08	I74A I74B
M24.44	08	I02A I02B I02C
		I32A I32B I32C
		I32D I32E I32F
		I74A I74B
M24.45	08	I76A I76B
M24.46	08	I77A I77B
M24.47	08	I77A I77B
M24.48	08	I76A I76B
M24.49	08	I76A I76B
M24.50	08	I76A I76B
M24.51	08	I76A I76B
M24.52	08	I76A I76B
M24.53	08	I76A I76B
M24.54	08	I02A I02B I02C
		I32A I32B I32C
		I32D I32E I32F
		I76A I76B
M24.55	08	I76A I76B
M24.56	08	I76A I76B
M24.57	08	I76A I76B
M24.58	08	I76A I76B
M24.59	08	I76A I76B
M24.60	08	I69A I69B I69C
M24.61	08	I69A I69B I69C
M24.62	08	I69A I69B I69C
M24.63	08	I69A I69B I69C
M24.64	08	I02A I02B I02C
		I32A I32B I32C
		I32D I32E I32F
		I69A I69B I69C
M24.65	08	I69A I69B I69C
M24.66	08	I69A I69B I69C
M24.67	08	I69A I69B I69C
M24.68	08	I69A I69B I69C
M24.69	08	I69A I69B I69C
M24.80	08	I76A I76B
M24.81	08	I76A I76B
M24.82	08	I76A I76B
M24.83	08	I76A I76B
M24.84	08	I02A I02B I02C
		I32A I32B I32C
		I32D I32E I32F
		I76A I76B
M24.85	08	I76A I76B
M24.87	08	I76A I76B
M24.88	08	I76A I76B
M24.89	08	I76A I76B
M24.90	08	I76A I76B
M24.91	08	I76A I76B
M24.92	08	I76A I76B
M24.93	08	I76A I76B
M24.94	08	I02A I02B I02C
		I32A I32B I32C
		I32D I32E I32F
		I76A I76B

ICD	MDC	DRG
M24.95	08	I76A I76B
M24.97	08	I76A I76B
M24.98	08	I76A I76B
M24.99	08	I76A I76B
M25.00	08	I69A I69B I69C
M25.01	08	I69A I69B I69C
M25.02	08	I69A I69B I69C
M25.03	08	I69A I69B I69C
M25.04	08	I02A I02B I02C
		I32A I32B I32C
		I32D I32E I32F
		I69A I69B I69C
M25.05	08	I69A I69B I69C
M25.06	08	I69A I69B I69C
M25.07	08	I69A I69B I69C
M25.08	08	I69A I69B I69C
M25.09	08	I69A I69B I69C
M25.10	08	I71A I71B
M25.11	08	I71A I71B
M25.12	08	I71A I71B
M25.13	08	I71A I71B
M25.14	08	I02A I02B I02C
		I32A I32B I32C
		I32D I32E I32F
		I71A I71B
M25.15	08	I71A I71B
M25.16	08	I71A I71B
M25.17	08	I71A I71B
M25.18	08	I71A I71B
M25.19	08	I71A I71B
M25.20	08	I76A I76B
M25.21	08	I76A I76B
M25.22	08	I76A I76B
M25.23	08	I76A I76B
M25.24	08	I02A I02B I02C
		I32A I32B I32C
		I32D I32E I32F
		I76A I76B
M25.25	08	I76A I76B
M25.26	08	I77A I77B
M25.27	08	I76A I76B
M25.28	08	I76A I76B
M25.29	08	I76A I76B
M25.30	08	I76A I76B
M25.31	08	I76A I76B
M25.32	08	I76A I76B
M25.33	08	I76A I76B
M25.34	08	I02A I02B I02C
		I32A I32B I32C
		I32D I32E I32F
		I76A I76B
M25.35	08	I76A I76B
M25.36	08	I77A I77B
M25.37	08	I76A I76B
M25.38	08	I76A I76B
M25.39	08	I76A I76B
M25.40	08	I76A I76B
M25.41	08	I76A I76B
M25.42	08	I76A I76B
M25.43	08	I76A I76B
M25.44	08	I02A I02B I02C
		I32A I32B I32C
		I32D I32E I32F
		I76A I76B
M25.45	08	I76A I76B
M25.46	08	I76A I76B
M25.47	08	I76A I76B
M25.48	08	I76A I76B
M25.49	08	I76A I76B
M25.50	08	I71A I71B
M25.51	08	I71A I71B
M25.52	08	I71A I71B
M25.53	08	I71A I71B
M25.54	08	I02A I02B I02C
		I32A I32B I32C
		I32D I32E I32F
		I71A I71B
M25.55	08	I71A I71B
M25.56	08	I71A I71B
M25.57	08	I71A I71B
M25.58	08	I71A I71B
M25.59	08	I71A I71B
M25.60	08	I71A I71B
M25.61	08	I71A I71B
M25.62	08	I71A I71B
M25.63	08	I71A I71B
M25.64	08	I02A I02B I02C
		I32A I32B I32C
		I32D I32E I32F
		I71A I71B
M25.65	08	I71A I71B
M25.66	08	I71A I71B
M25.67	08	I71A I71B
M25.68	08	I71A I71B
M25.69	08	I71A I71B
M25.70	08	I76A I76B
M25.71	08	I76A I76B
M25.72	08	I76A I76B
M25.73	08	I76A I76B
M25.74	08	I02A I02B I02C
		I32A I32B I32C
		I32D I32E I32F
		I76A I76B
M25.75	08	I76A I76B
M25.76	08	I77A I77B
M25.77	08	I76A I76B
M25.78	08	I76A I76B
M25.79	08	I76A I76B
M25.80	08	I71A I71B
M25.81	08	I71A I71B
M25.82	08	I71A I71B
M25.83	08	I71A I71B
M25.84	08	I02A I02B I02C
		I32A I32B I32C
		I32D I32E I32F
		I71A I71B
M25.85	08	I71A I71B
M25.86	08	I71A I71B
M25.87	08	I71A I71B
M25.88	08	I71A I71B
M25.89	08	I71A I71B
M25.90	08	I71A I71B
M25.91	08	I71A I71B
M25.92	08	I71A I71B
M25.93	08	I71A I71B
M25.94	08	I02A I02B I02C
		I32A I32B I32C
		I32D I32E I32F
		I71A I71B
M25.95	08	I71A I71B
M25.96	08	I71A I71B
M25.97	08	I71A I71B
M25.98	08	I76A I76B
M25.99	08	I71A I71B
M30.0	02	C60A C61A
	05	F62A
	08	I66A I66B I66C
M30.1	02	C60A C61A
	05	F62A
	08	I66A I66B I66C
M30.2	08	I66A I66B I66C
M30.3	02	C60A C61A
	05	F62A
	08	I66A I66B I66C
M30.8	08	I66A I66B I66C
M31.0	08	I66A I66B I66C
M31.1	Prä	A11C
	06	G67C
	07	H63A
	11	L37A L37B L72Z
M31.3	Prä	A11C
	02	C60A C61A
	05	F62A
	08	I66A I66B I66C
M31.4	Prä	A11C
	02	C60A C61A
	05	F62A
	08	I66A I66B I66C
M31.5	Prä	A11C
	08	I66A I66B I66C
M31.6	08	I66A I66B I66C
M31.7	08	I66A I66B I66C
M31.8	08	I66A I66B I66C
M31.9	08	I66A I66B I66C
M32.0	02	C60A C61A
	05	F62A
	08	I66A I66B I66C
	15	MSPNG SPNG
M32.1	02	C60A C61A
	05	F62A
	08	I66A I66B I66C
	15	MSPNG SPNG
	Prä	A11C
M32.8	02	C60A C61A
	05	F62A
	08	I66A I66B I66C
	15	MSPNG SPNG
M32.9	02	C60A C61A
	05	F62A
	08	I66A I66B I66C
	15	MSPNG SPNG
M33.0	08	I66A I66B I66C
M33.1	Prä	B61B B61C B61D
	08	I02A I02B I02C
		I08A I08B I12A
		I12B I12C I13A
		I13B I66A I66B
		I66C
M33.2	Prä	B61B B61C B61D
	02	C60A C61A
	05	F62A
	08	I02A I02B I02C
		I08A I08B I12A
		I12B I12C I13A
		I13B I66A I66B
		I66C
M33.9	08	I66A I66B I66C
M34.0	Prä	B61B B61C B61D
	02	C60A C61A
	05	F62A
	08	I02A I02B I02C
		I08A I08B I12A
		I12B I12C I13A
		I13B I66A I66B
		I66C
M34.1	08	I66A I66B I66C
M34.2	08	I66A I66B I66C
M34.8	08	I66A I66B I66C
M34.9	Prä	B61B B61C B61D
	08	I02A I02B I02C

DIAG

ICD	MDC	DRG
		I08A I08B I12A I12B I12C I13A I13B I66A I66B I66C
M35.0	02	C60A C61A
	05	F62A
	08	I66A I66B I66C
M35.1	Prä	B61B B61C B61D
	02	C60A C61A
	05	F62A
	08	I02A I02B I02C I08A I08B I12A I12B I12C I13A I13B I66A I66B I66C
M35.2	Prä	B61B B61C B61D
	02	C60A C61A
	05	F62A
	08	I02A I02B I02C I08A I08B I12A I12B I12C I13A I13B I66A I66B I66C
M35.3	08	I66A I66B I66C
M35.4	08	I72Z I75A I75B I75C
M35.5	08	I66A I66B I66C
M35.6	09	J61A J61B J61C J61D
M35.7	08	I72Z I75A I75B I75C
M35.8	08	I66A I66B I66C
M35.9	08	I66A I66B I66C
M36.0	Prä	961Z
M36.1	15	MSPNG SPNG
	Prä	961Z
M36.2	15	MSPNG SPNG
	Prä	961Z
M36.3	15	MSPNG SPNG
	Prä	961Z
M36.4	Prä	961Z
M36.8	15	MSPNG SPNG
	Prä	961Z
M36.51	15	MSPNG SPNG
	Prä	961Z
M36.52	15	MSPNG SPNG
	Prä	961Z
M36.53	15	MSPNG SPNG
	17	R50A R60A R60B R61A R61B R61C
	Prä	961Z A93A A97A A97B A97C A97D
M40.00	08	I09D I68A I68B I68C I68D
M40.01	08	I09D I68A I68B I68C I68D
M40.02	08	I09D I68A I68B I68C I68D
M40.03	08	I09D I68A I68B I68C I68D
M40.04	08	I09D I68A I68B I68C I68D
M40.05	08	I09D I68A I68B I68C I68D
M40.06	08	I09D I68A I68B I68C I68D
M40.07	08	I09D I68A I68B I68C I68D
M40.08	08	I09D I68A I68B I68C I68D
M40.09	08	I09D I68A I68B I68C I68D
M40.10	08	I09D I68A I68B I68C I68D
M40.11	08	I09D I68A I68B I68C I68D
M40.12	08	I09D I68A I68B I68C I68D
M40.13	08	I09D I68A I68B I68C I68D
M40.14	08	I09D I68A I68B I68C I68D
M40.15	08	I09D I68A I68B I68C I68D
M40.16	08	I09D I68A I68B I68C I68D
M40.17	08	I09D I68A I68B I68C I68D
M40.18	08	I09D I68A I68B I68C I68D
M40.19	08	I09D I68A I68B I68C I68D
M40.20	08	I09D I68A I68B I68C I68D
M40.21	08	I09D I68A I68B I68C I68D
M40.22	08	I09D I68A I68B I68C I68D
M40.23	08	I09D I68A I68B I68C I68D
M40.24	08	I09D I68A I68B I68C I68D
M40.25	08	I09D I68A I68B I68C I68D
M40.26	08	I09D I68A I68B I68C I68D
M40.27	08	I09D I68A I68B I68C I68D
M40.28	08	I09D I68A I68B I68C I68D
M40.29	08	I09D I68A I68B I68C I68D
M40.30	08	I09D I68A I68B I68C I68D
M40.31	08	I09D I68A I68B I68C I68D
M40.32	08	I09D I68A I68B I68C I68D
M40.33	08	I09D I68A I68B I68C I68D
M40.34	08	I09D I68A I68B I68C I68D
M40.35	08	I09D I68A I68B I68C I68D
M40.36	08	I09D I68A I68B I68C I68D
M40.37	08	I09D I68A I68B I68C I68D
M40.38	08	I09D I68A I68B I68C I68D
M40.39	08	I09D I68A I68B I68C I68D
M40.40	08	I09D I68A I68B I68C I68D
M40.41	08	I09D I68A I68B I68C I68D
M40.42	08	I09D I68A I68B I68C I68D
M40.43	08	I09D I68A I68B I68C I68D
M40.44	08	I09D I68A I68B I68C I68D
M40.45	08	I09D I68A I68B I68C I68D
M40.46	08	I09D I68A I68B I68C I68D
M40.47	08	I09D I68A I68B I68C I68D
M40.48	08	I09D I68A I68B I68C I68D
M40.49	08	I09D I68A I68B I68C I68D
M40.50	08	I09D I68A I68B I68C I68D
M40.51	08	I09D I68A I68B I68C I68D
M40.52	08	I09D I68A I68B I68C I68D
M40.53	08	I09D I68A I68B I68C I68D
M40.54	08	I09D I68A I68B I68C I68D
M40.55	08	I09D I68A I68B I68C I68D
M40.56	08	I09D I68A I68B I68C I68D
M40.57	08	I09D I68A I68B I68C I68D
M40.58	08	I09D I68A I68B I68C I68D
M40.59	08	I09D I68A I68B I68C I68D
M41.00	08	I02A I02B I02C I06B I09C I09D I68A I68B I68C I68D
M41.01	08	I02A I02B I02C I06B I09C I09D I68A I68B I68C I68D
M41.02	08	I02A I02B I02C I06B I09C I09D I68A I68B I68C I68D
M41.03	08	I02A I02B I02C I06B I09C I09D I68A I68B I68C I68D
M41.04	08	I02A I02B I02C I06B I09C I09D I68A I68B I68C I68D
M41.05	08	I02A I02B I02C I06B I09C I09D I68A I68B I68C I68D
M41.06	08	I02A I02B I02C I06B I09C I09D I68A I68B I68C I68D
M41.07	08	I02A I02B I02C I06B I09C I09D I68A I68B I68C I68D
M41.08	08	I02A I02B I02C I06B I09C I09D I68A I68B I68C I68D
M41.09	08	I02A I02B I02C I06B I09C I09D

ICD	MDC	DRG
		I68A I68B I68C I68D
M41.10	08	I02A I02B I02C I06B I09C I09D I68A I68B I68C I68D
M41.11	08	I02A I02B I02C I06B I09C I09D I68A I68B I68C I68D
M41.12	08	I02A I02B I02C I06B I09C I09D I68A I68B I68C I68D
M41.13	08	I02A I02B I02C I06B I09C I09D I68A I68B I68C I68D
M41.14	08	I02A I02B I02C I06B I09C I09D I68A I68B I68C I68D
M41.15	08	I02A I02B I02C I06B I09C I09D I68A I68B I68C I68D
M41.16	08	I02A I02B I02C I06B I09C I09D I68A I68B I68C I68D
M41.17	08	I02A I02B I02C I06B I09C I09D I68A I68B I68C I68D
M41.18	08	I02A I02B I02C I06B I09C I09D I68A I68B I68C I68D
M41.19	08	I02A I02B I02C I06B I09C I09D I68A I68B I68C I68D
M41.20	08	I09D I68A I68B I68C I68D
M41.21	08	I09D I68A I68B I68C I68D
M41.22	08	I09D I68A I68B I68C I68D
M41.23	08	I09D I68A I68B I68C I68D
M41.24	08	I09D I68A I68B I68C I68D
M41.25	08	I09D I68A I68B I68C I68D
M41.26	08	I09D I68A I68B I68C I68D
M41.27	08	I09D I68A I68B I68C I68D
M41.28	08	I09D I68A I68B I68C I68D
M41.29	08	I09D I68A I68B I68C I68D
M41.30	08	I09D I68A I68B I68C I68D
M41.31	08	I09D I68A I68B I68C I68D
M41.32	08	I09D I68A I68B I68C I68D
M41.33	08	I09D I68A I68B I68C I68D
M41.34	08	I09D I68A I68B I68C I68D
M41.35	08	I09D I68A I68B I68C I68D
M41.36	08	I09D I68A I68B I68C I68D
M41.37	08	I09D I68A I68B I68C I68D
M41.38	08	I09D I68A I68B I68C I68D
M41.39	08	I09D I68A I68B I68C I68D
M41.40	08	I09D I68A I68B I68C I68D
M41.41	08	I09D I68A I68B I68C I68D
M41.42	08	I09D I68A I68B I68C I68D
M41.43	08	I09D I68A I68B I68C I68D
M41.44	08	I09D I68A I68B I68C I68D
M41.45	08	I09D I68A I68B I68C I68D
M41.46	08	I09D I68A I68B I68C I68D
M41.47	08	I09D I68A I68B I68C I68D
M41.48	08	I09D I68A I68B I68C I68D
M41.49	08	I09D I68A I68B I68C I68D
M41.50	08	I09D I68A I68B I68C I68D
M41.51	08	I09D I68A I68B I68C I68D
M41.52	08	I09D I68A I68B I68C I68D
M41.53	08	I09D I68A I68B I68C I68D
M41.54	08	I09D I68A I68B I68C I68D
M41.55	08	I09D I68A I68B I68C I68D
M41.56	08	I09D I68A I68B I68C I68D
M41.57	08	I09D I68A I68B I68C I68D
M41.58	08	I09D I68A I68B I68C I68D
M41.59	08	I09D I68A I68B I68C I68D
M41.80	08	I09D I68A I68B I68C I68D
M41.81	08	I09D I68A I68B I68C I68D
M41.82	08	I09D I68A I68B I68C I68D
M41.83	08	I09D I68A I68B I68C I68D
M41.84	08	I09D I68A I68B I68C I68D
M41.85	08	I09D I68A I68B I68C I68D
M41.86	08	I09D I68A I68B I68C I68D
M41.87	08	I09D I68A I68B I68C I68D
M41.88	08	I09D I68A I68B I68C I68D
M41.89	08	I09D I68A I68B I68C I68D
M41.90	08	I09D I68A I68B I68C I68D
M41.91	08	I09D I68A I68B I68C I68D
M41.92	08	I09D I68A I68B I68C I68D
M41.93	08	I09D I68A I68B I68C I68D
M41.94	08	I09D I68A I68B I68C I68D
M41.95	08	I09D I68A I68B I68C I68D
M41.96	08	I09D I68A I68B I68C I68D
M41.97	08	I09D I68A I68B I68C I68D
M41.98	08	I09D I68A I68B I68C I68D
M41.99	08	I09D I68A I68B I68C I68D
M42.00	08	I69A I69B I69C
M42.01	08	I69A I69B I69C
M42.02	08	I69A I69B I69C
M42.03	08	I69A I69B I69C
M42.04	08	I69A I69B I69C
M42.05	08	I69A I69B I69C
M42.06	08	I69A I69B I69C
M42.07	08	I69A I69B I69C
M42.08	08	I69A I69B I69C
M42.09	08	I69A I69B I69C
M42.10	08	I69A I69B I69C
M42.11	08	I69A I69B I69C
M42.12	08	I69A I69B I69C
M42.13	08	I69A I69B I69C
M42.14	08	I69A I69B I69C
M42.15	08	I69A I69B I69C
M42.16	08	I69A I69B I69C
M42.17	08	I69A I69B I69C
M42.18	08	I69A I69B I69C
M42.19	08	I69A I69B I69C
M42.90	08	I69A I69B I69C
M42.91	08	I69A I69B I69C
M42.92	08	I69A I69B I69C
M42.93	08	I69A I69B I69C
M42.94	08	I69A I69B I69C
M42.95	08	I69A I69B I69C
M42.96	08	I69A I69B I69C
M42.97	08	I69A I69B I69C
M42.98	08	I69A I69B I69C
M42.99	08	I69A I69B I69C
M43.00	08	I68A I68B I68C I68D
M43.01	08	I68A I68B I68C I68D
M43.02	08	I68A I68B I68C I68D
M43.03	08	I68A I68B I68C I68D
M43.3	08	I68A I68B I68C I68D
M43.04	08	I68A I68B I68C I68D
M43.4	08	I68A I68B I68C I68D
M43.05	08	I68A I68B I68C I68D
M43.06	08	I68A I68B I68C I68D

DIAG

ICD	MDC	DRG
M43.6	08	I68A I68B I68C I68D
M43.07	08	I68A I68B I68C I68D
M43.08	08	I68A I68B I68C I68D
M43.09	08	I68A I68B I68C I68D
M43.10	08	I68A I68B I68C I68D
M43.11	08	I68A I68B I68C I68D
M43.12	08	I68A I68B I68C I68D
M43.13	08	I68A I68B I68C I68D
M43.14	08	I68A I68B I68C I68D
M43.15	08	I68A I68B I68C I68D
M43.16	08	I68A I68B I68C I68D
M43.17	08	I68A I68B I68C I68D
M43.18	08	I68A I68B I68C I68D
M43.19	08	I68A I68B I68C I68D
M43.20	08	I68A I68B I68C I68D
M43.21	08	I68A I68B I68C I68D
M43.22	08	I68A I68B I68C I68D
M43.23	08	I68A I68B I68C I68D
M43.24	08	I68A I68B I68C I68D
M43.25	08	I68A I68B I68C I68D
M43.26	08	I68A I68B I68C I68D
M43.27	08	I68A I68B I68C I68D
M43.28	08	I68A I68B I68C I68D
M43.29	08	I68A I68B I68C I68D
M43.50	08	I68A I68B I68C I68D
M43.52	08	I68A I68B I68C I68D
M43.53	08	I68A I68B I68C I68D
M43.54	08	I68A I68B I68C I68D
M43.55	08	I68A I68B I68C I68D
M43.56	08	I68A I68B I68C I68D
M43.57	08	I68A I68B I68C I68D
M43.58	08	I68A I68B I68C I68D
M43.59	08	I68A I68B I68C I68D
M43.80	08	I68A I68B I68C I68D
M43.81	08	I68A I68B I68C I68D
M43.82	08	I68A I68B I68C I68D
M43.83	08	I68A I68B I68C I68D
M43.84	08	I68A I68B I68C I68D
M43.85	08	I68A I68B I68C I68D
M43.86	08	I68A I68B I68C I68D
M43.87	08	I68A I68B I68C I68D
M43.88	08	I68A I68B I68C I68D
M43.89	08	I68A I68B I68C I68D
M43.90	08	I68A I68B I68C I68D
M43.91	08	I68A I68B I68C I68D
M43.92	08	I68A I68B I68C I68D
M43.93	08	I68A I68B I68C I68D
M43.94	08	I68A I68B I68C I68D
M43.95	08	I68A I68B I68C I68D
M43.96	08	I68A I68B I68C I68D
M43.97	08	I68A I68B I68C I68D
M43.98	08	I68A I68B I68C I68D
M43.99	08	I68A I68B I68C I68D
M45.00	Prä	B61B B61C B61D
	02	C60A C61A
	05	F62A
	08	I02A I02B I02C I08A I08B I12A I12B I12C I13A I13B I66A I66B I66C
M45.01	Prä	B61B B61C B61D
	02	C60A C61A
	05	F62A
	08	I02A I02B I02C I08A I08B I12A I12B I12C I13A I13B I66A I66B I66C
M45.02	Prä	B61B B61C B61D
	02	C60A C61A
	05	F62A
	08	I02A I02B I02C I08A I08B I12A I12B I12C I13A I13B I66A I66B I66C
M45.03	Prä	B61B B61C B61D
	02	C60A C61A
	05	F62A
	08	I02A I02B I02C I08A I08B I12A I12B I12C I13A I13B I66A I66B I66C
M45.04	02	C60A C61A
	05	F62A
	08	I02A I02B I02C I08A I08B I13A I13B I66A I66B I66C
M45.05	Prä	B61B B61C B61D
	02	C60A C61A
	05	F62A
	08	I02A I02B I02C I08A I08B I12A I12B I12C I13A I13B I66A I66B I66C
M45.06	Prä	B61B B61C B61D
	02	C60A C61A
	05	F62A
	08	I02A I02B I02C I08A I08B I12A I12B I12C I13A I13B I66A I66B I66C
M45.07	02	C60A C61A
	05	F62A
	08	I02A I02B I02C I08A I08B I13A I13B I66A I66B I66C
M45.08	02	C60A C61A
	05	F62A
	08	I02A I02B I02C I08A I08B I13A I13B I66A I66B I66C
M45.09	02	C60A C61A
	05	F62A
	08	I02A I02B I02C I08A I08B I13A I13B I66A I66B I66C
M46.00	08	I68A I68B I68C I68D
M46.01	08	I68A I68B I68C I68D
M46.1	08	I68A I68B I68C I68D
M46.02	08	I68A I68B I68C I68D
M46.03	08	I68A I68B I68C I68D
M46.04	08	I68A I68B I68C I68D
M46.05	08	I68A I68B I68C I68D
M46.06	08	I68A I68B I68C I68D
M46.07	08	I68A I68B I68C I68D
M46.08	08	I68A I68B I68C I68D
M46.09	08	I68A I68B I68C I68D
M46.20	08	I02A I02B I02C I08A I08B I12A I12B I12C I13A I13B I64A I64B
	15	MSPNG SPNG
	Prä	B61B B61C B61D
M46.21	08	I02A I02B I02C I08A I08B I12A I12B I12C I13A I13B I64A I64B

ICD	MDC	DRG
	15 Prä	MSPNG SPNG B61B B61C B61D
M46.22	08	I02A I02B I02C I08A I08B I12A I12B I12C I13A I13B I64A I64B
	15 Prä	MSPNG SPNG B61B B61C B61D
M46.23	08	I02A I02B I02C I08A I08B I12A I12B I12C I13A I13B I64A I64B
	15 Prä	MSPNG SPNG B61B B61C B61D
M46.24	08	I02A I02B I02C I08A I08B I13A I13B I64A I64B
	15	MSPNG SPNG
M46.25	08	I02A I02B I02C I08A I08B I12A I12B I12C I13A I13B I64A I64B
	15 Prä	MSPNG SPNG B61B B61C B61D
M46.26	08	I02A I02B I02C I08A I08B I12A I12B I12C I13A I13B I64A I64B
	15 Prä	MSPNG SPNG B61B B61C B61D
M46.27	08	I02A I02B I02C I08A I08B I13A I13B I64A I64B
	15	MSPNG SPNG
M46.28	08	I02A I02B I02C I08A I08B I13A I13B I64A I64B
	15	MSPNG SPNG
M46.29	08	I02A I02B I02C I08A I08B I13A I13B I64A I64B
	15	MSPNG SPNG
M46.30	08	I76A I76B
M46.31	08	I76A I76B
M46.32	08	I76A I76B
M46.33	08	I76A I76B
M46.34	08	I76A I76B
M46.35	08	I76A I76B
M46.36	08	I76A I76B
M46.37	08	I76A I76B
M46.38	08	I76A I76B
M46.39	08	I76A I76B
M46.40	08	I68A I68B I68C I68D
M46.41	08	I68A I68B I68C I68D
M46.42	08	I68A I68B I68C I68D
M46.43	08	I68A I68B I68C I68D
M46.44	08	I68A I68B I68C I68D
M46.45	08	I68A I68B I68C I68D
M46.46	08	I68A I68B I68C I68D
M46.47	08	I68A I68B I68C I68D
M46.48	08	I68A I68B I68C I68D
M46.49	08	I68A I68B I68C I68D
M46.50	08	I68A I68B I68C I68D
M46.51	08	I68A I68B I68C I68D
M46.52	08	I68A I68B I68C I68D
M46.53	08	I68A I68B I68C I68D
M46.54	08	I68A I68B I68C I68D
M46.55	08	I68A I68B I68C I68D
M46.56	08	I68A I68B I68C I68D
M46.57	08	I68A I68B I68C I68D
M46.58	08	I68A I68B I68C I68D
M46.59	08	I68A I68B I68C I68D
M46.80	08	I68A I68B I68C I68D
M46.81	08	I68A I68B I68C I68D
M46.82	08	I68A I68B I68C I68D
M46.83	08	I68A I68B I68C I68D
M46.84	08	I68A I68B I68C I68D
M46.85	08	I68A I68B I68C I68D
M46.86	08	I68A I68B I68C I68D
M46.87	08	I68A I68B I68C I68D
M46.88	08	I68A I68B I68C I68D
M46.89	08	I68A I68B I68C I68D
M46.90	08	I68A I68B I68C I68D
M46.91	08	I68A I68B I68C I68D
M46.92	08	I68A I68B I68C I68D
M46.93	08	I68A I68B I68C I68D
M46.94	08	I68A I68B I68C I68D
M46.95	08	I68A I68B I68C I68D
M46.96	08	I68A I68B I68C I68D
M46.97	08	I68A I68B I68C I68D
M46.98	08	I68A I68B I68C I68D
M46.99	08	I68A I68B I68C I68D
M47.00	08	I68A I68B I68C I68D
M47.01	08	I68A I68B I68C I68D
M47.02	08	I68A I68B I68C I68D
M47.03	08	I68A I68B I68C I68D
M47.04	08	I68A I68B I68C I68D
M47.05	08	I68A I68B I68C I68D
M47.06	08	I68A I68B I68C I68D
M47.07	08	I68A I68B I68C I68D
M47.08	08	I68A I68B I68C I68D
M47.09	08	I68A I68B I68C I68D
M47.10	08	I68A I68B I68C I68D
M47.11	08	I68A I68B I68C I68D
M47.12	08	I68A I68B I68C I68D
M47.13	08	I68A I68B I68C I68D
M47.14	08	I68A I68B I68C I68D
M47.15	08	I68A I68B I68C I68D
M47.16	08	I68A I68B I68C I68D
M47.17	08	I68A I68B I68C I68D
M47.18	08	I68A I68B I68C I68D
M47.19	08	I68A I68B I68C I68D
M47.20	08	I68A I68B I68C I68D
M47.21	08	I68A I68B I68C I68D
M47.22	08	I68A I68B I68C I68D
M47.23	08	I68A I68B I68C I68D
M47.24	08	I68A I68B I68C I68D
M47.25	08	I68A I68B I68C I68D
M47.26	08	I68A I68B I68C I68D
M47.27	08	I68A I68B I68C I68D
M47.28	08	I68A I68B I68C I68D
M47.29	08	I68A I68B I68C I68D
M47.80	08	I68A I68B I68C I68D
M47.81	08	I68A I68B I68C I68D
M47.82	08	I68A I68B I68C I68D
M47.83	08	I68A I68B I68C I68D
M47.84	08	I68A I68B I68C I68D
M47.85	08	I68A I68B I68C I68D
M47.86	08	I68A I68B I68C I68D
M47.87	08	I68A I68B I68C I68D
M47.88	08	I68A I68B I68C I68D

DIAG

ICD	MDC	DRG
M47.89	08	I68A I68B I68C I68D
M47.90	08	I68A I68B I68C I68D
M47.91	08	I68A I68B I68C I68D
M47.92	08	I68A I68B I68C I68D
M47.93	08	I68A I68B I68C I68D
M47.94	08	I68A I68B I68C I68D
M47.95	08	I68A I68B I68C I68D
M47.96	08	I68A I68B I68C I68D
M47.97	08	I68A I68B I68C I68D
M47.98	08	I68A I68B I68C I68D
M47.99	08	I68A I68B I68C I68D
M48.00	08	I68A I68B I68C I68D
M48.01	08	I68A I68B I68C I68D
M48.02	08	I68A I68B I68C I68D
M48.03	08	I68A I68B I68C I68D
M48.04	08	I68A I68B I68C I68D
M48.05	08	I68A I68B I68C I68D
M48.06	08	I68A I68B I68C I68D
M48.07	08	I68A I68B I68C I68D
M48.08	08	I68A I68B I68C I68D
M48.09	08	I68A I68B I68C I68D
M48.10	08	I68A I68B I68C I68D
M48.11	08	I68A I68B I68C I68D
M48.12	08	I68A I68B I68C I68D
M48.13	08	I68A I68B I68C I68D
M48.14	08	I68A I68B I68C I68D
M48.15	08	I68A I68B I68C I68D
M48.16	08	I68A I68B I68C I68D
M48.17	08	I68A I68B I68C I68D
M48.18	08	I68A I68B I68C I68D
M48.19	08	I68A I68B I68C I68D
M48.20	08	I68A I68B I68C I68D
M48.21	08	I68A I68B I68C I68D
M48.22	08	I68A I68B I68C I68D
M48.23	08	I68A I68B I68C I68D
M48.24	08	I68A I68B I68C I68D
M48.25	08	I68A I68B I68C I68D
M48.26	08	I68A I68B I68C I68D
M48.27	08	I68A I68B I68C I68D
M48.28	08	I68A I68B I68C I68D
M48.29	08	I68A I68B I68C I68D
M48.30	08	I68A I68B I68C I68D
M48.31	08	I68A I68B I68C I68D
M48.32	08	I68A I68B I68C I68D
M48.33	08	I68A I68B I68C I68D
M48.34	08	I68A I68B I68C I68D
M48.35	08	I68A I68B I68C I68D
M48.36	08	I68A I68B I68C I68D
M48.37	08	I68A I68B I68C I68D
M48.38	08	I68A I68B I68C I68D
M48.39	08	I68A I68B I68C I68D
M48.40	08	I65A I65B
	15	MSPNG SPNG
	Prä	A11C
M48.41	08	I65A I65B
	15	MSPNG SPNG
	Prä	A11C
M48.42	08	I65A I65B
	15	MSPNG SPNG
	Prä	A11C
M48.43	08	I65A I65B
	15	MSPNG SPNG
	Prä	A11C
M48.44	08	I65A I65B
	15	MSPNG SPNG
	Prä	A11C
M48.45	08	I65A I65B
	15	MSPNG SPNG
M48.46	08	I65A I65B
	15	MSPNG SPNG
M48.47	08	I65A I65B
	15	MSPNG SPNG
M48.48	08	I65A I65B
	15	MSPNG SPNG
M48.49	08	I65A I65B
	15	MSPNG SPNG
M48.50	08	I65A I65B
	15	MSPNG SPNG
M48.51	08	I65A I65B
	15	MSPNG SPNG
M48.52	08	I65A I65B
	15	MSPNG SPNG
M48.53	08	I65A I65B
	15	MSPNG SPNG
M48.54	08	I65A I65B
	15	MSPNG SPNG
M48.55	08	I65A I65B
	15	MSPNG SPNG
M48.56	08	I65A I65B
	15	MSPNG SPNG
M48.57	08	I65A I65B
	15	MSPNG SPNG
M48.58	08	I65A I65B
	15	MSPNG SPNG
M48.59	08	I65A I65B
	15	MSPNG SPNG
M48.80	08	I68A I68B I68C I68D
M48.81	08	I68A I68B I68C I68D
M48.82	08	I68A I68B I68C I68D
M48.83	08	I68A I68B I68C I68D
M48.84	08	I68A I68B I68C I68D
M48.85	08	I68A I68B I68C I68D
M48.86	08	I68A I68B I68C I68D
M48.87	08	I68A I68B I68C I68D
M48.88	08	I68A I68B I68C I68D
M48.89	08	I68A I68B I68C I68D
M48.90	08	I68A I68B I68C I68D
M48.91	08	I68A I68B I68C I68D
M48.92	08	I68A I68B I68C I68D
M48.93	08	I68A I68B I68C I68D
M48.94	08	I68A I68B I68C I68D
M48.95	08	I68A I68B I68C I68D
M48.96	08	I68A I68B I68C I68D
M48.97	08	I68A I68B I68C I68D
M48.98	08	I68A I68B I68C I68D
M48.99	08	I68A I68B I68C I68D
M49.00	Prä	961Z
M49.01	Prä	961Z
M49.02	Prä	961Z
M49.03	Prä	961Z
M49.04	Prä	961Z
M49.05	Prä	961Z
M49.06	Prä	961Z
M49.07	Prä	961Z
M49.08	Prä	961Z
M49.09	Prä	961Z
M49.10	Prä	961Z
M49.11	Prä	961Z
M49.12	Prä	961Z
M49.13	Prä	961Z
M49.14	Prä	961Z
M49.15	Prä	961Z
M49.16	Prä	961Z
M49.17	Prä	961Z
M49.18	Prä	961Z
M49.19	Prä	961Z
M49.20	Prä	961Z
M49.21	Prä	961Z
M49.22	Prä	961Z

ICD	MDC	DRG
M49.23	Prä	961Z
M49.24	Prä	961Z
M49.25	Prä	961Z
M49.26	Prä	961Z
M49.27	Prä	961Z
M49.28	Prä	961Z
M49.29	Prä	961Z
M49.30	Prä	961Z
M49.31	Prä	961Z
M49.32	Prä	961Z
M49.33	Prä	961Z
M49.34	Prä	961Z
M49.35	Prä	961Z
M49.36	Prä	961Z
M49.37	Prä	961Z
M49.38	Prä	961Z
M49.39	Prä	961Z
M49.40	Prä	961Z
M49.41	Prä	961Z
M49.42	Prä	961Z
M49.43	Prä	961Z
M49.44	Prä	961Z
M49.45	Prä	961Z
M49.46	Prä	961Z
M49.47	Prä	961Z
M49.48	Prä	961Z
M49.49	Prä	961Z
M49.50	15	MSPNG SPNG
	Prä	961Z
M49.51	15	MSPNG SPNG
	Prä	961Z
M49.52	15	MSPNG SPNG
	Prä	961Z
M49.53	15	MSPNG SPNG
	Prä	961Z
M49.54	15	MSPNG SPNG
	Prä	961Z
M49.55	15	MSPNG SPNG
	Prä	961Z
M49.56	15	MSPNG SPNG
	Prä	961Z
M49.57	15	MSPNG SPNG
	Prä	961Z
M49.58	15	MSPNG SPNG
	Prä	961Z
M49.59	15	MSPNG SPNG
	Prä	961Z
M49.80	Prä	961Z
M49.81	Prä	961Z
M49.82	Prä	961Z
M49.83	Prä	961Z
M49.84	Prä	961Z
M49.85	Prä	961Z
M49.86	Prä	961Z
M49.87	Prä	961Z
M49.88	Prä	961Z
M49.89	Prä	961Z
M50.0	08	I68A I68B I68C
		I68D
M50.1	08	I68A I68B I68C
		I68D
M50.2	08	I68A I68B I68C
		I68D
M50.3	08	I68A I68B I68C
		I68D
M50.8	08	I68A I68B I68C
		I68D
M50.9	08	I68A I68B I68C
		I68D
M51.0	08	I68A I68B I68C
		I68D
M51.1	08	I68A I68B I68C
		I68D
M51.2	08	I68A I68B I68C
		I68D
M51.3	08	I68A I68B I68C
		I68D
M51.4	08	I68A I68B I68C
		I68D
M51.8	08	I68A I68B I68C
		I68D
M51.9	08	I68A I68B I68C
		I68D
M53.0	01	B03A B03B B03C
		B71A B71B B71C
M53.1	01	B03A B03B B03C
		B71A B71B B71C
M53.3	08	I68A I68B I68C
		I68D
	15	MSPNG SPNG
M53.20	08	I68A I68B I68C
		I68D
M53.21	08	I68A I68B I68C
		I68D
M53.22	08	I68A I68B I68C
		I68D
M53.23	08	I68A I68B I68C
		I68D
M53.24	08	I68A I68B I68C
		I68D
M53.25	08	I68A I68B I68C
		I68D
M53.26	08	I68A I68B I68C
		I68D
M53.27	08	I68A I68B I68C
		I68D
M53.28	08	I68A I68B I68C
		I68D
M53.29	08	I68A I68B I68C
		I68D
M53.80	08	I68A I68B I68C
		I68D
M53.81	08	I68A I68B I68C
		I68D
M53.82	08	I68A I68B I68C
		I68D
M53.83	08	I68A I68B I68C
		I68D
M53.84	08	I68A I68B I68C
		I68D
M53.85	08	I68A I68B I68C
		I68D
M53.86	08	I68A I68B I68C
		I68D
M53.87	08	I68A I68B I68C
		I68D
M53.88	08	I68A I68B I68C
		I68D
M53.89	08	I68A I68B I68C
		I68D
M53.90	08	I68A I68B I68C
		I68D
M53.91	08	I68A I68B I68C
		I68D
M53.92	08	I68A I68B I68C
		I68D
M53.93	08	I68A I68B I68C
		I68D
M53.94	08	I68A I68B I68C
		I68D
M53.95	08	I68A I68B I68C
		I68D
M53.96	08	I68A I68B I68C
		I68D
M53.97	08	I68A I68B I68C
		I68D
M53.98	08	I68A I68B I68C
		I68D
M53.99	08	I68A I68B I68C
		I68D
M54.00	09	J61A J61B J61C
		J61D
M54.01	09	J61A J61B J61C
		J61D
M54.02	09	J61A J61B J61C
		J61D
M54.2	08	I68A I68B I68C
		I68D
M54.03	08	I68A I68B I68C
		I68D
M54.3	08	I68A I68B I68C
		I68D
M54.04	08	I68A I68B I68C
		I68D
M54.4	08	I68A I68B I68C
		I68D
M54.05	08	I68A I68B I68C
		I68D
M54.5	08	I68A I68B I68C
		I68D
M54.06	08	I68A I68B I68C
		I68D
M54.6	08	I68A I68B I68C
		I68D
M54.07	08	I68A I68B I68C
		I68D
M54.08	08	I68A I68B I68C
		I68D
M54.09	08	I68A I68B I68C
		I68D
M54.10	01	B03A B03B B03C
		B71A B71B B71C
M54.11	01	B03A B03B B03C
		B71A B71B B71C
M54.12	01	B03A B03B B03C
		B71A B71B B71C
M54.13	01	B03A B03B B03C
		B71A B71B B71C
M54.14	08	I68A I68B I68C
		I68D
M54.15	08	I68A I68B I68C
		I68D
M54.16	08	I68A I68B I68C
		I68D
M54.17	08	I68A I68B I68C
		I68D
M54.18	08	I68A I68B I68C
		I68D
M54.19	01	B03A B03B B03C
		B71A B71B B71C
M54.80	08	I68A I68B I68C
		I68D
M54.81	08	I68A I68B I68C
		I68D
M54.82	08	I68A I68B I68C
		I68D
M54.83	08	I68A I68B I68C
		I68D
M54.84	08	I68A I68B I68C
		I68D

DIAG

ICD	MDC	DRG
M54.85	08	I68A I68B I68C I68D
M54.86	08	I68A I68B I68C I68D
M54.87	08	I68A I68B I68C I68D
M54.88	08	I68A I68B I68C I68D
M54.89	08	I68A I68B I68C I68D
M54.90	08	I68A I68B I68C I68D
M54.91	08	I68A I68B I68C I68D
M54.92	08	I68A I68B I68C I68D
M54.93	08	I68A I68B I68C I68D
M54.94	08	I68A I68B I68C I68D
M54.95	08	I68A I68B I68C I68D
M54.96	08	I68A I68B I68C I68D
M54.97	08	I68A I68B I68C I68D
M54.98	08	I68A I68B I68C I68D
M54.99	08	I68A I68B I68C I68D
M60.00	08	I72Z I75A I75B I75C
M60.01	08	I72Z I75A I75B I75C
M60.02	08	I72Z I75A I75B I75C
M60.03	08	I72Z I75A I75B I75C
M60.04	08	I72Z I75A I75B I75C
M60.05	08	I72Z I75A I75B I75C
M60.06	08	I72Z I75A I75B I75C
M60.07	08	I72Z I75A I75B I75C
M60.08	08	I72Z I75A I75B I75C
M60.09	08	I72Z I75A I75B I75C
M60.10	08	I72Z I75A I75B I75C
M60.11	08	I72Z I75A I75B I75C
M60.12	08	I72Z I75A I75B I75C
M60.13	08	I72Z I75A I75B I75C
M60.14	08	I72Z I75A I75B I75C
M60.15	08	I72Z I75A I75B I75C
	15	MSPNG SPNG
M60.16	08	I72Z I75A I75B I75C
M60.17	08	I72Z I75A I75B I75C
M60.18	08	I72Z I75A I75B I75C
M60.19	08	I72Z I75A I75B I75C
M60.20	08	I72Z I75A I75B I75C
M60.21	08	I72Z I75A I75B I75C
M60.22	08	I72Z I75A I75B I75C
M60.23	08	I72Z I75A I75B I75C
M60.24	08	I72Z I75A I75B I75C
M60.25	08	I72Z I75A I75B I75C
M60.26	08	I72Z I75A I75B I75C
M60.27	08	I72Z I75A I75B I75C
M60.28	08	I72Z I75A I75B I75C
M60.29	08	I72Z I75A I75B I75C
M60.80	08	I71A I71B
M60.81	08	I71A I71B
M60.82	08	I71A I71B
M60.83	08	I71A I71B
M60.84	08	I71A I71B
M60.85	08	I71A I71B
M60.86	08	I71A I71B
M60.87	08	I71A I71B
M60.88	08	I71A I71B
M60.89	08	I71A I71B
M60.90	08	I71A I71B
M60.91	08	I71A I71B
M60.92	08	I71A I71B
M60.93	08	I71A I71B
M60.94	08	I71A I71B
M60.95	08	I71A I71B
M60.96	08	I71A I71B
M60.97	08	I71A I71B
M60.98	08	I71A I71B
M60.99	08	I71A I71B
M61.00	08	I72Z I75A I75B I75C
M61.01	08	I72Z I75A I75B I75C
M61.02	08	I72Z I75A I75B I75C
M61.03	08	I72Z I75A I75B I75C
M61.04	08	I72Z I75A I75B I75C
M61.05	08	I72Z I75A I75B I75C
M61.06	08	I72Z I75A I75B I75C
M61.07	08	I72Z I75A I75B I75C
M61.08	08	I72Z I75A I75B I75C
M61.09	08	I72Z I75A I75B I75C
M61.10	08	I72Z I75A I75B I75C
M61.11	08	I72Z I75A I75B I75C
M61.12	08	I72Z I75A I75B I75C
M61.13	08	I72Z I75A I75B I75C
M61.14	08	I72Z I75A I75B I75C
M61.15	08	I72Z I75A I75B I75C
M61.16	08	I72Z I75A I75B I75C
M61.17	08	I72Z I75A I75B I75C
M61.18	08	I72Z I75A I75B I75C
M61.19	08	I72Z I75A I75B I75C
M61.20	08	I72Z I75A I75B I75C
M61.21	08	I72Z I75A I75B I75C
M61.22	08	I72Z I75A I75B I75C
M61.23	08	I72Z I75A I75B I75C
M61.24	08	I72Z I75A I75B I75C
M61.25	08	I72Z I75A I75B I75C
M61.26	08	I72Z I75A I75B I75C
M61.27	08	I72Z I75A I75B I75C
M61.28	08	I72Z I75A I75B I75C
M61.29	08	I72Z I75A I75B I75C
M61.30	08	I72Z I75A I75B I75C
M61.31	08	I72Z I75A I75B I75C
M61.32	08	I72Z I75A I75B I75C
M61.33	08	I72Z I75A I75B I75C
M61.34	08	I72Z I75A I75B I75C
M61.35	08	I72Z I75A I75B I75C
M61.36	08	I72Z I75A I75B I75C
M61.37	08	I72Z I75A I75B I75C
M61.38	08	I72Z I75A I75B I75C
M61.39	08	I72Z I75A I75B I75C
M61.40	08	I72Z I75A I75B I75C
M61.41	08	I72Z I75A I75B I75C
M61.42	08	I72Z I75A I75B I75C
M61.43	08	I72Z I75A I75B I75C
M61.44	08	I72Z I75A I75B I75C
M61.45	08	I72Z I75A I75B I75C
M61.46	08	I72Z I75A I75B I75C
M61.47	08	I72Z I75A I75B I75C
M61.48	08	I72Z I75A I75B I75C
M61.49	08	I72Z I75A I75B

ICD	MDC	DRG
		I75C
M61.50	08	I72Z I75A I75B I75C
M61.51	08	I72Z I75A I75B I75C
M61.52	08	I72Z I75A I75B I75C
M61.53	08	I72Z I75A I75B I75C
M61.54	08	I72Z I75A I75B I75C
M61.55	08	I72Z I75A I75B I75C
M61.56	08	I72Z I75A I75B I75C
M61.57	08	I72Z I75A I75B I75C
M61.58	08	I72Z I75A I75B I75C
M61.59	08	I72Z I75A I75B I75C
M61.90	08	I72Z I75A I75B I75C
M61.91	08	I72Z I75A I75B I75C
M61.92	08	I72Z I75A I75B I75C
M61.93	08	I72Z I75A I75B I75C
M61.94	08	I72Z I75A I75B I75C
M61.95	08	I72Z I75A I75B I75C
M61.96	08	I72Z I75A I75B I75C
M61.97	08	I72Z I75A I75B I75C
M61.98	08	I72Z I75A I75B I75C
M61.99	08	I72Z I75A I75B I75C
M62.00	08	I72Z I75A I75B I75C
M62.01	08	I72Z I75A I75B I75C
M62.02	08	I72Z I75A I75B I75C
M62.03	08	I72Z I75A I75B I75C
M62.04	08	I72Z I75A I75B I75C
M62.05	08	I72Z I75A I75B I75C
M62.06	08	I72Z I75A I75B I75C
M62.07	08	I72Z I75A I75B I75C
M62.08	06	G09E G09F
	08	I72Z I75A I75B I75C
M62.09	08	I72Z I75A I75B I75C
M62.10	08	I72Z I75A I75B I75C
M62.11	08	I72Z I75A I75B I75C
M62.12	08	I72Z I75A I75B I75C
M62.13	08	I72Z I75A I75B I75C
M62.14	08	I72Z I75A I75B I75C
M62.15	08	I72Z I75A I75B I75C
M62.16	08	I72Z I75A I75B I75C
M62.17	08	I72Z I75A I75B I75C
M62.18	08	I72Z I75A I75B I75C
M62.19	08	I72Z I75A I75B I75C
M62.20	08	I72Z I75A I75B I75C
M62.21	08	I72Z I75A I75B I75C
M62.22	08	I72Z I75A I75B I75C
M62.23	08	I72Z I75A I75B I75C
M62.24	08	I72Z I75A I75B I75C
M62.25	08	I72Z I75A I75B I75C
M62.26	08	I72Z I75A I75B I75C
M62.27	08	I72Z I75A I75B I75C
M62.28	08	I72Z I75A I75B I75C
M62.29	08	I72Z I75A I75B I75C
M62.30	08	I72Z I75A I75B I75C
M62.31	08	I72Z I75A I75B I75C
M62.32	08	I72Z I75A I75B I75C
M62.33	08	I72Z I75A I75B I75C
M62.34	08	I72Z I75A I75B I75C
M62.35	08	I72Z I75A I75B I75C
M62.36	08	I72Z I75A I75B I75C
M62.37	08	I72Z I75A I75B I75C
M62.38	08	I72Z I75A I75B I75C
M62.39	08	I72Z I75A I75B I75C
M62.40	08	I71A I71B
M62.41	08	I71A I71B
M62.42	08	I71A I71B
M62.43	08	I71A I71B
M62.44	08	I71A I71B
M62.45	08	I71A I71B
M62.46	08	I71A I71B
M62.47	08	I71A I71B
M62.48	08	I71A I71B
M62.49	08	I71A I71B
M62.50	08	I72Z I75A I75B I75C
M62.51	08	I72Z I75A I75B I75C
M62.52	08	I72Z I75A I75B I75C
M62.53	08	I72Z I75A I75B I75C
M62.54	08	I72Z I75A I75B I75C
M62.55	08	I72Z I75A I75B I75C
M62.56	08	I72Z I75A I75B I75C
M62.57	08	I72Z I75A I75B I75C
M62.58	08	I72Z I75A I75B I75C
M62.59	08	I72Z I75A I75B I75C
M62.60	08	I72Z I75A I75B I75C
M62.61	08	I72Z I75A I75B I75C
M62.62	08	I72Z I75A I75B I75C
M62.63	08	I72Z I75A I75B I75C
M62.64	08	I72Z I75A I75B I75C
M62.65	08	I72Z I75A I75B I75C
M62.66	08	I72Z I75A I75B I75C
M62.67	08	I72Z I75A I75B I75C
M62.68	08	I72Z I75A I75B I75C
M62.69	08	I72Z I75A I75B I75C
M62.80	08	I72Z I75A I75B I75C
M62.81	08	I72Z I75A I75B I75C
M62.82	08	I72Z I75A I75B I75C
M62.83	08	I72Z I75A I75B I75C
M62.84	08	I72Z I75A I75B I75C
M62.85	08	I72Z I75A I75B I75C
M62.86	08	I72Z I75A I75B I75C
M62.87	08	I72Z I75A I75B I75C
M62.88	08	I72Z I75A I75B I75C
M62.89	08	I72Z I75A I75B I75C
M62.90	08	I72Z I75A I75B I75C
M62.91	08	I72Z I75A I75B I75C
M62.92	08	I72Z I75A I75B I75C
M62.93	08	I72Z I75A I75B I75C
M62.94	08	I72Z I75A I75B I75C
M62.95	08	I72Z I75A I75B I75C
M62.96	08	I72Z I75A I75B I75C
M62.97	08	I72Z I75A I75B I75C
M62.98	08	I72Z I75A I75B I75C

DIAG

ICD	MDC	DRG
M62.99	08	I72Z I75A I75B I75C
M63.00	Prä	961Z
M63.01	Prä	961Z
M63.02	Prä	961Z
M63.03	Prä	961Z
M63.04	Prä	961Z
M63.05	Prä	961Z
M63.06	Prä	961Z
M63.07	Prä	961Z
M63.08	Prä	961Z
M63.09	Prä	961Z
M63.10	Prä	961Z
M63.11	Prä	961Z
M63.12	Prä	961Z
M63.13	Prä	961Z
M63.14	Prä	961Z
M63.15	Prä	961Z
M63.16	Prä	961Z
M63.17	Prä	961Z
M63.18	Prä	961Z
M63.19	Prä	961Z
M63.20	Prä	961Z
M63.21	Prä	961Z
M63.22	Prä	961Z
M63.23	Prä	961Z
M63.24	Prä	961Z
M63.25	Prä	961Z
M63.26	Prä	961Z
M63.27	Prä	961Z
M63.28	Prä	961Z
M63.29	Prä	961Z
M63.30	Prä	961Z
M63.31	Prä	961Z
M63.32	Prä	961Z
M63.33	Prä	961Z
M63.34	Prä	961Z
M63.35	Prä	961Z
M63.36	Prä	961Z
M63.37	Prä	961Z
M63.38	Prä	961Z
M63.39	Prä	961Z
M63.80	Prä	961Z
M63.81	Prä	961Z
M63.82	Prä	961Z
M63.83	Prä	961Z
M63.84	Prä	961Z
M63.85	Prä	961Z
M63.86	Prä	961Z
M63.87	Prä	961Z
M63.88	Prä	961Z
M63.89	Prä	961Z
M65.00	08	I72Z I75A I75B I75C
M65.01	08	I72Z I75A I75B I75C
M65.02	08	I72Z I75A I75B I75C
M65.03	08	I72Z I75A I75B I75C
M65.3	08	I72Z I75A I75B I75C
M65.04	08	I72Z I75A I75B I75C
M65.4	08	I72Z I75A I75B I75C
M65.05	08	I72Z I75A I75B I75C
M65.06	08	I72Z I75A I75B I75C
M65.07	08	I72Z I75A I75B I75C
M65.08	08	I72Z I75A I75B I75C
M65.09	08	I72Z I75A I75B I75C
M65.10	08	I72Z I75A I75B I75C
M65.11	08	I72Z I75A I75B I75C
M65.12	08	I72Z I75A I75B I75C
M65.13	08	I72Z I75A I75B I75C
M65.14	08	I72Z I75A I75B I75C
M65.15	08	I72Z I75A I75B I75C
M65.16	08	I72Z I75A I75B I75C
M65.17	08	I72Z I75A I75B I75C
M65.18	08	I72Z I75A I75B I75C
M65.19	08	I72Z I75A I75B I75C
M65.20	08	I72Z I75A I75B I75C
M65.22	08	I72Z I75A I75B I75C
M65.23	08	I72Z I75A I75B I75C
M65.24	08	I72Z I75A I75B I75C
M65.25	08	I72Z I75A I75B I75C
M65.26	08	I72Z I75A I75B I75C
M65.27	08	I72Z I75A I75B I75C
M65.28	08	I72Z I75A I75B I75C
M65.29	08	I72Z I75A I75B I75C
M65.80	08	I72Z I75A I75B I75C
M65.81	08	I72Z I75A I75B I75C
M65.82	08	I72Z I75A I75B I75C
M65.83	08	I72Z I75A I75B I75C
M65.84	08	I02A I02B I02C I32A I32B I32C I32D I32E I32F I72Z I75A I75B I75C
M65.85	08	I72Z I75A I75B I75C
M65.86	08	I72Z I75A I75B I75C
M65.87	08	I72Z I75A I75B I75C
M65.88	08	I72Z I75A I75B I75C
M65.89	08	I72Z I75A I75B I75C
M65.90	08	I72Z I75A I75B I75C
M65.91	08	I72Z I75A I75B I75C
M65.92	08	I72Z I75A I75B I75C
M65.93	08	I72Z I75A I75B I75C
M65.94	08	I72Z I75A I75B I75C
M65.95	08	I72Z I75A I75B I75C
M65.96	08	I72Z I75A I75B I75C
M65.97	08	I72Z I75A I75B I75C
M65.98	08	I72Z I75A I75B I75C
M65.99	08	I72Z I75A I75B I75C
M66.0	08	I72Z I75A I75B I75C
M66.10	08	I72Z I75A I75B I75C
M66.11	08	I72Z I75A I75B I75C
M66.12	08	I72Z I75A I75B I75C
M66.13	08	I72Z I75A I75B I75C
M66.14	08	I72Z I75A I75B I75C
M66.15	08	I72Z I75A I75B I75C
M66.16	08	I72Z I75A I75B I75C
M66.17	08	I72Z I75A I75B I75C
M66.18	08	I72Z I75A I75B I75C
M66.19	08	I72Z I75A I75B I75C
M66.20	08	I72Z I75A I75B I75C
M66.21	08	I72Z I75A I75B I75C
M66.22	08	I72Z I75A I75B I75C
M66.23	08	I72Z I75A I75B I75C
M66.24	08	I02A I02B I02C I32A I32B I32C I32D I32E I32F I72Z I75A I75B I75C
M66.25	08	I72Z I75A I75B I75C
M66.26	08	I72Z I75A I75B I75C
M66.27	08	I72Z I75A I75B I75C
M66.28	08	I72Z I75A I75B I75C
M66.29	08	I72Z I75A I75B I75C
M66.30	08	I02A I02B I02C I32A I32B I32C I32D I32E I32F I72Z I75A I75B I75C
M66.31	08	I72Z I75A I75B I75C
M66.32	08	I72Z I75A I75B

ICD	MDC	DRG
		I75C
M66.33	08	I72Z I75A I75B I75C
M66.34	08	I02A I02B I02C I32A I32B I32C I32D I32E I32F I72Z I75A I75B I75C
M66.35	08	I72Z I75A I75B I75C
M66.36	08	I72Z I75A I75B I75C
M66.37	08	I72Z I75A I75B I75C
M66.38	08	I72Z I75A I75B I75C
M66.39	08	I72Z I75A I75B I75C
M66.40	08	I72Z I75A I75B I75C
M66.41	08	I72Z I75A I75B I75C
M66.42	08	I72Z I75A I75B I75C
M66.43	08	I72Z I75A I75B I75C
M66.44	08	I72Z I75A I75B I75C
M66.45	08	I72Z I75A I75B I75C
M66.46	08	I72Z I75A I75B I75C
M66.47	08	I72Z I75A I75B I75C
M66.48	08	I72Z I75A I75B I75C
M66.49	08	I72Z I75A I75B I75C
M66.50	08	I72Z I75A I75B I75C
M66.51	08	I72Z I75A I75B I75C
M66.52	08	I72Z I75A I75B I75C
M66.53	08	I72Z I75A I75B I75C
M66.54	08	I72Z I75A I75B I75C
M66.55	08	I72Z I75A I75B I75C
M66.56	08	I72Z I75A I75B I75C
M66.57	08	I72Z I75A I75B I75C
M66.58	08	I72Z I75A I75B I75C
M66.59	08	I72Z I75A I75B I75C
M67.0	08	I72Z I75A I75B I75C
M67.10	08	I72Z I75A I75B I75C
M67.11	08	I72Z I75A I75B I75C
M67.12	08	I72Z I75A I75B I75C
M67.13	08	I72Z I75A I75B I75C
M67.14	08	I72Z I75A I75B I75C
M67.15	08	I72Z I75A I75B I75C
M67.16	08	I72Z I75A I75B I75C
M67.17	08	I72Z I75A I75B I75C
M67.18	08	I72Z I75A I75B I75C
M67.19	08	I72Z I75A I75B I75C
M67.20	08	I72Z I75A I75B I75C
M67.21	08	I72Z I75A I75B I75C
M67.22	08	I72Z I75A I75B I75C
M67.23	08	I72Z I75A I75B I75C
M67.24	08	I72Z I75A I75B I75C
M67.25	08	I72Z I75A I75B I75C
M67.26	08	I72Z I75A I75B I75C
M67.27	08	I72Z I75A I75B I75C
M67.28	08	I72Z I75A I75B I75C
M67.29	08	I72Z I75A I75B I75C
M67.30	08	I72Z I75A I75B I75C
M67.31	08	I72Z I75A I75B I75C
M67.32	08	I72Z I75A I75B I75C
M67.33	08	I72Z I75A I75B I75C
M67.34	08	I72Z I75A I75B I75C
M67.35	08	I72Z I75A I75B I75C
M67.36	08	I72Z I75A I75B I75C
M67.37	08	I72Z I75A I75B I75C
M67.38	08	I72Z I75A I75B I75C
M67.39	08	I72Z I75A I75B I75C
M67.40	08	I72Z I75A I75B I75C
M67.41	08	I72Z I75A I75B I75C
M67.42	08	I72Z I75A I75B I75C
M67.43	08	I72Z I75A I75B I75C
M67.44	08	I72Z I75A I75B I75C
M67.45	08	I72Z I75A I75B I75C
M67.46	08	I72Z I75A I75B I75C
M67.47	08	I72Z I75A I75B I75C
M67.48	08	I72Z I75A I75B I75C
M67.49	08	I72Z I75A I75B I75C
M67.80	08	I72Z I75A I75B I75C
M67.81	08	I72Z I75A I75B I75C
M67.82	08	I72Z I75A I75B I75C
M67.83	08	I72Z I75A I75B I75C
M67.84	08	I72Z I75A I75B I75C
M67.85	08	I72Z I75A I75B I75C
M67.86	08	I72Z I75A I75B I75C
M67.87	08	I72Z I75A I75B I75C
M67.88	08	I72Z I75A I75B I75C
M67.89	08	I72Z I75A I75B I75C
M67.90	08	I72Z I75A I75B I75C
M67.91	08	I72Z I75A I75B I75C
M67.92	08	I72Z I75A I75B I75C
M67.93	08	I72Z I75A I75B I75C
M67.94	08	I72Z I75A I75B I75C
M67.95	08	I72Z I75A I75B I75C
M67.96	08	I72Z I75A I75B I75C
M67.97	08	I72Z I75A I75B I75C
M67.98	08	I72Z I75A I75B I75C
M67.99	08	I72Z I75A I75B I75C
M68.00	Prä	961Z
M68.01	Prä	961Z
M68.02	Prä	961Z
M68.03	Prä	961Z
M68.04	Prä	961Z
M68.05	Prä	961Z
M68.06	Prä	961Z
M68.07	Prä	961Z
M68.08	Prä	961Z
M68.09	Prä	961Z
M68.80	Prä	961Z
M68.81	Prä	961Z
M68.82	Prä	961Z
M68.83	Prä	961Z
M68.84	Prä	961Z
M68.85	Prä	961Z
M68.86	Prä	961Z
M68.87	Prä	961Z
M68.88	Prä	961Z
M68.89	Prä	961Z
M70.0	08	I72Z I75A I75B I75C
M70.1	08	I72Z I75A I75B I75C
M70.2	08	I72Z I75A I75B I75C
M70.3	08	I72Z I75A I75B I75C
M70.4	08	I72Z I75A I75B I75C

DIAG

ICD	MDC	DRG
M70.5	08	I72Z I75A I75B I75C
M70.6	08	I72Z I75A I75B I75C
M70.7	08	I72Z I75A I75B I75C
M70.8	08	I72Z I75A I75B I75C
M70.9	08	I72Z I75A I75B I75C
M71.00	08	I72Z I75A I75B I75C
M71.01	08	I72Z I75A I75B I75C
M71.02	08	I72Z I75A I75B I75C
M71.2	08	I72Z I75A I75B I75C
M71.03	08	I72Z I75A I75B I75C
M71.04	08	I72Z I75A I75B I75C
M71.05	08	I72Z I75A I75B I75C
M71.06	08	I72Z I75A I75B I75C
M71.07	08	I72Z I75A I75B I75C
M71.08	08	I72Z I75A I75B I75C
M71.09	08	I72Z I75A I75B I75C
M71.10	08	I72Z I75A I75B I75C
M71.11	08	I72Z I75A I75B I75C
M71.12	08	I72Z I75A I75B I75C
M71.13	08	I72Z I75A I75B I75C
M71.14	08	I72Z I75A I75B I75C
M71.15	08	I72Z I75A I75B I75C
M71.16	08	I72Z I75A I75B I75C
M71.17	08	I72Z I75A I75B I75C
M71.18	08	I72Z I75A I75B I75C
M71.19	08	I72Z I75A I75B I75C
M71.30	08	I72Z I75A I75B I75C
M71.31	08	I72Z I75A I75B I75C
M71.32	08	I72Z I75A I75B I75C
M71.33	08	I72Z I75A I75B I75C
M71.34	08	I72Z I75A I75B I75C
M71.35	08	I72Z I75A I75B I75C
M71.36	08	I72Z I75A I75B I75C
M71.37	08	I72Z I75A I75B I75C
M71.38	08	I72Z I75A I75B I75C
M71.39	08	I72Z I75A I75B I75C
M71.40	08	I72Z I75A I75B I75C
M71.42	08	I72Z I75A I75B I75C
M71.43	08	I72Z I75A I75B I75C
M71.44	08	I72Z I75A I75B I75C
M71.45	08	I72Z I75A I75B I75C
M71.46	08	I72Z I75A I75B I75C
M71.47	08	I72Z I75A I75B I75C
M71.48	08	I72Z I75A I75B I75C
M71.49	08	I72Z I75A I75B I75C
M71.50	08	I72Z I75A I75B I75C
M71.52	08	I72Z I75A I75B I75C
M71.53	08	I72Z I75A I75B I75C
M71.54	08	I72Z I75A I75B I75C
M71.55	08	I72Z I75A I75B I75C
M71.56	08	I72Z I75A I75B I75C
M71.57	08	I72Z I75A I75B I75C
M71.58	08	I72Z I75A I75B I75C
M71.59	08	I72Z I75A I75B I75C
M71.80	08	I72Z I75A I75B I75C
M71.81	08	I72Z I75A I75B I75C
M71.82	08	I72Z I75A I75B I75C
M71.83	08	I72Z I75A I75B I75C
M71.84	08	I72Z I75A I75B I75C
M71.85	08	I72Z I75A I75B I75C
M71.86	08	I72Z I75A I75B I75C
M71.87	08	I72Z I75A I75B I75C
M71.88	08	I72Z I75A I75B I75C
M71.89	08	I72Z I75A I75B I75C
M71.90	08	I72Z I75A I75B I75C
M71.91	08	I72Z I75A I75B I75C
M71.92	08	I72Z I75A I75B I75C
M71.93	08	I72Z I75A I75B I75C
M71.94	08	I72Z I75A I75B I75C
M71.95	08	I72Z I75A I75B I75C
M71.96	08	I72Z I75A I75B I75C
M71.97	08	I72Z I75A I75B I75C
M71.98	08	I72Z I75A I75B I75C
M71.99	08	I72Z I75A I75B I75C
M72.0	08	I02A I02B I02C I32A I32B I32C I32D I32E I32F I72Z I75A I75B I75C
M72.1	08	I72Z I75A I75B I75C
M72.2	08	I72Z I75A I75B I75C
M72.40	08	I72Z I75A I75B I75C
M72.41	08	I72Z I75A I75B I75C
M72.42	08	I72Z I75A I75B I75C
M72.43	08	I72Z I75A I75B I75C
M72.44	08	I72Z I75A I75B I75C
M72.45	08	I72Z I75A I75B I75C
M72.46	08	I72Z I75A I75B I75C
M72.47	08	I72Z I75A I75B I75C
M72.48	08	I72Z I75A I75B I75C
M72.49	08	I72Z I75A I75B I75C
M72.60	Prä	A11C
	08	I72Z I75A I75B I75C
M72.61	Prä	A11C
	08	I72Z I75A I75B I75C
M72.62	Prä	A11C
	08	I72Z I75A I75B I75C
M72.63	Prä	A11C
	08	I72Z I75A I75B I75C
M72.64	Prä	A11C
	08	I72Z I75A I75B I75C
M72.65	Prä	A11C
	08	I72Z I75A I75B I75C
M72.66	Prä	A11C
	08	I72Z I75A I75B I75C
M72.67	Prä	A11C
	08	I72Z I75A I75B I75C
M72.68	Prä	A11C
	08	I72Z I75A I75B I75C
M72.69	Prä	A11C
	08	I72Z I75A I75B I75C
M72.80	08	I72Z I75A I75B I75C
M72.81	08	I72Z I75A I75B

ICD	MDC	DRG
		I75C
M72.82	08	I72Z I75A I75B
		I75C
M72.83	08	I72Z I75A I75B
		I75C
M72.84	08	I72Z I75A I75B
		I75C
M72.85	08	I72Z I75A I75B
		I75C
M72.86	08	I72Z I75A I75B
		I75C
M72.87	08	I72Z I75A I75B
		I75C
M72.88	08	I72Z I75A I75B
		I75C
M72.89	08	I72Z I75A I75B
		I75C
M72.90	08	I72Z I75A I75B
		I75C
M72.91	08	I72Z I75A I75B
		I75C
M72.92	08	I72Z I75A I75B
		I75C
M72.93	08	I72Z I75A I75B
		I75C
M72.94	08	I72Z I75A I75B
		I75C
M72.95	08	I72Z I75A I75B
		I75C
M72.96	08	I72Z I75A I75B
		I75C
M72.97	08	I72Z I75A I75B
		I75C
M72.98	08	I72Z I75A I75B
		I75C
M72.99	08	I72Z I75A I75B
		I75C
M73.00	15	MSPNG SPNG
	Prä	961Z
M73.01	15	MSPNG SPNG
	Prä	961Z
M73.02	15	MSPNG SPNG
	Prä	961Z
M73.03	15	MSPNG SPNG
	Prä	961Z
M73.04	15	MSPNG SPNG
	Prä	961Z
M73.05	15	MSPNG SPNG
	Prä	961Z
M73.06	15	MSPNG SPNG
	Prä	961Z
M73.07	15	MSPNG SPNG
	Prä	961Z
M73.08	15	MSPNG SPNG
	Prä	961Z
M73.09	15	MSPNG SPNG
	Prä	961Z
M73.10	Prä	961Z
M73.11	Prä	961Z
M73.12	Prä	961Z
M73.13	Prä	961Z
M73.14	Prä	961Z
M73.15	Prä	961Z
M73.16	Prä	961Z
M73.17	Prä	961Z
M73.18	Prä	961Z
M73.19	Prä	961Z
M73.80	Prä	961Z
M73.81	Prä	961Z
M73.82	Prä	961Z

ICD	MDC	DRG
M73.83	Prä	961Z
M73.84	Prä	961Z
M73.85	Prä	961Z
M73.86	Prä	961Z
M73.87	Prä	961Z
M73.88	Prä	961Z
M73.89	Prä	961Z
M75.0	08	I72Z I75A I75B
		I75C
M75.1	08	I72Z I75A I75B
		I75C
M75.2	08	I72Z I75A I75B
		I75C
M75.3	08	I72Z I75A I75B
		I75C
M75.4	08	I72Z I75A I75B
		I75C
M75.5	08	I72Z I75A I75B
		I75C
M75.6	08	I72Z I75A I75B
		I75C
M75.8	08	I72Z I75A I75B
		I75C
M75.9	08	I72Z I75A I75B
		I75C
M76.0	08	I72Z I75A I75B
		I75C
M76.1	08	I72Z I75A I75B
		I75C
M76.2	08	I72Z I75A I75B
		I75C
M76.3	08	I72Z I75A I75B
		I75C
M76.4	08	I72Z I75A I75B
		I75C
M76.5	08	I72Z I75A I75B
		I75C
M76.6	08	I72Z I75A I75B
		I75C
M76.7	08	I72Z I75A I75B
		I75C
M76.8	08	I72Z I75A I75B
		I75C
M76.9	08	I72Z I75A I75B
		I75C
M77.0	08	I72Z I75A I75B
		I75C
M77.1	08	I72Z I75A I75B
		I75C
M77.2	08	I72Z I75A I75B
		I75C
M77.3	08	I76A I76B
M77.4	08	I72Z I75A I75B
		I75C
M77.5	08	I72Z I75A I75B
		I75C
M77.8	08	I72Z I75A I75B
		I75C
M77.9	08	I72Z I75A I75B
		I75C
M79.00	08	I79Z
M79.01	08	I79Z
M79.02	08	I79Z
M79.03	08	I79Z
M79.04	08	I79Z
M79.05	08	I79Z
M79.06	08	I79Z
M79.07	08	I79Z
M79.08	08	I79Z
M79.09	08	I02A I02B I02C

ICD	MDC	DRG
		I08A I08B I13A
		I13B I79Z
M79.10	08	I71A I71B
M79.11	08	I71A I71B
M79.12	08	I71A I71B
M79.13	08	I71A I71B
M79.14	08	I71A I71B
M79.15	08	I71A I71B
M79.16	08	I71A I71B
M79.17	08	I71A I71B
M79.18	08	I71A I71B
M79.19	08	I71A I71B
M79.20	01	B03A B03B B03C
		B71A B71B B71C
M79.21	01	B03A B03B B03C
		B71A B71B B71C
M79.22	01	B03A B03B B03C
		B71A B71B B71C
M79.23	01	B03A B03B B03C
		B71A B71B B71C
M79.24	01	B03A B03B B03C
		B71A B71B B71C
M79.25	01	B03A B03B B03C
		B71A B71B B71C
M79.26	01	B03A B03B B03C
		B71A B71B B71C
M79.27	01	B03A B03B B03C
		B71A B71B B71C
M79.28	01	B03A B03B B03C
		B71A B71B B71C
		B81A B81B B81C
M79.29	01	B71A B71B B71C
		B81A B81B B81C
M79.30	09	J61A J61B J61C
		J61D
M79.31	09	J61A J61B J61C
		J61D
M79.32	09	J61A J61B J61C
		J61D
M79.33	09	J61A J61B J61C
		J61D
M79.34	09	J61A J61B J61C
		J61D
M79.35	09	J61A J61B J61C
		J61D
M79.36	09	J61A J61B J61C
		J61D
M79.37	09	J61A J61B J61C
		J61D
M79.38	09	J61A J61B J61C
		J61D
M79.39	09	J61A J61B J61C
		J61D
M79.46	08	I76A I76B
M79.50	08	I76A I76B
M79.51	08	I76A I76B
M79.52	08	I76A I76B
M79.53	08	I76A I76B
M79.54	08	I76A I76B
M79.55	08	I76A I76B
M79.56	08	I76A I76B
M79.57	08	I76A I76B
M79.58	08	I76A I76B
M79.59	08	I76A I76B
M79.60	08	I71A I71B
M79.61	08	I71A I71B
M79.62	08	I71A I71B
M79.63	08	I71A I71B
M79.64	08	I71A I71B
M79.65	08	I71A I71B

DIAG

ICD	MDC	DRG
M79.66	08	I71A I71B
M79.67	08	I71A I71B
M79.69	08	I71A I71B
M79.70	08	I79Z
M79.80	08	I71A I71B
M79.81	08	I71A I71B
M79.82	08	I71A I71B
M79.83	08	I71A I71B
M79.84	08	I71A I71B
M79.85	08	I71A I71B
M79.86	08	I71A I71B
M79.87	08	I71A I71B
M79.88	08	I71A I71B
M79.89	08	I71A I71B
M79.90	08	I71A I71B
M79.91	08	I71A I71B
M79.92	08	I71A I71B
M79.93	08	I71A I71B
M79.94	08	I71A I71B
M79.95	08	I71A I71B
M79.96	08	I71A I71B
M79.97	08	I71A I71B
M79.98	08	I71A I71B
M79.99	08	I71A I71B
M80.00	08	I69A I69B I69C
M80.01	08	I69A I69B I69C
M80.02	08	I69A I69B I69C
M80.03	08	I69A I69B I69C
M80.04	08	I69A I69B I69C
M80.05	08	I69A I69B I69C
M80.06	08	I69A I69B I69C
M80.07	08	I69A I69B I69C
M80.08	08	I69A I69B I69C
M80.09	08	I69A I69B I69C
M80.10	08	I69A I69B I69C
M80.11	08	I69A I69B I69C
M80.12	08	I69A I69B I69C
M80.13	08	I69A I69B I69C
M80.14	08	I69A I69B I69C
M80.15	08	I69A I69B I69C
M80.16	08	I69A I69B I69C
M80.17	08	I69A I69B I69C
M80.18	08	I69A I69B I69C
M80.19	08	I69A I69B I69C
M80.20	08	I69A I69B I69C
M80.21	08	I69A I69B I69C
M80.22	08	I69A I69B I69C
M80.23	08	I69A I69B I69C
M80.24	08	I69A I69B I69C
M80.25	08	I69A I69B I69C
M80.26	08	I69A I69B I69C
M80.27	08	I69A I69B I69C
M80.28	08	I69A I69B I69C
M80.29	08	I69A I69B I69C
M80.30	08	I69A I69B I69C
M80.31	08	I69A I69B I69C
M80.32	08	I69A I69B I69C
M80.33	08	I69A I69B I69C
M80.34	08	I69A I69B I69C
M80.35	08	I69A I69B I69C
M80.36	08	I69A I69B I69C
M80.37	08	I69A I69B I69C
M80.38	08	I69A I69B I69C
M80.39	08	I69A I69B I69C
M80.40	08	I69A I69B I69C
M80.41	08	I69A I69B I69C
M80.42	08	I69A I69B I69C
M80.43	08	I69A I69B I69C
M80.44	08	I69A I69B I69C
M80.45	08	I69A I69B I69C
M80.46	08	I69A I69B I69C
M80.47	08	I69A I69B I69C
M80.48	08	I69A I69B I69C
M80.49	08	I69A I69B I69C
M80.50	08	I69A I69B I69C
M80.51	08	I69A I69B I69C
M80.52	08	I69A I69B I69C
M80.53	08	I69A I69B I69C
M80.54	08	I69A I69B I69C
M80.55	08	I69A I69B I69C
M80.56	08	I69A I69B I69C
M80.57	08	I69A I69B I69C
M80.58	08	I69A I69B I69C
M80.59	08	I69A I69B I69C
M80.80	08	I69A I69B I69C
M80.81	08	I69A I69B I69C
M80.82	08	I69A I69B I69C
M80.83	08	I69A I69B I69C
M80.84	08	I69A I69B I69C
M80.85	08	I69A I69B I69C
M80.86	08	I69A I69B I69C
M80.87	08	I69A I69B I69C
M80.88	08	I69A I69B I69C
M80.89	08	I69A I69B I69C
M80.90	08	I69A I69B I69C
M80.91	08	I69A I69B I69C
M80.92	08	I69A I69B I69C
M80.93	08	I69A I69B I69C
M80.94	08	I69A I69B I69C
M80.95	08	I69A I69B I69C
M80.96	08	I69A I69B I69C
M80.97	08	I69A I69B I69C
M80.98	08	I69A I69B I69C
M80.99	08	I69A I69B I69C
M81.00	08	I69A I69B I69C
M81.01	08	I69A I69B I69C
M81.02	08	I69A I69B I69C
M81.03	08	I69A I69B I69C
M81.04	08	I69A I69B I69C
M81.05	08	I69A I69B I69C
M81.06	08	I69A I69B I69C
M81.07	08	I69A I69B I69C
M81.08	08	I69A I69B I69C
M81.09	08	I69A I69B I69C
M81.10	08	I69A I69B I69C
M81.11	08	I69A I69B I69C
M81.12	08	I69A I69B I69C
M81.13	08	I69A I69B I69C
M81.14	08	I69A I69B I69C
M81.15	08	I69A I69B I69C
M81.16	08	I69A I69B I69C
M81.17	08	I69A I69B I69C
M81.18	08	I69A I69B I69C
M81.19	08	I69A I69B I69C
M81.20	08	I69A I69B I69C
M81.21	08	I69A I69B I69C
M81.22	08	I69A I69B I69C
M81.23	08	I69A I69B I69C
M81.24	08	I69A I69B I69C
M81.25	08	I69A I69B I69C
M81.26	08	I69A I69B I69C
M81.27	08	I69A I69B I69C
M81.28	08	I69A I69B I69C
M81.29	08	I69A I69B I69C
M81.30	08	I69A I69B I69C
M81.31	08	I69A I69B I69C
M81.32	08	I69A I69B I69C
M81.33	08	I69A I69B I69C
M81.34	08	I69A I69B I69C
M81.35	08	I69A I69B I69C
M81.36	08	I69A I69B I69C
M81.37	08	I69A I69B I69C
M81.38	08	I69A I69B I69C
M81.39	08	I69A I69B I69C
M81.40	08	I69A I69B I69C
M81.41	08	I69A I69B I69C
M81.42	08	I69A I69B I69C
M81.43	08	I69A I69B I69C
M81.44	08	I69A I69B I69C
M81.45	08	I69A I69B I69C
M81.46	08	I69A I69B I69C
M81.47	08	I69A I69B I69C
M81.48	08	I69A I69B I69C
M81.49	08	I69A I69B I69C
M81.50	08	I69A I69B I69C
M81.51	08	I69A I69B I69C
M81.52	08	I69A I69B I69C
M81.53	08	I69A I69B I69C
M81.54	08	I69A I69B I69C
M81.55	08	I69A I69B I69C
M81.56	08	I69A I69B I69C
M81.57	08	I69A I69B I69C
M81.58	08	I69A I69B I69C
M81.59	08	I69A I69B I69C
M81.60	08	I69A I69B I69C
M81.65	08	I69A I69B I69C
M81.66	08	I69A I69B I69C
M81.67	08	I69A I69B I69C
M81.69	08	I69A I69B I69C
M81.80	08	I69A I69B I69C
M81.81	08	I69A I69B I69C
M81.82	08	I69A I69B I69C
M81.83	08	I69A I69B I69C
M81.84	08	I69A I69B I69C
M81.85	08	I69A I69B I69C
M81.86	08	I69A I69B I69C
M81.87	08	I69A I69B I69C
M81.88	08	I69A I69B I69C
M81.89	08	I69A I69B I69C
M81.90	08	I69A I69B I69C
M81.91	08	I69A I69B I69C
M81.92	08	I69A I69B I69C
M81.93	08	I69A I69B I69C
M81.94	08	I69A I69B I69C
M81.95	08	I69A I69B I69C
M81.96	08	I69A I69B I69C
M81.97	08	I69A I69B I69C
M81.98	08	I69A I69B I69C
M81.99	08	I69A I69B I69C
M82.00	Prä	961Z
M82.01	Prä	961Z
M82.02	Prä	961Z
M82.03	Prä	961Z
M82.04	Prä	961Z
M82.05	Prä	961Z
M82.06	Prä	961Z
M82.07	Prä	961Z
M82.08	Prä	961Z
M82.09	Prä	961Z
M82.10	Prä	961Z
M82.11	Prä	961Z
M82.12	Prä	961Z
M82.13	Prä	961Z
M82.14	Prä	961Z
M82.15	Prä	961Z
M82.16	Prä	961Z
M82.17	Prä	961Z
M82.18	Prä	961Z
M82.19	Prä	961Z
M82.80	Prä	961Z

ICD	MDC	DRG
M82.81	Prä	961Z
M82.82	Prä	961Z
M82.83	Prä	961Z
M82.84	Prä	961Z
M82.85	Prä	961Z
M82.86	Prä	961Z
M82.87	Prä	961Z
M82.88	Prä	961Z
M82.89	Prä	961Z
M83.00	08	I69A I69B I69C
M83.01	08	I69A I69B I69C
M83.02	08	I69A I69B I69C
M83.03	08	I69A I69B I69C
M83.04	08	I69A I69B I69C
M83.05	08	I69A I69B I69C
M83.06	08	I69A I69B I69C
M83.07	08	I69A I69B I69C
M83.08	08	I69A I69B I69C
M83.09	08	I69A I69B I69C
M83.10	08	I69A I69B I69C
M83.11	08	I69A I69B I69C
M83.12	08	I69A I69B I69C
M83.13	08	I69A I69B I69C
M83.14	08	I69A I69B I69C
M83.15	08	I69A I69B I69C
M83.16	08	I69A I69B I69C
M83.17	08	I69A I69B I69C
M83.18	08	I69A I69B I69C
M83.19	08	I69A I69B I69C
M83.20	08	I69A I69B I69C
M83.21	08	I69A I69B I69C
M83.22	08	I69A I69B I69C
M83.23	08	I69A I69B I69C
M83.24	08	I69A I69B I69C
M83.25	08	I69A I69B I69C
M83.26	08	I69A I69B I69C
M83.27	08	I69A I69B I69C
M83.28	08	I69A I69B I69C
M83.29	08	I69A I69B I69C
M83.30	08	I69A I69B I69C
M83.31	08	I69A I69B I69C
M83.32	08	I69A I69B I69C
M83.33	08	I69A I69B I69C
M83.34	08	I69A I69B I69C
M83.35	08	I69A I69B I69C
M83.36	08	I69A I69B I69C
M83.37	08	I69A I69B I69C
M83.38	08	I69A I69B I69C
M83.39	08	I69A I69B I69C
M83.40	08	I69A I69B I69C
M83.41	08	I69A I69B I69C
M83.42	08	I69A I69B I69C
M83.43	08	I69A I69B I69C
M83.44	08	I69A I69B I69C
M83.45	08	I69A I69B I69C
M83.46	08	I69A I69B I69C
M83.47	08	I69A I69B I69C
M83.48	08	I69A I69B I69C
M83.49	08	I69A I69B I69C
M83.50	08	I69A I69B I69C
M83.51	08	I69A I69B I69C
M83.52	08	I69A I69B I69C
M83.53	08	I69A I69B I69C
M83.54	08	I69A I69B I69C
M83.55	08	I69A I69B I69C
M83.56	08	I69A I69B I69C
M83.57	08	I69A I69B I69C
M83.58	08	I69A I69B I69C
M83.59	08	I69A I69B I69C
M83.80	08	I69A I69B I69C

ICD	MDC	DRG
M83.81	08	I69A I69B I69C
M83.82	08	I69A I69B I69C
M83.83	08	I69A I69B I69C
M83.84	08	I69A I69B I69C
M83.85	08	I69A I69B I69C
M83.86	08	I69A I69B I69C
M83.87	08	I69A I69B I69C
M83.88	08	I69A I69B I69C
M83.89	08	I69A I69B I69C
M83.90	08	I69A I69B I69C
M83.91	08	I69A I69B I69C
M83.92	08	I69A I69B I69C
M83.93	08	I69A I69B I69C
M83.94	08	I69A I69B I69C
M83.95	08	I69A I69B I69C
M83.96	08	I69A I69B I69C
M83.97	08	I69A I69B I69C
M83.98	08	I69A I69B I69C
M83.99	08	I69A I69B I69C
M84.00	08	I76A I76B
M84.01	08	I76A I76B
M84.02	08	I76A I76B
M84.03	08	I76A I76B
M84.04	08	I76A I76B
M84.05	08	I76A I76B
M84.06	08	I76A I76B
M84.07	08	I76A I76B
M84.08	08	I76A I76B
M84.09	08	I76A I76B
M84.10	08	I76A I76B
M84.11	08	I76A I76B
M84.12	08	I76A I76B
M84.13	08	I76A I76B
M84.14	08	I02A I02B I02C
		I32A I32B I32C
		I32E I32F I76A
		I76B
M84.15	08	I76A I76B
M84.16	08	I76A I76B
M84.17	08	I76A I76B
M84.18	08	I76A I76B
M84.19	08	I76A I76B
M84.20	08	I76A I76B
M84.21	08	I76A I76B
M84.22	08	I76A I76B
M84.23	08	I76A I76B
M84.24	08	I02A I02B I02C
		I32A I32B I32C
		I32D I32E I32F
		I76A I76B
M84.25	08	I76A I76B
M84.26	08	I76A I76B
M84.27	08	I76A I76B
M84.28	08	I76A I76B
M84.29	08	I76A I76B
M84.30	08	I65A I65B
	15	MSPNG SPNG
M84.31	08	I65A I65B
	15	MSPNG SPNG
M84.32	08	I65A I65B
	15	MSPNG SPNG
M84.33	08	I65A I65B
	15	MSPNG SPNG
M84.34	08	I02A I02B I02C
		I32A I32B I32C
		I32D I32E I32F
		I65A I65B
	15	MSPNG SPNG
M84.35	08	I65A I65B
	15	MSPNG SPNG

ICD	MDC	DRG
M84.36	08	I65A I65B
	15	MSPNG SPNG
M84.37	08	I65A I65B
	15	MSPNG SPNG
M84.38	08	I65A I65B
	15	MSPNG SPNG
M84.39	08	I65A I65B
	15	MSPNG SPNG
M84.40	08	I65A I65B
	15	MSPNG SPNG
	Prä	A11C
M84.41	08	I65A I65B
	15	MSPNG SPNG
	Prä	A11C
M84.42	08	I65A I65B
	15	MSPNG SPNG
	Prä	A11C
M84.43	08	I65A I65B
	15	MSPNG SPNG
	Prä	A11C
M84.44	08	I02A I02B I02C
		I32A I32B I32C
		I32D I32E I32F
		I65A I65B
	15	MSPNG SPNG
	Prä	A11C
M84.45	08	I65A I65B
	15	MSPNG SPNG
	Prä	A11C
M84.46	08	I65A I65B
	15	MSPNG SPNG
	Prä	A11C
M84.47	08	I65A I65B
	15	MSPNG SPNG
	Prä	A11C
M84.48	08	I65A I65B
	15	MSPNG SPNG
	Prä	A11C
M84.49	08	I65A I65B
	15	MSPNG SPNG
	Prä	A11C
M84.80	08	I76A I76B
M84.81	08	I76A I76B
M84.82	08	I76A I76B
M84.83	08	I76A I76B
M84.84	08	I76A I76B
M84.85	08	I76A I76B
M84.86	08	I76A I76B
M84.87	08	I76A I76B
M84.88	08	I76A I76B
M84.89	08	I76A I76B
M84.90	08	I76A I76B
M84.91	08	I76A I76B
M84.92	08	I76A I76B
M84.93	08	I76A I76B
M84.94	08	I76A I76B
M84.95	08	I76A I76B
M84.96	08	I76A I76B
M84.97	08	I76A I76B
M84.98	08	I76A I76B
M84.99	08	I76A I76B
M85.00	08	I69A I69B I69C
M85.01	08	I69A I69B I69C
M85.02	08	I69A I69B I69C
M85.2	08	I76A I76B
M85.03	08	I69A I69B I69C
M85.04	08	I69A I69B I69C
M85.05	08	I69A I69B I69C
M85.06	08	I69A I69B I69C
M85.07	08	I69A I69B I69C

DIAG

ICD	MDC	DRG
M85.08	08	I69A I69B I69C
M85.09	08	I69A I69B I69C
M85.10	08	I76A I76B
M85.11	08	I76A I76B
M85.12	08	I76A I76B
M85.13	08	I76A I76B
M85.14	08	I76A I76B
M85.15	08	I76A I76B
M85.16	08	I76A I76B
M85.17	08	I76A I76B
M85.18	08	I76A I76B
M85.19	08	I76A I76B
M85.30	08	I69A I69B I69C
M85.31	08	I69A I69B I69C
M85.32	08	I69A I69B I69C
M85.33	08	I69A I69B I69C
M85.34	08	I69A I69B I69C
M85.35	08	I69A I69B I69C
M85.36	08	I69A I69B I69C
M85.37	08	I69A I69B I69C
M85.38	08	I69A I69B I69C
M85.39	08	I69A I69B I69C
M85.40	08	I69A I69B I69C
M85.41	08	I69A I69B I69C
M85.42	08	I69A I69B I69C
M85.43	08	I69A I69B I69C
M85.44	08	I69A I69B I69C
M85.45	08	I69A I69B I69C
M85.46	08	I69A I69B I69C
M85.47	08	I69A I69B I69C
M85.48	08	I69A I69B I69C
M85.49	08	I69A I69B I69C
M85.50	08	I69A I69B I69C
M85.51	08	I69A I69B I69C
M85.52	08	I69A I69B I69C
M85.53	08	I69A I69B I69C
M85.54	08	I69A I69B I69C
M85.55	08	I69A I69B I69C
M85.56	08	I69A I69B I69C
M85.57	08	I69A I69B I69C
M85.58	08	I69A I69B I69C
M85.59	08	I69A I69B I69C
M85.60	08	I69A I69B I69C
M85.61	08	I69A I69B I69C
M85.62	08	I69A I69B I69C
M85.63	08	I69A I69B I69C
M85.64	08	I69A I69B I69C
M85.65	08	I69A I69B I69C
M85.66	08	I69A I69B I69C
M85.67	08	I69A I69B I69C
M85.68	08	I69A I69B I69C
M85.69	08	I69A I69B I69C
M85.80	08	I76A I76B
M85.81	08	I76A I76B
M85.82	08	I76A I76B
M85.83	08	I76A I76B
M85.84	08	I76A I76B
M85.85	08	I76A I76B
M85.86	08	I76A I76B
M85.87	08	I76A I76B
M85.88	08	I76A I76B
M85.89	08	I76A I76B
M85.90	08	I76A I76B
M85.91	08	I76A I76B
M85.92	08	I76A I76B
M85.93	08	I76A I76B
M85.94	08	I76A I76B
M85.95	08	I76A I76B
M85.96	08	I76A I76B
M85.97	08	I76A I76B
M85.98	08	I76A I76B
M85.99	08	I76A I76B
M86.00	05	F61A
	08	I02A I02B I02C
		I08A I08B I12A
		I12B I12C I13A
		I13B I20C I64A
		I64B
	15	MSPNG SPNG
	Prä	B61B B61C B61D
M86.01	05	F61A
	08	I02A I02B I02C
		I08A I08B I12A
		I12B I12C I13A
		I13B I64A I64B
	15	MSPNG SPNG
	Prä	B61B B61C B61D
M86.02	05	F61A
	08	I02A I02B I02C
		I08A I08B I12A
		I12B I12C I13A
		I13B I64A I64B
	15	MSPNG SPNG
	Prä	B61B B61C B61D
M86.03	05	F61A
	08	I02A I02B I02C
		I08A I08B I12A
		I12B I12C I13A
		I13B I64A I64B
	15	MSPNG SPNG
	Prä	B61B B61C B61D
M86.04	05	F61A
	08	I02A I02B I02C
		I08A I08B I13A
		I13B I32A I32B
		I32C I32D I32E
		I32F I64A I64B
	15	MSPNG SPNG
M86.05	05	F61A
	08	I02A I02B I02C
		I03A I03B I04A
		I04B I04C I08A
		I08B I12A I12B
		I12C I13A I13B
		I64A I64B
	15	MSPNG SPNG
	Prä	A95A A95B B61B
		B61C B61D
M86.06	05	F61A
	08	I02A I02B I02C
		I04A I04B I04C
		I08A I08B I12A
		I12B I12C I13A
		I13B I64A I64B
	15	MSPNG SPNG
	Prä	A95A A95B B61B
		B61C B61D
M86.07	05	F61A
	08	I02A I02B I02C
		I08A I08B I13A
		I13B I64A I64B
	15	MSPNG SPNG
M86.08	05	F61A
	08	I02A I02B I02C
		I08A I08B I13A
		I13B I64A I64B
	15	MSPNG SPNG
M86.09	05	F61A
	08	I02A I02B I02C
		I08A I08B I13A
		I13B I64A I64B
	15	MSPNG SPNG
M86.10	05	F61A
	08	I02A I02B I02C
		I08A I08B I12A
		I12B I12C I13A
		I13B I14A I64A
		I64B
	15	MSPNG SPNG
	Prä	B61B B61C B61D
M86.11	05	F61A
	08	I02A I02B I02C
		I08A I08B I12A
		I12B I12C I13A
		I13B I14A I64A
		I64B
	15	MSPNG SPNG
	Prä	B61B B61C B61D
M86.12	05	F61A
	08	I02A I02B I02C
		I08A I08B I12A
		I12B I12C I13A
		I13B I14A I64A
		I64B
	15	MSPNG SPNG
	Prä	B61B B61C B61D
M86.13	05	F61A
	08	I02A I02B I02C
		I08A I08B I12A
		I12B I12C I13A
		I13B I14A I64A
		I64B
	15	MSPNG SPNG
	Prä	B61B B61C B61D
M86.14	05	F61A
	08	I02A I02B I02C
		I08A I08B I13A
		I13B I14A I32A
		I32B I32C I32E
		I32F I64A I64B
	15	MSPNG SPNG
M86.15	05	F61A
	08	I02A I02B I02C
		I03A I03B I04A
		I04B I04C I08A
		I08B I12A I12B
		I12C I13A I13B
		I14A I64A I64B
	15	MSPNG SPNG
	Prä	A95A A95B B61B
		B61C B61D
M86.16	05	F61A
	08	I02A I02B I02C
		I04A I04B I04C
		I08A I08B I12A
		I12B I12C I13A
		I13B I14A I64A
		I64B
	15	MSPNG SPNG
	Prä	A95A A95B B61B
		B61C B61D
M86.17	05	F61A
	08	I02A I02B I02C
		I08A I08B I13A
		I13B I14A I20C
		I64A I64B
	15	MSPNG SPNG
M86.18	08	I02A I02B I02C
		I08A I08B I13A
		I13B I64A I64B

ICD	MDC	DRG
	15	MSPNG SPNG
M86.19	08	I02A I02B I02C
		I08A I08B I13A
		I13B I64A I64B
	15	MSPNG SPNG
M86.20	05	F61A
	08	I02A I02B I02C
		I08A I08B I12A
		I12B I12C I13A
		I13B I64A I64B
	15	MSPNG SPNG
	Prä	B61B B61C B61D
M86.21	05	F61A
	08	I02A I02B I02C
		I08A I08B I12A
		I12B I12C I13A
		I13B I64A I64B
	15	MSPNG SPNG
	Prä	B61B B61C B61D
M86.22	05	F61A
	08	I02A I02B I02C
		I08A I08B I12A
		I12B I12C I13A
		I13B I64A I64B
	15	MSPNG SPNG
	Prä	B61B B61C B61D
M86.23	05	F61A
	08	I02A I02B I02C
		I08A I08B I12A
		I12B I12C I13A
		I13B I64A I64B
	15	MSPNG SPNG
	Prä	B61B B61C B61D
M86.24	05	F61A
	08	I02A I02B I02C
		I08A I08B I13A
		I13B I32A I32B
		I32C I32E I32F
		I64A I64B
	15	MSPNG SPNG
M86.25	05	F61A
	08	I02A I02B I02C
		I03A I03B I04A
		I04B I04C I08A
		I08B I12A I12B
		I12C I13A I13B
		I64A I64B
	15	MSPNG SPNG
	Prä	A95A A95B B61B
		B61C B61D
M86.26	05	F61A
	08	I02A I02B I02C
		I04A I04B I04C
		I08A I08B I12A
		I12B I12C I13A
		I13B I64A I64B
	15	MSPNG SPNG
	Prä	A95A A95B B61B
		B61C B61D
M86.27	05	F61A
	08	I02A I02B I02C
		I08A I08B I13A
		I13B I20C I64A
		I64B
	15	MSPNG SPNG
M86.28	08	I02A I02B I02C
		I08A I08B I13A
		I13B I64A I64B
	15	MSPNG SPNG
M86.29	08	I02A I02B I02C
		I08A I08B I13A
		I13B I64A I64B
	15	MSPNG SPNG
M86.30	05	F61A
	08	I02A I02B I02C
		I08A I08B I12A
		I12B I12C I13A
		I13B I64A I64B
	15	MSPNG SPNG
	Prä	B61B B61C B61D
M86.31	05	F61A
	08	I02A I02B I02C
		I08A I08B I12A
		I12B I12C I13A
		I13B I64A I64B
	15	MSPNG SPNG
	Prä	B61B B61C B61D
M86.32	05	F61A
	08	I02A I02B I02C
		I08A I08B I12A
		I12B I12C I13A
		I13B I64A I64B
	15	MSPNG SPNG
	Prä	B61B B61C B61D
M86.33	05	F61A
	08	I02A I02B I02C
		I08A I08B I12A
		I12B I12C I13A
		I13B I64A I64B
	15	MSPNG SPNG
	Prä	B61B B61C B61D
M86.34	05	F61A
	08	I02A I02B I02C
		I08A I08B I13A
		I13B I32A I32B
		I32C I32E I32F
		I64A I64B
	15	MSPNG SPNG
M86.35	05	F61A
	08	I02A I02B I02C
		I03A I03B I04A
		I04B I04C I08A
		I08B I12A I12B
		I12C I13A I13B
		I64A I64B
	15	MSPNG SPNG
	Prä	A95A A95B B61B
		B61C B61D
M86.36	05	F61A
	08	I02A I02B I02C
		I04A I04B I04C
		I08A I08B I12A
		I12B I12C I13A
		I13B I64A I64B
	15	MSPNG SPNG
	Prä	A95A A95B B61B
		B61C B61D
M86.37	05	F61A
	08	I02A I02B I02C
		I08A I08B I13A
		I13B I20C I64A
		I64B
	15	MSPNG SPNG
M86.38	08	I02A I02B I02C
		I08A I08B I13A
		I13B I64A I64B
	15	MSPNG SPNG
M86.39	08	I02A I02B I02C
		I08A I08B I13A
		I13B I64A I64B
	15	MSPNG SPNG
M86.40	05	F61A
	08	I02A I02B I02C
		I08A I08B I12A
		I12B I12C I13A
		I13B I64A I64B
	15	MSPNG SPNG
	Prä	B61B B61C B61D
M86.41	05	F61A
	08	I02A I02B I02C
		I08A I08B I12A
		I12B I12C I13A
		I13B I64A I64B
	15	MSPNG SPNG
	Prä	B61B B61C B61D
M86.42	05	F61A
	08	I02A I02B I02C
		I08A I08B I12A
		I12B I12C I13A
		I13B I64A I64B
	15	MSPNG SPNG
	Prä	B61B B61C B61D
M86.43	05	F61A
	08	I02A I02B I02C
		I08A I08B I12A
		I12B I12C I13A
		I13B I64A I64B
	15	MSPNG SPNG
	Prä	B61B B61C B61D
M86.44	05	F61A
	08	I02A I02B I02C
		I08A I08B I13A
		I13B I32A I32B
		I32C I32E I32F
		I64A I64B
	15	MSPNG SPNG
M86.45	05	F61A
	08	I02A I02B I02C
		I03A I03B I04A
		I04B I04C I08A
		I08B I12A I12B
		I12C I13A I13B
		I64A I64B
	15	MSPNG SPNG
	Prä	A95A A95B B61B
		B61C B61D
M86.46	05	F61A
	08	I02A I02B I02C
		I04A I04B I04C
		I08A I08B I12A
		I12B I12C I13A
		I13B I64A I64B
	15	MSPNG SPNG
	Prä	A95A A95B B61B
		B61C B61D
M86.47	05	F61A
	08	I02A I02B I02C
		I08A I08B I13A
		I13B I20C I64A
		I64B
	15	MSPNG SPNG
M86.48	08	I02A I02B I02C
		I08A I08B I13A
		I13B I64A I64B
	15	MSPNG SPNG
M86.49	08	I02A I02B I02C
		I08A I08B I13A
		I13B I64A I64B
	15	MSPNG SPNG
M86.50	05	F61A

DIAG

ICD	MDC	DRG
	08	I02A I02B I02C
		I08A I08B I12A
		I12B I12C I13A
		I13B I64A I64B
	15	MSPNG SPNG
	Prä	B61B B61C B61D
M86.51	05	F61A
	08	I02A I02B I02C
		I08A I08B I12A
		I12B I12C I13A
		I13B I64A I64B
	15	MSPNG SPNG
	Prä	B61B B61C B61D
M86.52	05	F61A
	08	I02A I02B I02C
		I08A I08B I12A
		I12B I12C I13A
		I13B I64A I64B
	15	MSPNG SPNG
	Prä	B61B B61C B61D
M86.53	05	F61A
	08	I02A I02B I02C
		I08A I08B I12A
		I12B I12C I13A
		I13B I64A I64B
	15	MSPNG SPNG
	Prä	B61B B61C B61D
M86.54	05	F61A
	08	I02A I02B I02C
		I08A I08B I13A
		I13B I32A I32B
		I32C I32E I32F
		I64A I64B
	15	MSPNG SPNG
M86.55	05	F61A
	08	I02A I02B I02C
		I03A I03B I04A
		I04B I04C I08A
		I08B I12A I12B
		I12C I13A I13B
		I64A I64B
	15	MSPNG SPNG
	Prä	A95A A95B B61B
		B61C B61D
M86.56	05	F61A
	08	I02A I02B I02C
		I04A I04B I04C
		I08A I08B I12A
		I12B I12C I13A
		I13B I64A I64B
	15	MSPNG SPNG
	Prä	A95A A95B B61B
		B61C B61D
M86.57	05	F61A
	08	I02A I02B I02C
		I08A I08B I13A
		I13B I20C I64A
		I64B
	15	MSPNG SPNG
M86.58	08	I02A I02B I02C
		I08A I08B I13A
		I13B I64A I64B
	15	MSPNG SPNG
M86.59	08	I02A I02B I02C
		I08A I08B I13A
		I13B I64A I64B
	15	MSPNG SPNG
M86.60	05	F61A
	08	I02A I02B I02C
		I08A I08B I12A
		I12B I12C I13A
		I13B I64A I64B
	15	MSPNG SPNG
	Prä	B61B B61C B61D
M86.61	05	F61A
	08	I02A I02B I02C
		I08A I08B I12A
		I12B I12C I13A
		I13B I64A I64B
	15	MSPNG SPNG
	Prä	B61B B61C B61D
M86.62	05	F61A
	08	I02A I02B I02C
		I08A I08B I12A
		I12B I12C I13A
		I13B I64A I64B
	15	MSPNG SPNG
	Prä	B61B B61C B61D
M86.63	05	F61A
	08	I02A I02B I02C
		I08A I08B I12A
		I12B I12C I13A
		I13B I64A I64B
	15	MSPNG SPNG
	Prä	B61B B61C B61D
M86.64	05	F61A
	08	I02A I02B I02C
		I08A I08B I13A
		I13B I32A I32B
		I32C I32E I32F
		I64A I64B
	15	MSPNG SPNG
M86.65	05	F61A
	08	I02A I02B I02C
		I03A I03B I04A
		I04B I04C I08A
		I08B I12A I12B
		I12C I13A I13B
		I64A I64B
	15	MSPNG SPNG
	Prä	A95A A95B B61B
		B61C B61D
M86.66	05	F61A
	08	I02A I02B I02C
		I04A I04B I04C
		I08A I08B I12A
		I12B I12C I13A
		I13B I64A I64B
	15	MSPNG SPNG
	Prä	A95A A95B B61B
		B61C B61D
M86.67	05	F61A
	08	I02A I02B I02C
		I08A I08B I13A
		I13B I20C I64A
		I64B
	15	MSPNG SPNG
M86.68	08	I02A I02B I02C
		I08A I08B I13A
		I13B I64A I64B
	15	MSPNG SPNG
M86.69	08	I02A I02B I02C
		I08A I08B I13A
		I13B I64A I64B
	15	MSPNG SPNG
M86.80	05	F61A
	08	I02A I02B I02C
		I08A I08B I12A
		I12B I12C I13A
		I13B I64A I64B
	15	MSPNG SPNG
	Prä	B61B B61C B61D
M86.81	05	F61A
	08	I02A I02B I02C
		I08A I08B I12A
		I12B I12C I13A
		I13B I64A I64B
	15	MSPNG SPNG
	Prä	B61B B61C B61D
M86.82	05	F61A
	08	I02A I02B I02C
		I08A I08B I12A
		I12B I12C I13A
		I13B I64A I64B
	15	MSPNG SPNG
	Prä	B61B B61C B61D
M86.83	05	F61A
	08	I02A I02B I02C
		I08A I08B I12A
		I12B I12C I13A
		I13B I64A I64B
	15	MSPNG SPNG
	Prä	B61B B61C B61D
M86.84	05	F61A
	08	I02A I02B I02C
		I08A I08B I13A
		I13B I32A I32B
		I32C I32E I32F
		I64A I64B
	15	MSPNG SPNG
M86.85	05	F61A
	08	I02A I02B I02C
		I03A I03B I04A
		I04B I04C I08A
		I08B I12A I12B
		I12C I13A I13B
		I64A I64B
	15	MSPNG SPNG
	Prä	A95A A95B B61B
		B61C B61D
M86.86	05	F61A
	08	I02A I02B I02C
		I04A I04B I04C
		I08A I08B I12A
		I12B I12C I13A
		I13B I64A I64B
	15	MSPNG SPNG
	Prä	A95A A95B B61B
		B61C B61D
M86.87	05	F61A
	08	I02A I02B I02C
		I08A I08B I13A
		I13B I20C I64A
		I64B
	15	MSPNG SPNG
M86.88	08	I02A I02B I02C
		I08A I08B I13A
		I13B I64A I64B
	15	MSPNG SPNG
M86.89	08	I02A I02B I02C
		I08A I08B I13A
		I13B I64A I64B
	15	MSPNG SPNG
M86.90	05	F61A
	08	I02A I02B I02C
		I08A I08B I12A
		I12B I12C I13A
		I13B I64A I64B
	15	MSPNG SPNG
	Prä	B61B B61C B61D

ICD	MDC	DRG
M86.91	05	F61A
	08	I02A I02B I02C I08A I08B I12A I12B I12C I13A I13B I64A I64B
	15	MSPNG SPNG
	Prä	B61B B61C B61D
M86.92	05	F61A
	08	I02A I02B I02C I08A I08B I12A I12B I12C I13A I13B I64A I64B
	15	MSPNG SPNG
	Prä	B61B B61C B61D
M86.93	05	F61A
	08	I02A I02B I02C I08A I08B I12A I12B I12C I13A I13B I64A I64B
	15	MSPNG SPNG
	Prä	B61B B61C B61D
M86.94	05	F61A
	08	I02A I02B I02C I08A I08B I13A I13B I32A I32B I32C I32E I32F I64A I64B
	15	MSPNG SPNG
M86.95	05	F61A
	08	I02A I02B I02C I03A I03B I04A I04B I04C I08A I08B I12A I12B I12C I13A I13B I64A I64B
	15	MSPNG SPNG
	Prä	A95A A95B B61B B61C B61D
M86.96	05	F61A
	08	I02A I02B I02C I04A I04B I04C I08A I08B I12A I12B I12C I13A I13B I64A I64B
	15	MSPNG SPNG
	Prä	A95A A95B B61B B61C B61D
M86.97	05	F61A
	08	I02A I02B I02C I08A I08B I13A I13B I20C I64A I64B
	15	MSPNG SPNG
M86.98	08	I02A I02B I02C I08A I08B I13A I13B I64A I64B
	15	MSPNG SPNG
M86.99	08	I02A I02B I02C I08A I08B I13A I13B I64A I64B
	15	MSPNG SPNG
M87.00	08	I69A I69B I69C
M87.01	08	I69A I69B I69C
M87.02	08	I69A I69B I69C
	15	MSPNG SPNG
M87.03	08	I69A I69B I69C
M87.04	08	I69A I69B I69C
M87.05	08	I69A I69B I69C
	15	MSPNG SPNG
M87.06	08	I69A I69B I69C
	15	MSPNG SPNG
M87.07	08	I69A I69B I69C
	15	MSPNG SPNG
M87.08	08	I69A I69B I69C
M87.09	08	I69A I69B I69C
	15	MSPNG SPNG
M87.10	08	I02A I02B I02C I08A I08B I13A I13B I64A I64B
	15	MSPNG SPNG
M87.11	08	I02A I02B I02C I08A I08B I13A I13B I64A I64B
	15	MSPNG SPNG
M87.12	08	I02A I02B I02C I08A I08B I13A I13B I64A I64B
	15	MSPNG SPNG
M87.13	08	I02A I02B I02C I08A I08B I13A I13B I64A I64B
	15	MSPNG SPNG
M87.14	08	I02A I02B I02C I08A I08B I13A I13B I32A I32B I32C I32D I32E I32F I64A I64B
	15	MSPNG SPNG
M87.15	08	I02A I02B I02C I08A I08B I13A I13B I64A I64B
	15	MSPNG SPNG
M87.16	08	I02A I02B I02C I08A I08B I13A I13B I64A I64B
	15	MSPNG SPNG
M87.17	08	I02A I02B I02C I08A I08B I13A I13B I64A I64B
	15	MSPNG SPNG
M87.18	08	I02A I02B I02C I08A I08B I13A I13B I64A I64B
	15	MSPNG SPNG
M87.19	08	I02A I02B I02C I08A I08B I13A I13B I64A I64B
	15	MSPNG SPNG
M87.20	08	I02A I02B I02C I08A I08B I13A I13B I64A I64B
	15	MSPNG SPNG
M87.21	08	I02A I02B I02C I08A I08B I13A I13B I64A I64B
	15	MSPNG SPNG
M87.22	08	I02A I02B I02C I08A I08B I13A I13B I64A I64B
	15	MSPNG SPNG
M87.23	08	I02A I02B I02C I08A I08B I13A I13B I64A I64B
	15	MSPNG SPNG
M87.24	08	I02A I02B I02C I08A I08B I13A I13B I32A I32B I32C I32D I32E I32F I64A I64B
	15	MSPNG SPNG
M87.25	08	I02A I02B I02C I08A I08B I13A I13B I64A I64B
	15	MSPNG SPNG
M87.26	08	I02A I02B I02C I08A I08B I13A I13B I64A I64B
	15	MSPNG SPNG
M87.27	08	I02A I02B I02C I08A I08B I13A I13B I64A I64B
	15	MSPNG SPNG
M87.28	08	I02A I02B I02C I08A I08B I13A I13B I64A I64B
	15	MSPNG SPNG
M87.29	08	I02A I02B I02C I08A I08B I13A I13B I64A I64B
	15	MSPNG SPNG
M87.30	08	I02A I02B I02C I08A I08B I13A I13B I64A I64B
	15	MSPNG SPNG
M87.31	08	I02A I02B I02C I08A I08B I13A I13B I64A I64B
	15	MSPNG SPNG
M87.32	08	I02A I02B I02C I08A I08B I13A I13B I64A I64B
	15	MSPNG SPNG
M87.33	08	I02A I02B I02C I08A I08B I13A I13B I64A I64B
	15	MSPNG SPNG
M87.34	08	I02A I02B I02C I08A I08B I13A I13B I32A I32B I32C I32D I32E I32F I64A I64B
	15	MSPNG SPNG
M87.35	08	I02A I02B I02C I08A I08B I13A I13B I64A I64B
	15	MSPNG SPNG
M87.36	08	I02A I02B I02C I08A I08B I13A I13B I64A I64B
	15	MSPNG SPNG
M87.37	08	I02A I02B I02C I08A I08B I13A I13B I64A I64B
	15	MSPNG SPNG
M87.38	08	I02A I02B I02C I08A I08B I13A I13B I64A I64B
	15	MSPNG SPNG
M87.39	08	I02A I02B I02C I08A I08B I13A I13B I64A I64B
	15	MSPNG SPNG
M87.80	08	I02A I02B I02C I08A I08B I13A I13B I64A I64B
	15	MSPNG SPNG
M87.81	08	I02A I02B I02C I08A I08B I13A I13B I64A I64B
	15	MSPNG SPNG

DIAG

ICD	MDC	DRG
M87.82	08	I02A I02B I02C
		I08A I08B I13A
		I13B I64A I64B
	15	MSPNG SPNG
M87.83	08	I02A I02B I02C
		I08A I08B I13A
		I13B I64A I64B
	15	MSPNG SPNG
M87.84	08	I02A I02B I02C
		I08A I08B I13A
		I13B I32A I32B
		I32C I32D I32E
		I32F I64A I64B
	15	MSPNG SPNG
M87.85	08	I02A I02B I02C
		I08A I08B I13A
		I13B I64A I64B
	15	MSPNG SPNG
M87.86	08	I02A I02B I02C
		I08A I08B I13A
		I13B I64A I64B
	15	MSPNG SPNG
M87.87	08	I02A I02B I02C
		I08A I08B I13A
		I13B I64A I64B
	15	MSPNG SPNG
M87.88	08	I02A I02B I02C
		I08A I08B I13A
		I13B I64A I64B
	15	MSPNG SPNG
M87.89	08	I02A I02B I02C
		I08A I08B I13A
		I13B I64A I64B
	15	MSPNG SPNG
M87.90	08	I02A I02B I02C
		I08A I08B I13A
		I13B I64A I64B
	15	MSPNG SPNG
M87.91	08	I02A I02B I02C
		I08A I08B I13A
		I13B I64A I64B
	15	MSPNG SPNG
M87.92	08	I02A I02B I02C
		I08A I08B I13A
		I13B I64A I64B
	15	MSPNG SPNG
M87.93	08	I02A I02B I02C
		I08A I08B I13A
		I13B I64A I64B
	15	MSPNG SPNG
M87.94	08	I02A I02B I02C
		I08A I08B I13A
		I13B I32A I32B
		I32C I32D I32E
		I32F I64A I64B
	15	MSPNG SPNG
M87.95	08	I02A I02B I02C
		I08A I08B I13A
		I13B I64A I64B
	15	MSPNG SPNG
M87.96	08	I02A I02B I02C
		I08A I08B I13A
		I13B I64A I64B
	15	MSPNG SPNG
M87.97	08	I02A I02B I02C
		I08A I08B I13A
		I13B I64A I64B
	15	MSPNG SPNG
M87.98	08	I02A I02B I02C
		I08A I08B I13A
		I13B I64A I64B
	15	MSPNG SPNG
M87.99	08	I02A I02B I02C
		I08A I08B I13A
		I13B I64A I64B
	15	MSPNG SPNG
M88.0	08	I69A I69B I69C
M88.80	08	I69A I69B I69C
M88.81	08	I69A I69B I69C
M88.82	08	I69A I69B I69C
M88.83	08	I69A I69B I69C
M88.84	08	I69A I69B I69C
M88.85	08	I69A I69B I69C
M88.86	08	I69A I69B I69C
M88.87	08	I69A I69B I69C
M88.88	08	I69A I69B I69C
M88.89	08	I69A I69B I69C
M88.90	08	I69A I69B I69C
M88.91	08	I69A I69B I69C
M88.92	08	I69A I69B I69C
M88.93	08	I69A I69B I69C
M88.94	08	I69A I69B I69C
M88.95	08	I69A I69B I69C
M88.96	08	I69A I69B I69C
M88.97	08	I69A I69B I69C
M88.98	08	I69A I69B I69C
M88.99	08	I69A I69B I69C
M89.00	01	B03A B03B B03C
		B71A B71B B71C
M89.01	01	B03A B03B B03C
		B71A B71B B71C
M89.02	01	B03A B03B B03C
		B71A B71B B71C
M89.03	01	B03A B03B B03C
		B71A B71B B71C
M89.04	01	B03A B03B B03C
		B71A B71B B71C
M89.05	01	B03A B03B B03C
		B71A B71B B71C
M89.06	01	B03A B03B B03C
		B71A B71B B71C
M89.07	01	B03A B03B B03C
		B71A B71B B71C
M89.08	01	B03A B03B B03C
		B71A B71B B71C
		B81A B81B B81C
M89.09	01	B81A B81B B81C
M89.10	08	I76A I76B
M89.11	08	I76A I76B
M89.12	08	I76A I76B
M89.13	08	I76A I76B
M89.14	08	I76A I76B
M89.15	08	I76A I76B
M89.16	08	I76A I76B
M89.17	08	I76A I76B
M89.18	08	I76A I76B
M89.19	08	I76A I76B
M89.20	08	I76A I76B
M89.21	08	I76A I76B
M89.22	08	I76A I76B
M89.23	08	I76A I76B
M89.24	08	I76A I76B
M89.25	08	I76A I76B
M89.26	08	I76A I76B
M89.27	08	I76A I76B
M89.28	08	I76A I76B
M89.29	08	I76A I76B
M89.30	08	I76A I76B
M89.31	08	I76A I76B
M89.32	08	I76A I76B
M89.33	08	I76A I76B
M89.34	08	I76A I76B
M89.35	08	I76A I76B
M89.36	08	I76A I76B
M89.37	08	I76A I76B
M89.38	08	I76A I76B
M89.39	08	I76A I76B
M89.40	08	I69A I69B I69C
M89.41	08	I69A I69B I69C
M89.42	08	I69A I69B I69C
M89.43	08	I69A I69B I69C
M89.44	08	I69A I69B I69C
M89.45	08	I69A I69B I69C
M89.46	08	I69A I69B I69C
M89.47	08	I69A I69B I69C
M89.48	08	I69A I69B I69C
M89.49	08	I69A I69B I69C
M89.50	08	I76A I76B
	17	R62A
M89.51	08	I76A I76B
	17	R62A
M89.52	08	I76A I76B
	17	R62A
M89.53	08	I76A I76B
	17	R62A
M89.54	08	I76A I76B
	17	R62A
M89.55	Prä	A95A A95B
	08	I02A I02B I02C
		I03A I03B I04A
		I04B I04C I76A
		I76B
	17	R62A
M89.56	Prä	A95A A95B
	08	I04A I04B I04C
		I76A I76B
	17	R62A
M89.57	08	I76A I76B
	17	R62A
M89.58	08	I76A I76B
	17	R62A
M89.59	08	I76A I76B
	17	R62A
M89.60	08	I02A I02B I02C
		I08A I08B I13A
		I13B I76A I76B
M89.61	08	I02A I02B I02C
		I08A I08B I13A
		I13B I76A I76B
M89.62	08	I02A I02B I02C
		I08A I08B I13A
		I13B I76A I76B
M89.63	08	I02A I02B I02C
		I08A I08B I13A
		I13B I76A I76B
M89.64	08	I02A I02B I02C
		I08A I08B I13A
		I13B I32A I32B
		I32C I32D I32E
		I32F I76A I76B
M89.65	08	I02A I02B I02C
		I08A I08B I13A
		I13B I76A I76B
M89.66	08	I02A I02B I02C
		I08A I08B I13A
		I13B I76A I76B
M89.67	08	I02A I02B I02C
		I08A I08B I13A
		I13B I76A I76B
M89.68	08	I02A I02B I02C

ICD	MDC	DRG
		I08A I08B I13A
		I13B I76A I76B
M89.69	08	I02A I02B I02C
		I08A I08B I13A
		I13B I76A I76B
M89.80	08	I76A I76B
M89.81	08	I76A I76B
M89.82	08	I76A I76B
M89.83	08	I76A I76B
M89.84	08	I76A I76B
M89.85	08	I76A I76B
M89.86	08	I76A I76B
M89.87	08	I76A I76B
M89.88	08	I76A I76B
M89.89	08	I76A I76B
M89.90	08	I76A I76B
M89.91	08	I76A I76B
M89.92	08	I76A I76B
M89.93	08	I76A I76B
M89.94	08	I76A I76B
M89.95	08	I76A I76B
M89.96	08	I76A I76B
M89.97	08	I76A I76B
M89.98	08	I76A I76B
M89.99	08	I76A I76B
M90.00	15	MSPNG SPNG
	Prä	961Z
M90.01	15	MSPNG SPNG
	Prä	961Z
M90.02	15	MSPNG SPNG
	Prä	961Z
M90.03	15	MSPNG SPNG
	Prä	961Z
M90.04	15	MSPNG SPNG
	Prä	961Z
M90.05	15	MSPNG SPNG
	Prä	961Z
M90.06	15	MSPNG SPNG
	Prä	961Z
M90.07	15	MSPNG SPNG
	Prä	961Z
M90.08	15	MSPNG SPNG
	Prä	961Z
M90.09	15	MSPNG SPNG
	Prä	961Z
M90.10	15	MSPNG SPNG
	Prä	961Z
M90.11	15	MSPNG SPNG
	Prä	961Z
M90.12	15	MSPNG SPNG
	Prä	961Z
M90.13	15	MSPNG SPNG
	Prä	961Z
M90.14	15	MSPNG SPNG
	Prä	961Z
M90.15	15	MSPNG SPNG
	Prä	961Z
M90.16	15	MSPNG SPNG
	Prä	961Z
M90.17	15	MSPNG SPNG
	Prä	961Z
M90.18	15	MSPNG SPNG
	Prä	961Z
M90.19	15	MSPNG SPNG
	Prä	961Z
M90.20	15	MSPNG SPNG
	Prä	961Z
M90.21	15	MSPNG SPNG
	Prä	961Z
M90.22	15	MSPNG SPNG
	Prä	961Z
M90.23	15	MSPNG SPNG
	Prä	961Z
M90.24	15	MSPNG SPNG
	Prä	961Z
M90.25	15	MSPNG SPNG
	Prä	961Z
M90.26	15	MSPNG SPNG
	Prä	961Z
M90.27	15	MSPNG SPNG
	Prä	961Z
M90.28	15	MSPNG SPNG
	Prä	961Z
M90.29	15	MSPNG SPNG
	Prä	961Z
M90.30	Prä	961Z
M90.31	Prä	961Z
M90.32	Prä	961Z
M90.33	Prä	961Z
M90.34	Prä	961Z
M90.35	Prä	961Z
M90.36	Prä	961Z
M90.37	Prä	961Z
M90.38	Prä	961Z
M90.39	Prä	961Z
M90.40	Prä	961Z
M90.41	Prä	961Z
M90.42	Prä	961Z
M90.43	Prä	961Z
M90.44	Prä	961Z
M90.45	Prä	961Z
M90.46	Prä	961Z
M90.47	Prä	961Z
M90.48	Prä	961Z
M90.49	Prä	961Z
M90.50	Prä	961Z
M90.51	Prä	961Z
M90.52	Prä	961Z
M90.53	Prä	961Z
M90.54	Prä	961Z
M90.55	Prä	961Z
M90.56	Prä	961Z
M90.57	Prä	961Z
M90.58	Prä	961Z
M90.59	Prä	961Z
M90.60	Prä	961Z
M90.61	Prä	961Z
M90.62	Prä	961Z
M90.63	Prä	961Z
M90.64	Prä	961Z
M90.65	Prä	961Z
M90.66	Prä	961Z
M90.67	Prä	961Z
M90.68	Prä	961Z
M90.69	Prä	961Z
M90.70	15	MSPNG SPNG
	Prä	961Z
M90.71	15	MSPNG SPNG
	Prä	961Z
M90.72	15	MSPNG SPNG
	Prä	961Z
M90.73	15	MSPNG SPNG
	Prä	961Z
M90.74	15	MSPNG SPNG
	Prä	961Z
M90.75	15	MSPNG SPNG
	Prä	961Z
M90.76	15	MSPNG SPNG
	Prä	961Z
M90.77	15	MSPNG SPNG
	Prä	961Z
M90.78	15	MSPNG SPNG
	Prä	961Z
M90.79	15	MSPNG SPNG
	Prä	961Z
M90.80	Prä	961Z
M90.81	Prä	961Z
M90.82	Prä	961Z
M90.83	Prä	961Z
M90.84	Prä	961Z
M90.85	Prä	961Z
M90.86	Prä	961Z
M90.87	Prä	961Z
M90.88	Prä	961Z
M90.89	Prä	961Z
M91.0	08	I69A I69B I69C
M91.1	08	I69A I69B I69C
M91.2	08	I69A I69B I69C
M91.3	08	I69A I69B I69C
M91.8	08	I69A I69B I69C
M91.9	08	I69A I69B I69C
M92.0	08	I69A I69B I69C
M92.1	08	I69A I69B I69C
M92.2	08	I69A I69B I69C
M92.3	08	I69A I69B I69C
M92.4	08	I69A I69B I69C
M92.5	08	I69A I69B I69C
M92.6	08	I69A I69B I69C
M92.7	08	I69A I69B I69C
M92.8	08	I69A I69B I69C
M92.9	08	I69A I69B I69C
M93.0	08	I69A I69B I69C
M93.1	08	I69A I69B I69C
M93.9	08	I69A I69B I69C
M93.20	08	I69A I69B I69C
M93.21	08	I69A I69B I69C
M93.22	08	I69A I69B I69C
M93.23	08	I69A I69B I69C
M93.24	08	I69A I69B I69C
M93.25	08	I69A I69B I69C
M93.26	08	I69A I69B I69C
M93.27	08	I69A I69B I69C
M93.28	08	I69A I69B I69C
M93.29	08	I69A I69B I69C
M93.80	08	I69A I69B I69C
M93.81	08	I69A I69B I69C
M93.82	08	I69A I69B I69C
M93.83	08	I69A I69B I69C
M93.84	08	I69A I69B I69C
M93.85	08	I69A I69B I69C
M93.86	08	I69A I69B I69C
M93.87	08	I69A I69B I69C
M93.88	08	I69A I69B I69C
M93.89	08	I69A I69B I69C
M94.0	04	E75A E75B E75C
M94.1	08	I76A I76B
M94.20	08	I69A I69B I69C
M94.21	08	I69A I69B I69C
M94.22	08	I69A I69B I69C
M94.23	08	I69A I69B I69C
M94.24	08	I69A I69B I69C
M94.25	08	I69A I69B I69C
M94.26	08	I69A I69B I69C
M94.27	08	I69A I69B I69C
M94.28	08	I69A I69B I69C
M94.29	08	I69A I69B I69C
M94.30	08	I76A I76B
M94.31	08	I76A I76B
M94.32	08	I76A I76B
M94.33	08	I76A I76B

DIAG

ICD	MDC	DRG
M94.34	08	I76A I76B
M94.35	08	I76A I76B
M94.36	08	I76A I76B
M94.37	08	I76A I76B
M94.38	08	I76A I76B
M94.39	08	I76A I76B
M94.80	08	I76A I76B
M94.81	08	I76A I76B
M94.82	08	I76A I76B
M94.83	08	I76A I76B
M94.84	08	I76A I76B
M94.85	08	I76A I76B
M94.86	08	I76A I76B
M94.87	08	I76A I76B
M94.88	08	I76A I76B
M94.89	08	I76A I76B
M94.90	08	I76A I76B
M94.91	08	I76A I76B
M94.92	08	I76A I76B
M94.93	08	I76A I76B
M94.94	08	I76A I76B
M94.95	08	I76A I76B
M94.96	08	I76A I76B
M94.97	08	I76A I76B
M94.98	08	I76A I76B
M94.99	08	I76A I76B
M95.0	03	D65Z
M95.1	03	D66A D66B
M95.2	08	I76A I76B
M95.3	08	I76A I76B
M95.4	08	I76A I76B
M95.5	08	I76A I76B
M95.8	08	I76A I76B
M95.9	08	I76A I76B
M96.0	08	I20A I20C I32C
		I76A I76B
M96.1	08	I68A I68B I68C
		I68D
M96.2	08	I09D I68A I68B
		I68C I68D
M96.3	08	I09D I68A I68B
		I68C I68D
M96.4	08	I09D I68A I68B
		I68C I68D
M96.5	08	I09D I68A I68B
		I68C I68D
M96.6	08	I73A I73B
M96.9	08	I02A I02B I02C
		I08A I08B I13A
		I13B I73A I73B
	15	MSPNG SPNG
M96.80	08	I02A I02B I02C
		I08A I08B I13A
		I13B I73A I73B
	15	MSPNG SPNG
M96.81	04	E66A E66B
	15	MSPNG SPNG
M96.82	08	I02A I02B I02C
		I03A I03B I04A
		I04B I04C I08A
		I08B I13A I13B
		I73A I73B
	15	MSPNG SPNG
	Prä	A95A A95B
M96.88	08	I02A I02B I02C
		I08A I08B I13A
		I13B I73A I73B
	15	MSPNG SPNG
M99.00	Prä	961Z
M99.01	Prä	961Z
M99.02	Prä	961Z
M99.03	Prä	961Z
M99.04	Prä	961Z
M99.05	Prä	961Z
M99.06	Prä	961Z
M99.07	Prä	961Z
M99.08	Prä	961Z
M99.09	Prä	961Z
M99.10	Prä	961Z
M99.11	Prä	961Z
M99.12	Prä	961Z
M99.13	Prä	961Z
M99.14	Prä	961Z
M99.19	Prä	961Z
M99.20	Prä	961Z
M99.21	Prä	961Z
M99.22	Prä	961Z
M99.23	Prä	961Z
M99.24	Prä	961Z
M99.29	Prä	961Z
M99.30	08	I68A I68B I68C
		I68D
M99.31	08	I68A I68B I68C
		I68D
M99.32	08	I68A I68B I68C
		I68D
M99.33	08	I68A I68B I68C
		I68D
M99.34	08	I68A I68B I68C
		I68D
M99.39	08	I68A I68B I68C
		I68D
M99.40	08	I68A I68B I68C
		I68D
M99.41	08	I68A I68B I68C
		I68D
M99.42	08	I68A I68B I68C
		I68D
M99.43	08	I68A I68B I68C
		I68D
M99.44	08	I68A I68B I68C
		I68D
M99.49	08	I68A I68B I68C
		I68D
M99.50	08	I68A I68B I68C
		I68D
M99.51	08	I68A I68B I68C
		I68D
M99.52	08	I68A I68B I68C
		I68D
M99.53	08	I68A I68B I68C
		I68D
M99.59	08	I68A I68B I68C
		I68D
M99.60	08	I68A I68B I68C
		I68D
M99.61	08	I68A I68B I68C
		I68D
M99.62	08	I68A I68B I68C
		I68D
M99.63	08	I68A I68B I68C
		I68D
M99.64	08	I68A I68B I68C
		I68D
M99.69	08	I68A I68B I68C
		I68D
M99.70	08	I68A I68B I68C
		I68D
M99.71	08	I68A I68B I68C
		I68D
M99.72	08	I68A I68B I68C
		I68D
M99.73	08	I68A I68B I68C
		I68D
M99.74	08	I68A I68B I68C
		I68D
M99.79	08	I68A I68B I68C
		I68D
M99.80	Prä	961Z
M99.81	Prä	961Z
M99.82	Prä	961Z
M99.83	Prä	961Z
M99.84	Prä	961Z
M99.85	Prä	961Z
M99.86	Prä	961Z
M99.87	Prä	961Z
M99.88	Prä	961Z
M99.89	Prä	961Z
M99.90	Prä	961Z
M99.91	Prä	961Z
M99.92	Prä	961Z
M99.93	Prä	961Z
M99.94	Prä	961Z
M99.95	Prä	961Z
M99.96	Prä	961Z
M99.97	Prä	961Z
M99.98	Prä	961Z
M99.99	Prä	961Z
N00.0	Prä	A11C
	11	L68A L68B L68C
N00.1	Prä	A11C
	11	L68A L68B L68C
N00.2	Prä	A11C
	11	L68A L68B L68C
N00.3	Prä	A11C
	11	L68A L68B L68C
N00.4	Prä	A11C
	11	L68A L68B L68C
N00.5	Prä	A11C
	11	L68A L68B L68C
N00.6	Prä	A11C
	11	L68A L68B L68C
N00.7	Prä	A11C
	11	L68A L68B L68C
N00.8	Prä	A11C
	11	L68A L68B L68C
N00.9	Prä	A11C
	11	L68A L68B L68C
N01.0	11	L68A L68B L68C
N01.1	11	L68A L68B L68C
N01.2	11	L68A L68B L68C
N01.3	11	L68A L68B L68C
N01.4	11	L68A L68B L68C
N01.5	11	L68A L68B L68C
N01.6	11	L68A L68B L68C
N01.7	11	L68A L68B L68C
N01.8	11	L68A L68B L68C
N01.9	11	L68A L68B L68C
N02.0	11	L64A L64B L68B
N02.1	11	L64A L64B L68B
N02.2	11	L64A L64B L68B
N02.3	11	L64A L64B L68B
N02.4	11	L64A L64B L68B
N02.5	11	L64A L64B L68B
N02.6	11	L64A L64B L68B
N02.7	11	L64A L64B L68B
N02.8	11	L64A L64B L68B
N02.9	11	L64A L64B L68B
N03.0	11	L68A L68B L68C
N03.1	11	L68A L68B L68C

ICD	MDC	DRG
N03.2	11	L68A L68B L68C
N03.3	11	L68A L68B L68C
N03.4	11	L68A L68B L68C
N03.5	11	L68A L68B L68C
N03.6	11	L68A L68B L68C
	15	MSPNG SPNG
N03.7	11	L68A L68B L68C
N03.8	11	L68A L68B L68C
N03.9	11	L68A L68B L68C
N04.0	11	L68B L69A L69B
	15	MSPNG SPNG
N04.1	11	L68B L69A L69B
	15	MSPNG SPNG
N04.2	11	L68B L69A L69B
	15	MSPNG SPNG
N04.3	11	L68B L69A L69B
	15	MSPNG SPNG
N04.4	11	L68B L69A L69B
	15	MSPNG SPNG
N04.5	11	L68B L69A L69B
	15	MSPNG SPNG
N04.6	11	L68B L69A L69B
	15	MSPNG SPNG
N04.7	11	L68B L69A L69B
	15	MSPNG SPNG
N04.8	11	L68B L69A L69B
	15	MSPNG SPNG
N04.9	11	L68B L69A L69B
	15	MSPNG SPNG
N05.0	Prä	A11C
	11	L68A L68B L68C
N05.1	11	L68A L68B L68C
N05.2	11	L68A L68B L68C
N05.3	11	L68A L68B L68C
N05.4	11	L68A L68B L68C
N05.5	11	L68A L68B L68C
N05.6	11	L68A L68B L68C
N05.7	11	L68A L68B L68C
N05.8	11	L68A L68B L68C
N05.9	11	L68A L68B L68C
N06.0	11	L68A L68B L68C
N06.1	11	L68A L68B L68C
N06.2	11	L68A L68B L68C
N06.3	11	L68A L68B L68C
N06.4	11	L68A L68B L68C
N06.5	11	L68A L68B L68C
N06.6	11	L68A L68B L68C
N06.7	11	L68A L68B L68C
N06.8	11	L68A L68B L68C
N06.9	11	L68A L68B L68C
N07.0	11	L68A L68B L68C
N07.1	11	L68A L68B L68C
N07.2	11	L68A L68B L68C
N07.3	11	L68A L68B L68C
N07.4	11	L68A L68B L68C
N07.5	11	L68A L68B L68C
N07.6	11	L68A L68B L68C
N07.7	11	L68A L68B L68C
N07.8	11	L68A L68B L68C
N07.9	11	L68A L68B L68C
N08.0	Prä	961Z
	11	L68B
N08.1	Prä	961Z
	11	L68B
N08.2	Prä	961Z
	11	L68B
N08.3	10	K60B
	11	L68B
	15	MSPNG SPNG
	Prä	961Z
N08.4	Prä	961Z
	11	L68B
N08.5	Prä	961Z
	11	L68B
N08.8	Prä	961Z
	11	L68B
N10	11	L20C L63A L63B
		L63C L63D L68B
	15	MSPNG SPNG
	Prä	A11C
N11.0	11	L63A L63B L63C
		L63D L68B
N11.1	11	L63A L63B L63C
		L63D L68B
N11.8	11	L63A L63B L63C
		L63D L68B
N11.9	11	L63A L63B L63C
		L63D L68B
N12	11	L63A L63B L63C
		L63D L68B
	15	MSPNG SPNG
N13.0	11	L64A L64B L64C
		L68B
N13.1	11	L64A L64B L64C
		L68B
N13.3	Prä	A11C
	11	L64A L64B L64C
		L68B
N13.4	11	L64A L64B L64C
		L68B
N13.5	11	L64A L64B L64C
		L68B
	15	MSPNG SPNG
N13.7	11	L64A L64B L68B
N13.8	11	L63A L63B L63C
		L63D L68B
	15	MSPNG SPNG
N13.9	11	L64A L64B L68B
	15	MSPNG SPNG
N13.20	11	L42A L42B L64A
		L64B L64C L68B
N13.21	11	L42A L42B L64A
		L64B L64C L68B
N13.29	11	L42A L42B L64A
		L64B L64C L68B
N13.60	11	L20C L63A L63B
		L63C L63D L68B
N13.61	11	L20C L63A L63B
		L63C L63D L68B
N13.62	11	L20C L63A L63B
		L63C L63D L68B
N13.63	11	L20C L63A L63B
		L63C L63D L68B
N13.64	11	L20C L63A L63B
		L63C L63D L68B
N13.65	11	L20C L63A L63B
		L63C L63D L68B
N13.66	11	L20C L63A L63B
		L63C L63D L68B
N13.67	11	L20C L63A L63B
		L63C L63D L68B
N13.68	11	L20C L63A L63B
		L63C L63D L68B
N14.0	11	L68A L68B L68C
N14.1	11	L68A L68B L68C
N14.2	11	L68A L68B L68C
N14.3	11	L68A L68B L68C
N14.4	11	L68A L68B L68C
N15.0	11	L68A L68B L68C
N15.8	11	L68A L68B L68C
N15.9	11	L68A L68B L68C
N15.10	11	L63A L63B L63C
		L63D L68B
	15	MSPNG SPNG
N15.11	11	L20C L63A L63B
		L63C L63D L68B
	15	MSPNG SPNG
N16.0	Prä	961Z
	11	L68B
N16.1	Prä	961Z
	11	L68B
N16.2	Prä	961Z
	11	L68B
N16.3	Prä	961Z
	11	L68B
N16.4	Prä	961Z
	11	L68B
N16.5	Prä	961Z
	11	L68B
N16.8	Prä	961Z
	11	L68B
N17.01	11	L60A L60B L60C
		L60D L60E L68B
		L71Z
	15	MSPNG SPNG
N17.02	11	L60A L60B L60C
		L60D L60E L68B
		L71Z
	15	MSPNG SPNG
N17.03	05	F62A F66A
	11	L60A L60B L60C
		L60D L68B L71Z
	15	MSPNG SPNG
	Prä	A11C
N17.09	11	L60A L60B L60C
		L60D L60E L68B
		L71Z
	15	MSPNG SPNG
N17.11	11	L60A L60B L60C
		L60D L60E L68B
		L71Z
	15	MSPNG SPNG
N17.12	11	L60A L60B L60C
		L60D L60E L68B
		L71Z
	15	MSPNG SPNG
N17.13	05	F62A F66A
	11	L60A L60B L60C
		L60D L68B L71Z
	15	MSPNG SPNG
	Prä	A11C
N17.19	11	L60A L60B L60C
		L60D L60E L68B
		L71Z
	15	MSPNG SPNG
N17.21	11	L60A L60B L60C
		L60D L60E L68B
		L71Z
	15	MSPNG SPNG
N17.22	11	L60A L60B L60C
		L60D L60E L68B
		L71Z
	15	MSPNG SPNG
N17.23	05	F62A F66A
	11	L60A L60B L60C
		L60D L68B L71Z
	15	MSPNG SPNG
	Prä	A11C
N17.29	11	L60A L60B L60C
		L60D L60E L68B

DIAG

ICD	MDC	DRG
		L71Z
	15	MSPNG SPNG
N17.81	11	L60A L60B L60C
		L60D L60E L68B
		L71Z
	15	MSPNG SPNG
N17.82	11	L60A L60B L60C
		L60D L60E L68B
		L71Z
	15	MSPNG SPNG
N17.83	05	F62A F66A
	11	L60A L60B L60C
		L60D L68B L71Z
	15	MSPNG SPNG
	Prä	A11C
N17.89	11	L60A L60B L60C
		L60D L60E L68B
		L71Z
	15	MSPNG SPNG
N17.91	11	L60A L60B L60C
		L60D L60E L68B
		L71Z
	15	MSPNG SPNG
N17.92	11	L60A L60B L60C
		L60D L60E L68B
		L71Z
	15	MSPNG SPNG
N17.93	05	F62A F66A
	11	L60A L60B L60C
		L60D L68B L71Z
	15	MSPNG SPNG
	Prä	A11C
N17.99	11	L60A L60B L60C
		L60D L60E L68B
		L71Z
	15	MSPNG SPNG
N18.1	09	J60A
	11	L60A L60B L60C
		L60D L60E L68B
		L71Z
	15	MSPNG SPNG
N18.2	09	J60A
	11	L60A L60B L60C
		L60D L60E L68B
		L71Z
	15	MSPNG SPNG
N18.3	09	J60A
	11	L60A L60B L60C
		L60D L60E L68B
		L71Z
	15	MSPNG SPNG
N18.4	09	J60A
	11	L60A L60B L60C
		L60D L60E L68B
		L71Z
	15	MSPNG SPNG
	Prä	A11C
N18.5	Prä	A11C
	09	J60A
	10	K60B
	11	L60A L60B L60C
		L60D L60E L68B
		L71Z
N18.9	09	J60A
	11	L60A L60B L60C
		L60D L60E L68B
		L71Z
	15	MSPNG SPNG
N18.80	09	J60A
	11	L60A L60B L60C

ICD	MDC	DRG
		L60D L60E L68B
		L71Z
	15	MSPNG SPNG
N18.89	09	J60A
	11	L60A L60B L60C
		L60D L60E L68B
		L71Z
	15	MSPNG SPNG
N19	11	L60A L60B L60C
		L60D L60E L68B
		L71Z
	15	MSPNG SPNG
N20.0	11	L42A L42B L64A
		L64B L64C L68B
	15	MSPNG SPNG
N20.1	11	L42A L42B L64A
		L64B L64C L68B
N20.2	11	L42A L42B L64A
		L64B L64C L68B
	15	MSPNG SPNG
N20.9	11	L42A L42B L64A
		L64B L64C L68B
N21.0	11	L42A L42B L64A
		L64B L64C L68B
N21.1	11	L42A L42B L64A
		L64B L64C L68B
N21.8	11	L42A L42B L64A
		L64B L64C L68B
N21.9	11	L42A L42B L64A
		L64B L64C L68B
N22.0	Prä	961Z
	11	L68B
N22.8	Prä	961Z
	11	L68B
N23	11	L64A L64B L64C
		L68B
N25.0	11	L68A L68B L68C
N25.1	11	L68A L68B L68C
	15	MSPNG SPNG
	Prä	A11C
N25.8	11	L68A L68B L68C
N25.9	11	L68A L68B L68C
N26	11	L64A L64B L68B
N27.0	11	L68A L68B L68C
N27.1	11	L68A L68B L68C
N27.9	11	L68A L68B L68C
N28.0	11	L68B L69A L69B
	15	MSPNG SPNG
N28.1	11	L68A L68B L68C
N28.9	11	L68A L68B L68C
N28.80	11	L68A L68B L68C
N28.88	11	L68A L68B L68C
N29.0	Prä	961Z
	11	L68B
N29.1	Prä	961Z
	11	L68B
N29.8	Prä	961Z
	11	L68B
N30.0	11	L20C L63A L63B
		L63C L63D
N30.1	11	L64A L64B L64C
N30.2	11	L63A L63B L63C
		L63D
N30.3	11	L63A L63B L63C
		L63D
N30.4	11	L62A L62B
N30.8	11	L63A L63B L63C
		L63D
N30.9	11	L63A L63B L63C
		L63D

ICD	MDC	DRG
N31.0	11	L68A L68B L68C
N31.1	11	L68A L68B L68C
N31.2	11	L68A L68B L68C
N31.9	11	L68A L68B L68C
N31.80	11	L68A L68B L68C
N31.81	11	L68A L68B L68C
N31.82	11	L68A L68B L68C
N31.88	11	L68A L68B L68C
N32.0	11	L68A L68B L68C
N32.1	11	L68A L68B L68C
	15	MSPNG SPNG
N32.2	11	L68A L68B L68C
	15	MSPNG SPNG
N32.3	11	L68A L68B L68C
	15	MSPNG SPNG
N32.4	11	L68A L68B L68C
	15	MSPNG SPNG
N32.8	11	L68A L68B L68C
N32.9	11	L68A L68B L68C
N33.0	Prä	961Z
N33.8	Prä	961Z
N34.0	11	L63A L63B L63C
		L63D
	15	MSPNG SPNG
N34.1	11	L63A L63B L63C
		L63D
N34.2	11	L63A L63B L63C
		L63D
N34.3	11	L63A L63B L63C
		L63D
N35.0	11	L64A L64B
N35.1	11	L64A L64B
N35.8	11	L64A L64B
	15	MSPNG SPNG
N35.9	11	L64A L64B
N36.0	11	L68A L68B L68C
	15	MSPNG SPNG
N36.1	11	L68A L68B L68C
	15	MSPNG SPNG
N36.2	11	L68A L68B L68C
N36.3	11	L68A L68B L68C
N36.8	11	L68A L68B L68C
N36.9	11	L68A L68B L68C
N37.0	Prä	961Z
N37.8	Prä	961Z
N39.0	11	L63A L63B L63C
		L63D
	15	MSPNG SPNG
N39.1	11	L64A L64B
N39.2	11	L64A L64B
N39.3	11	L64A L64B
N39.9	11	L64A L64B
N39.40	11	L64A L64B
N39.41	11	L64A L64B
N39.42	11	L64A L64B
N39.43	11	L64A L64B
N39.47	11	L64A L64B
N39.48	11	L64A L64B
N39.81	11	L64A L64B
N39.88	11	L64A L64B
N40	12	M61Z
N41.0	12	M62A M62B
N41.1	12	M62A M62B
N41.2	12	M62A M62B
N41.3	12	M62A M62B
N41.8	12	M62A M62B
N41.9	12	M62A M62B
N42.0	12	M64Z
N42.1	12	M64Z
N42.2	12	M64Z

ICD	MDC	DRG
N42.3	12	M09A M09B M37Z
		M60A M60B
N42.8	12	M64Z
N42.9	12	M64Z
N43.0	12	M64Z
N43.1	12	M62A M62B
	15	MSPNG SPNG
N43.2	12	M64Z
N43.3	12	M64Z
N43.4	12	M64Z
N44.0	12	M64Z
	15	MSPNG SPNG
N44.1	12	M64Z
	15	MSPNG SPNG
N45.0	12	M62A M62B
	15	MSPNG SPNG
N45.9	12	M62A M62B
N46	12	M64Z
N47	12	M62A M62B
N48.0	12	M64Z
N48.1	12	M62A M62B
N48.2	12	M62A M62B
N48.4	12	M64Z
N48.5	12	M64Z
N48.6	12	M62A M62B
N48.8	12	M64Z
N48.9	12	M64Z
N48.30	12	M64Z
N48.31	12	M64Z
N48.38	12	M64Z
N48.39	12	M64Z
N49.0	12	M62A M62B
N49.1	12	M62A M62B
N49.2	12	M62A M62B
N49.9	12	M62A M62B
N49.80	Prä	A11C
	12	M09A M09B M37Z
		M62A M62B
N49.88	12	M62A M62B
N50.0	12	M64Z
N50.1	12	M64Z
N50.8	12	M64Z
N50.9	12	M64Z
N51.0	Prä	961Z
N51.1	Prä	961Z
N51.2	Prä	961Z
N51.8	Prä	961Z
N60.0	09	J67Z
N60.1	09	J67Z
N60.2	09	J67Z
N60.3	09	J67Z
N60.4	09	J67Z
N60.8	09	J67Z
N60.9	09	J67Z
N61	09	J67Z
N62	09	J67Z
N63	09	J67Z
N64.0	09	J67Z
N64.1	09	J67Z
N64.2	09	J67Z
N64.3	09	J67Z
N64.4	09	J67Z
N64.5	09	J67Z
N64.8	09	J67Z
N64.9	09	J67Z
N70.0	13	N04A N04B N04C
		N07A N07B N33Z
		N61Z
N70.1	13	N04A N04B N04C
		N07A N07B N33Z
		N61Z
N70.9	13	N04A N04B N04C
		N07A N07B N33Z
		N61Z
N71.0	13	N04A N04B N04C
		N07A N07B N33Z
		N61Z
N71.1	13	N04A N04B N04C
		N07A N07B N33Z
		N61Z
N71.9	13	N04A N04B N04C
		N07A N07B N33Z
		N61Z
N72	13	N61Z
N73.0	13	N04A N04B N04C
		N07A N07B N33Z
		N61Z
N73.1	13	N04A N04B N04C
		N07A N07B N33Z
		N61Z
N73.2	13	N04A N04B N04C
		N07A N07B N33Z
		N61Z
N73.3	13	N04A N04B N04C
		N07A N07B N33Z
		N61Z
N73.4	13	N04A N04B N04C
		N07A N07B N33Z
		N61Z
N73.5	13	N04A N04B N04C
		N07A N07B N33Z
		N61Z
N73.6	13	N04A N04B N04C
		N07A N07B N33Z
		N62A N62B
N73.8	13	N04A N04B N04C
		N07A N07B N33Z
		N61Z
N73.9	13	N04A N04B N04C
		N07A N07B N33Z
		N61Z
N74.0	Prä	961Z
N74.1	Prä	961Z
N74.2	Prä	961Z
N74.3	Prä	961Z
N74.4	Prä	961Z
N74.8	Prä	961Z
N75.0	13	N62B
N75.1	13	N61Z
N75.8	13	N61Z
N75.9	13	N61Z
N76.0	13	N61Z
N76.1	13	N61Z
N76.2	13	N61Z
N76.3	13	N61Z
N76.4	13	N61Z N86A
	15	MSPNG SPNG
N76.5	13	N61Z
N76.6	13	N62A N62B
N76.80	Prä	A11C
	13	N61Z N86A
N76.88	13	N61Z
N77.0	Prä	961Z
N77.1	Prä	961Z
N77.8	Prä	961Z
N77.21	Prä	961Z
N77.22	Prä	961Z
N77.23	Prä	961Z A93A A97A
		A97B A97C A97D
	17	R50A R60A R60B
		R61A R61B R61C
N80.0	13	N04A N04B N04C
		N07A N07B N33Z
		N62A N62B
N80.1	13	N04A N04B N04C
		N07A N07B N33Z
		N62A N62B
N80.2	13	N04A N04B N04C
		N07A N07B N33Z
		N62A N62B
N80.3	13	N04A N04B N04C
		N07A N07B N33Z
		N62A N62B
N80.4	13	N04A N04B N04C
		N07A N07B N33Z
		N62A N62B
N80.5	06	G17B G67A G67B
		G67C G67D
	13	N04A N04B N33Z
N80.6	09	J67Z
N80.8	13	N04A N04B N04C
		N07A N07B N33Z
		N62A N62B
N80.9	13	N04A N04B N04C
		N07A N07B N33Z
		N62A N62B
N81.0	13	N62A N62B
N81.1	13	N62A N62B
N81.2	13	N62A N62B
N81.3	13	N62A N62B
N81.4	13	N62A N62B
N81.5	13	N62A N62B
N81.6	13	N62A N62B
N81.8	13	N62A N62B
N81.9	13	N62A N62B
N82.0	06	G35A G35B
	13	N62A N62B
	15	MSPNG SPNG
N82.1	13	N62A N62B
	15	MSPNG SPNG
N82.2	06	G35A G35B G71A
		G71B
	15	MSPNG SPNG
N82.3	06	G35A G35B G71A
		G71B
	15	MSPNG SPNG
N82.4	06	G35A G35B G71A
		G71B
	15	MSPNG SPNG
N82.5	13	N62A N62B
	15	MSPNG SPNG
N82.9	13	N62A N62B
	15	MSPNG SPNG
N82.80	13	N62A N62B
	15	MSPNG SPNG
N82.81	13	N62A N62B
	15	MSPNG SPNG
N82.88	13	N62A N62B
	15	MSPNG SPNG
N83.0	13	N62B
N83.1	13	N62B
N83.2	13	N62B
N83.3	13	N62A N62B
N83.4	13	N62A N62B
N83.5	13	N62B
	15	MSPNG SPNG
N83.6	13	N62A N62B
N83.7	13	N62A N62B
N83.8	13	N62B
N83.9	13	N62B

DIAG

ICD	MDC	DRG
N84.0	13	N62A N62B
N84.1	13	N62A N62B
N84.2	13	N62A N62B
N84.3	13	N62A N62B
N84.8	13	N62A N62B
N84.9	13	N62A N62B
N85.0	13	N62A N62B
N85.1	13	N62A N62B
N85.2	13	N62A N62B
N85.3	13	N62A N62B
N85.4	13	N62A N62B
N85.5	13	N62A N62B
N85.6	13	N62A N62B
N85.7	13	N62A N62B
N85.8	13	N62A N62B
N85.9	13	N62A N62B
N86	13	N62B
N87.0	13	N62A N62B
N87.1	13	N62A N62B
N87.2	13	N62A N62B
N87.9	13	N62A N62B
N88.0	13	N62A N62B
N88.1	13	N62A N62B
N88.2	13	N62A N62B
N88.3	13	N62A N62B
N88.4	13	N62A N62B
N88.8	13	N62A N62B
N88.9	13	N62A N62B
N89.0	13	N62A N62B
N89.1	13	N62A N62B
N89.2	13	N62A N62B
N89.3	13	N62A N62B
N89.4	13	N62A N62B
N89.5	13	N62A N62B
N89.6	13	N62A N62B
N89.7	13	N62A N62B
N89.8	13	N62A N62B
N89.9	13	N62A N62B
N90.0	13	N62A N62B
N90.1	13	N62A N62B
N90.2	13	N62A N62B
N90.3	13	N62A N62B
N90.4	13	N62A N62B
N90.5	13	N62A N62B
N90.6	13	N62A N62B
N90.7	13	N62A N62B
N90.8	13	N62A N62B
N90.9	13	N62A N62B
N91.0	13	N62A N62B
N91.1	13	N62A N62B
N91.2	13	N62A N62B
N91.3	13	N62A N62B
N91.4	13	N62A N62B
N91.5	13	N62A N62B
N92.0	13	N62B
N92.1	13	N62B
N92.2	13	N62B
N92.3	13	N62B
N92.4	13	N62B
N92.5	13	N62B
N92.6	13	N62B
N93.0	13	N62A N62B
N93.8	13	N62A N62B
N93.9	13	N62A N62B
N94.0	13	N62B
N94.1	13	N62B
N94.2	13	N62A N62B
N94.3	13	N62B
N94.4	13	N62B
N94.5	13	N62B
N94.6	13	N62B
N94.8	13	N62B
N94.9	13	N62B
N95.0	13	N62A N62B
N95.1	13	N62A N62B
N95.2	13	N62A N62B
N95.3	13	N62A N62B
N95.8	13	N62A N62B
N95.9	13	N62A N62B
N96	13	N62B
N97.0	13	N62A N62B
N97.1	13	N62A N62B
N97.2	13	N62A N62B
N97.3	13	N62A N62B
N97.4	13	N62A N62B
N97.8	13	N62A N62B
N97.9	13	N62A N62B
N98.0	11	L68A L68B L68C
N98.1	21B	X62A X62B
N98.2	21B	X62A X62B
N98.3	21B	X62A X62B
N98.8	21B	X62A X62B
N98.9	21B	X62A X62B
N99.0	11	L60A L60B L60C
		L60D L60E L71Z
N99.2	13	N62A N62B
N99.3	13	N62A N62B
N99.4	12	M64Z
	13	N62A N62B
N99.5	11	L68A L68B L68C
N99.8	11	L68A L68B L68C
N99.9	12	M64Z
	13	N62A N62B
N99.10	11	L64A L64B
	15	MSPNG SPNG
N99.18	11	L64A L64B
	15	MSPNG SPNG
O00.0	14	O04Z
O00.1	14	O04Z
O00.2	14	O04Z
O00.8	14	O04Z
O00.9	14	O04Z
O01.0	14	O04Z
O01.1	14	O04Z
O01.9	14	O04Z
O02.0	14	O04Z
O02.1	14	O04Z
O02.8	14	O04Z
O02.9	14	O04Z
O03.0	14	O04Z
O03.1	14	O04Z
O03.2	14	O04Z
O03.3	14	O04Z
O03.4	14	O04Z
O03.5	14	O04Z
O03.6	14	O04Z
O03.7	14	O04Z
O03.8	14	O04Z
O03.9	14	O04Z
O04.0	14	O04Z
O04.1	14	O04Z
O04.2	14	O04Z
O04.3	14	O04Z
O04.4	14	O04Z
O04.5	14	O04Z
O04.6	14	O04Z
O04.7	14	O04Z
O04.8	14	O04Z
O04.9	14	O04Z
O05.0	14	O04Z
O05.1	14	O04Z
O05.2	14	O04Z
O05.3	14	O04Z
O05.4	14	O04Z
O05.5	14	O04Z
O05.6	14	O04Z
O05.7	14	O04Z
O05.8	14	O04Z
O05.9	14	O04Z
O06.0	14	O04Z
O06.1	14	O04Z
O06.2	14	O04Z
O06.3	14	O04Z
O06.4	14	O04Z
O06.5	14	O04Z
O06.6	14	O04Z
O06.7	14	O04Z
O06.8	14	O04Z
O06.9	14	O04Z
O07.0	14	O04Z
O07.1	14	O04Z
O07.2	14	O04Z
O07.3	14	O04Z
O07.4	14	O04Z
O07.5	14	O04Z
O07.6	14	O04Z
O07.7	14	O04Z
O07.8	14	O04Z
O07.9	14	O04Z
O08.0	14	O04Z O61Z
O08.1	14	O04Z O61Z
O08.2	14	O04Z O61Z
O08.3	14	O04Z O61Z
O08.4	14	O04Z O61Z
O08.5	14	O04Z O61Z
O08.6	14	O04Z O61Z
O08.7	14	O04Z O61Z
O08.8	14	O04Z O61Z
O08.9	14	O04Z O61Z
O09.0	Prä	961Z
	14	O01B O01C O01E
		O50A O50B O60A
O09.1	Prä	961Z
	14	O01B O01C O01E
		O50A O50B O60A
O09.2	Prä	961Z
	14	O01B O01C O01E
		O50A O50B O60A
O09.3	Prä	961Z
	14	O01B O01C O01E
		O50A O50B O60A
		O65A
O09.4	Prä	961Z
	14	O01B O01C O01E
		O50A O50B O60A
		O65A O65B
O09.5	Prä	961Z
O09.6	Prä	961Z
O09.7	Prä	961Z
O09.9	Prä	961Z
O10.0	14	O04Z O61Z O65A
		O65B O65C O65D
O10.1	14	O04Z O61Z O65A
		O65B O65C O65D
O10.2	14	O01B O01C O01D
		O01E O01F O04Z
		O50A O50B O60A
		O60B O60C O61Z
		O65A O65B O65C
		O65D

ICD	MDC	DRG
O10.3	14	O04Z O61Z O65A O65B O65C O65D
O10.4	14	O04Z O61Z O65A O65B O65C O65D
O10.9	14	O04Z O61Z O65A O65B O65C O65D
O11	14	O01B O01C O01D O01E O01F O04Z O50A O50B O60A O60B O60C O61Z O65A O65B O65C O65D
O12.0	14	O04Z O61Z O65A O65B O65C O65D
O12.1	14	O01B O01C O01D O01E O01F O04Z O50A O50B O60A O60B O60C O61Z O65A O65B O65C O65D
O12.2	14	O01B O01C O01D O01E O01F O04Z O50A O50B O60A O60B O60C O61Z O65A O65B O65C O65D
O13	14	O01B O01C O01D O01E O01F O04Z O50A O50B O60A O60B O60C O61Z O65A O65B O65C O65D
O14.0	14	O01B O01C O01D O01E O01F O04Z O50A O50B O60A O60B O60C O61Z O65A O65B O65C O65D
O14.1	Prä	A11C
	14	O01B O01C O01D O01E O01F O04Z O50A O50B O60A O60B O60C O61Z O65A O65B O65C O65D
O14.2	Prä	A11C
	14	O01B O01C O01D O01E O01F O04Z O50A O50B O60A O60B O60C O61Z O65A O65B O65C O65D
O14.9	14	O01B O01C O01D O01E O01F O04Z O50A O50B O60A O60B O60C O61Z O65A O65B O65C O65D
O15.0	Prä	A11C
	14	O01B O01C O01D O01E O01F O04Z O50A O50B O60A O60B O60C O61Z O65A O65B O65C O65D
O15.1	Prä	A11C
	14	O01B O01C O01D O01E O01F O02A O02B O50A O50B O60A O60B O60C
O15.2	Prä	A11C
	14	O04Z O61Z
O15.9	14	O01B O01C O01D O01E O01F O04Z O50A O50B O60A O60B O60C O61Z O65A O65B O65C O65D
O16	14	O04Z O61Z O65A O65B O65C O65D
O20.0	14	O62Z
O20.8	14	O62Z
O20.9	14	O62Z
O21.0	14	O04Z O61Z O65A O65B O65C O65D
O21.1	14	O04Z O61Z O65A O65B O65C O65D
O21.2	14	O01B O01C O01D O01E O01F O04Z O50A O50B O60A O60B O60C O61Z O65A O65B O65C O65D
O21.8	14	O01B O01C O01D O01E O01F O04Z O50A O50B O60A O60B O60C O61Z O65A O65B O65C O65D
O21.9	14	O01B O01C O01D O01E O01F O04Z O50A O50B O60A O60B O60C O61Z O65A O65B O65C O65D
O22.0	14	O04Z O61Z O65A O65B O65C O65D
O22.1	14	O04Z O61Z O65A O65B O65C O65D
O22.2	14	O04Z O61Z O65A O65B O65C O65D
O22.3	14	O01B O01C O01D O01E O01F O04Z O50A O50B O60A O60B O60C O61Z O65A O65B O65D
O22.4	14	O04Z O61Z O65A O65B O65C O65D
O22.5	14	O01B O01C O01D O01E O01F O04Z O50A O50B O60A O60B O60C O61Z O65A O65B O65D
O22.8	14	O01B O01C O01D O01E O01F O04Z O50A O50B O60A O60B O60C O61Z O65A O65B O65C O65D
O22.9	14	O04Z O61Z O65A O65B O65C O65D
O23.0	14	O04Z O61Z O65A O65B O65C O65D
O23.1	14	O04Z O61Z O65A O65B O65C O65D
O23.2	14	O04Z O61Z O65A O65B O65C O65D
O23.3	14	O04Z O61Z O65A O65B O65C O65D
O23.4	14	O04Z O61Z O65A O65B O65C O65D
O23.5	14	O04Z O61Z O65A O65B O65C O65D
O23.9	14	O04Z O61Z O65A O65B O65C O65D
O24.0	14	O01B O01C O01D O01E O01F O04Z O50A O50B O60A O60B O60C O61Z O65A O65B O65C O65D
O24.1	14	O01B O01C O01D O01E O01F O04Z O50A O50B O60A O60B O60C O61Z O65A O65B O65C O65D
O24.2	14	O01B O01C O01D O01E O01F O04Z O50A O50B O60A O60B O60C O61Z O65A O65B O65C O65D
O24.3	14	O01B O01C O01D O01E O01F O04Z O50A O50B O60A O60B O60C O61Z O65A O65B O65C O65D
O24.4	14	O01B O01C O01D O01E O01F O04Z O50A O50B O60A O60B O60C O61Z O65A O65B O65C O65D
O24.9	14	O01B O01C O01D O01E O01F O04Z O50A O50B O60A O60B O60C O61Z O65A O65B O65C O65D
O25	14	O04Z O61Z O65A O65B O65C O65D
O26.0	14	O04Z O61Z O65A O65B O65C O65D
O26.1	14	O04Z O61Z O65A O65B O65C O65D
O26.2	14	O04Z O61Z O65A O65B O65C O65D
O26.3	14	O04Z O61Z O65A O65B O65C O65D
O26.4	14	O04Z O61Z O65A O65B O65C O65D
O26.5	14	O04Z O61Z O65A O65B O65C O65D
O26.7	14	O01B O01C O01D O01E O01F O04Z O50A O50B O60A O60B O60C O61Z O65A O65B O65C O65D
O26.9	14	O04Z O61Z O65A O65B O65C O65D
O26.60	14	O01B O01C O01D O01E O01F O04Z O50A O50B O60A O60B O60C O61Z O65A O65B O65C O65D
O26.68	14	O01B O01C O01D

DIAG

ICD	MDC	DRG
		O01E O01F O04Z O50A O50B O60A O60B O60C O61Z O65A O65B O65C O65D
O26.81	14	O01B O01C O01D O01E O01F O04Z O50A O50B O60A O60B O60C O61Z O65A O65B O65C O65D
O26.82	14	O04Z O61Z O65A O65B O65C O65D
O26.83	14	O04Z O61Z O65A O65B O65C O65D
O26.88	14	O04Z O61Z O65A O65B O65C O65D
O28.0	14	O65A O65B O65C O65D
O28.1	14	O65A O65B O65C O65D
O28.2	14	O65A O65B O65C O65D
O28.3	14	O65A O65B O65C O65D
O28.4	14	O65A O65B O65C O65D
O28.5	14	O65A O65B O65C O65D
O28.8	14	O65A O65B O65C O65D
O28.9	14	O65A O65B O65C O65D
O29.0	14	O01B O01C O01D O01E O01F O04Z O50A O50B O60A O60B O60C O61Z O65A O65B O65C O65D
O29.1	14	O01B O01C O01D O01E O01F O04Z O50A O50B O60A O60B O60C O61Z O65A O65B O65C O65D
O29.2	14	O01B O01C O01D O01E O01F O04Z O50A O50B O60A O60B O60C O61Z O65A O65B O65C O65D
O29.3	14	O04Z O61Z O65A O65B O65C O65D
O29.4	14	O04Z O61Z O65A O65B O65C O65D
O29.5	14	O04Z O61Z O65A O65B O65C O65D
O29.6	14	O04Z O61Z O65A O65B O65C O65D
O29.8	14	O04Z O61Z O65A O65B O65C O65D
O29.9	14	O04Z O61Z O65A O65B O65C O65D
O30.0	14	O01B O01C O01D O01E O01F O04Z O50A O50B O60A O60B O60C O61Z O65A O65B O65C O65D
O30.1	14	O01B O01C O01D O01E O01F O04Z O50A O50B O60A O60B O60C O61Z O65A O65B O65C O65D
O30.2	14	O01B O01C O01D O01E O01F O04Z O50A O50B O60A O60B O60C O61Z O65A O65B O65C O65D
O30.8	14	O01B O01C O01D O01E O01F O04Z O50A O50B O60A O60B O60C O61Z O65A O65B O65C O65D
O30.9	14	O01B O01C O01D O01E O01F O04Z O50A O50B O60A O60B O60C O61Z O65A O65B O65C O65D
O31.0	14	O04Z O61Z O65A O65B O65C O65D
O31.1	14	O01B O01C O01D O01E O01F O04Z O50A O50B O60A O60B O60C O61Z O65A O65B O65C O65D
O31.2	14	O01B O01C O01D O01E O01F O04Z O50A O50B O60A O60B O60C O61Z O65A O65B O65C O65D
O31.8	14	O01B O01C O01D O01E O01F O04Z O50A O50B O60A O60B O60C O61Z O65A O65B O65C O65D
O32.0	14	O04Z O61Z O65A O65B O65C O65D
O32.1	14	O04Z O61Z O65A O65B O65C O65D
O32.2	14	O04Z O61Z O65A O65B O65C O65D
O32.3	14	O04Z O61Z O65A O65B O65C O65D
O32.4	14	O04Z O61Z O65A O65B O65C O65D
O32.5	14	O01B O01C O01D O01E O01F O04Z O50A O50B O60A O60B O60C O61Z O65A O65B O65C O65D
O32.6	14	O04Z O61Z O65A O65B O65C O65D
O32.8	14	O04Z O61Z O65A O65B O65C O65D
O32.9	14	O04Z O61Z O65A O65B O65C O65D
O33.0	14	O04Z O61Z O65A O65B O65C O65D
O33.1	14	O04Z O61Z O65A O65B O65C O65D
O33.2	14	O04Z O61Z O65A O65B O65C O65D
O33.3	14	O04Z O61Z O65A O65B O65C O65D
O33.4	14	O04Z O61Z O65A O65B O65C O65D
O33.5	14	O04Z O61Z O65A O65B O65C O65D
O33.6	14	O04Z O61Z O65A O65B O65C O65D
O33.7	14	O04Z O61Z O65A O65B O65C O65D
O33.8	14	O04Z O61Z O65A O65B O65C O65D
O33.9	14	O04Z O61Z O65A O65B O65C O65D
O34.0	14	O04Z O61Z O65A O65B O65C O65D
O34.1	14	O04Z O61Z O65A O65B O65D
O34.2	14	O04Z O61Z O65A O65B O65C O65D
O34.4	14	O04Z O61Z O65A O65B O65C O65D
O34.5	14	O04Z O61Z O65A O65B O65C O65D
O34.6	14	O04Z O61Z O65A O65B O65C O65D
O34.7	14	O04Z O61Z O65A O65B O65C O65D
O34.8	14	O04Z O61Z O65A O65B O65C O65D
O34.9	14	O04Z O61Z O65A O65B O65C O65D
O34.30	14	O01B O01C O01D O01E O01F O04Z O50A O50B O60A O60B O60C O61Z O65A O65B O65D
O34.31	14	O01B O01C O01D O01E O01F O04Z O50A O50B O60A O60B O60C O61Z O65A O65B O65C O65D
O34.38	14	O01B O01C O01D O01E O01F O04Z O50A O50B O60A O60B O60C O61Z O65A O65B O65C O65D
O34.39	14	O01B O01C O01D O01E O01F O04Z O50A O50B O60A O60B O60C O61Z O65A O65B O65C O65D
O35.0	14	O04Z O61Z O65A O65B O65C O65D
O35.1	14	O04Z O61Z O65A O65B O65C O65D
O35.2	14	O04Z O61Z O65A O65B O65C O65D
O35.3	14	O04Z O61Z O65A O65B O65C O65D
O35.4	14	O04Z O61Z O65A O65B O65C O65D
O35.5	14	O04Z O61Z O65A O65B O65C O65D
O35.6	14	O04Z O61Z O65A O65B O65C O65D

ICD	MDC	DRG
O35.7	14	O04Z O61Z O65A O65B O65C O65D
O35.8	14	O04Z O61Z O65A O65B O65C O65D
O35.9	14	O04Z O61Z O65A O65B O65C O65D
O36.0	14	O04Z O61Z O65A O65B O65C O65D
O36.1	14	O04Z O61Z O65A O65B O65C O65D
O36.2	14	O04Z O61Z O65A O65B O65C O65D
O36.3	14	O04Z O61Z O65A O65B O65C O65D
O36.4	14	O04Z O61Z O65A O65B O65C O65D
O36.5	14	O01B O01C O01D O01E O01F O04Z O50A O50B O60A O60B O60C O61Z O65A O65B O65C O65D
O36.6	14	O04Z O61Z O65A O65B O65C O65D
O36.7	14	O04Z O61Z O65A O65B O65C O65D
O36.8	14	O04Z O61Z O65A O65B O65C O65D
O36.9	14	O04Z O61Z O65A O65B O65C O65D
O40	14	O01B O01C O01D O01E O01F O04Z O50A O50B O60A O60B O60C O61Z O65A O65B O65C O65D
O41.0	14	O01B O01C O01D O01E O01F O04Z O50A O50B O60A O60B O60C O61Z O65A O65B O65C O65D
O41.1	14	O04Z O61Z O65A O65B O65C O65D
O41.8	14	O04Z O61Z O65A O65B O65C O65D
O41.9	14	O04Z O61Z O65A O65B O65C O65D
O42.0	14	O04Z O61Z O65A O65B O65C O65D
O42.9	14	O04Z O61Z O65A O65B O65C O65D
O42.11	14	O01B O01C O01D O01E O01F O04Z O50A O50B O60A O60B O60C O61Z O65A O65B O65C O65D
O42.12	14	O01B O01C O01D O01E O01F O04Z O50A O50B O60A O60B O60C O61Z O65A O65B O65C O65D
O42.20	14	O04Z O61Z O65A O65B O65C O65D
O42.21	14	O04Z O61Z O65A O65B O65C O65D
O42.22	14	O04Z O61Z O65A O65B O65C O65D
O42.29	14	O04Z O61Z O65A O65B O65C O65D
O43.0	14	O04Z O61Z O65A O65B O65D
O43.1	14	O04Z O61Z O65A O65B O65C O65D
O43.8	14	O04Z O61Z O65A O65B O65C O65D
O43.9	14	O04Z O61Z O65A O65B O65C O65D
O43.20	14	O04Z O61Z
O43.21	14	O04Z O61Z
O44.00	14	O01B O01C O01D O01E O01F O04Z O50A O50B O60A O60B O60C O61Z O65A O65B O65C O65D
O44.01	14	O01B O01C O01D O01E O01F O04Z O50A O50B O60A O60B O60C O61Z O65A O65B O65C O65D
O44.10	14	O01B O01C O01D O01E O01F O04Z O50A O50B O60A O60B O60C O61Z O65A O65B O65C O65D
O44.11	14	O01B O01C O01D O01E O01F O04Z O50A O50B O60A O60B O60C O61Z O65A O65B O65D
O45.0	14	O01B O01C O01D O01E O01F O04Z O50A O50B O60A O60B O60C O61Z O65A O65B O65C O65D
O45.8	14	O04Z O61Z O65A O65B O65C O65D
O45.9	14	O04Z O61Z O65A O65B O65C O65D
O46.0	14	O01B O01C O01D O01E O01F O04Z O50A O50B O60A O60B O60C O61Z O65A O65B O65C O65D
O46.8	14	O04Z O61Z O65A O65B O65C O65D
O46.9	14	O04Z O61Z O65A O65B O65C O65D
O47.0	14	O65A O65B O65C O65D
O47.1	14	O65A O65B O65C O65D
O47.9	Prä	961Z
O48	14	O04Z O61Z O65A O65B O65C O65D
O60.0	14	O65A O65B O65C O65D
O60.1	14	O01B O01C O01D O01E O01F O02A O02B O50A O50B O60A O60B O60C
O60.2	14	O01B O01C O01D O01E O01F O02A O02B O50A O50B O60A O60B O60C
O60.3	14	O01B O01C O01D O01E O01F O02A O02B O50A O50B O60A O60B O60C
O61.0	14	O01B O01C O01D O01E O01F O04Z O50A O50B O60A O60B O60C O61Z O65A O65B O65C O65D
O61.1	14	O65A O65B O65C O65D
O61.8	14	O65A O65B O65C O65D
O61.9	14	O65A O65B O65C O65D
O62.0	14	O01B O01C O01D O01E O01F O04Z O50A O50B O60A O60B O60C O61Z O65A O65B O65C O65D
O62.1	14	O02A O02B O50A O50B O60A O60B O60C O60D
O62.2	14	O65A O65B O65C O65D
O62.3	14	O02A O02B O50A O50B O60A O60B O60C O60D
O62.4	14	O04Z O61Z
O62.8	14	O65A O65B O65C O65D
O62.9	14	O65A O65B O65C O65D
O63.0	14	O02A O50A O50B O60A O60B O60C
O63.1	14	O02A O50A O50B O60A O60B O60C
O63.2	14	O02A O50A O50B O60A O60B O60C
O63.9	14	O02A O02B O50A O50B O60A O60B O60C O60D
O64.0	14	O02A O02B O50A O50B O60A O60B O60C O60D
O64.1	14	O02A O02B O50A O50B O60A O60B O60C O60D
O64.2	14	O02A O02B O50A O50B O60A O60B O60C O60D
O64.3	14	O02A O02B O50A O50B O60A O60B O60C O60D
O64.4	14	O02A O02B O50A O50B O60A O60B O60C O60D
O64.5	14	O02A O02B O50A O50B O60A O60B O60C O60D
O64.8	14	O02A O02B O50A O50B O60A O60B O60C O60D
O64.9	14	O02A O02B O50A O50B O60A O60B O60C O60D

DIAG

ICD	MDC	DRG
O65.0	14	O02A O02B O50A O50B O60A O60B O60C O60D
O65.1	14	O02A O02B O50A O50B O60A O60B O60C O60D
O65.2	14	O02A O02B O50A O50B O60A O60B O60C O60D
O65.3	14	O02A O02B O50A O50B O60A O60B O60C O60D
O65.4	14	O02A O02B O50A O50B O60A O60B O60C O60D
O65.5	14	O02A O02B O50A O50B O60A O60B O60C O60D
O65.8	14	O02A O02B O50A O50B O60A O60B O60C O60D
O65.9	14	O02A O02B O50A O50B O60A O60B O60C O60D
O66.0	14	O02A O02B O50A O50B O60A O60B O60C O60D
O66.1	14	O02A O02B O50A O50B O60A O60B O60C O60D
O66.2	14	O02A O02B O50A O50B O60A O60B O60C O60D
O66.3	14	O02A O02B O50A O50B O60A O60B O60C O60D
O66.4	14	O02A O02B O50A O50B O60A O60B O60C O60D
O66.5	14	O02A O02B O50A O50B O60A O60B O60C O60D
O66.8	14	O02A O02B O50A O50B O60A O60B O60C O60D
O66.9	14	O02A O02B O50A O50B O60A O60B O60C O60D
O67.0	14	O01B O01C O01D O01E O01F O02A O02B O50A O50B O60A O60B O60C
O67.8	14	O01B O01C O01D O01E O01F O02A O02B O50A O50B O60A O60B O60C
O67.9	14	O01B O01C O01D O01E O01F O02A O02B O50A O50B O60A O60B O60C
O68.0	14	O02A O02B O50A O50B O60A O60B O60C O60D
O68.1	14	O02A O02B O50A O50B O60A O60B O60C O60D
O68.2	14	O02A O02B O50A O50B O60A O60B O60C O60D
O68.3	14	O02A O02B O50A O50B O60A O60B O60C O60D
O68.8	14	O02A O02B O50A O50B O60A O60B O60C O60D
O68.9	14	O04Z O61Z
O69.0	14	O02A O02B O50A O50B O60A O60B O60C O60D
O69.1	14	O02A O02B O50A O50B O60A O60B O60C O60D
O69.2	14	O02A O02B O50A O50B O60A O60B O60C O60D
O69.3	14	O02A O02B O50A O50B O60A O60B O60C O60D
O69.4	14	O02A O02B O50A O50B O60A O60B O60C O60D
O69.5	14	O02A O02B O50A O50B O60A O60B O60C O60D
O69.8	14	O02A O02B O50A O50B O60A O60B O60C O60D
O69.9	14	O02A O02B O50A O50B O60A O60B O60C O60D
O70.0	14	O02A O02B O50A O50B O60A O60B O60C O60D
O70.1	14	O02A O02B O50A O50B O60A O60B O60C O60D
O70.2	14	O01B O01C O01D O01E O01F O02A O02B O50A O50B O60A O60B O60C
O70.3	14	O01B O01C O01D O01E O01F O02A O02B O50A O50B O60A O60B O60C
O70.9	14	O02A O02B O50A O50B O60A O60B O60C O60D
O71.0	14	O04Z O61Z O65A O65B O65C O65D
O71.1	14	O02A O02B O50A O50B O60A O60B O60C O60D
O71.2	14	O04Z O61Z
O71.3	14	O02A O02B O50A O50B O60A O60B O60C O60D
O71.4	14	O02A O02B O50A O50B O60A O60B O60C O60D
O71.5	14	O02A O02B O50A O50B O60A O60B O60C O60D
O71.6	14	O01B O01C O01D O01E O01F O02A O02B O50A O50B O60A O60B O60C
O71.7	14	O02A O02B O50A O50B O60A O60B O60C O60D
O71.8	14	O02A O02B O50A O50B O60A O60B O60C O60D
O71.9	14	O02A O02B O50A O50B O60A O60B O60C O60D
O72.0	14	O02A O02B O50A O50B O60A O60B O60C O60D
O72.1	14	O01B O01C O01D O01E O01F O02A O02B O50A O50B O60A O60B O60C
O72.2	14	O04Z O61Z
O72.3	14	O04Z O61Z
O73.0	14	O04Z O61Z
O73.1	14	O04Z O61Z
O74.0	14	O01B O01C O01D O01E O01F O02A O02B O50A O50B O60A O60B O60C
O74.1	14	O01B O01C O01D O01E O01F O02A O02B O50A O50B O60A O60B O60C
O74.2	14	O01B O01C O01D O01E O01F O02A O02B O50A O50B O60A O60B O60C
O74.3	14	O01B O01C O01D O01E O01F O02A O02B O50A O50B O60A O60B O60C
O74.4	14	O01B O01C O01D O01E O01F O02A O02B O50A O50B O60A O60B O60C
O74.5	14	O01B O01C O01D O01E O01F O02A O02B O50A O50B O60A O60B O60C
O74.6	14	O01B O01C O01D O01E O01F O02A O02B O50A O50B O60A O60B O60C
O74.7	14	O01B O01C O01D O01E O01F O02A O02B O50A O50B O60A O60B O60C
O74.8	14	O01B O01C O01D O01E O01F O02A O02B O50A O50B O60A O60B O60C
O74.9	14	O02A O02B O50A O50B O60A O60B O60C O60D
O75.0	14	O02A O02B O50A O50B O60A O60B O60C O60D
O75.1	14	O01B O01C O01D O01E O01F O02A O02B O50A O50B O60A O60B O60C
O75.2	14	O02A O02B O50A O50B O60A O60B O60C O60D
O75.3	14	O02A O02B O50A O50B O60A O60B O60C O60D
O75.4	14	O01B O01C O01D O01E O01F O04Z

ICD	MDC	DRG
		O50A O50B O60A
		O60B O60C O61Z
O75.5	14	O02A O50A O50B
		O60A O60B O60C
O75.6	14	O01B O01C O01D
		O01E O01F O02A
		O50A O50B O60A
		O60B O60C
O75.7	14	O02A O02B O50A
		O50B O60A O60B
		O60C O60D
O75.8	14	O04Z O61Z
O75.9	14	O02A O02B O50A
		O50B O60A O60B
		O60C O60D
O80	14	O02A O02B O50A
		O50B O60A O60B
		O60C O60D
O81	14	O02A O02B O50A
		O50B O60A O60B
		O60C O60D
O82	14	962Z
O85	14	O01B O01C O01D
		O01E O01F O04Z
		O50A O50B O60A
		O60B O60C O61Z
O86.0	14	O01B O01C O01D
		O01E O01F O04Z
		O50A O50B O60A
		O60B O60C O61Z
O86.1	14	O04Z O61Z
O86.2	14	O04Z O61Z
O86.3	14	O04Z O61Z
O86.4	14	O04Z O61Z
O86.8	14	O04Z O61Z
O87.0	14	O04Z O61Z
O87.1	14	O04Z O61Z
O87.2	14	O04Z O61Z
O87.3	14	O04Z O61Z
O87.8	14	O04Z O61Z
O87.9	14	O04Z O61Z
O88.0	14	O04Z O61Z
O88.1	14	O04Z O61Z
O88.3	14	O04Z O61Z
O88.8	14	O04Z O61Z
O88.20	14	O01A O01B O01C
		O01D O01E O01F
		O01G O61Z
O88.28	14	O01A O01B O01C
		O01D O01E O01F
		O01G O61Z
O89.0	14	O01B O01C O01D
		O01E O01F O04Z
		O50A O50B O60A
		O60B O60C O61Z
O89.1	14	O04Z O61Z
O89.2	14	O04Z O61Z
O89.3	14	O04Z O61Z
O89.4	14	O04Z O61Z
O89.5	14	O04Z O61Z
O89.6	14	O04Z O61Z
O89.8	14	O04Z O61Z
O89.9	14	O04Z O61Z
O90.0	14	O01B O01C O01D
		O01E O01F O04Z
		O50A O50B O60A
		O60B O60C O61Z
O90.1	14	O01B O01C O01D
		O01E O01F O04Z
		O50A O50B O60A
		O60B O60C O61Z
O90.2	14	O04Z O61Z
O90.3	14	O01B O01C O01D
		O01E O01F O04Z
		O50A O50B O60A
		O60B O60C O61Z
O90.4	14	O04Z O61Z
O90.5	14	O04Z O61Z
O90.8	14	O04Z O61Z
O90.9	14	O04Z O61Z
O91.00	14	O04Z O61Z
O91.01	14	O04Z O61Z
O91.10	14	O04Z O61Z
O91.11	14	O04Z O61Z
O91.20	14	O04Z O61Z
O91.21	14	O04Z O61Z
O92.00	14	O04Z O61Z
O92.01	14	O04Z O61Z
O92.10	14	O04Z O61Z
O92.11	14	O04Z O61Z
O92.20	14	O04Z O61Z
O92.21	14	O04Z O61Z
O92.30	14	O04Z O61Z
O92.31	14	O04Z O61Z
O92.40	14	O04Z O61Z
O92.41	14	O04Z O61Z
O92.50	14	O04Z O61Z
O92.51	14	O04Z O61Z
O92.60	14	O04Z O61Z
O92.61	14	O04Z O61Z
O92.70	14	O04Z O61Z
O92.71	14	O04Z O61Z
O94	Prä	961Z
O95	Prä	961Z
O96.0	Prä	961Z
O96.1	Prä	961Z
O96.9	Prä	961Z
O97.0	Prä	961Z
O97.1	Prä	961Z
O97.9	Prä	961Z
O98.0	14	O04Z O61Z O65A
		O65B O65C O65D
O98.1	14	O04Z O61Z O65A
		O65B O65C O65D
O98.2	14	O04Z O61Z O65A
		O65B O65C O65D
O98.3	14	O04Z O61Z O65A
		O65B O65C O65D
O98.4	14	O04Z O61Z O65A
		O65B O65C O65D
O98.5	14	O04Z O61Z O65A
		O65B O65C O65D
O98.6	14	O04Z O61Z O65A
		O65B O65C O65D
O98.7	14	O04Z O61Z O65A
		O65B O65C O65D
O98.8	14	O04Z O61Z O65A
		O65B O65C O65D
O98.9	14	O04Z O61Z O65A
		O65B O65C O65D
O99.0	14	O04Z O61Z O65A
		O65B O65C O65D
O99.1	14	O04Z O61Z O65A
		O65B O65C O65D
O99.2	14	O04Z O61Z O65A
		O65B O65C O65D
O99.3	14	O04Z O61Z O65A
		O65B O65C O65D
O99.4	14	O04Z O61Z O65A
		O65B O65C O65D
O99.5	14	O04Z O61Z O65A
		O65B O65C O65D
O99.6	14	O04Z O61Z O65A
		O65B O65C O65D
O99.7	14	O04Z O61Z O65A
		O65B O65C O65D
O99.8	14	O04Z O61Z O65A
		O65B O65C O65D
P00.0	Prä	963Z
P00.1	Prä	963Z
P00.2	Prä	963Z
P00.3	Prä	963Z
P00.4	Prä	963Z
P00.5	Prä	963Z
P00.6	Prä	963Z
P00.7	Prä	963Z
P00.8	Prä	963Z
P00.9	Prä	963Z
P01.0	Prä	963Z
P01.1	Prä	963Z
P01.2	Prä	963Z
P01.3	Prä	963Z
P01.4	Prä	963Z
P01.5	Prä	963Z
	15	P65B P66B P66C
		P67A P67B P67C
P01.6	Prä	963Z
	15	P65B P66B P66C
		P67A P67B P67C
P01.7	Prä	963Z
P01.8	Prä	963Z
P01.9	Prä	963Z
P02.0	Prä	963Z
P02.1	15	MSPNG SPNG
	Prä	963Z
P02.2	Prä	963Z
P02.3	Prä	963Z
P02.4	Prä	963Z
	15	P65B P66B P66C
		P67A P67B P67C
P02.5	Prä	963Z
P02.6	Prä	963Z
P02.7	Prä	963Z
	15	P65B P66B P66C
		P67A P67B P67C
P02.8	Prä	963Z
P02.9	Prä	963Z
P03.0	Prä	963Z
P03.1	15	MSPNG SPNG
	Prä	963Z
P03.2	Prä	963Z
P03.3	Prä	963Z
P03.4	Prä	963Z
P03.5	Prä	963Z
P03.6	Prä	963Z
P03.8	Prä	963Z
P03.9	Prä	963Z
P04.0	15	MSPNG SPNG
	Prä	963Z
P04.1	Prä	963Z
	15	P65B P66B P66C
		P67A P67B P67C
P04.2	Prä	963Z
P04.3	Prä	963Z
P04.4	Prä	963Z
	15	P65B P66B P66C
		P67A P67B P67C
P04.5	Prä	963Z
P04.6	Prä	963Z
P04.8	Prä	963Z

DIAG

ICD	MDC	DRG
P04.9	Prä	963Z
P05.0	Prä	963Z
P05.1	Prä	963Z
P05.2	Prä	963Z
P05.9	Prä	963Z
P07.00	Prä	963Z
P07.01	Prä	963Z
P07.02	Prä	963Z
P07.2	15	MSPNG SPNG
	Prä	963Z
P07.3	Prä	963Z
P07.10	Prä	963Z
P07.11	Prä	963Z
P07.12	Prä	963Z
P08.0	Prä	963Z
P08.1	Prä	963Z
P08.2	Prä	963Z
P10.0	15	MSPNG SPNG
	Prä	963Z
P10.1	15	MSPNG SPNG
	Prä	963Z
P10.2	15	MSPNG SPNG
	Prä	963Z
P10.3	15	MSPNG SPNG
	Prä	963Z
P10.4	15	MSPNG SPNG
	Prä	963Z
P10.8	15	MSPNG SPNG
	Prä	963Z
P10.9	15	MSPNG SPNG
	Prä	963Z
P11.0	Prä	963Z
P11.1	15	MSPNG SPNG
	Prä	963Z
P11.2	15	MSPNG SPNG
	Prä	963Z
P11.3	01	B03A B03B B03C
		B71A B71B B71C
P11.4	01	B03A B03B B03C
		B71A B71B B71C
P11.9	Prä	963Z
P11.50	Prä	B61A B61B B61C
		B61D B61E
	01	B60A B60B B66A
		B68A B70A B81A
		B85A B86B
	04	E36A E36B E36C
		E63A E70A E70B
		E71A E77A E86B
	05	F67A F73A F75C
	06	G67A G67B G86C
	07	H64A
	08	I02A I02B I02C
		I06A I06B I06C
		I10B I60A I61A
		I65A I68A I68B
		I71A I77A
	09	J11A
	10	K60B K62A K64A
	11	L18A L38Z L42A
		L60A L60B L62A
		L63A L63C L64A
		L68A
	16	Q60B
	17	R62A
	18B	T60B T60D
	19	U64A
	21A	W01A W01B W01C
		W01D
	23	Z86A

ICD	MDC	DRG
P11.51	Prä	A94A A94B A94C
		A97D B61A B61B
		B61C B61D B61E
	01	B60A B60B B66A
		B68A B70A B71A
		B71B B81A B85A
		B86B
	04	E36A E36B E36C
		E63A E70A E70B
		E71A E77A E86B
	05	F67A F73A F75C
	06	G67A G67B G86C
	07	H64A
	08	I02A I02B I02C
		I06A I06B I06C
		I10B I60A I61A
		I65A I68A I68B
		I71A I77A
	09	J11A J61A J61B
	10	K60B K62A K64A
	11	L18A L38Z L42A
		L60A L60B L62A
		L63A L63C L64A
		L68A
	16	Q60B
	17	R62A
	18B	T60B T60D
	19	U64A
	21A	W01A W01B W01C
		W01D
	23	Z86A
P11.59	01	B60A B60B
P12.0	Prä	963Z
P12.1	Prä	963Z
P12.2	Prä	963Z
P12.3	Prä	963Z
P12.4	Prä	963Z
P12.8	Prä	963Z
P12.9	Prä	963Z
P13.0	01	B79Z B86B
P13.1	Prä	963Z
P13.2	Prä	963Z
P13.3	Prä	963Z
P13.4	Prä	963Z
P13.8	Prä	963Z
P13.9	Prä	963Z
P14.0	01	B03A B03B B03C
		B71A B71B B71C
P14.1	01	B03A B03B B03C
		B71A B71B B71C
P14.2	01	B03A B03B B03C
		B71A B71B B71C
P14.3	01	B03A B03B B03C
		B71A B71B B71C
P14.8	01	B03A B03B B03C
		B71A B71B B71C
P14.9	01	B03A B03B B03C
		B81A B81B B81C
P15.0	Prä	963Z
P15.1	Prä	963Z
P15.2	Prä	963Z
P15.3	Prä	963Z
P15.4	Prä	963Z
P15.5	Prä	963Z
P15.6	15	MSPNG SPNG
	Prä	963Z
P15.8	Prä	963Z
P15.9	Prä	963Z
P20.0	Prä	963Z
P20.1	Prä	963Z

ICD	MDC	DRG
P20.9	Prä	963Z
P21.0	01	B03A B03B B03C
		B81A B81B B81C
	15	MSPNG SPNG
P21.1	01	B03A B03B B03C
		B81A B81B B81C
P21.9	01	B81A B81B B81C
P22.0	15	MSPNG SPNG
	Prä	963Z
P22.1	Prä	963Z
	15	P67A P67B P67C
P22.8	04	E65A E65B E65C
		E65D
	15	P67A P67B P67C
P22.9	04	E65A E65B E65C
		E65D
P23.0	15	MSPNG SPNG
	Prä	963Z
P23.1	15	MSPNG SPNG
	Prä	963Z
P23.2	15	MSPNG SPNG
	Prä	963Z
P23.3	15	MSPNG SPNG
	Prä	963Z
P23.4	15	MSPNG SPNG
	Prä	963Z
P23.5	15	MSPNG SPNG
	Prä	963Z
P23.6	15	MSPNG SPNG
	Prä	963Z
P23.8	15	MSPNG SPNG
	Prä	963Z
P23.9	15	MSPNG SPNG
	Prä	963Z
P24.0	04	E65A E65B E65C
		E65D
	15	MSPNG SPNG
P24.1	15	MSPNG SPNG
	Prä	963Z
P24.2	15	MSPNG SPNG
	Prä	963Z
P24.3	15	MSPNG SPNG
	Prä	963Z
P24.8	15	MSPNG SPNG
	Prä	963Z
P24.9	15	MSPNG SPNG
	Prä	963Z
P25.0	15	MSPNG SPNG
	Prä	963Z
P25.1	15	MSPNG SPNG
	Prä	963Z
P25.2	15	MSPNG SPNG
	Prä	963Z
P25.3	15	MSPNG SPNG
	Prä	963Z
P25.8	15	MSPNG SPNG
	Prä	963Z
P26.0	15	MSPNG SPNG
	Prä	963Z
P26.1	15	MSPNG SPNG
	Prä	963Z
P26.8	15	MSPNG SPNG
	Prä	963Z
P26.9	15	MSPNG SPNG
	Prä	963Z
P27.0	04	E65A E65B E65C
		E65D
	15	MSPNG SPNG
P27.1	04	E65A E65B E65C
		E65D

ICD	MDC	DRG
	15	MSPNG SPNG
P27.8	04	E65A E65B E65C
		E65D
	15	MSPNG SPNG
P27.9	04	E65A E65B E65C
		E65D
	15	MSPNG SPNG
P28.0	Prä	963Z
P28.1	Prä	963Z
P28.2	04	E65A E65B E65C
		E65D
P28.3	04	E65A E65B E65C
		E65D
	15	P65B P66B P66C
		P67A P67B P67C
P28.4	04	E65A E65B E65C
		E65D
	15	P65B P66B P66C
		P67A P67B P67C
P28.5	04	E65A E65B E65C
		E65D
	15	MSPNG SPNG
P28.8	04	E65A E65B E65C
		E65D
	15	P67A P67B P67C
P28.9	Prä	963Z
P29.0	15	MSPNG SPNG
	Prä	963Z
P29.1	Prä	963Z
	15	P65B P66B P66C
		P67A P67B P67C
P29.2	Prä	963Z
P29.3	Prä	963Z
P29.4	Prä	963Z
P29.8	Prä	963Z
P29.9	Prä	963Z
P35.0	15	MSPNG SPNG
	18B	T63A T63B
P35.1	15	MSPNG SPNG
	18B	T63A
P35.2		KP KPP
	05	F62A
	15	MSPNG SPNG
	17	R50A R60A R60B
		R60C R60D R62A
		R62B R63A R63B
		R63C R63D
	18B	T01C T60A T60B
		T60C T60D T60E
		T60F T60G T61A
		T86A
	Prä	A93A A97A A97B
		A97C A97D
P35.3	07	H63A H63B H63C
		H63D
	15	MSPNG SPNG
P35.4	15	MSPNG SPNG
	18B	T63A T63B
P35.8	15	MSPNG SPNG
	18B	T64A T64B T64C
P35.9	15	MSPNG SPNG
	18B	T64A T64B T64C
P36.0	15	MSPNG SPNG
	Prä	963Z
P36.1	15	MSPNG SPNG
	Prä	963Z
P36.2	15	MSPNG SPNG
	Prä	963Z
P36.3	15	MSPNG SPNG
	Prä	963Z
P36.4	15	MSPNG SPNG
	Prä	963Z
P36.5	15	MSPNG SPNG
	Prä	963Z
P36.8	15	MSPNG SPNG
	Prä	963Z
P36.9	15	MSPNG SPNG
	Prä	963Z
P37.0	15	MSPNG SPNG
	18B	T64A T64B T64C
P37.1	15	MSPNG SPNG
	18B	T64A T64B T64C
P37.2		KP KPP
	05	F62A
	15	MSPNG SPNG
	17	R50A R60A R60B
		R60C R60D R62A
		R62B R63A R63B
		R63C R63D
	18B	T01C T60A T60B
		T60C T60D T60E
		T60F T60G T61A
		T86A
	Prä	A93A A97A A97B
		A97C A97D
P37.3	15	MSPNG SPNG
	18B	T64A T64B T64C
P37.4	15	MSPNG SPNG
	18B	T64A T64B T64C
P37.5	Prä	963Z
P37.8	15	MSPNG SPNG
	18B	T64A T64B T64C
P37.9	18B	T64A T64B T64C
P38	Prä	963Z
	15	P65B P66B P66C
		P67A P67B P67C
P39.0	Prä	963Z
	15	P65B P66B P66C
		P67A P67B P67C
P39.1	Prä	963Z
P39.2	Prä	963Z
P39.3	Prä	963Z
	15	P65B P66B P66C
		P67A P67B P67C
P39.4	Prä	963Z
	15	P65B P66B P66C
		P67A P67B P67C
P39.8	Prä	963Z
P39.9	Prä	963Z
	15	P67A P67B P67C
P50.0	Prä	963Z
P50.1	Prä	963Z
P50.2	Prä	963Z
P50.3	Prä	963Z
P50.4	Prä	963Z
P50.5	Prä	963Z
P50.8	Prä	963Z
P50.9	Prä	963Z
P51.0	Prä	963Z
P51.8	Prä	963Z
P51.9	Prä	963Z
P52.0	15	MSPNG SPNG
	Prä	963Z
P52.1	15	MSPNG SPNG
	Prä	963Z
P52.2	15	MSPNG SPNG
	Prä	963Z
P52.3	15	MSPNG SPNG
	Prä	963Z
P52.4	Prä	963Z
	15	P65B P66B P66C
		P67A P67B P67C
P52.5	15	MSPNG SPNG
	Prä	963Z
P52.6	Prä	963Z
P52.8	Prä	963Z
P52.9	Prä	963Z
P53	06	G67C
	07	H63A
	15	MSPNG SPNG
	16	Q60A Q60B Q60C
P54.0	Prä	963Z
P54.1	Prä	963Z
P54.2	Prä	963Z
P54.3	Prä	963Z
P54.4	15	MSPNG SPNG
	Prä	963Z
P54.5	Prä	963Z
P54.6	Prä	963Z
P54.8	Prä	963Z
P54.9	Prä	963Z
P55.0	15	P65B P66B P66C
		P67A P67B P67C
	16	Q61A Q61B Q61C
P55.1	15	P65B P66B P66C
		P67A P67B P67C
	16	Q61A Q61B Q61C
P55.8	15	P65B P66B P66C
		P67A P67B P67C
	16	Q61A Q61B Q61C
P55.9	16	Q61A Q61B Q61C
P56.0	15	MSPNG SPNG
	Prä	963Z
P56.9	15	MSPNG SPNG
	Prä	963Z
P57.0	15	MSPNG SPNG
	Prä	963Z
P57.8	15	MSPNG SPNG
	Prä	963Z
P57.9	15	MSPNG SPNG
	Prä	963Z
P58.0	Prä	963Z
P58.1	Prä	963Z
P58.2	Prä	963Z
P58.3	Prä	963Z
P58.4	Prä	963Z
P58.5	Prä	963Z
P58.8	Prä	963Z
P58.9	Prä	963Z
P59.0	Prä	963Z
	15	P65B P66B P66C
		P67A P67B P67C
P59.1	07	H63A H63B H63C
		H63D
	15	MSPNG SPNG
P59.2	07	H63A H63B H63C
		H63D
	15	MSPNG SPNG
P59.3	07	H63A H63B H63C
		H63D
P59.8	Prä	963Z
	15	P65B P66B P66C
		P67A P67B P67C
P59.9	Prä	963Z
P60	06	G67C
	07	H63A
	15	MSPNG SPNG
	16	Q60A Q60B Q60C
P61.0	06	G67C
	07	H63A

DIAG

ICD	MDC	DRG
	15	MSPNG SPNG
	16	Q60A Q60B Q60C
P61.1	Prä	963Z
P61.2	16	Q61A Q61B Q61C
P61.3	16	Q61A Q61B Q61C
P61.4	16	Q61A Q61B Q61C
P61.5	16	Q60A Q60B Q60C
P61.6	16	Q60A Q60B Q60C
P61.8	Prä	963Z
P61.9	Prä	963Z
P70.0	Prä	963Z
P70.1	Prä	963Z
P70.2	10	K60A K60B K60C
		K60D K60E
	15	MSPNG SPNG
P70.3	10	K63A K63B
P70.4	10	K63A K63B
P70.8	10	K62A K62B
P70.9	10	K62A K62B
P71.0	10	K62A K62B
P71.1	10	K62A K62B
	15	P65B P66B P66C
		P67A P67B P67C
P71.2	10	K62A K62B
P71.3	10	K62A K62B
P71.4	10	K62A K62B
P71.8	10	K62A K62B
P71.9	10	K62A K62B
P72.0	10	K62A K62B
P72.1	10	K09A K09B K64A
		K64B K64C
	15	MSPNG SPNG
P72.2	10	K62A K62B
P72.8	10	K62A K62B
P72.9	10	K62A K62B
P74.0	10	K62A K62B
	15	P65B P66B P66C
		P67A P67B P67C
P74.1	10	K62A K62B
P74.2	10	K62A K62B
P74.3	10	K62A K62B
P74.4	10	K62A K62B
P74.5	10	K62A K62B
P74.8	10	K62A K62B
P74.9	10	K62A K62B
P75	Prä	961Z 963Z
P76.0	Prä	963Z
	15	P65B P66B P66C
		P67A P67B P67C
P76.1	06	G71A G71B
P76.2	06	G46A G46B G72A
		G72B
P76.8	06	G71A G71B
P76.9	06	G71A G71B
P77	06	G71A G71B
	15	MSPNG SPNG
P78.0	06	G70A G70B G70C
	15	MSPNG SPNG
P78.1	15	MSPNG SPNG
	Prä	963Z
P78.2	Prä	963Z
P78.3	06	G71A G71B
	15	P65B P66B P66C
		P67A P67B P67C
P78.8	06	G71A G71B
P78.9	06	G71A G71B
P80.0	Prä	963Z
P80.8	Prä	963Z
P80.9	Prä	963Z
P81.0	Prä	963Z
P81.8	Prä	963Z
P81.9	Prä	963Z
P83.0	15	MSPNG SPNG
	Prä	963Z
P83.1	09	J67Z
P83.2	15	MSPNG SPNG
	Prä	963Z
P83.3	23	Z65A Z65B
P83.4	09	J67Z
P83.5	12	M64Z
P83.6	09	J67Z
P83.8	09	J67Z
P83.9	09	J67Z
P90	01	B03A B03B B03C
		B76A B76B B76C
		B76D B76E B76F
		B76G B76H
	15	MSPNG SPNG
P91.0	01	B03A B03B B03C
		B66A B66B B66C
P91.1	01	B03A B03B B03C
		B66A B66B B66C
P91.2	01	B03A B03B B03C
		B66A B66B B66C
	15	MSPNG SPNG
P91.3	01	B03A B03B B03C
		B81A B81B B81C
P91.4	01	B03A B03B B03C
		B66A B66B B66C
P91.5	01	B03A B03B B03C
		B66A B66B B66C
	15	MSPNG SPNG
P91.6	01	B03A B03B B03C
		B66A B66B B66C
	15	MSPNG SPNG
P91.7	01	B85A B85B
	15	MSPNG SPNG
	Prä	A11C
P91.9	01	B81A B81B B81C
P91.80	01	B03A B03B B03C
		B60A B60B B66A
		B66B B66C B68A
		B70A B71A B71B
		B81A B85A B86B
	04	E36A E36B E36C
		E63A E70A E70B
		E71A E77A E86B
	05	F67A F73A F75C
	06	G67A G67B G86C
	07	H64A
	08	I02A I02B I02C
		I06A I06B I06C
		I10B I60A I61A
		I65A I68A I68B
		I71A I77A
	09	J11A J61A J61B
	10	K60B K62A K64A
	11	L18A L38Z L42A
		L60A L60B L62A
		L63A L63C L64A
		L68A
	15	MSPNG SPNG
	16	Q60B
	17	R62A
	18B	T60B T60D
	19	U64A
	21A	W01A W01B W01C
		W01D
	23	Z86A
	Prä	A43A A43B A94A
		A94B A94C A97D
		B61A B61B B61C
		B61D B61E
P91.88	01	B03A B03B B03C
		B66A B66B B66C
P92.0	10	K62A K62B
P92.1	10	K62A K62B
P92.2	10	K62A K62B
P92.3	10	K62A K62B
P92.4	10	K62A K62B
P92.5	10	K62A K62B
P92.8	10	K62A K62B
P92.9	10	K62A K62B
P93	Prä	963Z
P94.0	01	B03A B03B B03C
		B85A B85B
	15	MSPNG SPNG
P94.1	Prä	963Z
P94.2	01	B81A B81B B81C
	15	MSPNG SPNG
P94.8	Prä	963Z
P94.9	Prä	963Z
P95	Prä	961Z 963Z
P96.0	15	MSPNG SPNG
	Prä	963Z
P96.1	15	MSPNG P66A P67A
		SPNG
	Prä	963Z
P96.2	15	MSPNG P66A P67A
		SPNG
	Prä	963Z
P96.3	Prä	963Z
P96.4	Prä	961Z 963Z
P96.5	Prä	963Z
P96.8	Prä	963Z
P96.9	Prä	963Z
Q00.0	01	B03A B03B B03C
		B76F B81A B81B
		B81C
	06	G16A G16B G18A
		G38A G38B G38C
	15	MSPNG SPNG
	Prä	A11C
Q00.1	01	B03A B03B B03C
		B76F B81A B81B
		B81C
	06	G16A G16B G18A
		G38A G38B G38C
	15	MSPNG SPNG
	Prä	A11C
Q00.2	01	B03A B03B B03C
		B76F B81A B81B
		B81C
	06	G16A G16B G18A
		G38A G38B G38C
	15	MSPNG SPNG
	Prä	A11C
Q01.0	01	B03A B03B B03C
		B76F B81A B81B
		B81C
	06	G16A G16B G18A
		G38A G38B G38C
	15	MSPNG SPNG
	Prä	A11C
Q01.1	01	B03A B03B B03C
		B76F B81A B81B
		B81C
	06	G16A G16B G18A
		G38A G38B G38C
	15	MSPNG SPNG

ICD	MDC	DRG
	Prä	A11C
Q01.2	01	B03A B03B B03C B76F B81A B81B B81C
	06	G16A G16B G18A G38A G38B G38C
	15	MSPNG SPNG
	Prä	A11C
Q01.8	01	B03A B03B B03C B76F B81A B81B B81C
	06	G16A G16B G18A G38A G38B G38C
	15	MSPNG SPNG
	Prä	A11C
Q01.9	01	B81A B81B B81C
	06	G16A G16B G18A G38A G38B G38C
	15	MSPNG SPNG
	Prä	A11C
Q02	Prä	A11C
	01	B03A B03B B03C B76F B81A B81B B81C
	06	G16A G16B G18A G38A G38B G38C
Q03.0	01	B03A B03B B03C B76F B81A B81B B81C
	06	G16A G16B G18A G38A G38B G38C
	15	MSPNG SPNG
	Prä	A11C
Q03.1	01	B03A B03B B03C B76F B81A B81B
	06	G16A G16B G18A G38A G38B G38C
	15	MSPNG SPNG
	Prä	A11C
Q03.8	01	B03A B03B B03C B76F B81A B81B B81C
	06	G16A G16B G18A G38A G38B G38C
	15	MSPNG SPNG
	Prä	A11C
Q03.9	01	B81A B81B B81C
	06	G16A G16B G18A G38A G38B G38C
	15	MSPNG SPNG
	Prä	A11C
Q04.0	01	B03A B03B B03C B76F B81A B81B
	06	G16A G16B G18A G38A G38B G38C
	15	MSPNG SPNG
	Prä	A11C
Q04.1	01	B03A B03B B03C B76F B81A B81B B81C
	06	G16A G16B G18A G38A G38B G38C
	15	MSPNG SPNG
	Prä	A11C
Q04.2	01	B03A B03B B03C B76F B81A B81B B81C
	06	G16A G16B G18A G38A G38B G38C
	15	MSPNG SPNG
	Prä	A11C
Q04.3	01	B03A B03B B03C B76F B81A B81B
	06	G16A G16B G18A G38A G38B G38C
	15	MSPNG SPNG
	Prä	A11C
Q04.4	01	B03A B03B B03C B76F B81A B81B B81C
	06	G16A G16B G18A G38A G38B G38C
	15	MSPNG SPNG
	Prä	A11C
Q04.5	01	B03A B03B B03C B76F B81A B81B B81C
	06	G16A G16B G18A G38A G38B G38C
	15	MSPNG SPNG
	Prä	A11C
Q04.6	01	B03A B03B B03C B76F B81A B81B
	15	MSPNG SPNG
	Prä	A11C
Q04.8	01	B03A B03B B03C B76F B81A B81B
	15	MSPNG SPNG
	Prä	A11C
Q04.9	Prä	A11C
	01	B81A B81B B81C
Q05.0	01	B03A B03B B03C B76F B81A B81B B81C
	06	G16A G16B G18A G38A G38B G38C
	15	MSPNG SPNG
	Prä	A11C
Q05.1	01	B03A B03B B03C B76F B81A B81B B81C
	06	G16A G16B G18A G38A G38B G38C
	15	MSPNG SPNG
	Prä	A11C
Q05.2	01	B03A B03B B03C B76F B81A B81B B81C
	06	G16A G16B G18A G38A G38B G38C
	15	MSPNG SPNG
	Prä	A11C
Q05.3	01	B03A B03B B03C B76F B81A B81B B81C
	06	G16A G16B G18A G38A G38B G38C
	15	MSPNG SPNG
	Prä	A11C
Q05.4	01	B03A B03B B03C B76F B81A B81B B81C
	06	G16A G16B G18A G38A G38B G38C
	15	MSPNG SPNG
	Prä	A11C
Q05.5	01	B03A B03B B03C B76F B81A B81B B81C
	15	MSPNG SPNG
	Prä	A11C
Q05.6	01	B03A B03B B03C B76F B81A B81B B81C
	15	MSPNG SPNG
	Prä	A11C
Q05.7	01	B03A B03B B03C B76F B81A B81B B81C
	15	MSPNG SPNG
	Prä	A11C
Q05.8	01	B03A B03B B03C B76F B81A B81B B81C
	15	MSPNG SPNG
	Prä	A11C
Q05.9	01	B81A B81B B81C
	15	MSPNG SPNG
	Prä	A11C
Q06.0	01	B03A B03B B03C B76F B81A B81B B81C
	15	MSPNG SPNG
	Prä	A11C
Q06.1	01	B03A B03B B03C B76F B81A B81B B81C
	15	MSPNG SPNG
	Prä	A11C
Q06.2	01	B03A B03B B03C B76F B81A B81B B81C
	15	MSPNG SPNG
	Prä	A11C
Q06.3	01	B03A B03B B03C B76F B81A B81B B81C
	15	MSPNG SPNG
	Prä	A11C
Q06.4	01	B03A B03B B03C B76F B81A B81B B81C
	15	MSPNG SPNG
	Prä	A11C
Q06.8	01	B03A B03B B03C B76F B81A B81B B81C
	15	MSPNG SPNG
	Prä	A11C
Q06.9	Prä	A11C
	01	B81A B81B B81C
Q07.0	01	B03A B03B B03C B76F B81A B81B B81C
	06	G16A G16B G18A G38A G38B G38C
	15	MSPNG SPNG
	Prä	A11C
Q07.8	Prä	A11C
	01	B03A B03B B03C B76F B81A B81B B81C
Q07.9	Prä	A11C
	01	B81A B81B B81C
Q10.0	02	C63A C63B C63C
	15	P65B P66B P66C P67A P67B P67C
Q10.1	02	C63A C63B C63C
Q10.2	02	C63A C63B C63C
Q10.3	02	C63A C63B C63C

DIAG

ICD	MDC	DRG
Q10.4	02	C63A C63B C63C
Q10.5	02	C63A C63B C63C
Q10.6	02	C63A C63B C63C
Q10.7	02	C63A C63B C63C
	15	P65B P66B P66C
		P67A P67B P67C
Q11.0	02	C63A C63B C63C
	15	P65B P66B P66C
		P67A P67B P67C
Q11.1	02	C63A C63B C63C
	15	P65B P66B P66C
		P67A P67B P67C
Q11.2	02	C63A C63B C63C
	15	P65B P66B P66C
		P67A P67B P67C
Q11.3	02	C63A C63B C63C
	15	P65B P66B P66C
		P67A P67B P67C
Q12.0	02	C08A C63A C63B
		C63C
	15	P65B P66B P66C
		P67A P67B P67C
Q12.1	02	C08A C63A C63B
		C63C
	15	P65B P66B P66C
		P67A P67B P67C
Q12.2	02	C08A C63A C63B
		C63C
	15	P65B P66B P66C
		P67A P67B P67C
Q12.3	02	C08A C63A C63B
		C63C
	15	P65B P66B P66C
		P67A P67B P67C
Q12.4	02	C08A C63A C63B
		C63C
	15	P65B P66B P66C
		P67A P67B P67C
Q12.8	02	C08A C63A C63B
		C63C
	15	P65B P66B P66C
		P67A P67B P67C
Q12.9	02	C63A C63B C63C
	15	P65B P66B P66C
		P67A P67B P67C
Q13.0	02	C63A C63B C63C
	15	P65B P66B P66C
		P67A P67B P67C
Q13.1	02	C63A C63B C63C
	15	P65B P66B P66C
		P67A P67B P67C
Q13.2	02	C63A C63B C63C
	15	P65B P66B P66C
		P67A P67B P67C
Q13.3	02	C63A C63B C63C
	15	P65B P66B P66C
		P67A P67B P67C
Q13.4	02	C63A C63B C63C
	15	P65B P66B P66C
		P67A P67B P67C
Q13.5	02	C63A C63B C63C
	15	P65B P66B P66C
		P67A P67B P67C
Q13.8	02	C63A C63B C63C
	15	P65B P66B P66C
		P67A P67B P67C
Q13.9	02	C63A C63B C63C
Q14.0	02	C63A C63B C63C
	15	P65B P66B P66C
		P67A P67B P67C

ICD	MDC	DRG
Q14.1	02	C63A C63B C63C
	15	P65B P66B P66C
		P67A P67B P67C
Q14.2	02	C63A C63B C63C
	15	P65B P66B P66C
		P67A P67B P67C
Q14.3	02	C63A C63B C63C
	15	P65B P66B P66C
		P67A P67B P67C
Q14.8	02	C63A C63B C63C
	15	P65B P66B P66C
		P67A P67B P67C
Q14.9	02	C63A C63B C63C
Q15.0	02	C64Z
	15	MSPNG SPNG
Q15.8	02	C63A C63B C63C
Q15.9	02	C63A C63B C63C
Q16.0	03	D66A D66B
	15	P65B P66B P66C
		P67A P67B P67C
Q16.1	03	D66A D66B
	15	P65B P66B P66C
		P67A P67B P67C
Q16.2	03	D66A D66B
	15	P65B P66B P66C
		P67A P67B P67C
Q16.3	03	D66A D66B
	15	P65B P66B P66C
		P67A P67B P67C
Q16.4	03	D66A D66B
	15	P65B P66B P66C
		P67A P67B P67C
Q16.5	03	D66A D66B
	15	P65B P66B P66C
		P67A P67B P67C
Q16.9	03	D66A D66B
	15	P65B P66B P66C
		P67A P67B P67C
Q17.0	03	D66A D66B
	15	P65B P66B P66C
		P67A P67B P67C
Q17.1	03	D66A D66B
Q17.2	03	D66A D66B
Q17.3	03	D66A D66B
Q17.4	03	D66A D66B
Q17.5	03	D66A D66B
Q17.8	03	D66A D66B
Q17.9	03	D66A D66B
Q18.0	03	D66A D66B
	15	P65B P66B P66C
		P67A P67B P67C
Q18.1	03	D66A D66B
Q18.2	03	D66A D66B
Q18.3	09	J67Z
Q18.4	03	D40Z D67A D67B
Q18.5	03	D40Z D67A D67B
Q18.6	03	D40Z D67A D67B
Q18.7	03	D40Z D67A D67B
Q18.8	03	D66A D66B
Q18.9	09	J67Z
Q20.0	05	F03C F03D F30Z
		F49A F49C F68Z
	06	G16A G16B G18A
		G38A G38B G38C
	15	MSPNG SPNG
	Prä	A11C
Q20.1	05	F03C F03D F30Z
		F49A F49C F68Z
	06	G16A G16B G18A
		G38A G38B G38C

ICD	MDC	DRG
	15	MSPNG SPNG
	Prä	A11C
Q20.2	05	F03C F03D F30Z
		F49A F49C F68Z
	06	G16A G16B G18A
		G38A G38B G38C
	15	MSPNG SPNG
	Prä	A11C
Q20.3	05	F03C F03D F30Z
		F49A F49C F68Z
	06	G16A G16B G18A
		G38A G38B G38C
	15	MSPNG SPNG
	Prä	A11C
Q20.4	05	F03C F03D F30Z
		F49A F49C F68Z
	06	G16A G16B G18A
		G38A G38B G38C
	15	MSPNG SPNG
	Prä	A11C
Q20.5	05	F03C F03D F30Z
		F49A F49C F68Z
	06	G16A G16B G18A
		G38A G38B G38C
	15	MSPNG SPNG
	Prä	A11C
Q20.6	Prä	A11C
	05	F03C F03D F30Z
		F49A F49C F68Z
	06	G16A G16B G18A
		G38A G38B G38C
Q20.8	Prä	A11C
	05	F03C F03D F30Z
		F49A F49C F68Z
Q20.9	Prä	A11C
	05	F03C F03D F49A
		F49C F68Z
Q21.0	Prä	A11C
	05	F03C F03D F49A
		F49C F68Z
Q21.1	05	F03C F03D F49A
		F49C F68Z
	15	MSPNG SPNG
	Prä	A11C
Q21.2	05	F03C F03D F49A
		F49C F68Z
	15	MSPNG SPNG
	Prä	A11C
Q21.3	05	F03C F03D F49A
		F49C F68Z
	06	G16A G16B G18A
		G38A G38B G38C
	15	MSPNG SPNG
	Prä	A11C
Q21.4	05	F03C F03D F49A
		F49C F68Z
	15	MSPNG SPNG
	Prä	A11C
Q21.9	Prä	A11C
	05	F03C F03D F49A
		F49C F68Z
Q21.80	05	F03C F03D F49A
		F49C F68Z
	15	MSPNG SPNG
	Prä	A11C
Q21.88	Prä	A11C
	05	F03C F03D F49A
		F49C F68Z
Q22.0	05	F03C F03D F30Z
		F49A F49C F68Z

ICD	MDC	DRG
	06	G16A G16B G18A G38A G38B G38C
	15	MSPNG SPNG
	Prä	A11C
Q22.1	05	F03C F03D F49A F49C F68Z
	06	G16A G16B G18A G38A G38B G38C
	15	MSPNG SPNG
	Prä	A11C
Q22.2	Prä	A11C
	05	F03C F03D F49A F49C F68Z
	06	G16A G16B G18A G38A G38B G38C
Q22.3	Prä	A11C
	05	F03C F03D F49A F49C F68Z
Q22.4	05	F03C F03D F49A F49C F68Z
	06	G16A G16B G18A G38A G38B G38C
	15	MSPNG SPNG
	Prä	A11C
Q22.5	05	F03C F03D F49A F49C F68Z
	06	G16A G16B G18A G38A G38B G38C
	15	MSPNG SPNG
	Prä	A11C
Q22.6	05	F03C F03D F30Z F49A F49C F68Z
	06	G16A G16B G18A G38A G38B G38C
	15	MSPNG SPNG
	Prä	A11C
Q22.8	05	F03C F03D F49A F49C F68Z
	15	MSPNG SPNG
	Prä	A11C
Q22.9	05	F03C F03D F49A F49C F68Z
	15	MSPNG SPNG
	Prä	A11C
Q23.0	05	F03C F03D F49A F49C F68Z
	06	G16A G16B G18A G38A G38B G38C
	15	MSPNG SPNG
	Prä	A11C
Q23.1	05	F03C F03D F49A F49C F68Z
	06	G16A G16B G18A G38A G38B G38C
	15	MSPNG SPNG
	Prä	A11C
Q23.2	05	F03C F03D F49A F49C F68Z
	06	G16A G16B G18A G38A G38B G38C
	15	MSPNG SPNG
	Prä	A11C
Q23.3	05	F03C F03D F49A F49C F68Z
	06	G16A G16B G18A G38A G38B G38C
	15	MSPNG SPNG
	Prä	A11C
Q23.4	05	F03C F03D F30Z F49A F49C F68Z
	06	G16A G16B G18A G38A G38B G38C
	15	MSPNG SPNG
	Prä	A11C
Q23.8	05	F03C F03D F49A F49C F68Z
	15	MSPNG SPNG
	Prä	A11C
Q23.9	05	F03C F03D F49A F49C F68Z
	15	MSPNG SPNG
	Prä	A11C
Q24.0	Prä	A11C
	05	F03C F03D F49A F49C F68Z
Q24.1	Prä	A11C
	05	F03C F03D F49A F49C F68Z
Q24.2	05	F03C F03D F49A F49C F68Z
	15	MSPNG SPNG
	Prä	A11C
Q24.3	05	F03C F03D F49A F49C F68Z
	06	G16A G16B G18A G38A G38B G38C
	15	MSPNG SPNG
	Prä	A11C
Q24.4	05	F03C F03D F49A F49C F68Z
	06	G16A G16B G18A G38A G38B G38C
	15	MSPNG SPNG
	Prä	A11C
Q24.5	05	F03C F03D F49A F49C F68Z
	15	MSPNG SPNG
	Prä	A11C
Q24.6	05	F03C F03D F49A F49C F68Z
	15	MSPNG SPNG
	Prä	A11C
Q24.8	05	F03C F03D F49A F49C F68Z
	15	MSPNG SPNG
	Prä	A11C
Q24.9	Prä	A11C
	05	F03C F03D F49A F49C F68Z
Q25.0	Prä	A11C
	05	F03C F03D F49A F49C F68Z
Q25.1	05	F03C F03D F49A F49C F68Z
	15	MSPNG SPNG
	Prä	A11C
Q25.2	05	F03C F03D F30Z F49A F49C F68Z
	06	G16A G16B G18A G38A G38B G38C
	15	MSPNG SPNG
	Prä	A11C
Q25.3	05	F03C F03D F49A F49C F68Z
	06	G16A G16B G18A G38A G38B G38C
	15	MSPNG SPNG
	Prä	A11C
Q25.4	Prä	A11C
	05	F03C F03D F49A F49C F68Z
Q25.5	05	F03C F03D F30Z F49A F49C F68Z
	06	G16A G16B G18A G38A G38B G38C
	15	MSPNG SPNG
	Prä	A11C
Q25.6	05	F03C F03D F49A F49C F68Z
	06	G16A G16B G18A G38A G38B G38C
	15	MSPNG SPNG
	Prä	A11C
Q25.7	Prä	A11C
	05	F03C F03D F49A F49C F68Z
Q25.8	Prä	A11C
	05	F03C F03D F49A F49C F75A F75B F75C F75D
Q25.9	Prä	A11C
	05	F03C F03D F49A F49C F75A F75B F75C F75D
Q26.0	Prä	A11C
	05	F03C F03D F49A F49C F68Z
	06	G16A G16B G18A G38A G38B G38C
Q26.1	Prä	A11C
	05	F03C F03D F49A F49C F68Z
Q26.2	05	F03C F03D F30Z F49A F49C F68Z
	06	G16A G16B G18A G38A G38B G38C
	15	MSPNG SPNG
	Prä	A11C
Q26.3	05	F03C F03D F49A F49C F68Z
	06	G16A G16B G18A G38A G38B G38C
	15	MSPNG SPNG
	Prä	A11C
Q26.4	Prä	A11C
	05	F03C F03D F49A F49C F68Z
Q26.5	Prä	A11C
	05	F03C F03D F49A F49C F68Z
Q26.6	Prä	A11C
	05	F03C F03D F49A F49C F68Z
Q26.8	Prä	A11C
	05	F03C F03D F49A F49C F68Z
Q26.9	Prä	A11C
	05	F03C F03D F49A F49C F68Z
Q27.0	Prä	A11C
	05	F03C F03D F75A F75B F75C F75D
Q27.1	Prä	A11C
	05	F03C F03D F75A F75B F75C F75D
Q27.2	Prä	A11C
	05	F03C F03D F75A F75B F75C F75D
Q27.3	Prä	A11C
	05	F03C F03D F75A

DIAG

ICD	MDC	DRG
		F75B F75C F75D
Q27.4	Prä	A11C
	05	F03C F03D F75A
		F75B F75C F75D
Q27.8	Prä	A11C
	05	F03C F03D F75A
		F75B F75C F75D
Q27.9	Prä	A11C
	05	F03C F03D F75A
		F75B F75C F75D
Q28.00	01	B03A B03B B03C
		B81A B81B B81C
	15	MSPNG SPNG
	Prä	A11C
Q28.01	01	B03A B03B B03C
		B81A B81B B81C
	15	MSPNG SPNG
	Prä	A11C
Q28.08	01	B03A B03B B03C
		B81A B81B B81C
	15	MSPNG SPNG
	Prä	A11C
Q28.09	01	B81A B81B B81C
	15	MSPNG SPNG
	Prä	A11C
Q28.9	Prä	A11C
	05	F03C F03D F75A
		F75B F75C F75D
Q28.10	01	B03A B03B B03C
		B81A B81B B81C
	15	MSPNG SPNG
	Prä	A11C
Q28.11	01	B03A B03B B03C
		B81A B81B B81C
	15	MSPNG SPNG
	Prä	A11C
Q28.18	01	B03A B03B B03C
		B81A B81B B81C
	15	MSPNG SPNG
	Prä	A11C
Q28.19	01	B81A B81B B81C
	15	MSPNG SPNG
	Prä	A11C
Q28.20	01	B03A B03B B03C
		B81A B81B B81C
	15	MSPNG SPNG
	Prä	A11C
Q28.21	01	B03A B03B B03C
		B81A B81B B81C
	15	MSPNG SPNG
	Prä	A11C
Q28.28	01	B03A B03B B03C
		B81A B81B B81C
	15	MSPNG SPNG
	Prä	A11C
Q28.29	01	B81A B81B B81C
	15	MSPNG SPNG
	Prä	A11C
Q28.30	01	B03A B03B B03C
		B81A B81B B81C
	15	MSPNG SPNG
	Prä	A11C
Q28.31	01	B03A B03B B03C
		B81A B81B B81C
	15	MSPNG SPNG
	Prä	A11C
Q28.38	01	B03A B03B B03C
		B81A B81B B81C
	15	MSPNG SPNG
	Prä	A11C
Q28.39	01	B81A B81B B81C
	15	MSPNG SPNG
	Prä	A11C
Q28.80	Prä	A11C
	05	F03C F03D F75A
		F75B F75C F75D
	15	P65B P66B P66C
		P67A P67B P67C
Q28.81	Prä	A11C
	05	F03C F03D F75A
		F75B F75C F75D
	15	P65B P66B P66C
		P67A P67B P67C
Q28.88	Prä	A11C
	05	F03C F03D F75A
		F75B F75C F75D
Q30.0	03	D66A D66B
	15	MSPNG SPNG
	Prä	A11C
Q30.1	03	D66A D66B
Q30.2	03	D66A D66B
Q30.3	03	D66A D66B
Q30.8	03	D66A D66B
Q30.9	03	D66A D66B
Q31.0	03	D66A D66B
	15	MSPNG SPNG
	Prä	A11C
Q31.1	03	D66A D66B
	15	MSPNG SPNG
	Prä	A11C
Q31.2	03	D66A D66B
	15	MSPNG SPNG
	Prä	A11C
Q31.3	03	D66A D66B
	15	MSPNG SPNG
	Prä	A11C
Q31.5	03	D66A D66B
	15	MSPNG SPNG
	Prä	A11C
Q31.8	Prä	A11C
	03	D66A D66B
	15	P65B P66B P66C
		P67A P67B P67C
Q31.9	Prä	A11C
	03	D66A D66B
	15	P65B P66B P66C
		P67A P67B P67C
Q32.0	03	D66A D66B
	15	MSPNG SPNG
	Prä	A11C
Q32.1	03	D66A D66B
	15	MSPNG SPNG
	Prä	A11C
Q32.2	03	D66A D66B
	15	MSPNG SPNG
	Prä	A11C
Q32.3	03	D66A D66B
	15	MSPNG SPNG
	Prä	A11C
Q32.4	03	D66A D66B
	15	MSPNG SPNG
	Prä	A11C
Q33.0	04	E75A E75B E75C
	15	MSPNG SPNG
	Prä	A11C
Q33.1	Prä	A11C
	04	E75A E75B E75C
	15	P65B P66B P66C
		P67A P67B P67C
Q33.2	04	E75A E75B E75C
	15	MSPNG SPNG
	Prä	A11C
Q33.3	04	E75A E75B E75C
	15	MSPNG SPNG
	Prä	A11C
Q33.4	04	E60A E60B E65A
		E65B E65C E65D
	15	MSPNG SPNG
	Prä	A11C
Q33.5	Prä	A11C
	04	E75A E75B E75C
	15	P65B P66B P66C
		P67A P67B P67C
Q33.6	04	E75A E75B E75C
	15	MSPNG SPNG
	Prä	A11C
Q33.8	Prä	A11C
	04	E75A E75B E75C
	15	P65B P66B P66C
		P67A P67B P67C
Q33.9	Prä	A11C
	04	E75A E75B E75C
Q34.0	Prä	A11C
	04	E75A E75B E75C
Q34.1	Prä	A11C
	04	E75A E75B E75C
Q34.8	Prä	A11C
	04	E75A E75B E75C
Q34.9	Prä	A11C
	04	E75A E75B E75C
Q35.1	Prä	A11C
	03	D03A D03B D03C
		D40Z D67A D67B
	15	P65B P66B P66C
		P67A P67B P67C
Q35.3	Prä	A11C
	03	D03A D03B D03C
		D40Z D67A D67B
	15	P65B P66B P66C
		P67A P67B P67C
Q35.5	Prä	A11C
	03	D03A D03B D03C
		D40Z D67A D67B
	15	P65B P66B P66C
		P67A P67B P67C
Q35.7	03	D03A D03B D03C
		D40Z D67A D67B
	15	P65B P66B P66C
		P67A P67B P67C
Q35.9	03	D03A D03B D03C
		D40Z D67A D67B
	15	P65B P66B P66C
		P67A P67B P67C
Q36.0	03	D03A D03B D03C
		D40Z D67A D67B
	15	P65B P66B P66C
		P67A P67B P67C
Q36.1	03	D03A D03B D03C
		D40Z D67A D67B
	15	P65B P66B P66C
		P67A P67B P67C
Q36.9	03	D03A D03B D03C
		D40Z D67A D67B
	15	P65B P66B P66C
		P67A P67B P67C
Q37.0	03	D03A D03B D03C
		D40Z D67A D67B
	15	MSPNG SPNG
	Prä	A11C
Q37.1	03	D03A D03B D03C

ICD	MDC	DRG
		D40Z D67A D67B
	15	MSPNG SPNG
	Prä	A11C
Q37.2	03	D03A D03B D03C
		D40Z D67A D67B
	15	MSPNG SPNG
	Prä	A11C
Q37.3	03	D03A D03B D03C
		D40Z D67A D67B
	15	MSPNG SPNG
	Prä	A11C
Q37.4	03	D03A D03B D03C
		D40Z D67A D67B
	15	MSPNG SPNG
	Prä	A11C
Q37.5	03	D03A D03B D03C
		D40Z D67A D67B
	15	MSPNG SPNG
	Prä	A11C
Q37.8	03	D03A D03B D03C
		D40Z D67A D67B
	15	MSPNG SPNG
Q37.9	03	D03A D03B D03C
		D40Z D67A D67B
	15	MSPNG SPNG
Q38.0	03	D40Z D67A D67B
Q38.1	03	D40Z D67A D67B
Q38.2	03	D40Z D67A D67B
Q38.3	03	D40Z D67A D67B
Q38.4	03	D40Z D67A D67B
Q38.5	03	D03A D03B D03C
		D40Z D67A D67B
Q38.6	03	D40Z D67A D67B
Q38.7	03	D66A D66B
	15	MSPNG SPNG
Q38.8	03	D03A D03B D03C
		D66A D66B
Q39.0	06	G16A G16B G18A
		G38A G38B G38C
		G71A G71B
	15	MSPNG SPNG
	Prä	A11C
Q39.1	06	G16A G16B G18A
		G38A G38B G38C
		G71A G71B
	15	MSPNG SPNG
	Prä	A11C
Q39.2	06	G16A G16B G18A
		G38A G38B G38C
		G71A G71B
	15	MSPNG SPNG
	Prä	A11C
Q39.3	06	G16A G16B G18A
		G38A G38B G38C
		G71A G71B
	15	MSPNG SPNG
	Prä	A11C
Q39.4	06	G16A G16B G18A
		G38A G38B G38C
		G71A G71B
	15	MSPNG SPNG
	Prä	A11C
Q39.5	Prä	A11C
	06	G16A G16B G18A
		G38A G38B G38C
		G71A G71B
	15	P65B P66B P66C
		P67A P67B P67C
Q39.6	Prä	A11C
	06	G16A G16B G18A
		G38A G38B G38C
		G71A G71B
	15	P65B P66B P66C
		P67A P67B P67C
Q39.8	Prä	A11C
	06	G16A G16B G18A
		G38A G38B G38C
		G71A G71B
	15	P65B P66B P66C
		P67A P67B P67C
Q39.9	Prä	A11C
	06	G16A G16B G18A
		G38A G38B G38C
		G71A G71B
Q40.0	06	G16A G16B G18A
		G38A G38B G38C
		G71A G71B
	15	MSPNG SPNG
	Prä	A11C
Q40.1	Prä	A11C
	06	G16A G16B G18A
		G38A G38B G38C
		G71A G71B
	15	P65B P66B P66C
		P67A P67B P67C
Q40.2	Prä	A11C
	06	G16A G16B G18A
		G38A G38B G38C
		G71A G71B
Q40.3	Prä	A11C
	06	G16A G16B G18A
		G38A G38B G38C
		G71A G71B
Q40.8	Prä	A11C
	06	G16A G16B G18A
		G38A G38B G38C
		G71A G71B
Q40.9	Prä	A11C
	06	G16A G16B G18A
		G38A G38B G38C
		G71A G71B
Q41.0	06	G16A G16B G18A
		G38A G38B G38C
		G71A G71B
	15	MSPNG SPNG
	Prä	A11C
Q41.1	06	G16A G16B G18A
		G38A G38B G38C
		G71A G71B
	15	MSPNG SPNG
	Prä	A11C
Q41.2	06	G16A G16B G18A
		G38A G38B G38C
		G71A G71B
	15	MSPNG SPNG
	Prä	A11C
Q41.8	06	G16A G16B G18A
		G38A G38B G38C
		G71A G71B
	15	MSPNG SPNG
	Prä	A11C
Q41.9	06	G16A G16B G18A
		G38A G38B G38C
		G71A G71B
	15	MSPNG SPNG
	Prä	A11C
Q42.0	06	G16A G16B G18A
		G38A G38B G38C
		G71A G71B
	15	MSPNG SPNG
	Prä	A11C
Q42.1	06	G16A G16B G18A
		G38A G38B G38C
		G71A G71B
	15	MSPNG SPNG
	Prä	A11C
Q42.2	06	G16A G16B G18A
		G38A G38B G38C
		G70A G70B G70C
	15	MSPNG SPNG
	Prä	A11C
Q42.3	06	G16A G16B G18A
		G38A G38B G38C
		G70A G70B G70C
	15	MSPNG SPNG
	Prä	A11C
Q42.8	06	G16A G16B G18A
		G38A G38B G38C
		G71A G71B
	15	MSPNG SPNG
	Prä	A11C
Q42.9	06	G16A G16B G18A
		G38A G38B G38C
		G71A G71B
	15	MSPNG SPNG
	Prä	A11C
Q43.0	06	G67A G67B G67C
		G67D
	15	MSPNG SPNG
	Prä	A11C
Q43.1	06	G16A G16B G18A
		G38A G38B G38C
		G71A G71B
	15	MSPNG SPNG
	Prä	A11C
Q43.2	Prä	A11C
	06	G16A G16B G18A
		G38A G38B G38C
		G71A G71B
Q43.3	06	G16A G16B G18A
		G38A G38B G38C
		G71A G71B
	15	MSPNG SPNG
	Prä	A11C
Q43.5	Prä	A11C
	06	G16A G16B G18A
		G38A G38B G38C
		G71A G71B
	15	P65B P66B P66C
		P67A P67B P67C
Q43.6	Prä	A11C
	06	G16A G16B G18A
		G38A G38B G38C
		G71A G71B
	15	P65B P66B P66C
		P67A P67B P67C
Q43.7	Prä	A11C
	06	G16A G16B G18A
		G38A G38B G38C
		G71A G71B
	15	P65B P66B P66C
		P67A P67B P67C
Q43.8	Prä	A11C
	06	G16A G16B G18A
		G38A G38B G38C
		G71A G71B
	15	P65B P66B P66C
		P67A P67B P67C
Q43.9	Prä	A11C
	06	G16A G16B G18A

DIAG

ICD	MDC	DRG
		G38A G38B G38C
		G71A G71B
	15	P65B P66B P66C
		P67A P67B P67C
Q43.40	Prä	A11C
	06	G16A G16B G18A
		G38A G38B G38C
		G71A G71B
	15	P65B P66B P66C
		P67A P67B P67C
Q43.41	Prä	A11C
	06	G16A G16B G18A
		G38A G38B G38C
		G71A G71B
	15	P65B P66B P66C
		P67A P67B P67C
Q43.42	Prä	A11C
	06	G16A G16B G18A
		G38A G38B G38C
		G71A G71B
	15	P65B P66B P66C
		P67A P67B P67C
Q43.49	Prä	A11C
	06	G16A G16B G18A
		G38A G38B G38C
		G71A G71B
	15	P65B P66B P66C
		P67A P67B P67C
Q44.0	Prä	A11C
	07	H63A H63B H63C
		H63D
Q44.1	Prä	A11C
	07	H63A H63B H63C
		H63D
Q44.2	06	G16A G16B G18A
		G38A G38B G38C
	07	H64A H64B H64C
	15	MSPNG SPNG
	Prä	A11C
Q44.3	06	G16A G16B G18A
		G38A G38B G38C
	07	H64A H64B H64C
	15	MSPNG SPNG
	Prä	A11C
Q44.4	Prä	A11C
	07	H63A H63B H63C
		H63D
Q44.5	Prä	A11C
	07	H63A H63B H63C
		H63D
Q44.6	07	H63A H63B H63C
		H63D
	15	MSPNG SPNG
	Prä	A11C
Q44.7	07	H63A H63B H63C
		H63D
	15	MSPNG SPNG
	Prä	A11C
Q45.0	07	H62A H62B H62C
	15	MSPNG SPNG
	Prä	A11C
Q45.1	07	H62A H62B H62C
	15	MSPNG SPNG
	Prä	A11C
Q45.2	07	H62A H62B H62C
	15	MSPNG SPNG
	Prä	A11C
Q45.3	07	H62A H62B H62C
	15	MSPNG SPNG
	Prä	A11C
Q45.8	Prä	A11C
	06	G16A G16B G18A
		G38A G38B G38C
		G71A G71B
Q45.9	Prä	A11C
	06	G16A G16B G18A
		G38A G38B G38C
		G71A G71B
Q50.0	13	N62A N62B
Q50.1	13	N62A N62B
Q50.2	13	N62A N62B
Q50.3	13	N62A N62B
Q50.4	13	N62A N62B
Q50.5	13	N62A N62B
Q50.6	13	N62A N62B
Q51.0	13	N62A N62B
Q51.1	13	N62A N62B
Q51.2	13	N62A N62B
Q51.3	13	N62A N62B
Q51.4	13	N62A N62B
Q51.5	13	N62A N62B
Q51.6	13	N62A N62B
Q51.7	13	N62A N62B
Q51.8	13	N62A N62B
Q51.9	13	N62A N62B
Q52.0	13	N62A N62B
Q52.1	13	N62A N62B
Q52.2	13	N62A N62B
Q52.3	13	N62A N62B
Q52.4	13	N62A N62B
Q52.5	13	N62A N62B
Q52.6	13	N62A N62B
Q52.7	13	N62A N62B
Q52.8	13	N62A N62B
Q52.9	13	N62A N62B
Q53.0	12	M64Z
Q53.1	12	M64Z
Q53.2	12	M64Z
Q53.9	12	M64Z
Q54.0	12	M64Z
Q54.1	12	M64Z
Q54.2	12	M64Z
Q54.3	12	M64Z
Q54.4	12	M64Z
Q54.8	12	M64Z
Q54.9	12	M64Z
Q55.0	12	M64Z
Q55.1	12	M64Z
Q55.2	12	M64Z
Q55.3	12	M64Z
Q55.4	12	M64Z
Q55.5	12	M64Z
Q55.6	12	M64Z
Q55.8	12	M64Z
Q55.9	12	M64Z
Q56.0	10	K64A K64B K64C
	15	MSPNG SPNG
Q56.1	10	K64A K64B K64C
	15	MSPNG SPNG
Q56.2	10	K64A K64B K64C
	15	MSPNG SPNG
Q56.3	10	K64A K64B K64C
	15	MSPNG SPNG
Q56.4	10	K64A K64B K64C
	15	MSPNG SPNG
Q60.0	11	L64A L64B L68B
	15	MSPNG SPNG
Q60.1	06	G16A G16B G18A
		G38A G38B G38C
	11	L68A L68B L68C
	15	MSPNG SPNG
	Prä	A11C
Q60.2	11	L64A L64B L68B
	15	MSPNG SPNG
Q60.3	11	L64A L64B L68B
	15	MSPNG SPNG
Q60.4	06	G16A G16B G18A
		G38A G38B G38C
	11	L68A L68B L68C
	15	MSPNG SPNG
Q60.5	11	L64A L64B L68B
	15	MSPNG SPNG
Q60.6	06	G16A G16B G18A
		G38A G38B G38C
	11	L64A L64B L68B
	15	MSPNG SPNG
Q61.0	11	L68A L68B L68C
	15	P65B P66B P66C
		P67A P67B P67C
Q61.1	11	L68A L68B L68C
	15	MSPNG SPNG
Q61.2	11	L68A L68B L68C
	15	P65B P66B P66C
		P67A P67B P67C
Q61.3	11	L68A L68B L68C
	15	P65B P66B P66C
		P67A P67B P67C
Q61.4	11	L68A L68B L68C
	15	P65B P66B P66C
		P67A P67B P67C
Q61.5	11	L68A L68B L68C
	15	P65B P66B P66C
		P67A P67B P67C
Q61.8	11	L68A L68B L68C
	15	P65B P66B P66C
		P67A P67B P67C
Q61.9	11	L68A L68B L68C
	15	P65B P66B P66C
		P67A P67B P67C
Q62.0	11	L64A L64B
	15	P65B P66B P66C
		P67A P67B P67C
Q62.1	11	L64A L64B
	15	P65B P66B P66C
		P67A P67B P67C
Q62.2	11	L64A L64B
	15	P65B P66B P66C
		P67A P67B P67C
Q62.3	11	L64A L64B
	15	P65B P66B P66C
		P67A P67B P67C
Q62.4	11	L64A L64B
Q62.5	11	L64A L64B
Q62.6	11	L64A L64B
Q62.7	11	L64A L64B
Q62.8	11	L64A L64B
Q63.0	11	L64A L64B
Q63.1	11	L64A L64B
Q63.2	11	L64A L64B
Q63.3	11	L64A L64B
Q63.8	11	L64A L64B
Q63.9	11	L64A L64B
Q64.0	12	M64Z
	13	N62A N62B
Q64.1	11	L68A L68B L68C
	15	MSPNG SPNG
Q64.2	11	L68A L68B L68C
	15	MSPNG SPNG
Q64.3	11	L68A L68B L68C
	15	MSPNG SPNG

ICD	MDC	DRG
Q64.4	11	L68A L68B L68C
	15	P65B P66B P66C
		P67A P67B P67C
Q64.5	11	L68A L68B L68C
	15	P65B P66B P66C
		P67A P67B P67C
Q64.6	11	L68A L68B L68C
	15	P65B P66B P66C
		P67A P67B P67C
Q64.7	11	L68A L68B L68C
	15	P65B P66B P66C
		P67A P67B P67C
Q64.8	11	L68A L68B L68C
Q64.9	11	L68A L68B L68C
Q65.0	08	I76A I76B
Q65.1	08	I76A I76B
Q65.2	08	I76A I76B
Q65.3	08	I76A I76B
Q65.4	08	I76A I76B
Q65.5	08	I76A I76B
Q65.6	08	I76A I76B
Q65.8	08	I76A I76B
Q65.9	08	I76A I76B
Q66.0	08	I76A I76B
Q66.1	08	I76A I76B
Q66.2	08	I76A I76B
Q66.3	08	I76A I76B
Q66.4	08	I76A I76B
Q66.5	08	I20A I76A I76B
Q66.6	08	I76A I76B
Q66.7	08	I76A I76B
Q66.8	08	I76A I76B
Q66.9	08	I76A I76B
Q67.0	03	D66A D66B
	15	P65B P66B P66C
		P67A P67B P67C
Q67.1	03	D66A D66B
Q67.2	01	B09C B79Z
Q67.3	01	B09C B79Z
Q67.4	03	D66A D66B
Q67.5	08	I02A I02B I02C
		I06B I09C I09D
		I76A I76B
	15	P65B P66B P66C
		P67A P67B P67C
Q67.6	04	E75A E75B E75C
Q67.7	04	E75A E75B E75C
Q67.8	04	E75A E75B E75C
Q68.0	08	I76A I76B
Q68.1	08	I02A I02B I02C
		I32A I32B I32C
		I32D I32E I32F
		I76A I76B
Q68.2	08	I77A I77B
	15	P65B P66B P66C
		P67A P67B P67C
Q68.3	08	I76A I76B
Q68.4	08	I76A I76B
Q68.5	08	I76A I76B
Q68.8	08	I76A I76B
Q69.0	08	I32C I76A I76B
Q69.1	08	I32C I76A I76B
Q69.2	08	I76A I76B
Q69.9	08	I32C I76A I76B
Q70.0	08	I32C I76A I76B
Q70.1	08	I32C I76A I76B
Q70.2	08	I76A I76B
Q70.3	08	I76A I76B
Q70.4	08	I32C I76A I76B
Q70.9	08	I32C I76A I76B
Q71.0	08	I02A I02B I02C
		I08B I11Z I13A
		I32A I32B I32C
		I32D I32E I32F
		I76A I76B
	15	P65B P66B P66C
		P67A P67B P67C
Q71.1	08	I02A I02B I02C
		I08B I11Z I13A
		I32A I32B I32C
		I32D I32E I32F
		I76A I76B
	15	P65B P66B P66C
		P67A P67B P67C
Q71.2	08	I08B I11Z I13A
		I32C I76A I76B
	15	P65B P66B P66C
		P67A P67B P67C
Q71.3	08	I02A I02B I02C
		I08B I11Z I13A
		I32A I32B I32C
		I32D I32E I32F
		I76A I76B
Q71.4	08	I08B I11Z I13A
		I32C I76A I76B
	15	P65B P66B P66C
		P67A P67B P67C
Q71.5	08	I08B I11Z I13A
		I32C I76A I76B
	15	P65B P66B P66C
		P67A P67B P67C
Q71.6	08	I02A I02B I02C
		I08B I11Z I13A
		I32A I32B I32C
		I32D I32E I32F
		I76A I76B
	15	P65B P66B P66C
		P67A P67B P67C
Q71.8	08	I08B I11Z I13A
		I32C I76A I76B
Q71.9	08	I08B I11Z I13A
		I32C I76A I76B
Q72.0	08	I08B I11Z I13A
		I76A I76B
	15	P65B P66B P66C
		P67A P67B P67C
Q72.1	08	I08B I11Z I13A
		I76A I76B
	15	P65B P66B P66C
		P67A P67B P67C
Q72.2	08	I08B I11Z I13A
		I76A I76B
	15	P65B P66B P66C
		P67A P67B P67C
Q72.3	08	I08B I11Z I13A
		I76A I76B
	15	P65B P66B P66C
		P67A P67B P67C
Q72.4	08	I08B I11Z I13A
		I76A I76B
	15	P65B P66B P66C
		P67A P67B P67C
Q72.5	08	I08B I11Z I13A
		I76A I76B
	15	P65B P66B P66C
		P67A P67B P67C
Q72.6	08	I08B I11Z I13A
		I76A I76B
	15	P65B P66B P66C
		P67A P67B P67C
Q72.7	08	I08B I11Z I13A
		I76A I76B
	15	P65B P66B P66C
		P67A P67B P67C
Q72.8	08	I08B I11Z I13A
		I76A I76B
	15	P65B P66B P66C
		P67A P67B P67C
Q72.9	08	I08B I11Z I13A
		I76A I76B
Q73.0	08	I08B I11Z I13A
		I76A I76B
Q73.1	08	I08B I11Z I13A
		I76A I76B
Q73.8	08	I08B I11Z I13A
		I76A I76B
Q74.0	08	I08B I11Z I13A
		I76A I76B
Q74.1	08	I08B I11Z I13A
		I76A I76B
Q74.2	08	I08B I11Z I13A
		I76A I76B
Q74.3	08	I08B I11Z I13A
		I76A I76B
	15	MSPNG SPNG
Q74.8	08	I08B I11Z I13A
		I76A I76B
Q74.9	08	I08B I11Z I13A
		I76A I76B
Q75.0	01	B09C B79Z
	15	MSPNG SPNG
Q75.1	01	B09C B79Z
	15	MSPNG SPNG
Q75.2	01	B09C B79Z
	15	MSPNG SPNG
Q75.3	01	B09C B79Z
	15	MSPNG SPNG
Q75.4	03	D66A D66B
	15	MSPNG SPNG
Q75.5	03	D66A D66B
	15	MSPNG SPNG
Q75.8	01	B09C B79Z
	15	MSPNG SPNG
Q75.9	01	B09C B79Z
	15	MSPNG SPNG
Q76.0	01	B03A B03B B03C
		B81A B81B B81C
Q76.1	08	I76A I76B
	15	MSPNG SPNG
Q76.3	08	I02A I02B I02C
		I06B I09C I09D
		I68A I68B I68C
		I68D
	15	P65B P66B P66C
		P67A P67B P67C
Q76.4	08	I68A I68B I68C
		I68D
	15	P65B P66B P66C
		P67A P67B P67C
Q76.5	08	I76A I76B
Q76.6	04	E75A E75B E75C
Q76.7	04	E75A E75B E75C
Q76.8	08	I76A I76B
Q76.9	08	I76A I76B
Q76.21	08	I68A I68B I68C
		I68D
Q76.22	08	I68A I68B I68C
		I68D
Q77.0	08	I76A I76B
	15	MSPNG SPNG

DIAG

ICD	MDC	DRG
	Prä	A11C
Q77.1	08	I76A I76B
	15	MSPNG SPNG
	Prä	A11C
Q77.2	08	I76A I76B
	15	MSPNG SPNG
	Prä	A11C
Q77.3	08	I76A I76B
	15	MSPNG SPNG
	Prä	A11C
Q77.4	08	I76A I76B
	15	MSPNG SPNG
	Prä	A11C
Q77.5	08	I76A I76B
	15	MSPNG SPNG
	Prä	A11C
Q77.6	08	I76A I76B
	15	MSPNG SPNG
	Prä	A11C
Q77.7	08	I76A I76B
	15	MSPNG SPNG
	Prä	A11C
Q77.8	08	I76A I76B
	15	MSPNG SPNG
	Prä	A11C
Q77.9	08	I76A I76B
	15	MSPNG SPNG
	Prä	A11C
Q78.0	08	I76A I76B
	15	MSPNG SPNG
	Prä	A11C
Q78.1	08	I76A I76B
	15	MSPNG SPNG
	Prä	A11C
Q78.2	08	I76A I76B
	15	MSPNG SPNG
	Prä	A11C
Q78.3	08	I76A I76B
	15	MSPNG SPNG
	Prä	A11C
Q78.4	08	I76A I76B
	15	MSPNG SPNG
	Prä	A11C
Q78.5	Prä	A11C
	08	I76A I76B
Q78.6	08	I76A I76B
	15	MSPNG SPNG
	Prä	A11C
Q78.8	Prä	A11C
	08	I76A I76B
Q78.9	08	I76A I76B
	15	MSPNG SPNG
	Prä	A11C
Q79.0	04	E75A E75B E75C
	06	G16A G16B G18A
		G38A G38B G38C
	15	MSPNG SPNG
	Prä	A11C
Q79.1	04	E75A E75B E75C
	15	MSPNG SPNG
	Prä	A11C
Q79.2	06	G16A G16B G18A
		G38A G38B G38C
		G71A G71B
	15	MSPNG SPNG
	Prä	A11C
Q79.3	06	G16A G16B G18A
		G38A G38B G38C
		G71A G71B
	15	MSPNG SPNG

ICD	MDC	DRG
	Prä	A11C
Q79.4	06	G16A G16B G18A
		G38A G38B G38C
		G71A G71B
	15	MSPNG SPNG
	Prä	A11C
Q79.5	06	G16A G16B G18A
		G38A G38B G38C
		G71A G71B
	15	MSPNG SPNG
	Prä	A11C
Q79.6	08	I76A I76B
	15	MSPNG SPNG
	Prä	A11C
Q79.8	Prä	A11C
	08	I76A I76B
Q79.9	Prä	A11C
	08	I76A I76B
Q80.0	09	J02A J02B J08Z
		J61A J61B
	15	MSPNG SPNG
	Prä	A11C
Q80.1	09	J02A J02B J08Z
		J61A J61B
	15	MSPNG SPNG
	Prä	A11C
Q80.2	09	J02A J02B J08Z
		J61A J61B
	15	MSPNG SPNG
	Prä	A11C
Q80.3	09	J02A J02B J08Z
		J61A J61B
	15	MSPNG SPNG
	Prä	A11C
Q80.4	09	J02A J02B J08Z
		J61A J61B
	15	MSPNG SPNG
	Prä	A11C
Q80.8	09	J02A J02B J08Z
		J61A J61B
	15	MSPNG SPNG
	Prä	A11C
Q80.9	09	J02A J02B J08Z
		J61A J61B
	15	MSPNG SPNG
	Prä	A11C
Q81.0	09	J67Z J86A
	15	MSPNG P66A P67A
		SPNG
	Prä	A11C
Q81.1	09	J02A J02B J08Z
		J61A J61B J86A
	15	MSPNG P66A P67A
		SPNG
	Prä	A11C
Q81.2	09	J02A J02B J08Z
		J61A J61B J86A
	15	MSPNG P66A P67A
		SPNG
	Prä	A11C
Q81.8	09	J67Z J86A
	15	MSPNG P66A P67A
		SPNG
	Prä	A11C
Q81.9	09	J67Z J86A
	15	MSPNG P66A P67A
		SPNG
	Prä	A11C
Q82.00	Prä	A11C
	09	J02A J02B J03A

ICD	MDC	DRG
		J03B J04Z J67Z
	15	P65B P66B P66C
		P67A P67B P67C
Q82.01	Prä	A11C
	09	J02A J02B J03A
		J03B J04Z J67Z
	15	P65B P66B P66C
		P67A P67B P67C
Q82.1	Prä	A11C
	09	J61A J61B J61C
		J61D
Q82.02	Prä	A11C
	09	J02A J02B J03A
		J03B J04Z J67Z
	15	P65B P66B P66C
		P67A P67B P67C
Q82.2	Prä	A11C
	09	J67Z
Q82.03	Prä	A11C
	09	J02A J02B J03A
		J03B J04Z J67Z
	15	P65B P66B P66C
		P67A P67B P67C
Q82.3	Prä	A11C
	09	J67Z
Q82.04	Prä	A11C
	09	J02A J02B J03A
		J03B J04Z J67Z
	15	P65B P66B P66C
		P67A P67B P67C
Q82.4	09	J67Z
	15	MSPNG SPNG
Q82.05	Prä	A11C
	09	J02A J02B J03A
		J03B J04Z J67Z
	15	P65B P66B P66C
		P67A P67B P67C
Q82.5	09	J67Z
Q82.08	Prä	A11C
	09	J02A J02B J03A
		J03B J04Z J67Z
	15	P65B P66B P66C
		P67A P67B P67C
Q82.8	09	J67Z
Q82.09	Prä	A11C
	09	J02A J02B J03A
		J03B J04Z J67Z
	15	P65B P66B P66C
		P67A P67B P67C
Q82.9	09	J67Z
Q83.0	09	J67Z
Q83.1	09	J67Z
Q83.2	09	J67Z
Q83.3	09	J67Z
Q83.9	09	J67Z
Q83.80	09	J01A J01B J67Z
Q83.88	09	J01A J01B J67Z
Q84.0	09	J67Z
Q84.1	09	J67Z
Q84.2	09	J67Z
Q84.3	09	J67Z
Q84.4	09	J67Z
Q84.5	09	J67Z
Q84.6	09	J67Z
Q84.8	09	J67Z
Q84.9	09	J67Z
Q85.0	01	B81A B81B B81C
	15	MSPNG SPNG
	Prä	A11C
Q85.1	01	B03A B03B B03C

ICD	MDC	DRG
		B81A B81B B81C
	15	MSPNG SPNG
	Prä	A11C
Q85.8	15	MSPNG SPNG
	17	R62A R62B
	Prä	A11C
Q85.9	15	MSPNG SPNG
	17	R62A R62B
	Prä	A11C
Q86.0	Prä	A11C
	06	G16A G16B G18A
		G38A G38B G38C
	23	Z65A Z65B
Q86.1	15	MSPNG SPNG
	23	Z65A Z65B
	Prä	A11C
Q86.2	15	MSPNG SPNG
	23	Z65A Z65B
	Prä	A11C
Q86.80	Prä	A11C
	23	Z65A Z65B
Q86.88	Prä	A11C
	23	Z65A Z65B
Q87.0	03	D66A D66B
	04	E77A E77B
	06	G16A G16B G18A
		G38A G38B G38C
	15	MSPNG SPNG
	Prä	961Z A11C
Q87.1	04	E77A E77B
	06	G16A G16B G18A
		G38A G38B G38C
	15	MSPNG SPNG
	Prä	961Z A11C
Q87.2	04	E77A E77B
	06	G16A G16B G18A
		G38A G38B G38C
	08	I76A I76B
	15	MSPNG SPNG
	Prä	961Z A11C
Q87.3	04	E77A E77B
	06	G16A G16B G18A
		G38A G38B G38C
	15	MSPNG SPNG
	Prä	961Z A11C
Q87.4	04	E77A E77B
	05	F68Z
	06	G16A G16B G18A
		G38A G38B G38C
	15	MSPNG SPNG
	Prä	A11C
Q87.5	Prä	961Z A11C
	04	E77A E77B
	06	G16A G16B G18A
		G38A G38B G38C
	08	I76A I76B
Q87.8	04	E77A E77B
	06	G16A G16B G18A
		G38A G38B G38C
	15	MSPNG SPNG
	Prä	961Z A11C
Q89.00	Prä	A11C
	15	P65B P66B P66C
		P67A P67B P67C
	16	Q60A Q60B Q60C
Q89.01	Prä	A11C
	15	P65B P66B P66C
		P67A P67B P67C
	16	Q60A Q60B Q60C
Q89.1	10	K64A K64B K64C
	15	MSPNG SPNG
	Prä	A11C
Q89.2	Prä	A11C
	10	K64A K64B K64C
Q89.3	06	G16A G16B G18A
		G38A G38B G38C
		G71A G71B
	15	P65B P66B P66C
		P67A P67B P67C
Q89.4	06	G16A G16B G18A
		G38A G38B G38C
	15	MSPNG SPNG
	23	Z65A Z65B
	Prä	A11C
Q89.7	Prä	A11C
	23	Z65A Z65B
Q89.08	Prä	A11C
	15	P65B P66B P66C
		P67A P67B P67C
	16	Q60A Q60B Q60C
Q89.8	Prä	A11C
	23	Z65A Z65B
Q89.9	Prä	A11C
	23	Z65A Z65B
Q90.0	01	B81A B81B B81C
	03	D30A
	04	E70A E70B E86B
	06	G16A G16B G18A
		G38A G38B G38C
	15	MSPNG SPNG
	Prä	A11C
Q90.1	01	B81A B81B B81C
	03	D30A
	04	E70A E70B E86B
	06	G16A G16B G18A
		G38A G38B G38C
	15	MSPNG SPNG
	Prä	A11C
Q90.2	01	B81A B81B B81C
	03	D30A
	04	E70A E70B E86B
	06	G16A G16B G18A
		G38A G38B G38C
	15	MSPNG SPNG
	Prä	A11C
Q90.9	01	B81A B81B B81C
	03	D30A
	04	E70A E70B E86B
	06	G16A G16B G18A
		G38A G38B G38C
	15	MSPNG SPNG
	Prä	A11C
Q91.0	01	B81A B81B B81C
	03	D30A
	04	E70A E70B E86B
	06	G16A G16B G18A
		G38A G38B G38C
	15	MSPNG SPNG
	Prä	A11C
Q91.1	01	B81A B81B B81C
	03	D30A
	04	E70A E70B E86B
	06	G16A G16B G18A
		G38A G38B G38C
	15	MSPNG SPNG
	Prä	A11C
Q91.2	01	B81A B81B B81C
	03	D30A
	04	E70A E70B E86B
	06	G16A G16B G18A
		G38A G38B G38C
	15	MSPNG SPNG
	Prä	A11C
Q91.3	01	B81A B81B B81C
	03	D30A
	04	E70A E70B E86B
	06	G16A G16B G18A
		G38A G38B G38C
	15	MSPNG SPNG
	Prä	A11C
Q91.4	01	B81A B81B B81C
	03	D30A
	04	E70A E70B E86B
	06	G16A G16B G18A
		G38A G38B G38C
	15	MSPNG SPNG
	Prä	A11C
Q91.5	01	B81A B81B B81C
	03	D30A
	04	E70A E70B E86B
	06	G16A G16B G18A
		G38A G38B G38C
	15	MSPNG SPNG
	Prä	A11C
Q91.6	01	B81A B81B B81C
	03	D30A
	04	E70A E70B E86B
	06	G16A G16B G18A
		G38A G38B G38C
	15	MSPNG SPNG
	Prä	A11C
Q91.7	01	B81A B81B B81C
	03	D30A
	04	E70A E70B E86B
	06	G16A G16B G18A
		G38A G38B G38C
	15	MSPNG SPNG
	Prä	A11C
Q92.0	01	B81A B81B B81C
	03	D30A
	04	E70A E70B E86B
	06	G16A G16B G18A
		G38A G38B G38C
	15	MSPNG SPNG
	Prä	A11C
Q92.1	01	B81A B81B B81C
	03	D30A
	04	E70A E70B E86B
	06	G16A G16B G18A
		G38A G38B G38C
	15	MSPNG SPNG
	Prä	A11C
Q92.2	01	B81A B81B B81C
	03	D30A
	04	E70A E70B E86B
	06	G16A G16B G18A
		G38A G38B G38C
	15	MSPNG SPNG
	Prä	A11C
Q92.3	01	B81A B81B B81C
	03	D30A
	04	E70A E70B E86B
	06	G16A G16B G18A
		G38A G38B G38C
	15	MSPNG SPNG
	Prä	A11C
Q92.4	01	B81A B81B B81C
	03	D30A
	04	E70A E70B E86B
	15	MSPNG SPNG

DIAG

ICD	MDC	DRG
	Prä	A11C
Q92.5	01	B81A B81B B81C
	03	D30A
	04	E70A E70B E86B
	15	MSPNG SPNG
	Prä	A11C
Q92.6	01	B81A B81B B81C
	03	D30A
	04	E70A E70B E86B
	15	MSPNG SPNG
	Prä	A11C
Q92.7	01	B81A B81B B81C
	03	D30A
	04	E70A E70B E86B
	15	MSPNG SPNG
	Prä	A11C
Q92.8	01	B81A B81B B81C
	03	D30A
	04	E70A E70B E86B
	15	MSPNG SPNG
	Prä	A11C
Q92.9	01	B81A B81B B81C
	03	D30A
	04	E70A E70B E86B
	15	MSPNG SPNG
	Prä	A11C
Q93.0	01	B81A B81B B81C
	03	D30A
	04	E70A E70B E86B
	15	MSPNG SPNG
	Prä	A11C
Q93.1	01	B81A B81B B81C
	03	D30A
	04	E70A E70B E86B
	15	MSPNG SPNG
	Prä	A11C
Q93.2	01	B81A B81B B81C
	03	D30A
	04	E70A E70B E86B
	15	MSPNG SPNG
	Prä	A11C
Q93.3	01	B81A B81B B81C
	03	D30A
	04	E70A E70B E86B
	15	MSPNG SPNG
	Prä	A11C
Q93.4	01	B81A B81B B81C
	03	D30A
	04	E70A E70B E86B
	15	MSPNG SPNG
	Prä	A11C
Q93.5	01	B81A B81B B81C
	03	D30A
	04	E70A E70B E86B
	15	MSPNG SPNG
	Prä	A11C
Q93.6	01	B81A B81B B81C
	03	D30A
	04	E70A E70B E86B
	15	MSPNG SPNG
	Prä	A11C
Q93.7	01	B81A B81B B81C
	03	D30A
	04	E70A E70B E86B
	15	MSPNG SPNG
	Prä	A11C
Q93.8	01	B81A B81B B81C
	03	D30A
	04	E70A E70B E86B
	15	MSPNG SPNG
	Prä	A11C
Q93.9	01	B81A B81B B81C
	03	D30A
	04	E70A E70B E86B
	15	MSPNG SPNG
	Prä	A11C
Q95.0	Prä	A11C
	23	Z64A Z64B Z64C
Q95.1	Prä	A11C
	23	Z64A Z64B Z64C
Q95.2	15	MSPNG SPNG
	23	Z64A Z64B Z64C
	Prä	A11C
Q95.3	15	MSPNG SPNG
	23	Z64A Z64B Z64C
	Prä	A11C
Q95.4	15	MSPNG SPNG
	23	Z64A Z64B Z64C
	Prä	A11C
Q95.5	15	MSPNG SPNG
	23	Z64A Z64B Z64C
	Prä	A11C
Q95.8	15	MSPNG SPNG
	23	Z64A Z64B Z64C
	Prä	A11C
Q95.9	15	MSPNG SPNG
	23	Z64A Z64B Z64C
	Prä	A11C
Q96.0	Prä	A11C
	12	M64Z
	13	N62A N62B
	15	P65B P66B P66C
		P67A P67B P67C
Q96.1	Prä	A11C
	12	M64Z
	13	N62A N62B
	15	P65B P66B P66C
		P67A P67B P67C
Q96.2	Prä	A11C
	12	M64Z
	13	N62A N62B
	15	P65B P66B P66C
		P67A P67B P67C
Q96.3	Prä	A11C
	12	M64Z
	13	N62A N62B
	15	P65B P66B P66C
		P67A P67B P67C
Q96.4	Prä	A11C
	12	M64Z
	13	N62A N62B
	15	P65B P66B P66C
		P67A P67B P67C
Q96.8	Prä	A11C
	12	M64Z
	13	N62A N62B
	15	P65B P66B P66C
		P67A P67B P67C
Q96.9	Prä	A11C
	12	M64Z
	13	N62A N62B
	15	P65B P66B P66C
		P67A P67B P67C
Q97.0	Prä	A11C
	12	M64Z
	13	N62A N62B
	15	P65B P66B P66C
		P67A P67B P67C
Q97.1	Prä	A11C
	12	M64Z
	13	N62A N62B
	15	P65B P66B P66C
		P67A P67B P67C
Q97.2	Prä	A11C
	12	M64Z
	13	N62A N62B
	15	P65B P66B P66C
		P67A P67B P67C
Q97.3	Prä	A11C
	12	M64Z
	13	N62A N62B
	15	P65B P66B P66C
		P67A P67B P67C
Q97.8	Prä	A11C
	12	M64Z
	13	N62A N62B
	15	P65B P66B P66C
		P67A P67B P67C
Q97.9	Prä	A11C
	12	M64Z
	13	N62A N62B
	15	P65B P66B P66C
		P67A P67B P67C
Q98.0	Prä	A11C
	12	M64Z
	13	N62A N62B
	15	P65B P66B P66C
		P67A P67B P67C
Q98.1	Prä	A11C
	12	M64Z
	13	N62A N62B
	15	P65B P66B P66C
		P67A P67B P67C
Q98.2	Prä	A11C
	12	M64Z
	13	N62A N62B
	15	P65B P66B P66C
		P67A P67B P67C
Q98.3	Prä	A11C
	12	M64Z
	13	N62A N62B
	15	P65B P66B P66C
		P67A P67B P67C
Q98.4	Prä	A11C
	12	M64Z
	13	N62A N62B
	15	P65B P66B P66C
		P67A P67B P67C
Q98.5	Prä	A11C
	12	M64Z
	13	N62A N62B
	15	P65B P66B P66C
		P67A P67B P67C
Q98.6	Prä	A11C
	12	M64Z
	13	N62A N62B
	15	P65B P66B P66C
		P67A P67B P67C
Q98.7	Prä	A11C
	12	M64Z
	13	N62A N62B
	15	P65B P66B P66C
		P67A P67B P67C
Q98.8	Prä	A11C
	12	M64Z
	13	N62A N62B
	15	P65B P66B P66C
		P67A P67B P67C
Q98.9	Prä	A11C
	12	M64Z

ICD	MDC	DRG
	13	N62A N62B
	15	P65B P66B P66C
		P67A P67B P67C
Q99.0	10	K64A K64B K64C
	15	MSPNG SPNG
	Prä	A11C
Q99.1	10	K64A K64B K64C
	15	MSPNG SPNG
	Prä	A11C
Q99.2	15	MSPNG SPNG
	23	Z65A Z65B
	Prä	A11C
Q99.8	Prä	A11C
	12	M64Z
	13	N62A N62B
	15	P65B P66B P66C
		P67A P67B P67C
Q99.9	Prä	A11C
	23	Z65A Z65B
R00.0	05	F66A F66B
R00.1	05	F66A F66B
R00.2	05	F66A F66B
R00.3	05	F75A F75B F75C
		F75D
R00.8	05	F75A F75B F75C
		F75D
R01.0	05	F69A F69B
R01.1	05	F69A F69B
R01.2	05	F75A F75B F75C
		F75D
R02.00	09	J67Z
R02.01	09	J67Z
R02.02	09	J67Z
R02.03	09	J67Z
R02.04	09	J67Z
R02.05	09	J67Z
R02.06	09	J67Z
R02.07	09	J67Z
R02.8	05	F75A F75B F75C
		F75D
	15	MSPNG SPNG
R02.09	09	J67Z
R03.0	05	F75A F75B F75C
		F75D
R03.1	05	F75A F75B F75C
		F75D
R04.0	03	D62A D62B D62C
R04.1	03	D62A D62B D62C
R04.2	04	E75A E75B E75C
R04.8	04	E75A E75B E75C
R04.9	04	E75A E75B E75C
R05	04	E75A E75B E75C
R06.0	04	E75A E75B E75C
R06.1	04	E75A E75B E75C
R06.2	04	E75A E75B E75C
R06.3	04	E75A E75B E75C
R06.4	04	E75A E75B E75C
R06.5	03	D66A D66B
R06.6	04	E75A E75B E75C
R06.7	03	D66A D66B
R06.80	04	E75A E75B E75C
	15	P65B P66B P66C
		P67A P67B P67C
R06.88	04	E75A E75B E75C
R07.0	03	D66A D66B
R07.1	04	E75A E75B E75C
R07.2	05	F74A F74B
R07.3	05	F74A F74B
R07.4	05	F74A F74B
R09.0	Prä	A11C

ICD	MDC	DRG
	04	E75A E75B E75C
R09.1	04	E77A E77B E77C
R09.2	04	E75A E75B E75C
	15	P65B P66B P66C
		P67A P67B P67C
R09.3	04	E75A E75B E75C
R09.8	04	E75A E75B E75C
R10.0	06	G72A G72B
R10.1	06	G72A G72B
R10.2	12	M64Z
	13	N62B
R10.3	06	G72A G72B
R10.4	06	G72A G72B
R11	06	G72A G72B
R12	06	G72A G72B
R13.0	06	G67A G67B G67C
		G67D
R13.1	06	G67A G67B G67C
		G67D
R13.9	06	G72A G72B
R14	06	G72A G72B
R15	06	G72A G72B
R16.0	07	H63A H63B H63C
		H63D
R16.1	16	Q60A Q60B Q60C
R16.2	07	H63A H63B H63C
		H63D
	15	MSPNG SPNG
R17.0	07	H63A H63B H63C
		H63D
R17.9	07	H63A H63B H63C
		H63D
R18	23	Z65A Z65B
R19.0	06	G72A G72B
R19.1	06	G72A G72B
R19.2	06	G72A G72B
R19.3	06	G71A G71B
R19.4	06	G72A G72B
R19.5	06	G72A G72B
R19.6	03	D66A D66B
R19.80	06	G72A G72B
R19.88	06	G72A G72B
R20.0	01	B81A B81B B81C
R20.1	01	B81A B81B B81C
R20.2	01	B81A B81B B81C
R20.3	01	B81A B81B B81C
R20.8	01	B81A B81B B81C
R21	09	J67Z
R22.0	09	J67Z
R22.1	09	J67Z
R22.2	09	J67Z
R22.3	09	J67Z
R22.4	09	J67Z
R22.7	09	J67Z
R22.9	09	J67Z
R23.0	23	Z65A Z65B
R23.1	23	Z65A Z65B
R23.2	23	Z65A Z65B
R23.3	16	Q60A Q60B Q60C
R23.4	09	J67Z
R23.8	09	J67Z
R25.0	01	B81A B81B B81C
R25.1	01	B81A B81B B81C
R25.2	08	I71A I71B
R25.3	01	B81A B81B B81C
R25.8	01	B81A B81B B81C
R26.0	01	B81A B81B B81C
R26.1	01	B81A B81B B81C
R26.2	08	I71A I71B
R26.3	23	Z64A Z64B Z64C

ICD	MDC	DRG
R26.8	01	B81A B81B B81C
R27.0	01	B81A B81B B81C
R27.8	01	B81A B81B B81C
R29.0	10	K62A K62B
R29.1	01	B81A B81B B81C
	15	MSPNG SPNG
R29.2	01	B81A B81B B81C
R29.3	01	B81A B81B B81C
R29.4	08	I71A I71B
R29.5	01	B81A B81B B81C
R29.6	01	B81A B81B B81C
R29.8	01	B81A B81B B81C
R30.0	11	L64A L64B
R30.1	11	L64A L64B
R30.9	11	L64A L64B
R31	11	L64A L64B
R32	11	L64A L64B
R33	11	L64A L64B
R34	11	L60A L60B L60C
		L60D L60E L71Z
R35.0	11	L64A L64B
R35.1	11	L64A L64B
R35.2	11	L64A L64B
R36	11	L64A L64B
R39.0	11	L64A L64B
R39.1	11	L64A L64B
R39.2	11	L64A L64B
R39.8	11	L64A L64B
R40.0	01	B64A B64B
R40.1	01	B64A B64B
R40.2	01	B81A B81B B81C
	15	MSPNG SPNG
R41.0	01	B81A B81B B81C
R41.1	23	Z65A Z65B
R41.2	23	Z65A Z65B
R41.3	23	Z65A Z65B
R41.8	23	Z65A Z65B
R42	03	D61A D61B
R43.0	01	B81A B81B B81C
R43.1	01	B81A B81B B81C
R43.2	01	B81A B81B B81C
R43.8	01	B81A B81B B81C
R44.0	19	U64A U64B
R44.1	02	C63A C63B C63C
R44.2	19	U64A U64B
R44.3	19	U64A U64B
R44.8	19	U64A U64B
R45.0	19	U66A U66B U66C
		U66D
R45.1	19	U66A U66B U66C
		U66D
R45.2	23	Z64A Z64B Z64C
R45.3	23	Z64A Z64B Z64C
R45.4	19	U66A U66B U66C
		U66D
R45.5	23	Z64A Z64B Z64C
R45.6	23	Z64A Z64B Z64C
R45.7	19	U66A U66B U66C
		U66D
R45.8	23	Z64A Z64B Z64C
R46.0	23	Z64A Z64B Z64C
R46.1	23	Z64A Z64B Z64C
R46.2	23	Z64A Z64B Z64C
R46.3	23	Z64A Z64B Z64C
R46.4	23	Z64A Z64B Z64C
R46.5	23	Z64A Z64B Z64C
R46.6	23	Z64A Z64B Z64C
R46.7	23	Z64A Z64B Z64C
R46.8	23	Z64A Z64B Z64C
R47.0	01	B81A B81B B81C

DIAG

ICD	MDC	DRG
R47.1	01	B81A B81B B81C
R47.8	01	B81A B81B B81C
R48.0	19	U66A U66B U66C
		U66D
R48.1	19	U66A U66B U66C
		U66D
R48.2	19	U66A U66B U66C
		U66D
R48.8	19	U66A U66B U66C
		U66D
R49.0	03	D66A D66B
R49.1	03	D66A D66B
R49.2	03	D66A D66B
R49.8	03	D66A D66B
R50.2	18B	T62A T62B T62C
R50.9	18B	T62A T62B T62C
R50.80	18B	T62A T62B T62C
R50.88	18B	T62A T62B T62C
R51	01	B77A B77B
R52.0	23	Z65A Z65B
R52.1	23	Z65A Z65B
R52.2	23	Z65A Z65B
R52.9	23	Z65A Z65B
R53	23	Z65A Z65B
R54	01	B63A B63B
R55	05	F73A F73B
R56.0	01	B75Z
R56.8	01	B81A B81B B81C
	15	MSPNG SPNG
R57.0	Prä	A11C
	05	F62A F62B F62C
		F62D F66A
R57.1	Prä	A11C
	05	F62A
	18B	T01C T60A T60B
		T60C T60D T60E
		T60F T60G T61A
		T86A
R57.2		KP KPP SVB
	05	F62A
	07	H63A
	15	P65B P66B P66C
		P67A P67B P67C
	17	R50A R60A R60B
		R60C R60D R61D
		R62A R62B R63A
		R63B R63C R63D
	18B	T01C T60A T60B
		T60C T60D T60E
		T60F T60G T61A
		T64A T86A
	Prä	A11A A11B A11C
		A11D A93A A97A
		A97B A97C A97D
R57.8	Prä	A11C
	05	F62A
	18B	T01C T60A T60B
		T60C T60D T60E
		T60F T60G T61A
		T86A
R57.9	05	F73A F73B
R58	05	F75A F75B F75C
		F75D
R59.0	16	Q60A Q60B Q60C
R59.1	16	Q60A Q60B Q60C
R59.9	16	Q60A Q60B Q60C
R60.0	23	Z65A Z65B
R60.1	23	Z65A Z65B
R60.9	23	Z65A Z65B
R61.0	09	J67Z

ICD	MDC	DRG
R61.1	09	J67Z
R61.9	09	J67Z
R62.0	10	K62A K62B
R62.8	10	K62A K62B
R62.9	10	K62A K62B
R63.0	10	K62A K62B
R63.1	10	K62A K62B
R63.2	10	K62A K62B
R63.3	10	K62A K62B
R63.4	10	K62A K62B
R63.5	10	K62A K62B
R63.6	10	K62A K62B
R63.8	10	K62A K62B
R64	23	Z65A Z65B
R65.0	Prä	961Z
R65.1	Prä	961Z
R65.2	Prä	961Z
R65.3	Prä	961Z
R65.9	Prä	961Z
R68.0	23	Z65A Z65B
R68.1	23	Z65A Z65B
R68.2	03	D66A D66B
R68.3	04	E75A E75B E75C
R68.8	23	Z65A Z65B
R69	Prä	961Z
R70.0	23	Z65A Z65B
R70.1	23	Z65A Z65B
R71	16	Q61A Q61B Q61C
R72	16	Q60A Q60B Q60C
R73.0	10	K62A K62B
R73.9	10	K62A K62B
R74.0	23	Z65A Z65B
R74.8	23	Z65A Z65B
R74.9	23	Z65A Z65B
R75	Prä	961Z
R76.0	16	Q60A Q60B Q60C
R76.1	04	E77A E77B E77C
R76.2	08	I66A I66B I66C
R76.8	16	Q60A Q60B Q60C
R76.9	16	Q60A Q60B Q60C
R77.0	23	Z65A Z65B
R77.1	23	Z65A Z65B
R77.2	14	O65A O65B O65C
		O65D
R77.9	23	Z65A Z65B
R77.80	12	M64Z
R77.88	23	Z65A Z65B
R78.0	Prä	961Z
R78.1	23	Z65A Z65B
R78.2	23	Z65A Z65B
R78.3	23	Z65A Z65B
R78.4	23	Z65A Z65B
R78.5	23	Z65A Z65B
R78.6	23	Z65A Z65B
R78.7	23	Z65A Z65B
R78.8	23	Z65A Z65B
R78.9	23	Z65A Z65B
R79.0	23	Z65A Z65B
R79.8	23	Z65A Z65B
R79.9	23	Z65A Z65B
R80	11	L64A L64B
R81	10	K60A K60B K60C
		K60D K60E
R82.0	11	L64A L64B
R82.1	23	Z65A Z65B
R82.2	07	H63A H63B H63C
		H63D
R82.3	11	L64A L64B
R82.4	10	K62A K62B
R82.5	11	L64A L64B

ICD	MDC	DRG
R82.6	23	Z65A Z65B
R82.7	11	L64A L64B
R82.8	11	L64A L64B
R82.9	11	L64A L64B
R83.0	01	B81A B81B B81C
R83.1	01	B81A B81B B81C
R83.2	01	B81A B81B B81C
R83.3	01	B81A B81B B81C
R83.4	01	B81A B81B B81C
R83.5	01	B81A B81B B81C
R83.6	01	B81A B81B B81C
R83.7	01	B81A B81B B81C
R83.8	01	B81A B81B B81C
R83.9	01	B81A B81B B81C
R84.0	23	Z65A Z65B
R84.1	23	Z65A Z65B
R84.2	23	Z65A Z65B
R84.3	23	Z65A Z65B
R84.4	23	Z65A Z65B
R84.5	23	Z65A Z65B
R84.6	23	Z65A Z65B
R84.7	23	Z65A Z65B
R84.8	23	Z65A Z65B
R84.9	23	Z65A Z65B
R85.0	06	G72A G72B
R85.1	06	G72A G72B
R85.2	06	G72A G72B
R85.3	06	G72A G72B
R85.4	06	G72A G72B
R85.5	06	G72A G72B
R85.6	06	G72A G72B
R85.7	06	G72A G72B
R85.8	06	G72A G72B
R85.9	06	G72A G72B
R86.0	12	M64Z
R86.1	12	M64Z
R86.2	12	M64Z
R86.3	12	M64Z
R86.4	12	M64Z
R86.5	12	M64Z
R86.6	12	M64Z
R86.7	12	M64Z
R86.8	12	M64Z
R86.9	12	M64Z
R87.0	23	Z65A Z65B
R87.1	23	Z65A Z65B
R87.2	23	Z65A Z65B
R87.3	23	Z65A Z65B
R87.4	23	Z65A Z65B
R87.5	23	Z65A Z65B
R87.6	13	N62B
R87.7	23	Z65A Z65B
R87.8	23	Z65A Z65B
R87.9	23	Z65A Z65B
R89.0	23	Z65A Z65B
R89.1	23	Z65A Z65B
R89.2	23	Z65A Z65B
R89.3	23	Z65A Z65B
R89.4	23	Z65A Z65B
R89.5	23	Z65A Z65B
R89.6	23	Z65A Z65B
R89.7	23	Z65A Z65B
R89.8	23	Z65A Z65B
R89.9	23	Z65A Z65B
R90.0	01	B81A B81B B81C
R90.8	01	B81A B81B B81C
R91	04	E75A E75B E75C
R92	09	J67Z
R93.0	01	B81A B81B B81C
R93.1	05	F66A F66B

ICD	MDC	DRG
R93.2	07	H64A H64B H64C
R93.3	06	G72A G72B
R93.4	11	L64A L64B
R93.5	06	G72A G72B
R93.6	08	I76A I76B
R93.7	08	I76A I76B
R93.8	23	Z65A Z65B
R94.0	01	B81A B81B B81C
	15	P65B P66B P66C
		P67A P67B P67C
R94.1	01	B81A B81B B81C
R94.2	04	E75A E75B E75C
R94.3	05	F75A F75B F75C
		F75D
R94.4	11	L64A L64B
R94.5	07	H63A H63B H63C
		H63D
R94.6	10	K09A K09B K64A
		K64B K64C
R94.7	10	K09A K09B K64A
		K64B K64C
R94.8	11	L64A L64B
R95.0	01	B81A B81B B81C
	15	P65B P66B P66C
		P67A P67B P67C
R95.9	01	B81A B81B B81C
	15	P65B P66B P66C
		P67A P67B P67C
R96.0	Prä	961Z
R96.1	Prä	961Z
R98	Prä	961Z
R99	Prä	961Z
S00.00	21B	X60A X60B X60C
S00.01	21B	X60A X60B X60C
S00.1	Prä	A95C
	02	C62Z
	21A	W61A W61B W61C
S00.02	Prä	A95C
	09	J67Z
	21A	W61A W61B W61C
S00.03	Prä	A95C
	09	J67Z
	21A	W61A W61B W61C
S00.04	Prä	A95C
	09	J65Z
	21A	W61A W61B W61C
S00.05	21B	X60A X60B X60C
S00.7	Prä	A95C
	09	J65Z
	21A	W61A W61B W61C
S00.08	21B	X60A X60B X60C
S00.20	Prä	A95C
	02	C62Z
	21A	W61A W61B W61C
S00.21	Prä	A95C
	02	C62Z
	21A	W61A W61B W61C
S00.22	Prä	A95C
	02	C62Z
	21A	W61A W61B W61C
S00.23	Prä	A95C
	02	C62Z
	21A	W61A W61B W61C
S00.24	Prä	A95C
	02	C62Z
	21A	W61A W61B W61C
S00.28	Prä	A95C
	02	C62Z
	21A	W61A W61B W61C
S00.30	Prä	A95C
	09	J65Z
	21A	W61A W61B W61C
S00.31	Prä	A95C
	09	J65Z
	21A	W61A W61B W61C
S00.32	Prä	A95C
	09	J67Z
	21A	W61A W61B W61C
S00.33	Prä	A95C
	09	J67Z
	21A	W61A W61B W61C
S00.34	Prä	A95C
	09	J65Z
	21A	W61A W61B W61C
S00.35	Prä	A95C
	09	J65Z
	21A	W61A W61B W61C
S00.38	Prä	A95C
	09	J65Z
	21A	W61A W61B W61C
S00.40	Prä	A95C
	09	J65Z
	21A	W61A W61B W61C
S00.41	Prä	A95C
	09	J65Z
	21A	W61A W61B W61C
S00.42	Prä	A95C
	09	J67Z
	21A	W61A W61B W61C
S00.43	Prä	A95C
	09	J67Z
	21A	W61A W61B W61C
S00.44	Prä	A95C
	09	J65Z
	21A	W61A W61B W61C
S00.45	Prä	A95C
	09	J65Z
	21A	W61A W61B W61C
S00.48	Prä	A95C
	09	J65Z
	21A	W61A W61B W61C
S00.50	Prä	A95C
	09	J65Z
	21A	W61A W61B W61C
S00.51	Prä	A95C
	09	J65Z
	21A	W61A W61B W61C
S00.52	Prä	A95C
	09	J67Z
	21A	W61A W61B W61C
S00.53	Prä	A95C
	09	J67Z
	21A	W61A W61B W61C
S00.54	Prä	A95C
	09	J65Z
	21A	W61A W61B W61C
S00.55	Prä	A95C
	09	J65Z
	21A	W61A W61B W61C
S00.58	Prä	A95C
	09	J65Z
	21A	W61A W61B W61C
S00.80	Prä	A95C
	09	J65Z
	21A	W61A W61B W61C
S00.81	Prä	A95C
	09	J65Z
	15	P65B P66B P66C
		P67A P67B P67C
	21A	W61A W61B W61C
S00.82	Prä	A95C
	09	J67Z
	21A	W61A W61B W61C
S00.83	Prä	A95C
	09	J67Z
	21A	W61A W61B W61C
S00.84	Prä	A95C
	09	J65Z
	21A	W61A W61B W61C
S00.85	Prä	A95C
	09	J65Z
	15	P65B P66B P66C
		P67A P67B P67C
	21A	W61A W61B W61C
S00.88	Prä	A95C
	09	J65Z
	21A	W61A W61B W61C
S00.90	Prä	A95C
	09	J65Z
	21A	W61A W61B W61C
S00.91	Prä	A95C
	09	J65Z
	21A	W61A W61B W61C
S00.92	Prä	A95C
	09	J67Z
	21A	W61A W61B W61C
S00.93	Prä	A95C
	09	J67Z
	21A	W61A W61B W61C
S00.94	Prä	A95C
	09	J65Z
	21A	W61A W61B W61C
S00.95	Prä	A95C
	09	J65Z
	15	P65B P66B P66C
		P67A P67B P67C
	21A	W61A W61B W61C
S00.98	Prä	A95C
	09	J65Z
	21A	W61A W61B W61C
S01.0	Prä	A95C
	21A	W61A W61B W61C
	21B	X60A X60B X60C
S01.1	Prä	A95C
	02	C62Z
	21A	W61A W61B W61C
S01.7	Prä	A95C
	21A	W61A W61B W61C
	21B	X60A X60B X60C
S01.9	Prä	A95C
	21A	W61A W61B W61C
	21B	X60A X60B X60C
S01.20	Prä	A95C
	03	D65Z
	21A	W61A W61B W61C
S01.21	Prä	A95C
	03	D65Z
	21A	W61A W61B W61C
S01.22	Prä	A95C
	03	D65Z
	21A	W61A W61B W61C
S01.23	Prä	A95C
	03	D66A D66B
	21A	W61A W61B W61C
S01.29	Prä	A95C
	03	D66A D66B
	21A	W61A W61B W61C
S01.30	Prä	A95C
	03	D66A D66B
	21A	W61A W61B W61C

DIAG

ICD	MDC	DRG
S01.31	Prä	A95C
	03	D66A D66B
	21A	W61A W61B W61C
S01.33	Prä	A95C
	03	D66A D66B
	21A	W61A W61B W61C
S01.34	Prä	A95C
	03	D66A D66B
	21A	W61A W61B W61C
S01.35	03	D66A D66B
	15	MSPNG SPNG
	21A	W61A W61B W61C
	Prä	A95C
S01.36	03	D66A D66B
	15	MSPNG SPNG
	21A	W61A W61B W61C
	Prä	A95C
S01.37	03	D66A D66B
	15	MSPNG SPNG
	21A	W61A W61B W61C
	Prä	A95C
S01.38	03	D66A D66B
	15	MSPNG SPNG
	21A	W61A W61B W61C
	Prä	A95C
S01.39	03	D66A D66B
	15	MSPNG SPNG
	21A	W61A W61B W61C
	Prä	A95C
S01.41	Prä	A95C
	21A	W61A W61B W61C
	21B	X60A X60B X60C
S01.42	Prä	A95C
	03	D40Z D67A D67B
	21A	W61A W61B W61C
S01.43	Prä	A95C
	03	D40Z D67A D67B
	21A	W61A W61B W61C
S01.49	Prä	A95C
	21A	W61A W61B W61C
	21B	X60A X60B X60C
S01.50	03	D40Z D67A D67B
	15	MSPNG SPNG
	21A	W61A W61B W61C
	Prä	A95C
S01.51	Prä	A95C
	03	D40Z D67A D67B
	21A	W61A W61B W61C
S01.52	03	D40Z D67A D67B
	15	MSPNG SPNG
	21A	W61A W61B W61C
	Prä	A95C
S01.53	03	D40Z D67A D67B
	15	MSPNG SPNG
	21A	W61A W61B W61C
	Prä	A95C
S01.54	03	D40Z D67A D67B
	15	MSPNG SPNG
	21A	W61A W61B W61C
	Prä	A95C
S01.55	03	D40Z D67A D67B
	15	MSPNG SPNG
	21A	W61A W61B W61C
	Prä	A95C
S01.59	03	D40Z D67A D67B
	15	MSPNG SPNG
	21A	W61A W61B W61C
	Prä	A95C
S01.80	Prä	A95C
	21A	W61A W61B W61C

ICD	MDC	DRG
	21B	X60A X60B X60C
S01.83		PTR
	08	I02A I02B I02C
		I08A I08B I13A
		I13B I20A I20C
		I20D I22Z I32C
	21A	W61A W61B W61C
	21B	X01A X07A X07B
	Prä	961Z A95C
S01.84	Prä	961Z A95C
	21A	W61A W61B W61C
S01.85	Prä	961Z A95C
	21A	W61A W61B W61C
S01.86	Prä	961Z A95C
	08	I02A I02B I02C
		I08A I08B I13A
		I13B I20A I20C
		I20D I22Z I32C
	21A	W61A W61B W61C
	21B	X01A X07A X07B
S01.87	Prä	961Z A95C
	21A	W61A W61B W61C
S01.88		PTR
	08	I02A I02B I02C
		I08A I08B I13A
		I13B I20A I20C
		I20D I22Z I32C
	21A	W61A W61B W61C
	21B	X01A X07A X07B
	Prä	961Z A95C
S01.89		PTR
	08	I02A I02B I02C
		I08A I08B I13A
		I13B I20A I20C
		I20D I22Z I32C
	21A	W61A W61B W61C
	21B	X01A X07A X07B
	Prä	961Z A95C
S02.0		PTR
	01	B79Z B86B
	15	MSPNG SPNG
	21A	W61A W61B W61C
	Prä	A95C
S02.1		PTR
	01	B79Z B86B
	15	MSPNG SPNG
	21A	W61A W61B
	Prä	A11C A95C
S02.2	03	D65Z
	15	MSPNG SPNG
	21A	W61A W61B W61C
	Prä	A95C
S02.3		PTR
	01	B79Z B86B
	15	MSPNG SPNG
	21A	W61A W61B W61C
	Prä	A11C A95C
S02.4		PTR
	03	D40Z D67A D67B
	15	MSPNG SPNG
	21A	W61A W61B W61C
	Prä	A95C
S02.5		PTR
	03	D40Z D67A D67B
	21A	W61A W61B W61C
	Prä	A95C
S02.7		PTR
	01	B79Z B86B
	21A	W61A W61B W61C
	Prä	A95C

ICD	MDC	DRG
S02.8	Prä	A95C
	01	B79Z B86B
	21A	W61A W61B W61C
S02.9	Prä	A95C
	01	B81A B81B B81C
	21A	W61A W61B W61C
S02.60		PTR
	03	D40Z D67A D67B
	15	MSPNG SPNG
	21A	W61A W61B W61C
	Prä	A95C
S02.61		PTR
	03	D40Z D67A D67B
	15	MSPNG SPNG
	21A	W61A W61B W61C
	Prä	A95C
S02.62		PTR
	03	D40Z D67A D67B
	15	MSPNG SPNG
	21A	W61A W61B W61C
	Prä	A95C
S02.63		PTR
	03	D40Z D67A D67B
	15	MSPNG SPNG
	21A	W61A W61B W61C
	Prä	A95C
S02.64		PTR
	03	D40Z D67A D67B
	15	MSPNG SPNG
	21A	W61A W61B W61C
	Prä	A95C
S02.65		PTR
	03	D40Z D67A D67B
	15	MSPNG SPNG
	21A	W61A W61B W61C
	Prä	A95C
S02.66		PTR
	03	D40Z D67A D67B
	15	MSPNG SPNG
	21A	W61A W61B W61C
	Prä	A95C
S02.67		PTR
	03	D40Z D67A D67B
	15	MSPNG SPNG
	21A	W61A W61B W61C
	Prä	A95C
S02.68		PTR
	03	D40Z D67A D67B
	15	MSPNG SPNG
	21A	W61A W61B W61C
	Prä	A95C
S02.69		PTR
	03	D40Z D67A D67B
	15	MSPNG SPNG
	21A	W61A W61B W61C
	Prä	A95C
S03.0		PTR
	03	D40Z D67A D67B
	21A	W61A W61B W61C
	Prä	A95C
S03.1	Prä	A95C
	08	I76A I76B
	21A	W61A W61B W61C
S03.2	Prä	A95C
	03	D40Z D67A D67B
	21A	W61A W61B W61C
S03.3	Prä	A95C
	08	I76A I76B
	21A	W61A W61B W61C
S03.4	Prä	A95C

ICD	MDC	DRG
	03	D40Z D67A D67B
	21A	W61A W61B W61C
S03.5	Prä	A95C
	08	I76A I76B
	21A	W61A W61B W61C
S04.0		PTR
	01	B81A B81B B81C
	21A	W61A W61B W61C
	Prä	A95C
S04.1		PTR
	01	B71A B71B B71C
	21A	W61A W61B W61C
	Prä	A95C
S04.2		PTR
	01	B71A B71B B71C
	21A	W61A W61B W61C
	Prä	A95C
S04.3		PTR
	01	B71A B71B B71C
	21A	W61A W61B W61C
	Prä	A95C
S04.4		PTR
	01	B71A B71B B71C
	21A	W61A W61B W61C
	Prä	A95C
S04.5		PTR
	01	B71A B71B B71C
	21A	W61A W61B W61C
	Prä	A95C
S04.6		PTR
	03	D66A D66B
	21A	W61A W61B W61C
	Prä	A95C
S04.7		PTR
	01	B71A B71B B71C
	21A	W61A W61B W61C
	Prä	A95C
S04.8		PTR
	01	B71A B71B B71C
	21A	W61A W61B W61C
	Prä	A95C
S04.9		PTR
	01	B71A B71B B71C
		B81A B81B B81C
	21A	W61A W61B W61C
	Prä	A95C
S05.0		PTR
	02	C62Z
	21A	W61A W61B W61C
	Prä	A95C
S05.1	Prä	A95C
	02	C62Z
	21A	W61A W61B W61C
S05.2		PTR
	02	C01Z C63A C63B
		C63C
	15	MSPNG SPNG
	21A	W61A W61B W61C
	Prä	A95C
S05.3		PTR
	02	C01Z C63A C63B
		C63C
	15	MSPNG SPNG
	21A	W61A W61B W61C
	Prä	A95C
S05.4		PTR
	02	C63A C63B C63C
	15	MSPNG SPNG
	21A	W61A W61B W61C
	Prä	A95C
S05.5		PTR
	02	C01Z C63A C63B
		C63C
	15	MSPNG SPNG
	21A	W61A W61B W61C
	Prä	A95C
S05.6		PTR
	02	C01Z C63A C63B
		C63C
	15	MSPNG SPNG
	21A	W61A W61B W61C
	Prä	A95C
S05.7		PTR
	02	C01Z C63A C63B
		C63C
	15	MSPNG SPNG
	21A	W61A W61B W61C
	Prä	A95C
S05.8	02	C62Z
	15	MSPNG SPNG
	21A	W61A W61B W61C
	Prä	A95C
S05.9	Prä	A95C
	02	C62Z
	21A	W61A W61B W61C
S06.0	01	B80A B80B
	15	MSPNG SPNG
S06.1		PTR
	01	B78A B78B B86B
	15	MSPNG SPNG
	21A	W61A W61B W61C
	Prä	A11C A95C
S06.4		PTR
	01	B78A B78B B86B
	15	MSPNG SPNG
	21A	W61A W61B W61C
	Prä	A11C A95C
S06.5		PTR
	01	B78A B78B B86B
	15	MSPNG SPNG
	21A	W61A W61B W61C
	Prä	A11C A95C
S06.6		PTR
	01	B78A B78B B86B
	15	MSPNG SPNG
	21A	W61A W61B
	Prä	A11C A95C
S06.8		PTR
	01	B78A B78B B86B
	15	MSPNG SPNG
	21A	W61A W61B W61C
	Prä	A95C
S06.9	01	B81A B81B B81C
	15	MSPNG SPNG
S06.20		PTR
	01	B81A B81B B81C
	15	MSPNG SPNG
	21A	W61A W61B W61C
	Prä	A11C A95C
S06.21		PTR
	01	B78A B78B B86B
	15	MSPNG SPNG
	21A	W61A W61B W61C
	Prä	A11C A95C
S06.22		PTR
	01	B78A B78B B86B
	15	MSPNG SPNG
	21A	W61A W61B W61C
	Prä	A11C A95C
S06.23		PTR
	01	B78A B78B B86B
	15	MSPNG SPNG
	21A	W61A W61B W61C
	Prä	A11C A95C
S06.28		PTR
	01	B78A B78B B86B
	15	MSPNG SPNG
	21A	W61A W61B W61C
	Prä	A11C A95C
S06.30		PTR
	01	B81A B81B B81C
	15	MSPNG SPNG
	21A	W61A W61B W61C
	Prä	A11C A95C
S06.31		PTR
	01	B78A B78B B86B
	15	MSPNG SPNG
	21A	W61A W61B W61C
	Prä	A11C A95C
S06.32		PTR
	01	B78A B78B B86B
	15	MSPNG SPNG
	21A	W61A W61B W61C
	Prä	A11C A95C
S06.33		PTR
	01	B78A B78B B86B
	15	MSPNG SPNG
	21A	W61A W61B W61C
	Prä	A11C A95C
S06.34		PTR
	01	B78A B78B B86B
	15	MSPNG SPNG
	21A	W61A W61B W61C
	Prä	A11C A95C
S06.38		PTR
	01	B78A B78B B86B
	15	MSPNG SPNG
	21A	W61A W61B W61C
	Prä	A11C A95C
S06.70	15	MSPNG SPNG
	Prä	961Z
S06.71	15	MSPNG SPNG
	Prä	961Z
S06.72		PTR
	15	MSPNG SPNG
	Prä	961Z
S06.73	Prä	961Z
S06.79	15	MSPNG SPNG
	Prä	961Z
S07.0		PTR
	15	MSPNG SPNG
	21A	W61A W61B W61C
	21B	X60A X60B X60C
	Prä	A95C
S07.1		PTR
	15	MSPNG SPNG
	21A	W61A W61B W61C
	21B	X60A X60B X60C
	Prä	A95C
S07.8		PTR
	15	MSPNG SPNG
	21A	W61A W61B W61C
	21B	X60A X60B X60C
	Prä	A95C
S07.9		PTR
	15	MSPNG SPNG
	21A	W61A W61B W61C
	21B	X60A X60B X60C
	Prä	A95C
S08.0		PTR

DIAG

ICD	MDC	DRG
	21A	W61A W61B W61C
	21B	X60A X60B X60C
	Prä	A95C
S08.1		PTR
	03	D66A D66B
	21A	W61A W61B W61C
	Prä	A95C
S08.8		PTR
	21A	W61A W61B W61C
	21B	X60A X60B X60C
	Prä	A95C
S08.9		PTR
	21A	W61A W61B W61C
	21B	X60A X60B X60C
	Prä	A95C
S09.0	Prä	A95C
	21A	W61A W61B W61C
	21B	X60A X60B X60C
S09.1	Prä	A95C
	08	I76A I76B
	21A	W61A W61B W61C
S09.2	03	D66A D66B
	15	MSPNG SPNG
	21A	W61A W61B W61C
	Prä	A95C
S09.7		PTR
	21A	W61A W61B W61C
	21B	X60A X60B X60C
	Prä	A95C
S09.8	21B	X60A X60B X60C
S09.9	15	MSPNG SPNG
	21B	X60A X60B X60C
S10.0	21B	X60A X60B X60C
S10.7		PTR
	09	J65Z
	21A	W61A W61B W61C
	Prä	A95C
S10.10	21B	X60A X60B X60C
S10.11	21B	X60A X60B X60C
S10.12		PTR
	09	J67Z
	21A	W61A W61B W61C
	Prä	A95C
S10.13		PTR
	09	J67Z
	21A	W61A W61B W61C
	Prä	A95C
S10.14		PTR
	09	J65Z
	21A	W61A W61B W61C
	Prä	A95C
S10.18	21B	X60A X60B X60C
S10.80	21B	X60A X60B X60C
S10.81	21B	X60A X60B X60C
S10.82		PTR
	09	J67Z
	21A	W61A W61B W61C
	Prä	A95C
S10.83		PTR
	09	J67Z
	21A	W61A W61B W61C
	Prä	A95C
S10.84		PTR
	09	J65Z
	21A	W61A W61B W61C
	Prä	A95C
S10.85	21B	X60A X60B X60C
S10.86	21B	X60A X60B X60C
S10.88	21B	X60A X60B X60C
S10.90	21B	X60A X60B X60C

ICD	MDC	DRG
S10.91	21B	X60A X60B X60C
S10.92		PTR
	09	J67Z
	21A	W61A W61B W61C
	Prä	A95C
S10.93		PTR
	09	J67Z
	21A	W61A W61B W61C
	Prä	A95C
S10.94		PTR
	09	J65Z
	21A	W61A W61B W61C
	Prä	A95C
S10.95	21B	X60A X60B X60C
S10.96	21B	X60A X60B X60C
S10.98	21B	X60A X60B X60C
S11.01		PTR
	03	D66A D66B
	15	MSPNG SPNG
	21A	W61A W61B W61C
	Prä	A95C
S11.1		PTR
	10	K09A K09B K64A
		K64B K64C
	15	MSPNG SPNG
	21A	W61A W61B W61C
	Prä	A95C
S11.02		PTR
	04	E66A E66B
	15	MSPNG SPNG
	21A	W61A W61B W61C
	Prä	A95C
S11.7		PTR
	21A	W61A W61B W61C
	21B	X60A X60B X60C
	Prä	A95C
S11.9		PTR
	21A	W61A W61B W61C
	21B	X60A X60B X60C
	Prä	A95C
S11.21		PTR
	03	D66A D66B
	15	MSPNG SPNG
	21A	W61A W61B W61C
	Prä	A95C
S11.22		PTR
	03	D66A D66B
	15	MSPNG SPNG
	21A	W61A W61B W61C
	Prä	A95C
S11.80		PTR
	21A	W61A W61B W61C
	21B	X60A X60B X60C
	Prä	A95C
S11.84	Prä	961Z A95C
	21A	W61A W61B W61C
S11.85	Prä	961Z A95C
	21A	W61A W61B W61C
S11.86	Prä	961Z A95C
	08	I02A I02B I02C
		I08A I08B I13A
		I13B I20A I20C
		I20D I22Z I32C
	21A	W61A W61B W61C
	21B	X01A X07A X07B
S11.87		PTR
	21A	W61A W61B W61C
	Prä	961Z A95C
S11.88		PTR
	08	I02A I02B I02C

ICD	MDC	DRG
		I08A I08B I13A
		I13B I20A I20C
		I20D I22Z I32C
	21A	W61A W61B W61C
	21B	X01A X07A X07B
	Prä	961Z A95C
S11.89		PTR
	08	I02A I02B I02C
		I08A I08B I13A
		I13B I20A I20C
		I20D I22Z I32C
	21A	W61A W61B W61C
	21B	X01A X07A X07B
	Prä	961Z A95C
S12.0		PTR
	04	E66A
	08	I10B I68A I68B
		I68C I68D
	15	MSPNG SPNG
	21A	W61A W61B
	Prä	A11C A95C
S12.1		PTR
	04	E66A
	08	I10B I68A I68B
		I68C I68D
	15	MSPNG SPNG
	21A	W61A W61B
	Prä	A11C A95C
S12.7		PTR
	04	E66A
	08	I10B I68A I68B
		I68C I68D
	15	MSPNG SPNG
	21A	W61A W61B W61C
	Prä	A11C A95C
S12.8		PTR
	03	D66A D66B
	15	MSPNG SPNG
	21A	W61A W61B W61C
	Prä	A95C
S12.9		PTR
	08	I68A I68B I68C
		I68D
	15	MSPNG SPNG
	21A	W61A W61B W61C
	Prä	A11C A95C
S12.21		PTR
	04	E66A
	08	I10B I68A I68B
		I68C I68D
	15	MSPNG SPNG
	21A	W61A W61B W61C
	Prä	A11C A95C
S12.22		PTR
	04	E66A
	08	I10B I68A I68B
		I68C I68D
	15	MSPNG SPNG
	21A	W61A W61B W61C
	Prä	A11C A95C
S12.23		PTR
	04	E66A
	08	I10B I68A I68B
		I68C I68D
	15	MSPNG SPNG
	21A	W61A W61B W61C
	Prä	A11C A95C
S12.24		PTR
	04	E66A
	08	I10B I68A I68B

ICD	MDC	DRG
		I68C I68D
	15	MSPNG SPNG
	21A	W61A W61B W61C
	Prä	A11C A95C
S12.25		PTR
	04	E66A
	08	I10B I68A I68B
		I68C I68D
	15	MSPNG SPNG
	21A	W61A W61B W61C
	Prä	A11C A95C
S13.0		PTR
	08	I68A I68B I68C
		I68D
	15	MSPNG SPNG
	21A	W61A W61B W61C
	Prä	A95C
S13.2		PTR
	08	I68A I68B I68C
		I68D
	15	MSPNG SPNG
	21A	W61A W61B W61C
	Prä	A95C
S13.3		PTR
	08	I68A I68B I68C
		I68D
	15	MSPNG SPNG
	21A	W61A W61B W61C
	Prä	A95C
S13.4		PTR
	08	I68A I68B I68C
		I68D
	21A	W61A W61B W61C
	Prä	A95C
S13.5		PTR
	08	I76A I76B
	21A	W61A W61B W61C
	Prä	A95C
S13.6		PTR
	08	I68A I68B I68C
		I68D
	21A	W61A W61B W61C
	Prä	A95C
S13.10		PTR
	08	I68A I68B I68C
		I68D
	15	MSPNG SPNG
	21A	W61A W61B W61C
	Prä	A95C
S13.11		PTR
	08	I68A I68B I68C
		I68D
	15	MSPNG SPNG
	21A	W61A W61B W61C
	Prä	A11C A95C
S13.12		PTR
	08	I68A I68B I68C
		I68D
	15	MSPNG SPNG
	21A	W61A W61B W61C
	Prä	A11C A95C
S13.13		PTR
	08	I68A I68B I68C
		I68D
	15	MSPNG SPNG
	21A	W61A W61B W61C
	Prä	A11C A95C
S13.14		PTR
	08	I68A I68B I68C
		I68D
	15	MSPNG SPNG
	21A	W61A W61B W61C
	Prä	A11C A95C
S13.15		PTR
	08	I68A I68B I68C
		I68D
	15	MSPNG SPNG
	21A	W61A W61B W61C
	Prä	A11C A95C
S13.16		PTR
	08	I68A I68B I68C
		I68D
	15	MSPNG SPNG
	21A	W61A W61B W61C
	Prä	A11C A95C
S13.17		PTR
	08	I68A I68B I68C
		I68D
	15	MSPNG SPNG
	21A	W61A W61B W61C
	Prä	A11C A95C
S13.18		PTR
	08	I68A I68B I68C
		I68D
	15	MSPNG SPNG
	21A	W61A W61B W61C
	Prä	A95C
S14.0		PTR
	01	B60A B60B
	15	MSPNG SPNG
	21A	W61A W61B W61C
	Prä	A95C B61A B61B
		B61C B61D B61E
S14.2		PTR
	01	B71A B71B B71C
	15	MSPNG SPNG
	21A	W61A W61B W61C
	Prä	A95C
S14.3		PTR
	01	B71A B71B B71C
	15	MSPNG SPNG
	21A	W61A W61B W61C
	Prä	A95C
S14.4		PTR
	01	B71A B71B B71C
	21A	W61A W61B W61C
	Prä	A95C
S14.5		PTR
	01	B71A B71B B71C
	15	MSPNG SPNG
	21A	W61A W61B W61C
	Prä	A95C
S14.6		PTR
	01	B71A B71B B71C
		B81A B81B B81C
	21A	W61A W61B W61C
	Prä	A95C
S14.10		PTR
	01	B60A B60B
	15	MSPNG SPNG
	21A	W61A W61B W61C
	Prä	A95C B61A B61B
		B61C B61D B61E
S14.11		PTR
	01	B60A B60B
	15	MSPNG SPNG
	21A	W61A W61B W61C
	Prä	A95C B61A B61B
		B61C B61D B61E
S14.12		PTR
	01	B60A B60B
	15	MSPNG SPNG
	21A	W61A W61B W61C
	Prä	A46B A95C B61A
		B61B B61C B61D
		B61E
S14.13		PTR
	01	B60A B60B
	15	MSPNG SPNG
	21A	W61A W61B W61C
	Prä	A95C B61A B61B
		B61C B61D B61E
S14.70		PTR
	15	MSPNG SPNG
	21A	W61A W61B W61C
	Prä	961Z A95C
S14.71		PTR
	15	MSPNG SPNG
	21A	W61A W61B W61C
	Prä	961Z A46B A95C
S14.72		PTR
	15	MSPNG SPNG
	21A	W61A W61B W61C
	Prä	961Z A46B A95C
S14.73		PTR
	15	MSPNG SPNG
	21A	W61A W61B W61C
	Prä	961Z A46B A95C
S14.74		PTR
	15	MSPNG SPNG
	21A	W61A W61B W61C
	Prä	961Z A46B A95C
S14.75		PTR
	15	MSPNG SPNG
	21A	W61A W61B W61C
	Prä	961Z A46B A95C
S14.76		PTR
	15	MSPNG SPNG
	21A	W61A W61B W61C
	Prä	961Z A46B A95C
S14.77		PTR
	15	MSPNG SPNG
	21A	W61A W61B W61C
	Prä	961Z A46B A95C
S14.78		PTR
	15	MSPNG SPNG
	21A	W61A W61B W61C
	Prä	961Z A46B A95C
S15.00		PTR
	15	MSPNG SPNG
	21A	W61A W61B W61C
	21B	X60A X60B X60C
	Prä	A95C
S15.01		PTR
	15	MSPNG SPNG
	21A	W61A W61B W61C
	21B	X60A X60B X60C
	Prä	A95C
S15.1		PTR
	21A	W61A W61B W61C
	21B	X60A X60B X60C
	Prä	A95C
S15.02		PTR
	15	MSPNG SPNG
	21A	W61A W61B W61C
	21B	X60A X60B X60C
	Prä	A95C
S15.2		PTR
	21A	W61A W61B W61C
	21B	X60A X60B X60C

DIAG

ICD	MDC	DRG
	Prä	A95C
S15.03		PTR
	15	MSPNG SPNG
	21A	W61A W61B W61C
	21B	X60A X60B X60C
	Prä	A95C
S15.3		PTR
	15	MSPNG SPNG
	21A	W61A W61B W61C
	21B	X60A X60B X60C
	Prä	A95C
S15.7		PTR
	21A	W61A W61B W61C
	21B	X60A X60B X60C
	Prä	A95C
S15.9		PTR
	21A	W61A W61B W61C
	21B	X60A X60B X60C
	Prä	A95C
S15.80		PTR
	01	B81A B81B B81C
	15	MSPNG SPNG
S15.81		PTR
	01	B81A B81B B81C
	15	MSPNG SPNG
S15.82		PTR
	01	B81A B81B B81C
	15	MSPNG SPNG
S15.88		PTR
	21A	W61A W61B W61C
	21B	X60A X60B X60C
	Prä	A95C
S16		PTR
	08	I68A I68B I68C
		I68D
	21A	W61A W61B W61C
	Prä	A95C
S17.0		PTR
	15	MSPNG SPNG
	21A	W61A W61B W61C
	21B	X60A X60B X60C
	Prä	A95C
S17.8		PTR
	15	MSPNG SPNG
	21A	W61A W61B W61C
	21B	X60A X60B X60C
	Prä	A95C
S17.9		PTR
	15	MSPNG SPNG
	21A	W61A W61B W61C
	21B	X60A X60B X60C
	Prä	A95C
S18		PTR
	21A	W61A W61B W61C
	21B	X60A X60B X60C
	Prä	A95C
S19.7		PTR
	21A	W61A W61B W61C
	21B	X60A X60B X60C
	Prä	A95C
S19.9	21B	X60A X60B X60C
S19.80	01	B81A B81B B81C
	15	MSPNG SPNG
S19.88	21B	X60A X60B X60C
S20.0	21B	X60A X60B X60C
S20.2	21B	X60A X60B X60C
S20.7	21B	X60A X60B X60C
S20.10	21B	X60A X60B X60C
S20.11	21B	X60A X60B X60C
S20.12		PTR
	09	J67Z
	21A	W61A W61B W61C
	Prä	A95C
S20.13		PTR
	09	J67Z
	21A	W61A W61B W61C
	Prä	A95C
S20.14		PTR
	09	J65Z
	21A	W61A W61B W61C
	Prä	A95C
S20.16	21B	X60A X60B X60C
S20.18	21B	X60A X60B X60C
S20.30	21B	X60A X60B X60C
S20.31	21B	X60A X60B X60C
S20.32		PTR
	09	J67Z
	21A	W61A W61B W61C
	Prä	A95C
S20.33		PTR
	09	J67Z
	21A	W61A W61B W61C
	Prä	A95C
S20.34		PTR
	09	J65Z
	21A	W61A W61B W61C
	Prä	A95C
S20.36	21B	X60A X60B X60C
S20.38	21B	X60A X60B X60C
S20.40	21B	X60A X60B X60C
S20.41	21B	X60A X60B X60C
S20.42		PTR
	09	J67Z
	21A	W61A W61B W61C
	Prä	A95C
S20.43		PTR
	09	J67Z
	21A	W61A W61B W61C
	Prä	A95C
S20.44		PTR
	09	J65Z
	21A	W61A W61B W61C
	Prä	A95C
S20.46	21B	X60A X60B X60C
S20.48	21B	X60A X60B X60C
S20.80	21B	X60A X60B X60C
S20.81	21B	X60A X60B X60C
S20.82		PTR
	09	J67Z
	21A	W61A W61B W61C
	Prä	A95C
S20.83		PTR
	09	J67Z
	21A	W61A W61B W61C
	Prä	A95C
S20.84		PTR
	09	J65Z
	21A	W61A W61B W61C
	Prä	A95C
S20.86	21B	X60A X60B X60C
S20.88	21B	X60A X60B X60C
S21.0		PTR
	21A	W61A W61B W61C
	21B	X60A X60B X60C
	Prä	A95C
S21.1		PTR
	15	MSPNG SPNG
	21A	W61A W61B W61C
	21B	X60A X60B X60C
	Prä	A95C
S21.2		PTR
	15	MSPNG SPNG
	21A	W61A W61B W61C
	21B	X60A X60B X60C
	Prä	A95C
S21.7		PTR
	15	MSPNG SPNG
	21A	W61A W61B W61C
	21B	X60A X60B X60C
	Prä	A95C
S21.9		PTR
	15	MSPNG SPNG
	21A	W61A W61B W61C
	21B	X60A X60B X60C
	Prä	A95C
S21.80		PTR
	15	MSPNG SPNG
	21A	W61A W61B W61C
	21B	X60A X60B X60C
	Prä	A95C
S21.83		PTR
	08	I02A I02B I02C
		I08A I08B I13A
		I13B I20A I20C
		I20D I22Z I32C
	15	MSPNG SPNG
	21A	W61A W61B W61C
	21B	X01A X07A X07B
	Prä	961Z A95C
S21.84	Prä	961Z A95C
	21A	W61A W61B W61C
S21.85	Prä	961Z A95C
	21A	W61A W61B W61C
S21.86	Prä	961Z A95C
	04	E66A
	08	I02A I02B I02C
		I08A I08B I13A
		I13B I20A I20C
		I20D I22Z I32C
	21A	W61A W61B W61C
	21B	X01A X07A X07B
S21.87		PTR
	15	MSPNG SPNG
	21A	W61A W61B W61C
	Prä	961Z A95C
S21.88		PTR
	08	I02A I02B I02C
		I08A I08B I13A
		I13B I20A I20C
		I20D I22Z I32C
	15	MSPNG SPNG
	21A	W61A W61B W61C
	21B	X01A X07A X07B
	Prä	961Z A95C
S21.89		PTR
	08	I02A I02B I02C
		I08A I08B I13A
		I13B I20A I20C
		I20D I22Z I32C
	15	MSPNG SPNG
	21A	W61A W61B W61C
	21B	X01A X07A X07B
	Prä	961Z A95C
S22.00		PTR
	04	E66A
	08	I68A I68B I68C
		I68D
	15	MSPNG SPNG
	21A	W61A W61B W61C
	Prä	A95C

ICD	MDC	DRG
S22.01		PTR
	04	E66A
	08	I10B I68A I68B I68C I68D
	15	MSPNG SPNG
	21A	W61A W61B W61C
	Prä	A95C
S22.1		PTR
	04	E66A
	08	I10B I68A I68B I68C I68D
	15	MSPNG SPNG
	21A	W61A W61B
	Prä	A95C
S22.02		PTR
	04	E66A
	08	I10B I68A I68B I68C I68D
	15	MSPNG SPNG
	21A	W61A W61B W61C
	Prä	A95C
S22.03		PTR
	04	E66A
	08	I10B I68A I68B I68C I68D
	15	MSPNG SPNG
	21A	W61A W61B W61C
	Prä	A95C
S22.04		PTR
	04	E66A
	08	I10B I68A I68B I68C I68D
	15	MSPNG SPNG
	21A	W61A W61B W61C
	Prä	A95C
S22.05		PTR
	04	E66A
	08	I10B I68A I68B I68C I68D
	15	MSPNG SPNG
	21A	W61A W61B W61C
	Prä	A95C
S22.5		PTR
	04	E66A
	15	MSPNG SPNG
	21A	W61A W61B
	Prä	A11C A95C
S22.06		PTR
	04	E66A
	08	I10B I68A I68B I68C I68D
	15	MSPNG SPNG
	21A	W61A W61B W61C
	Prä	A95C
S22.8		PTR
	08	I76A I76B
	21A	W61A W61B W61C
	Prä	A95C
S22.9		PTR
	08	I76A I76B
	21A	W61A W61B W61C
	Prä	A95C
S22.20		PTR
	04	E66A E66B
	15	MSPNG SPNG
	21A	W61A W61B W61C
	Prä	A95C
S22.21		PTR
	04	E66A E66B
	15	MSPNG SPNG
	21A	W61A W61B W61C
	Prä	A95C
S22.22		PTR
	04	E66A E66B
	15	MSPNG SPNG
	21A	W61A W61B W61C
	Prä	A95C
S22.23		PTR
	04	E66A E66B
	15	MSPNG SPNG
	21A	W61A W61B W61C
	Prä	A95C
S22.31		PTR
	04	E66A E66B
	21A	W61A W61B W61C
	Prä	A95C
S22.32		PTR
	04	E66A E66B
	21A	W61A W61B W61C
	Prä	A95C
S22.40		PTR
	04	E66A E66B
	15	MSPNG SPNG
	21A	W61A W61B W61C
	Prä	A95C
S22.41		PTR
	04	E66A E66B
	15	MSPNG SPNG
	21A	W61A W61B W61C
	Prä	A95C
S22.42		PTR
	04	E66A E66B
	21A	W61A W61B W61C
	Prä	A95C
S22.43		PTR
	04	E66A E66B
	21A	W61A W61B W61C
	Prä	A95C
S22.44		PTR
	04	E66A
	15	MSPNG SPNG
	21A	W61A W61B W61C
	Prä	A11C A95C
S23.0		PTR
	08	I68A I68B I68C I68D
	15	MSPNG SPNG
	21A	W61A W61B W61C
	Prä	A95C
S23.2		PTR
	04	E66A E66B
	21A	W61A W61B W61C
	Prä	A95C
S23.3		PTR
	08	I68A I68B I68C I68D
	21A	W61A W61B W61C
	Prä	A95C
S23.4		PTR
	04	E75A E75B E75C
	21A	W61A W61B W61C
	Prä	A95C
S23.5		PTR
	08	I76A I76B
	21A	W61A W61B W61C
	Prä	A95C
S23.10		PTR
	08	I68A I68B I68C I68D
	15	MSPNG SPNG
	21A	W61A W61B W61C
	Prä	A95C
S23.11		PTR
	08	I68A I68B I68C I68D
	15	MSPNG SPNG
	21A	W61A W61B W61C
	Prä	A95C
S23.12		PTR
	08	I68A I68B I68C I68D
	15	MSPNG SPNG
	21A	W61A W61B W61C
	Prä	A95C
S23.13		PTR
	08	I68A I68B I68C I68D
	15	MSPNG SPNG
	21A	W61A W61B W61C
	Prä	A95C
S23.14		PTR
	08	I68A I68B I68C I68D
	15	MSPNG SPNG
	21A	W61A W61B W61C
	Prä	A95C
S23.15		PTR
	08	I68A I68B I68C I68D
	15	MSPNG SPNG
	21A	W61A W61B W61C
	Prä	A95C
S23.16		PTR
	08	I68A I68B I68C I68D
	15	MSPNG SPNG
	21A	W61A W61B W61C
	Prä	A95C
S23.17		PTR
	08	I68A I68B I68C I68D
	15	MSPNG SPNG
	21A	W61A W61B W61C
	Prä	A95C
S24.0		PTR
	01	B60A B60B
	15	MSPNG SPNG
	21A	W61A W61B W61C
	Prä	A95C B61A B61B B61C B61D B61E
S24.2		PTR
	01	B71A B71B B71C
	15	MSPNG SPNG
	21A	W61A W61B W61C
	Prä	A95C
S24.3		PTR
	01	B71A B71B B71C
	21A	W61A W61B W61C
	Prä	A95C
S24.4		PTR
	01	B71A B71B B71C
	15	MSPNG SPNG
	21A	W61A W61B W61C
	Prä	A95C
S24.5		PTR
	01	B71A B71B B71C
	21A	W61A W61B W61C
	Prä	A95C
S24.6		PTR
	01	B71A B71B B71C

DIAG

ICD	MDC	DRG
		B81A B81B B81C
	21A	W61A W61B W61C
	Prä	A95C
S24.10		PTR
	01	B60A B60B
	15	MSPNG SPNG
	21A	W61A W61B W61C
	Prä	A95C B61A B61B
		B61C B61D B61E
S24.11		PTR
	01	B60A B60B
	15	MSPNG SPNG
	21A	W61A W61B W61C
	Prä	A95C B61A B61B
		B61C B61D B61E
S24.12		PTR
	01	B60A B60B
	15	MSPNG SPNG
	21A	W61A W61B W61C
	Prä	A95C B61A B61B
		B61C B61D B61E
S24.70		PTR
	15	MSPNG SPNG
	21A	W61A W61B W61C
	Prä	961Z A95C
S24.71		PTR
	15	MSPNG SPNG
	21A	W61A W61B W61C
	Prä	961Z A95C
S24.72		PTR
	15	MSPNG SPNG
	21A	W61A W61B W61C
	Prä	961Z A95C
S24.73		PTR
	15	MSPNG SPNG
	21A	W61A W61B W61C
	Prä	961Z A95C
S24.74		PTR
	15	MSPNG SPNG
	21A	W61A W61B W61C
	Prä	961Z A95C
S24.75		PTR
	15	MSPNG SPNG
	21A	W61A W61B W61C
	Prä	961Z A95C
S24.76		PTR
	15	MSPNG SPNG
	21A	W61A W61B W61C
	Prä	961Z A95C
S24.77		PTR
	15	MSPNG SPNG
	21A	W61A W61B W61C
	Prä	961Z A95C
S25.0		PTR
	15	MSPNG SPNG
	21A	W61A W61B W61C
	21B	X60A X60B X60C
	Prä	A95C
S25.1		PTR
	15	MSPNG SPNG
	21A	W61A W61B W61C
	21B	X60A X60B X60C
	Prä	A95C
S25.2		PTR
	15	MSPNG SPNG
	21A	W61A W61B W61C
	21B	X60A X60B X60C
	Prä	A95C
S25.3		PTR
	15	MSPNG SPNG
	21A	W61A W61B W61C
	21B	X60A X60B X60C
	Prä	A95C
S25.4		PTR
	21A	W61A W61B W61C
	21B	X60A X60B X60C
	Prä	A95C
S25.5		PTR
	21A	W61A W61B W61C
	21B	X60A X60B X60C
	Prä	A95C
S25.7		PTR
	21A	W61A W61B W61C
	21B	X60A X60B X60C
	Prä	A95C
S25.9		PTR
	21A	W61A W61B W61C
	21B	X60A X60B X60C
	Prä	A95C
S25.80		PTR
	01	B81A B81B B81C
	15	MSPNG SPNG
S25.81		PTR
	01	B81A B81B B81C
	15	MSPNG SPNG
S25.82		PTR
	01	B81A B81B B81C
	15	MSPNG SPNG
S25.88		PTR
	21A	W61A W61B W61C
	21B	X60A X60B X60C
	Prä	A95C
S26.0		PTR
	05	F75A F75B F75C
		F75D
	15	MSPNG SPNG
	21A	W61A W61B W61C
	Prä	A95C
S26.9		PTR
	05	F75A F75B F75C
		F75D
	15	MSPNG SPNG
	21A	W61A W61B W61C
	Prä	A95C
S26.81		PTR
	05	F75A F75B F75C
		F75D
	15	MSPNG SPNG
	21A	W61A W61B W61C
	Prä	A95C
S26.82		PTR
	05	F75A F75B F75C
		F75D
	15	MSPNG SPNG
	21A	W61A W61B W61C
	Prä	A95C
S26.83		PTR
	05	F75A F75B F75C
		F75D
	15	MSPNG SPNG
	21A	W61A W61B W61C
	Prä	A95C
S26.88		PTR
	05	F75A F75B F75C
		F75D
	15	MSPNG SPNG
	21A	W61A W61B W61C
	Prä	A95C
S27.0		PTR
	04	E66A E76A E76B
		E76C E76D
	15	MSPNG SPNG
	21A	W61A W61B W61C
	Prä	A11C A95C
S27.1		PTR
	04	E66A E76A E76B
		E76C E76D
	15	MSPNG SPNG
	21A	W61A W61B W61C
	Prä	A11C A95C
S27.2		PTR
	04	E66A E76A E76B
		E76C E76D
	15	MSPNG SPNG
	21A	W61A W61B W61C
	Prä	A11C A95C
S27.4		PTR
	04	E66A E66B
	15	MSPNG SPNG
	21A	W61A W61B W61C
	Prä	A95C
S27.5		PTR
	04	E75A E75B E75C
	15	MSPNG SPNG
	21A	W61A W61B W61C
	Prä	A11C A95C
S27.6		PTR
	04	E75A E75B E75C
	15	MSPNG SPNG
	21A	W61A W61B W61C
	Prä	A95C
S27.7		PTR
	15	MSPNG SPNG
	21A	W61A W61B W61C
	21B	X60A X60B X60C
	Prä	A11C A95C
S27.9		PTR
	15	MSPNG SPNG
	21A	W61A W61B W61C
	21B	X60A X60B X60C
	Prä	A95C
S27.31		PTR
	04	E66A E75A E75B
		E75C
	21A	W61A W61B W61C
	Prä	A11C A95C
S27.32		PTR
	04	E66A E66B
	15	MSPNG SPNG
	21A	W61A W61B W61C
	Prä	A11C A95C
S27.38		PTR
	04	E75A E75B E75C
	15	MSPNG SPNG
	21A	W61A W61B W61C
	Prä	A95C
S27.81		PTR
	04	E66A E66B
	15	MSPNG SPNG
	21A	W61A W61B W61C
	Prä	A11C A95C
S27.82		PTR
	04	E75A E75B E75C
	15	MSPNG SPNG
	21A	W61A W61B W61C
	Prä	A95C
S27.83		PTR
	06	G71A G71B
	15	MSPNG SPNG
	21A	W61A W61B W61C

ICD	MDC	DRG
	Prä	A11C A95C
S27.84		PTR
	04	E75A E75B E75C
	15	MSPNG SPNG
	21A	W61A W61B W61C
	Prä	A95C
S27.88		PTR
	04	E75A E75B E75C
	15	MSPNG SPNG
	21A	W61A W61B W61C
	Prä	A95C
S28.0		PTR
	15	MSPNG SPNG
	21A	W61A W61B W61C
	21B	X60A X60B X60C
	Prä	A11C A95C
S28.1		PTR
	15	MSPNG SPNG
	21A	W61A W61B W61C
	21B	X60A X60B X60C
	Prä	A95C
S29.0		PTR
	08	I68A I68B I68C
		I68D
	21A	W61A W61B W61C
	Prä	A95C
S29.7		PTR
	21A	W61A W61B W61C
	21B	X60A X60B X60C
	Prä	A95C
S29.9	21B	X60A X60B X60C
S29.80	01	B81A B81B B81C
	15	MSPNG SPNG
S29.88	21B	X60A X60B X60C
S30.0	21B	X60A X60B X60C
S30.1	21B	X60A X60B X60C
S30.2	21B	X60A X60B X60C
S30.7	21B	X60A X60B X60C
S30.9	21B	X60A X60B X60C
S30.81	21B	X60A X60B X60C
S30.82		PTR
	09	J67Z
	21A	W61A W61B W61C
	Prä	A95C
S30.83		PTR
	09	J67Z
	21A	W61A W61B W61C
	Prä	A95C
S30.84		PTR
	09	J65Z
	21A	W61A W61B W61C
	Prä	A95C
S30.85	21B	X60A X60B X60C
S30.86	21B	X60A X60B X60C
S30.88	21B	X60A X60B X60C
S31.0		PTR
	15	MSPNG SPNG
	21A	W61A W61B W61C
	21B	X60A X60B X60C
	Prä	A95C
S31.1		PTR
	15	MSPNG SPNG
	21A	W61A W61B W61C
	21B	X60A X60B X60C
	Prä	A95C
S31.2		PTR
	12	M64Z
	21A	W61A W61B W61C
	Prä	A95C
S31.3		PTR
	12	M64Z
	15	MSPNG SPNG
	21A	W61A W61B W61C
	Prä	A95C
S31.4		PTR
	13	N62A N62B
	21A	W61A W61B W61C
	Prä	A95C
S31.5		PTR
	12	M64Z
	13	N62A N62B
	21A	W61A W61B W61C
	Prä	A95C
S31.7		PTR
	15	MSPNG SPNG
	21A	W61A W61B W61C
	21B	X60A X60B X60C
	Prä	A95C
S31.80		PTR
	15	MSPNG SPNG
	21A	W61A W61B W61C
	21B	X60A X60B X60C
	Prä	A95C
S31.83		PTR
	08	I02A I02B I02C
		I08A I08B I13A
		I13B I20A I20C
		I20D I22Z I32C
	15	MSPNG SPNG
	21A	W61A W61B W61C
	21B	X01A X07A X07B
	Prä	961Z A95C
	Prä	961Z A95C
	21A	W61A W61B W61C
S31.85	Prä	961Z A95C
	21A	W61A W61B W61C
S31.86	Prä	961Z A95C
	08	I02A I02B I02C
		I08A I08B I13A
		I13B I20A I20C
		I20D I22Z I32C
	21A	W61A W61B W61C
	21B	X01A X07A X07B
S31.87		PTR
	15	MSPNG SPNG
	21A	W61A W61B W61C
	Prä	961Z A95C
S31.88		PTR
	08	I02A I02B I02C
		I08A I08B I13A
		I13B I20A I20C
		I20D I22Z I32C
	15	MSPNG SPNG
	21A	W61A W61B W61C
	21B	X01A X07A X07B
	Prä	961Z A95C
S31.89		PTR
	08	I02A I02B I02C
		I08A I08B I13A
		I13B I20A I20C
		I20D I22Z I32C
	15	MSPNG SPNG
	21A	W61A W61B W61C
	21B	X01A X07A X07B
	Prä	961Z A95C
S32.00		PTR
	04	E66A
	08	I68A I68B I68C
		I68D
	15	MSPNG SPNG
	21A	W61A W61B W61C
	Prä	A95C
S32.01		PTR
	04	E66A
	08	I10B I68A I68B
		I68C I68D
	15	MSPNG SPNG
	21A	W61A W61B W61C
	Prä	A95C
S32.1		PTR
	08	I10B I68A I68B
		I68C I68D
	15	MSPNG SPNG
	21A	W61A W61B W61C
	Prä	A95C
S32.02		PTR
	04	E66A
	08	I10B I68A I68B
		I68C I68D
	15	MSPNG SPNG
	21A	W61A W61B W61C
	Prä	A95C
S32.2		PTR
	08	I10B I68A I68B
		I68C I68D
	15	MSPNG SPNG
	21A	W61A W61B W61C
	Prä	A95C
S32.03		PTR
	04	E66A
	08	I10B I68A I68B
		I68C I68D
	15	MSPNG SPNG
	21A	W61A W61B W61C
	Prä	A95C
S32.3		PTR
	08	I60A I60B
	21A	W61A W61B W61C
	Prä	A95C
S32.04		PTR
	04	E66A
	08	I10B I68A I68B
		I68C I68D
	15	MSPNG SPNG
	21A	W61A W61B W61C
	Prä	A95C
S32.4		PTR
	08	I60A I60B
	21A	W61A W61B W61C
	Prä	A95C
S32.05		PTR
	04	E66A
	08	I10B I68A I68B
		I68C I68D
	15	MSPNG SPNG
	21A	W61A W61B W61C
	Prä	A95C
S32.5		PTR
	08	I60A I60B
	21A	W61A W61B W61C
	Prä	A95C
S32.7		PTR
	08	I10B I60A I60B
	15	MSPNG SPNG
	21A	W61A W61B W61C
	Prä	A11C A95C
S32.81		PTR
	08	I60A I60B
	21A	W61A W61B W61C
	Prä	A95C

DIAG

ICD	MDC	DRG
S32.82		PTR
	08	I68A I68B I68C I68D
	15	MSPNG SPNG
	21A	W61A W61B W61C
	Prä	A95C
S32.89		PTR
	08	I60A I60B
	15	MSPNG SPNG
	21A	W61A W61B W61C
	Prä	A11C A95C
S33.0		PTR
	08	I68A I68B I68C I68D
	15	MSPNG SPNG
	21A	W61A W61B W61C
	Prä	A95C
S33.2		PTR
	08	I68A I68B I68C I68D
	21A	W61A W61B W61C
	Prä	A95C
S33.3		PTR
	08	I68A I68B I68C I68D
	21A	W61A W61B W61C
	Prä	A95C
S33.4		PTR
	08	I68A I68B I68C I68D
	21A	W61A W61B W61C
	Prä	A95C
S33.6		PTR
	08	I68A I68B I68C I68D
	21A	W61A W61B W61C
	Prä	A95C
S33.7		PTR
	08	I68A I68B I68C I68D
	21A	W61A W61B W61C
	Prä	A95C
S33.10		PTR
	08	I68A I68B I68C I68D
	15	MSPNG SPNG
	21A	W61A W61B W61C
	Prä	A95C
S33.11		PTR
	08	I68A I68B I68C I68D
	15	MSPNG SPNG
	21A	W61A W61B W61C
	Prä	A95C
S33.12		PTR
	08	I68A I68B I68C I68D
	15	MSPNG SPNG
	21A	W61A W61B W61C
	Prä	A95C
S33.13		PTR
	08	I68A I68B I68C I68D
	15	MSPNG SPNG
	21A	W61A W61B W61C
	Prä	A95C
S33.14		PTR
	08	I68A I68B I68C I68D
	15	MSPNG SPNG
	21A	W61A W61B W61C
	Prä	A95C
S33.15		PTR
	08	I68A I68B I68C I68D
	15	MSPNG SPNG
	21A	W61A W61B W61C
	Prä	A95C
S33.50		PTR
	08	I68A I68B I68C I68D
	21A	W61A W61B W61C
	Prä	A95C
S33.51		PTR
	08	I68A I68B I68C I68D
	21A	W61A W61B W61C
	Prä	A95C
S34.0		PTR
	01	B60A B60B
	15	MSPNG SPNG
	21A	W61A W61B W61C
	Prä	A11C A95C B61A B61B B61C B61D B61E
S34.2		PTR
	01	B71A B71B B71C
	15	MSPNG SPNG
	21A	W61A W61B W61C
	Prä	A11C A95C
S34.4		PTR
	01	B71A B71B B71C
	15	MSPNG SPNG
	21A	W61A W61B W61C
	Prä	A11C A95C
S34.5		PTR
	01	B71A B71B B71C
	15	MSPNG SPNG
	21A	W61A W61B W61C
	Prä	A11C A95C
S34.6		PTR
	01	B71A B71B B71C
	21A	W61A W61B W61C
	Prä	A11C A95C
S34.8		PTR
	01	B71A B71B B71C
	21A	W61A W61B W61C
	Prä	A11C A95C
S34.10		PTR
	01	B60A B60B
	15	MSPNG SPNG
	21A	W61A W61B W61C
	Prä	A11C A95C B61A B61B B61C B61D B61E
S34.11		PTR
	01	B60A B60B
	15	MSPNG SPNG
	21A	W61A W61B W61C
	Prä	A11C A95C B61A B61B B61C B61D B61E
S34.18		PTR
	01	B60A B60B B66A B68A B70A B81A B85A B86B
	04	E36A E36B E36C E63A E70A E70B E71A E77A E86B
	05	F67A F73A F75C
	06	G67A G67B G86C
	07	H64A
	08	I02A I02B I02C I06A I06B I06C I10B I60A I61A I65A I68A I68B I71A I77A
	09	J11A
	10	K60B K62A K64A
	11	L18A L38Z L42A L60A L60B L62A L63A L63C L64A L68A
	15	MSPNG SPNG
	16	Q60B
	17	R62A
	18B	T60B T60D
	19	U64A
	21A	W01A W01B W01C W01D W61A W61B W61C
	23	Z86A
	Prä	A11C A95C
S34.30		PTR
	01	B60A B60B
	15	MSPNG SPNG
	21A	W61A W61B W61C
	Prä	A11C A95C B61A B61B B61C B61D B61E
S34.31		PTR
	01	B60A B60B
	15	MSPNG SPNG
	21A	W61A W61B W61C
	Prä	A11C A95C B61A B61B B61C B61D B61E
S34.38		PTR
	01	B60A B60B B66A B68A B70A B81A B85A B86B
	04	E36A E36B E36C E63A E70A E70B E71A E77A E86B
	05	F67A F73A F75C
	06	G67A G67B G86C
	07	H64A
	08	I02A I02B I02C I06A I06B I06C I10B I60A I61A I65A I68A I68B I71A I77A
	09	J11A
	10	K60B K62A K64A
	11	L18A L38Z L42A L60A L60B L62A L63A L63C L64A L68A
	15	MSPNG SPNG
	16	Q60B
	17	R62A
	18B	T60B T60D
	19	U64A
	21A	W01A W01B W01C W01D W61A W61B W61C
	23	Z86A
	Prä	A11C A95C
S34.70		PTR
	15	MSPNG SPNG

ICD	MDC	DRG
	21A	W61A W61B W61C
	Prä	961Z A11C A95C
S34.71		PTR
	15	MSPNG SPNG
	21A	W61A W61B W61C
	Prä	961Z A11C A95C
S34.72		PTR
	15	MSPNG SPNG
	21A	W61A W61B W61C
	Prä	961Z A11C A95C
S34.73		PTR
	15	MSPNG SPNG
	21A	W61A W61B W61C
	Prä	961Z A11C A95C
S34.74		PTR
	15	MSPNG SPNG
	21A	W61A W61B W61C
	Prä	961Z A11C A95C
S34.75		PTR
	15	MSPNG SPNG
	21A	W61A W61B W61C
	Prä	961Z A11C A95C
S34.76		PTR
	15	MSPNG SPNG
	21A	W61A W61B W61C
	Prä	961Z A11C A95C
S34.77		PTR
	15	MSPNG SPNG
	21A	W61A W61B W61C
	Prä	961Z A11C A95C
S35.0		PTR
	05	F75A F75B F75C
		F75D
	15	MSPNG SPNG
	21A	W61A W61B W61C
	Prä	A11C A95C
S35.1		PTR
	05	F75A F75B F75C
		F75D
	15	MSPNG SPNG
	21A	W61A W61B W61C
	Prä	A11C A95C
S35.2		PTR
	05	F75A F75B F75C
		F75D
	15	MSPNG SPNG
	21A	W61A W61B W61C
	Prä	A11C A95C
S35.3		PTR
	05	F75A F75B F75C
		F75D
	15	MSPNG SPNG
	21A	W61A W61B W61C
	Prä	A11C A95C
S35.4		PTR
	05	F75A F75B F75C
		F75D
	15	MSPNG SPNG
	21A	W61A W61B
	Prä	A11C A95C
S35.5		PTR
	05	F75A F75B F75C
		F75D
	15	MSPNG SPNG
	21A	W61A W61B W61C
	Prä	A11C A95C
S35.7		PTR
	15	MSPNG SPNG
	21A	W61A W61B W61C
	21B	X60A X60B X60C

ICD	MDC	DRG
	Prä	A11C A95C
S35.9		PTR
	15	MSPNG SPNG
	21A	W61A W61B W61C
	21B	X60A X60B X60C
	Prä	A11C A95C
S35.80		PTR
	01	B81A B81B B81C
	15	MSPNG SPNG
S35.81		PTR
	01	B81A B81B B81C
	15	MSPNG SPNG
S35.82		PTR
	01	B81A B81B B81C
	15	MSPNG SPNG
S35.88		PTR
	15	MSPNG SPNG
	21A	W61A W61B W61C
	21B	X60A X60B X60C
	Prä	A11C A95C
S36.00		PTR
	16	Q60A Q60B Q60C
	21A	W61A W61B W61C
	Prä	A11C A95C
S36.01		PTR
	15	MSPNG SPNG
	16	Q60A Q60B Q60C
	21A	W61A W61B W61C
	Prä	A11C A95C
S36.02		PTR
	15	MSPNG SPNG
	16	Q60A Q60B Q60C
	21A	W61A W61B W61C
	Prä	A11C A95C
S36.03		PTR
	15	MSPNG SPNG
	16	Q60A Q60B Q60C
	21A	W61A W61B
	Prä	A11C A95C
S36.3		PTR
	06	G71A G71B
	21A	W61A W61B W61C
	Prä	A11C A95C
S36.04		PTR
	16	Q60A Q60B Q60C
	21A	W61A W61B
	Prä	A11C A95C
S36.6		PTR
	06	G71A G71B
	15	MSPNG SPNG
	21A	W61A W61B W61C
	Prä	A11C A95C
S36.7		PTR
	06	G71A G71B
	15	MSPNG SPNG
	21A	W61A W61B W61C
	Prä	A11C A95C
S36.08		PTR
	16	Q60A Q60B Q60C
	21A	W61A W61B W61C
	Prä	A11C A95C
S36.9		PTR
	06	G71A G71B
	21A	W61A W61B W61C
	Prä	A11C A95C
S36.10		PTR
	07	H63A H63B H63C
		H63D
	15	MSPNG SPNG
	21A	W61A W61B W61C

ICD	MDC	DRG
	Prä	A11C A95C
S36.11		PTR
	07	H63A H63B H63C
		H63D
	15	MSPNG SPNG
	21A	W61A W61B W61C
	Prä	A11C A95C
S36.12		PTR
	07	H63A H63B H63C
		H63D
	15	MSPNG SPNG
	21A	W61A W61B W61C
	Prä	A11C A95C
S36.13		PTR
	07	H63A H63B H63C
		H63D
	15	MSPNG SPNG
	21A	W61A W61B W61C
	Prä	A11C A95C
S36.14		PTR
	07	H63A H63B H63C
		H63D
	15	MSPNG SPNG
	21A	W61A W61B W61C
	Prä	A11C A95C
S36.15		PTR
	07	H63A H63B H63C
		H63D
	15	MSPNG SPNG
	21A	W61A W61B W61C
	Prä	A11C A95C
S36.16		PTR
	07	H63A H63B H63C
		H63D
	15	MSPNG SPNG
	21A	W61A W61B W61C
	Prä	A11C A95C
S36.17		PTR
	07	H64A H64B H64C
	15	MSPNG SPNG
	21A	W61A W61B W61C
	Prä	A11C A95C
S36.18		PTR
	07	H64A H64B H64C
	15	MSPNG SPNG
	21A	W61A W61B W61C
	Prä	A11C A95C
S36.20		PTR
	07	H62A H62B
	21A	W61A W61B W61C
	Prä	A11C A95C
S36.21		PTR
	07	H62A H62B
	21A	W61A W61B W61C
	Prä	A11C A95C
S36.22		PTR
	07	H62A H62B
	21A	W61A W61B W61C
	Prä	A11C A95C
S36.23		PTR
	07	H62A H62B
	21A	W61A W61B W61C
	Prä	A11C A95C
S36.29		PTR
	07	H62A H62B
	21A	W61A W61B W61C
	Prä	A11C A95C
S36.40		PTR
	06	G71A G71B
	15	MSPNG SPNG

DIAG

ICD	MDC	DRG
	21A	W61A W61B W61C
	Prä	A11C A95C
S36.41		PTR
	06	G71A G71B
	21A	W61A W61B W61C
	Prä	A11C A95C
S36.49		PTR
	06	G71A G71B
	21A	W61A W61B W61C
	Prä	A11C A95C
S36.50		PTR
	06	G71A G71B
	15	MSPNG SPNG
	21A	W61A W61B W61C
	Prä	A11C A95C
S36.51		PTR
	06	G71A G71B
	21A	W61A W61B W61C
	Prä	A11C A95C
S36.52		PTR
	06	G71A G71B
	15	MSPNG SPNG
	21A	W61A W61B W61C
	Prä	A11C A95C
S36.53		PTR
	06	G71A G71B
	15	MSPNG SPNG
	21A	W61A W61B W61C
	Prä	A11C A95C
S36.54		PTR
	06	G71A G71B
	21A	W61A W61B W61C
	Prä	A11C A95C
S36.59		PTR
	06	G71A G71B
	15	MSPNG SPNG
	21A	W61A W61B W61C
	Prä	A11C A95C
S36.81		PTR
	06	G71A G71B
	15	MSPNG SPNG
	21A	W61A W61B W61C
	Prä	A11C A95C
S36.82		PTR
	06	G71A G71B
	21A	W61A W61B W61C
	Prä	A11C A95C
S36.83		PTR
	11	L68A L68B L68C
	15	MSPNG SPNG
	21A	W61A W61B W61C
	Prä	A11C A95C
S36.88		PTR
	21A	W61A W61B W61C
	21B	X60A X60B X60C
	Prä	A11C A95C
S37.00		PTR
	11	L64A L64B
	21A	W61A W61B W61C
	Prä	A95C
S37.01		PTR
	11	L64A L64B
	21A	W61A W61B W61C
	Prä	A95C
S37.1		PTR
	11	L68A L68B L68C
	15	MSPNG SPNG
	21A	W61A W61B W61C
	Prä	A95C
S37.02		PTR
	11	L69A L69B
	15	MSPNG SPNG
	21A	W61A W61B
	Prä	A95C
S37.03		PTR
	11	L69A L69B
	21A	W61A W61B
	Prä	A95C
S37.4		PTR
	13	N62A N62B
	21A	W61A W61B W61C
	Prä	A11C A95C
S37.5		PTR
	13	N62A N62B
	21A	W61A W61B W61C
	Prä	A11C A95C
S37.6		PTR
	13	N62A N62B
	21A	W61A W61B W61C
	Prä	A11C A95C
S37.7		PTR
	12	M64Z
	13	N62A N62B
	21A	W61A W61B W61C
	Prä	A11C A95C
S37.9		PTR
	12	M64Z
	13	N62A N62B
	21A	W61A W61B W61C
	Prä	A11C A95C
S37.20		PTR
	11	L68A L68B L68C
	21A	W61A W61B W61C
	Prä	A95C
S37.21		PTR
	11	L68A L68B L68C
	21A	W61A W61B W61C
	Prä	A95C
S37.22		PTR
	11	L68A L68B L68C
	21A	W61A W61B W61C
	Prä	A95C
S37.28		PTR
	11	L68A L68B L68C
	21A	W61A W61B W61C
	Prä	A95C
S37.30		PTR
	11	L64A L64B
	21A	W61A W61B W61C
	Prä	A95C
S37.31		PTR
	11	L64A L64B
	21A	W61A W61B W61C
	Prä	A95C
S37.32		PTR
	11	L64A L64B
	21A	W61A W61B W61C
	Prä	A95C
S37.33		PTR
	11	L68A L68B L68C
	21A	W61A W61B W61C
	Prä	A95C
S37.38		PTR
	11	L68A L68B L68C
	21A	W61A W61B W61C
	Prä	A95C
S37.81		PTR
	10	K09A K09B K64A
		K64B K64C
	21A	W61A W61B W61C
	Prä	A11C A95C
S37.82		PTR
	12	M64Z
	21A	W61A W61B W61C
	Prä	A11C A95C
S37.83		PTR
	12	M64Z
	21A	W61A W61B W61C
	Prä	A11C A95C
S37.84		PTR
	12	M64Z
	21A	W61A W61B W61C
	Prä	A11C A95C
S37.88		PTR
	12	M64Z
	13	N62A N62B
	21A	W61A W61B W61C
	Prä	A11C A95C
S38.0		PTR
	12	M64Z
	13	N62A N62B
	15	MSPNG SPNG
	21A	W61A W61B W61C
	Prä	A11C A95C
S38.1		PTR
	15	MSPNG SPNG
	21A	W61A W61B W61C
	21B	X60A X60B X60C
	Prä	A11C A95C
S38.2		PTR
	12	M64Z
	13	N62A N62B
	21A	W61A W61B W61C
	Prä	A11C A95C
S38.3		PTR
	15	MSPNG SPNG
	21A	W61A W61B W61C
	21B	X60A X60B X60C
	Prä	A11C A95C
S39.0		PTR
	08	I68A I68B I68C
		I68D
	21A	W61A W61B W61C
	Prä	A11C A95C
S39.6		PTR
	12	M64Z
	13	N62A N62B
	21A	W61A W61B W61C
	Prä	A11C A95C
S39.7		PTR
	21A	W61A W61B W61C
	21B	X60A X60B X60C
	Prä	A11C A95C
S39.9	21B	X60A X60B X60C
S39.80		PTR
	21A	W61A W61B W61C
	21B	X60A X60B X60C
	Prä	A11C A95C
S39.81	01	B81A B81B B81C
	15	MSPNG SPNG
S39.88	21B	X60A X60B X60C
S40.0	21B	X60A X60B X60C
S40.7	21B	X60A X60B X60C
S40.9	21B	X60A X60B X60C
S40.81	21B	X60A X60B X60C
S40.82		PTR
	09	J67Z
	21A	W61A W61B W61C
	Prä	A95C
S40.83		PTR

ICD	MDC	DRG
	09	J67Z
	21A	W61A W61B W61C
	Prä	A95C
S40.84		PTR
	09	J65Z
	21A	W61A W61B W61C
	Prä	A95C
S40.86	21B	X60A X60B X60C
S40.88	21B	X60A X60B X60C
S41.0		PTR
	21A	W61A W61B W61C
	21B	X60A X60B X60C
	Prä	A95C
S41.1		PTR
	21A	W61A W61B W61C
	21B	X60A X60B X60C
	Prä	A95C
S41.7		PTR
	21A	W61A W61B W61C
	21B	X60A X60B X60C
	Prä	A95C
S41.80		PTR
	21A	W61A W61B W61C
	21B	X60A X60B X60C
	Prä	A95C
S41.84	Prä	961Z A95C
	21A	W61A W61B W61C
S41.85	Prä	961Z A95C
	21A	W61A W61B W61C
S41.86	Prä	961Z A95C
	08	I02A I02B I02C
		I08A I08B I13A
		I13B I20A I20C
		I20D I22Z I32C
	21A	W61A W61B W61C
	21B	X01A X07A X07B
S41.87		PTR
	21A	W61A W61B W61C
	Prä	961Z A95C
S41.88		PTR
	08	I02A I02B I02C
		I08A I08B I13A
		I13B I20A I20C
		I20D I22Z I32C
	21A	W61A W61B W61C
	21B	X01A X07A X07B
	Prä	961Z A95C
S41.89		PTR
	08	I02A I02B I02C
		I08A I08B I13A
		I13B I20A I20C
		I20D I22Z I32C
	21A	W61A W61B W61C
	21B	X01A X07A X07B
	Prä	961Z A95C
S42.00		PTR
	08	I77A I77B
	21A	W61A W61B W61C
	Prä	A95C
S42.01		PTR
	08	I77A I77B
	21A	W61A W61B W61C
	Prä	A95C
S42.02		PTR
	08	I77A I77B
	21A	W61A W61B W61C
	Prä	A95C
S42.03		PTR
	08	I77A I77B
	21A	W61A W61B W61C
	Prä	A95C
S42.3		PTR
	08	I75A I75B I75C
	15	MSPNG SPNG
	21A	W61A W61B W61C
	Prä	A95C
S42.7		PTR
	08	I77A I77B
	21A	W61A W61B W61C
	Prä	A95C
S42.8		PTR
	08	I77A I77B
	21A	W61A W61B W61C
	Prä	A95C
S42.09		PTR
	08	I75A I75B I75C
	21A	W61A W61B W61C
	Prä	A95C
S42.9		PTR
	08	I77A I77B
	21A	W61A W61B W61C
	Prä	A95C
S42.10		PTR
	08	I77A I77B
	21A	W61A W61B W61C
	Prä	A95C
S42.11		PTR
	08	I76A I76B
	21A	W61A W61B W61C
	Prä	A95C
S42.12		PTR
	08	I77A I77B
	21A	W61A W61B W61C
	Prä	A95C
S42.13		PTR
	08	I77A I77B
	21A	W61A W61B W61C
	Prä	A95C
S42.14		PTR
	08	I77A I77B
	21A	W61A W61B W61C
	Prä	A95C
S42.19		PTR
	08	I76A I76B
	21A	W61A W61B W61C
	Prä	A95C
S42.20		PTR
	08	I75A I75B I75C
	21A	W61A W61B W61C
	Prä	A95C
S42.21		PTR
	08	I75A I75B I75C
	15	MSPNG SPNG
	21A	W61A W61B W61C
	Prä	A95C
S42.22		PTR
	08	I75A I75B I75C
	21A	W61A W61B W61C
	Prä	A95C
S42.23		PTR
	08	I75A I75B I75C
	21A	W61A W61B W61C
	Prä	A95C
S42.24		PTR
	08	I75A I75B I75C
	21A	W61A W61B W61C
	Prä	A95C
S42.29		PTR
	08	I75A I75B I75C
	15	MSPNG SPNG
	21A	W61A W61B W61C
	Prä	A95C
S42.40		PTR
	08	I77A I77B
	21A	W61A W61B W61C
	Prä	A95C
S42.41		PTR
	08	I77A I77B
	21A	W61A W61B W61C
	Prä	A95C
S42.42		PTR
	08	I77A I77B
	21A	W61A W61B W61C
	Prä	A95C
S42.43		PTR
	08	I77A I77B
	21A	W61A W61B W61C
	Prä	A95C
S42.44		PTR
	08	I77A I77B
	21A	W61A W61B W61C
	Prä	A95C
S42.45		PTR
	08	I77A I77B
	21A	W61A W61B W61C
	Prä	A95C
S42.49		PTR
	08	I77A I77B
	21A	W61A W61B W61C
	Prä	A95C
S43.00		PTR
	08	I77A I77B
	21A	W61A W61B W61C
	Prä	A95C
S43.01		PTR
	08	I77A I77B
	21A	W61A W61B W61C
	Prä	A95C
S43.1		PTR
	08	I77A I77B
	21A	W61A W61B W61C
	Prä	A95C
S43.02		PTR
	08	I77A I77B
	21A	W61A W61B W61C
	Prä	A95C
S43.2		PTR
	08	I77A I77B
	21A	W61A W61B W61C
	Prä	A95C
S43.03		PTR
	08	I77A I77B
	21A	W61A W61B W61C
	Prä	A95C
S43.3		PTR
	08	I77A I77B
	21A	W61A W61B W61C
	Prä	A95C
S43.4		PTR
	08	I77A I77B
	21A	W61A W61B W61C
	Prä	A95C
S43.5		PTR
	08	I77A I77B
	21A	W61A W61B W61C
	Prä	A95C
S43.6		PTR
	04	E75A E75B E75C
	21A	W61A W61B W61C
	Prä	A95C

DIAG

ICD	MDC	DRG
S43.7		PTR
	08	I77A I77B
	21A	W61A W61B W61C
	Prä	A95C
S43.08		PTR
	08	I77A I77B
	21A	W61A W61B W61C
	Prä	A95C
S44.0		PTR
	01	B71A B71B B71C
	21A	W61A W61B W61C
	Prä	A95C
S44.1		PTR
	01	B71A B71B B71C
	21A	W61A W61B W61C
	Prä	A95C
S44.2		PTR
	01	B71A B71B B71C
	21A	W61A W61B W61C
	Prä	A95C
S44.3		PTR
	01	B71A B71B B71C
	21A	W61A W61B W61C
	Prä	A95C
S44.4		PTR
	01	B71A B71B B71C
	21A	W61A W61B W61C
	Prä	A95C
S44.5		PTR
	01	B71A B71B B71C
	21A	W61A W61B W61C
	Prä	A95C
S44.7		PTR
	01	B71A B71B B71C
	21A	W61A W61B W61C
	Prä	A95C
S44.8		PTR
	01	B71A B71B B71C
	21A	W61A W61B W61C
	Prä	A95C
S44.9		PTR
	01	B71A B71B B71C
	21A	W61A W61B W61C
	Prä	A95C
S45.0		PTR
	15	MSPNG SPNG
	21A	W61A W61B W61C
	21B	X60A X60B X60C
	Prä	A95C
S45.1		PTR
	15	MSPNG SPNG
	21A	W61A W61B W61C
	21B	X60A X60B X60C
	Prä	A95C
S45.2		PTR
	15	MSPNG SPNG
	21A	W61A W61B W61C
	21B	X60A X60B X60C
	Prä	A95C
S45.3		PTR
	15	MSPNG SPNG
	21A	W61A W61B W61C
	21B	X60A X60B X60C
	Prä	A95C
S45.7		PTR
	15	MSPNG SPNG
	21A	W61A W61B W61C
	21B	X60A X60B X60C
	Prä	A95C
S45.8		PTR
	15	MSPNG SPNG
	21A	W61A W61B W61C
	21B	X60A X60B X60C
	Prä	A95C
S45.9		PTR
	15	MSPNG SPNG
	21A	W61A W61B W61C
	21B	X60A X60B X60C
	Prä	A95C
S46.0		PTR
	08	I77A I77B
	21A	W61A W61B W61C
	Prä	A95C
S46.1		PTR
	08	I77A I77B
	21A	W61A W61B W61C
	Prä	A95C
S46.2		PTR
	08	I77A I77B
	21A	W61A W61B W61C
	Prä	A95C
S46.3		PTR
	08	I77A I77B
	21A	W61A W61B W61C
	Prä	A95C
S46.7		PTR
	08	I77A I77B
	21A	W61A W61B W61C
	Prä	A95C
S46.8		PTR
	08	I77A I77B
	21A	W61A W61B W61C
	Prä	A95C
S46.9		PTR
	08	I77A I77B
	21A	W61A W61B W61C
	Prä	A95C
S47		PTR
	15	MSPNG SPNG
	21A	W61A W61B W61C
	21B	X60A X60B X60C
	Prä	A95C
S48.0		PTR
	21A	W61A W61B W61C
	21B	X60A X60B X60C
	Prä	A95C
S48.1		PTR
	21A	W61A W61B W61C
	21B	X60A X60B X60C
	Prä	A95C
S48.9		PTR
	21A	W61A W61B W61C
	21B	X60A X60B X60C
	Prä	A95C
S49.7		PTR
	21A	W61A W61B W61C
	21B	X60A X60B X60C
	Prä	A95C
S49.8	21B	X60A X60B X60C
S49.9	21B	X60A X60B X60C
S50.0	21B	X60A X60B X60C
S50.1	21B	X60A X60B X60C
S50.7	21B	X60A X60B X60C
S50.9	21B	X60A X60B X60C
S50.81	21B	X60A X60B X60C
S50.82		PTR
	09	J67Z
	21A	W61A W61B W61C
	Prä	A95C
S50.83		PTR
	09	J67Z
	21A	W61A W61B W61C
	Prä	A95C
S50.84		PTR
	09	J65Z
	21A	W61A W61B W61C
	Prä	A95C
S50.86	21B	X60A X60B X60C
S50.88	21B	X60A X60B X60C
S51.0		PTR
	21A	W61A W61B W61C
	21B	X60A X60B X60C
	Prä	A95C
S51.7		PTR
	21A	W61A W61B W61C
	21B	X60A X60B X60C
	Prä	A95C
S51.9		PTR
	21A	W61A W61B W61C
	21B	X60A X60B X60C
	Prä	A95C
S51.80		PTR
	21A	W61A W61B W61C
	21B	X60A X60B X60C
	Prä	A95C
S51.84	Prä	961Z A95C
	21A	W61A W61B W61C
S51.85	Prä	961Z A95C
	21A	W61A W61B W61C
S51.86	Prä	961Z A95C
	08	I02A I02B I02C
		I08A I08B I13A
		I13B I20A I20C
		I20D I22Z I32C
	21A	W61A W61B W61C
	21B	X01A X07A X07B
S51.87		PTR
	21A	W61A W61B W61C
	Prä	961Z A95C
S51.88		PTR
	08	I02A I02B I02C
		I08A I08B I13A
		I13B I20A I20C
		I20D I22Z I32C
	21A	W61A W61B W61C
	21B	X01A X07A X07B
	Prä	961Z A95C
S51.89		PTR
	08	I02A I02B I02C
		I08A I08B I13A
		I13B I20A I20C
		I20D I22Z I32C
	21A	W61A W61B W61C
	21B	X01A X07A X07B
	Prä	961Z A95C
S52.00		PTR
	08	I74A I74B
	21A	W61A W61B W61C
	Prä	A95C
S52.01		PTR
	08	I74A I74B
	21A	W61A W61B W61C
	Prä	A95C
S52.02		PTR
	08	I74A I74B
	21A	W61A W61B W61C
	Prä	A95C
S52.4		PTR
	08	I74A I74B
	21A	W61A W61B W61C

ICD	MDC	DRG
	Prä	A95C
S52.6		PTR
	08	I74A I74B
	21A	W61A W61B W61C
	Prä	A95C
S52.7		PTR
	08	I77A I77B
	21A	W61A W61B W61C
	Prä	A95C
S52.8		PTR
	08	I74A I74B
	21A	W61A W61B W61C
	Prä	A95C
S52.09		PTR
	08	I74A I74B
	21A	W61A W61B W61C
	Prä	A95C
S52.9		PTR
	08	I74A I74B
	21A	W61A W61B W61C
	Prä	A95C
S52.10		PTR
	08	I74A I74B
	21A	W61A W61B W61C
	Prä	A95C
S52.11		PTR
	08	I74A I74B
	21A	W61A W61B W61C
	Prä	A95C
S52.12		PTR
	08	I74A I74B
	21A	W61A W61B W61C
	Prä	A95C
S52.19		PTR
	08	I74A I74B
	21A	W61A W61B W61C
	Prä	A95C
S52.20		PTR
	08	I74A I74B
	21A	W61A W61B W61C
	Prä	A95C
S52.21		PTR
	08	I74A I74B
	21A	W61A W61B W61C
	Prä	A95C
S52.30		PTR
	08	I74A I74B
	21A	W61A W61B W61C
	Prä	A95C
S52.31		PTR
	08	I74A I74B
	21A	W61A W61B W61C
	Prä	A95C
S52.50		PTR
	08	I74A I74B
	21A	W61A W61B W61C
	Prä	A95C
S52.51		PTR
	08	I74A I74B
	21A	W61A W61B W61C
	Prä	A95C
S52.52		PTR
	08	I74A I74B
	21A	W61A W61B W61C
	Prä	A95C
S52.59		PTR
	08	I74A I74B
	21A	W61A W61B W61C
	Prä	A95C
S53.0		PTR
	08	I77A I77B
	21A	W61A W61B W61C
	Prä	A95C
S53.2		PTR
	08	I74A I74B
	21A	W61A W61B W61C
	Prä	A95C
S53.3		PTR
	08	I74A I74B
	21A	W61A W61B W61C
	Prä	A95C
S53.10		PTR
	08	I77A I77B
	21A	W61A W61B W61C
	Prä	A95C
S53.11		PTR
	08	I77A I77B
	21A	W61A W61B W61C
	Prä	A95C
S53.12		PTR
	08	I77A I77B
	21A	W61A W61B W61C
	Prä	A95C
S53.13		PTR
	08	I77A I77B
	21A	W61A W61B W61C
	Prä	A95C
S53.14		PTR
	08	I77A I77B
	21A	W61A W61B W61C
	Prä	A95C
S53.18		PTR
	08	I77A I77B
	21A	W61A W61B W61C
	Prä	A95C
S53.40		PTR
	08	I74A I74B
	21A	W61A W61B W61C
	Prä	A95C
S53.41		PTR
	08	I74A I74B
	21A	W61A W61B W61C
	Prä	A95C
S53.42		PTR
	08	I74A I74B
	21A	W61A W61B W61C
	Prä	A95C
S53.43		PTR
	08	I74A I74B
	21A	W61A W61B W61C
	Prä	A95C
S53.44		PTR
	08	I74A I74B
	21A	W61A W61B W61C
	Prä	A95C
S53.48		PTR
	08	I74A I74B
	21A	W61A W61B W61C
	Prä	A95C
S54.0		PTR
	01	B71A B71B B71C
	21A	W61A W61B W61C
	Prä	A95C
S54.1		PTR
	01	B71A B71B B71C
	21A	W61A W61B W61C
	Prä	A95C
S54.2		PTR
	01	B71A B71B B71C
	21A	W61A W61B W61C
	Prä	A95C
S54.3		PTR
	01	B71A B71B B71C
	21A	W61A W61B W61C
	Prä	A95C
S54.7		PTR
	01	B71A B71B B71C
	21A	W61A W61B W61C
	Prä	A95C
S54.8		PTR
	01	B71A B71B B71C
	21A	W61A W61B W61C
	Prä	A95C
S54.9		PTR
	01	B71A B71B B71C
	21A	W61A W61B W61C
	Prä	A95C
S55.0		PTR
	15	MSPNG SPNG
	21A	W61A W61B W61C
	21B	X60A X60B X60C
	Prä	A95C
S55.1		PTR
	15	MSPNG SPNG
	21A	W61A W61B W61C
	21B	X60A X60B X60C
	Prä	A95C
S55.2		PTR
	15	MSPNG SPNG
	21A	W61A W61B W61C
	21B	X60A X60B X60C
	Prä	A95C
S55.7		PTR
	15	MSPNG SPNG
	21A	W61A W61B W61C
	21B	X60A X60B X60C
	Prä	A95C
S55.8		PTR
	15	MSPNG SPNG
	21A	W61A W61B W61C
	21B	X60A X60B X60C
	Prä	A95C
S55.9		PTR
	15	MSPNG SPNG
	21A	W61A W61B W61C
	21B	X60A X60B X60C
	Prä	A95C
S56.0		PTR
	08	I02A I02B I02C
		I32A I32B I32C
		I32D I32E I32F
		I74A I74B
	21A	W61A W61B W61C
	Prä	A95C
S56.1		PTR
	08	I02A I02B I02C
		I32A I32B I32C
		I32D I32E I32F
		I74A I74B
	21A	W61A W61B W61C
	Prä	A95C
S56.2		PTR
	08	I74A I74B
	21A	W61A W61B W61C
	Prä	A95C
S56.3		PTR
	08	I02A I02B I02C
		I32A I32B I32C
		I32D I32E I32F
		I74A I74B

DIAG

ICD	MDC	DRG
	21A	W61A W61B W61C
	Prä	A95C
S56.4		PTR
	08	I02A I02B I02C
		I32A I32B I32C
		I32D I32E I32F
		I74A I74B
	21A	W61A W61B W61C
	Prä	A95C
S56.5		PTR
	08	I74A I74B
	21A	W61A W61B W61C
	Prä	A95C
S56.7		PTR
	08	I74A I74B
	21A	W61A W61B W61C
	Prä	A95C
S56.8		PTR
	08	I74A I74B
	21A	W61A W61B W61C
	Prä	A95C
S57.0		PTR
	15	MSPNG SPNG
	21A	W61A W61B W61C
	21B	X60A X60B X60C
	Prä	A95C
S57.8		PTR
	15	MSPNG SPNG
	21A	W61A W61B W61C
	21B	X60A X60B X60C
	Prä	A95C
S57.9		PTR
	15	MSPNG SPNG
	21A	W61A W61B W61C
	21B	X60A X60B X60C
	Prä	A95C
S58.0		PTR
	21A	W61A W61B W61C
	21B	X60A X60B X60C
	Prä	A95C
S58.1		PTR
	21A	W61A W61B W61C
	21B	X60A X60B X60C
	Prä	A95C
S58.9		PTR
	21A	W61A W61B W61C
	21B	X60A X60B X60C
	Prä	A95C
S59.7		PTR
	21A	W61A W61B W61C
	21B	X05Z X60A X60B
		X60C
	Prä	A95C
S59.8	21B	X60A X60B X60C
S59.9	21B	X60A X60B X60C
S60.0	21B	X60A X60B X60C
S60.1	21B	X60A X60B X60C
S60.2	21B	X60A X60B X60C
S60.7	21B	X60A X60B X60C
S60.9	21B	X60A X60B X60C
S60.81	21B	X60A X60B X60C
S60.82		PTR
	09	J67Z
	21A	W61A W61B W61C
	Prä	A95C
S60.83		PTR
	09	J67Z
	21A	W61A W61B W61C
	Prä	A95C
S60.84		PTR
	09	J65Z
	21A	W61A W61B W61C
	Prä	A95C
S60.86	21B	X60A X60B X60C
S60.88	21B	X60A X60B X60C
S61.0		PTR
	21A	W61A W61B W61C
	21B	X05Z X60A X60B
		X60C
	Prä	A95C
S61.1		PTR
	21A	W61A W61B W61C
	21B	X05Z X60A X60B
		X60C
	Prä	A95C
S61.7		PTR
	21A	W61A W61B W61C
	21B	X60A X60B X60C
	Prä	A95C
S61.9		PTR
	21A	W61A W61B W61C
	21B	X05Z X60A X60B
		X60C
	Prä	A95C
S61.80		PTR
	21A	W61A W61B W61C
	21B	X05Z X60A X60B
		X60C
	Prä	A95C
S61.84	Prä	961Z A95C
	21A	W61A W61B W61C
S61.85	Prä	961Z A95C
	21A	W61A W61B W61C
S61.86	Prä	961Z A95C
	08	I02A I02B I02C
		I08A I08B I13A
		I13B I20A I20C
		I20D I22Z I32C
	21A	W61A W61B W61C
	21B	X01A X07A X07B
S61.87		PTR
	21A	W61A W61B W61C
	Prä	961Z A95C
S61.88		PTR
	08	I02A I02B I02C
		I08A I08B I13A
		I13B I20A I20C
		I20D I22Z I32C
	21A	W61A W61B W61C
	21B	X01A X07A X07B
	Prä	961Z A95C
S61.89		PTR
	08	I02A I02B I02C
		I08A I08B I13A
		I13B I20A I20C
		I20D I22Z I32C
	21A	W61A W61B W61C
	21B	X01A X07A X07B
	Prä	961Z A95C
S62.0		PTR
	08	I74A I74B
	21A	W61A W61B W61C
	Prä	A95C
S62.4		PTR
	08	I02A I02B I02C
		I32A I32B I32C
		I32D I32E I32F
		I74A I74B
	21A	W61A W61B W61C
	Prä	A95C
S62.7		PTR
	08	I02A I02B I02C
		I32A I32B I32C
		I32D I32E I32F
		I74A I74B
	21A	W61A W61B W61C
	Prä	A95C
S62.8		PTR
	08	I02A I02B I02C
		I32A I32B I32C
		I32D I32E I32F
		I74A I74B
	15	MSPNG SPNG
	21A	W61A W61B W61C
	Prä	A95C
S62.10		PTR
	08	I74A I74B
	21A	W61A W61B W61C
	Prä	A95C
S62.11		PTR
	08	I74A I74B
	21A	W61A W61B W61C
	Prä	A95C
S62.12		PTR
	08	I74A I74B
	21A	W61A W61B W61C
	Prä	A95C
S62.13		PTR
	08	I74A I74B
	21A	W61A W61B W61C
	Prä	A95C
S62.14		PTR
	08	I74A I74B
	21A	W61A W61B W61C
	Prä	A95C
S62.15		PTR
	08	I74A I74B
	21A	W61A W61B W61C
	Prä	A95C
S62.16		PTR
	08	I74A I74B
	21A	W61A W61B W61C
	Prä	A95C
S62.17		PTR
	08	I74A I74B
	21A	W61A W61B W61C
	Prä	A95C
S62.19		PTR
	08	I74A I74B
	21A	W61A W61B W61C
	Prä	A95C
S62.20		PTR
	08	I02A I02B I02C
		I32A I32B I32C
		I32D I32E I32F
		I74A I74B
	21A	W61A W61B W61C
	Prä	A95C
S62.21		PTR
	08	I02A I02B I02C
		I32A I32B I32C
		I32D I32E I32F
		I74A I74B
	21A	W61A W61B W61C
	Prä	A95C
S62.22		PTR
	08	I02A I02B I02C
		I32A I32B I32C
		I32D I32E I32F
		I74A I74B

ICD	MDC	DRG
	21A	W61A W61B W61C
	Prä	A95C
S62.23		PTR
	08	I02A I02B I02C
		I32A I32B I32C
		I32D I32E I32F
		I74A I74B
	21A	W61A W61B W61C
	Prä	A95C
S62.24		PTR
	08	I02A I02B I02C
		I32A I32B I32C
		I32D I32E I32F
		I74A I74B
	21A	W61A W61B W61C
	Prä	A95C
S62.30		PTR
	08	I02A I02B I02C
		I32A I32B I32C
		I32D I32E I32F
		I74A I74B
	21A	W61A W61B W61C
	Prä	A95C
S62.31		PTR
	08	I02A I02B I02C
		I32A I32B I32C
		I32D I32E I32F
		I74A I74B
	21A	W61A W61B W61C
	Prä	A95C
S62.32		PTR
	08	I02A I02B I02C
		I32A I32B I32C
		I32D I32E I32F
		I74A I74B
	21A	W61A W61B W61C
	Prä	A95C
S62.33		PTR
	08	I02A I02B I02C
		I32A I32B I32C
		I32D I32E I32F
		I74A I74B
	21A	W61A W61B W61C
	Prä	A95C
S62.34		PTR
	08	I02A I02B I02C
		I32A I32B I32C
		I32D I32E I32F
		I74A I74B
	21A	W61A W61B W61C
	Prä	A95C
S62.50		PTR
	08	I02A I02B I02C
		I32A I32B I32C
		I32D I32E I32F
		I74A I74B
	21A	W61A W61B W61C
	Prä	A95C
S62.51		PTR
	08	I02A I02B I02C
		I32A I32B I32C
		I32D I32E I32F
		I74A I74B
	21A	W61A W61B W61C
	Prä	A95C
S62.52		PTR
	08	I02A I02B I02C
		I32A I32B I32C
		I32D I32E I32F
		I74A I74B

ICD	MDC	DRG
	21A	W61A W61B W61C
	Prä	A95C
S62.60		PTR
	08	I02A I02B I02C
		I32A I32B I32C
		I32D I32E I32F
		I74A I74B
	21A	W61A W61B W61C
	Prä	A95C
S62.61		PTR
	08	I02A I02B I02C
		I32A I32B I32C
		I32D I32E I32F
		I74A I74B
	21A	W61A W61B W61C
	Prä	A95C
S62.62		PTR
	08	I02A I02B I02C
		I32A I32B I32C
		I32D I32E I32F
		I74A I74B
	21A	W61A W61B W61C
	Prä	A95C
S62.63		PTR
	08	I02A I02B I02C
		I32A I32B I32C
		I32D I32E I32F
		I74A I74B
	21A	W61A W61B W61C
	Prä	A95C
S63.00		PTR
	08	I74A I74B
	21A	W61A W61B W61C
	Prä	A95C
S63.01		PTR
	08	I74A I74B
	21A	W61A W61B W61C
	Prä	A95C
S63.02		PTR
	08	I74A I74B
	21A	W61A W61B W61C
	Prä	A95C
S63.2		PTR
	08	I02A I02B I02C
		I32A I32B I32C
		I32D I32E I32F
		I74A I74B
	21A	W61A W61B W61C
	Prä	A95C
S63.03		PTR
	08	I02A I02B I02C
		I32A I32B I32C
		I32D I32E I32F
		I74A I74B
	21A	W61A W61B W61C
	Prä	A95C
S63.3		PTR
	08	I02A I02B I02C
		I32A I32B I32C
		I32D I32E I32F
		I74A I74B
	21A	W61A W61B W61C
	Prä	A95C
S63.04		PTR
	08	I02A I02B I02C
		I32A I32B I32C
		I32D I32E I32F
		I74A I74B
	21A	W61A W61B W61C
	Prä	A95C

ICD	MDC	DRG
S63.4		PTR
	08	I02A I02B I02C
		I32A I32B I32C
		I32D I32E I32F
		I74A I74B
	21A	W61A W61B W61C
	Prä	A95C
S63.7		PTR
	08	I02A I02B I02C
		I32A I32B I32C
		I32D I32E I32F
		I74A I74B
	21A	W61A W61B W61C
	Prä	A95C
S63.08		PTR
	08	I02A I02B I02C
		I32A I32B I32C
		I32D I32E I32F
		I74A I74B
	21A	W61A W61B W61C
	Prä	A95C
S63.10		PTR
	08	I02A I02B I02C
		I32A I32B I32C
		I32D I32E I32F
		I74A I74B
	21A	W61A W61B W61C
	Prä	A95C
S63.11		PTR
	08	I02A I02B I02C
		I32A I32B I32C
		I32D I32E I32F
		I74A I74B
	21A	W61A W61B W61C
	Prä	A95C
S63.12		PTR
	08	I02A I02B I02C
		I32A I32B I32C
		I32D I32E I32F
		I74A I74B
	21A	W61A W61B W61C
	Prä	A95C
S63.50		PTR
	08	I74A I74B
	21A	W61A W61B W61C
	Prä	A95C
S63.51		PTR
	08	I02A I02B I02C
		I32A I32B I32C
		I32D I32E I32F
		I74A I74B
	21A	W61A W61B W61C
	Prä	A95C
S63.52		PTR
	08	I02A I02B I02C
		I32A I32B I32C
		I32D I32E I32F
		I74A I74B
	21A	W61A W61B W61C
	Prä	A95C
S63.53		PTR
	08	I02A I02B I02C
		I32A I32B I32C
		I32D I32E I32F
		I74A I74B
	21A	W61A W61B W61C
	Prä	A95C
S63.58		PTR
	08	I02A I02B I02C
		I32A I32B I32C

DIAG

ICD	MDC	DRG
		I32D I32E I32F
		I74A I74B
	21A	W61A W61B W61C
	Prä	A95C
S63.60		PTR
	08	I02A I02B I02C
		I32A I32B I32C
		I32D I32E I32F
		I74A I74B
	21A	W61A W61B W61C
	Prä	A95C
S63.61		PTR
	08	I02A I02B I02C
		I32A I32B I32C
		I32D I32E I32F
		I74A I74B
	21A	W61A W61B W61C
	Prä	A95C
S63.62		PTR
	08	I02A I02B I02C
		I32A I32B I32C
		I32D I32E I32F
		I74A I74B
	21A	W61A W61B W61C
	Prä	A95C
S63.68		PTR
	08	I02A I02B I02C
		I32A I32B I32C
		I32D I32E I32F
		I74A I74B
	21A	W61A W61B W61C
	Prä	A95C
S64.0		PTR
	01	B82Z
	21A	W61A W61B W61C
	Prä	A95C
S64.1		PTR
	01	B82Z
	21A	W61A W61B W61C
	Prä	A95C
S64.2		PTR
	01	B82Z
	21A	W61A W61B W61C
	Prä	A95C
S64.3		PTR
	01	B82Z
	21A	W61A W61B W61C
	Prä	A95C
S64.4		PTR
	01	B82Z
	21A	W61A W61B W61C
	Prä	A95C
S64.7		PTR
	01	B82Z
	21A	W61A W61B W61C
	Prä	A95C
S64.8		PTR
	01	B82Z
	21A	W61A W61B W61C
	Prä	A95C
S64.9		PTR
	01	B82Z
	21A	W61A W61B W61C
	Prä	A95C
S65.0		PTR
	15	MSPNG SPNG
	21A	W61A W61B W61C
	21B	X60A X60B X60C
	Prä	A95C
S65.1		PTR
	15	MSPNG SPNG
	21A	W61A W61B W61C
	21B	X60A X60B X60C
	Prä	A95C
S65.2		PTR
	15	MSPNG SPNG
	21A	W61A W61B W61C
	21B	X05Z X60A X60B
		X60C
	Prä	A95C
S65.3		PTR
	15	MSPNG SPNG
	21A	W61A W61B W61C
	21B	X05Z X60A X60B
		X60C
	Prä	A95C
S65.4		PTR
	15	MSPNG SPNG
	21A	W61A W61B W61C
	21B	X05Z X60A X60B
		X60C
	Prä	A95C
S65.5		PTR
	15	MSPNG SPNG
	21A	W61A W61B W61C
	21B	X05Z X60A X60B
		X60C
	Prä	A95C
S65.7		PTR
	15	MSPNG SPNG
	21A	W61A W61B W61C
	21B	X60A X60B X60C
	Prä	A95C
S65.8		PTR
	15	MSPNG SPNG
	21A	W61A W61B W61C
	21B	X60A X60B X60C
	Prä	A95C
S65.9		PTR
	15	MSPNG SPNG
	21A	W61A W61B W61C
	21B	X60A X60B X60C
	Prä	A95C
S66.0		PTR
	08	I74A I74B
	21A	W61A W61B W61C
	Prä	A95C
S66.1		PTR
	08	I74A I74B
	21A	W61A W61B W61C
	Prä	A95C
S66.2		PTR
	08	I74A I74B
	21A	W61A W61B W61C
	Prä	A95C
S66.3		PTR
	08	I74A I74B
	21A	W61A W61B W61C
	Prä	A95C
S66.4		PTR
	08	I74A I74B
	21A	W61A W61B W61C
	Prä	A95C
S66.5		PTR
	08	I74A I74B
	21A	W61A W61B W61C
	Prä	A95C
S66.6		PTR
	08	I74A I74B
	21A	W61A W61B W61C
	Prä	A95C
S66.7		PTR
	08	I74A I74B
	21A	W61A W61B W61C
	Prä	A95C
S66.8		PTR
	08	I74A I74B
	21A	W61A W61B W61C
	Prä	A95C
S66.9		PTR
	08	I74A I74B
	21A	W61A W61B W61C
	Prä	A95C
S67.0		PTR
	15	MSPNG SPNG
	21A	W61A W61B W61C
	21B	X05Z X60A X60B
		X60C
	Prä	A95C
S67.8		PTR
	15	MSPNG SPNG
	21A	W61A W61B W61C
	21B	X05Z X60A X60B
		X60C
	Prä	A95C
S68.0		PTR
	21A	W61A W61B W61C
	21B	X05Z X60A X60B
		X60C
	Prä	A95C
S68.1		PTR
	21A	W61A W61B W61C
	21B	X05Z X60A X60B
		X60C
	Prä	A95C
S68.2		PTR
	21A	W61A W61B W61C
	21B	X05Z X60A X60B
		X60C
	Prä	A95C
S68.3		PTR
	21A	W61A W61B W61C
	21B	X60A X60B X60C
	Prä	A95C
S68.4		PTR
	21A	W61A W61B W61C
	21B	X60A X60B X60C
	Prä	A95C
S68.8		PTR
	21A	W61A W61B W61C
	21B	X60A X60B X60C
	Prä	A95C
S68.9		PTR
	21A	W61A W61B W61C
	21B	X60A X60B X60C
	Prä	A95C
S69.7		PTR
	21A	W61A W61B W61C
	21B	X05Z X60A X60B
		X60C
	Prä	A95C
S69.8	21B	X60A X60B X60C
S69.9	21B	X60A X60B X60C
S70.0	21B	X60A X60B X60C
S70.1	15	MSPNG SPNG
	21B	X60A X60B X60C
S70.7	21B	X60A X60B X60C
S70.9		PTR
	09	J02A J02B J03A
		J03B J04Z J65Z

ICD	MDC	DRG
	21A	W61A W61B W61C
	Prä	A95C
S70.81	21B	X60A X60B X60C
S70.82		PTR
	09	J02A J02B J03A
		J03B J04Z J67Z
	21A	W61A W61B W61C
	Prä	A95C
S70.83		PTR
	09	J02A J02B J03A
		J03B J04Z J67Z
	21A	W61A W61B W61C
	Prä	A95C
S70.84		PTR
	09	J02A J02B J03A
		J03B J04Z J65Z
	21A	W61A W61B W61C
	Prä	A95C
S70.86	21B	X60A X60B X60C
S70.88	21B	X60A X60B X60C
S71.0		PTR
	21A	W61A W61B W61C
	21B	X04Z X60A X60B
		X60C
	Prä	A95C
S71.1		PTR
	21A	W61A W61B W61C
	21B	X04Z X60A X60B
		X60C
	Prä	A95C
S71.7		PTR
	21A	W61A W61B W61C
	21B	X04Z X60A X60B
		X60C
	Prä	A95C
S71.80		PTR
	21A	W61A W61B W61C
	21B	X04Z X60A X60B
		X60C
	Prä	A95C
S71.84	Prä	961Z A95C
	21A	W61A W61B W61C
S71.85	Prä	961Z A95C
	21A	W61A W61B W61C
S71.86	Prä	961Z A95C
	08	I02A I02B I02C
		I08A I08B I13A
		I13B I20A I20C
		I20D I22Z I32C
	21A	W61A W61B W61C
	21B	X01A X07A X07B
S71.87		PTR
	21A	W61A W61B W61C
	Prä	961Z A95C
S71.88		PTR
	08	I02A I02B I02C
		I08A I08B I13A
		I13B I20A I20C
		I20D I22Z I32C
	21A	W61A W61B W61C
	21B	X01A X07A X07B
	Prä	961Z A95C
S71.89		PTR
	08	I02A I02B I02C
		I08A I08B I13A
		I13B I20A I20C
		I20D I22Z I32C
	21A	W61A W61B W61C
	21B	X01A X07A X07B
	Prä	961Z A95C

ICD	MDC	DRG
S72.00		PTR
	08	I46B I60A I60B
	21A	W61A W61B W61C
	Prä	A95C B61B B61C
S72.01		PTR
	08	I46B I60A I60B
	21A	W61A W61B W61C
	Prä	A95C B61B B61C
S72.02		PTR
	08	I46B I60A I60B
	21A	W61A W61B W61C
	Prä	A95C B61B B61C
S72.2		PTR
	08	I46B I60A I60B
	21A	W61A W61B W61C
	Prä	A95C B61B B61C
S72.03		PTR
	08	I46B I60A I60B
	21A	W61A W61B W61C
	Prä	A95C B61B B61C
S72.3		PTR
	08	I46B I60A I60B
	15	P65B P66B P66C
		P67A P67B P67C
	21A	W61A W61B W61C
	Prä	A95C B61B B61C
S72.04		PTR
	08	I46B I60A I60B
	21A	W61A W61B W61C
	Prä	A95C B61B B61C
S72.05		PTR
	08	I46B I60A I60B
	21A	W61A W61B W61C
	Prä	A95C B61B B61C
S72.7		PTR
	08	I46B I75A I75B
		I75C
	21A	W61A W61B W61C
	Prä	A95C B61B B61C
S72.08		PTR
	08	I46B I60A I60B
	21A	W61A W61B W61C
	Prä	A95C B61B B61C
S72.8		PTR
	08	I46B I60A I60B
	21A	W61A W61B W61C
	Prä	A95C B61B B61C
S72.9		PTR
	08	I46B I60A I60B
	21A	W61A W61B W61C
	Prä	A95C B61B B61C
S72.10		PTR
	08	I46B I60A I60B
	21A	W61A W61B W61C
	Prä	A95C B61B B61C
S72.11		PTR
	08	I46B I60A I60B
	21A	W61A W61B W61C
	Prä	A95C B61B B61C
S72.40		PTR
	08	I46B I60A I60B
	21A	W61A W61B W61C
	Prä	A95C B61B B61C
S72.41		PTR
	08	I46B I60A I60B
	21A	W61A W61B W61C
	Prä	A95C B61B B61C
S72.42		PTR
	08	I46B I60A I60B
	21A	W61A W61B W61C

ICD	MDC	DRG
	Prä	A95C B61B B61C
S72.43		PTR
	08	I46B I60A I60B
	21A	W61A W61B W61C
	Prä	A95C B61B B61C
S72.44		PTR
	08	I46B I60A I60B
	21A	W61A W61B W61C
	Prä	A95C B61B B61C
S73.00		PTR
	08	I46B I71A
	21A	W61A W61B W61C
	Prä	A95C B61B B61C
S73.01		PTR
	08	I46B I71A
	21A	W61A W61B W61C
	Prä	A95C B61B B61C
S73.02		PTR
	08	I46B I71A
	21A	W61A W61B W61C
	Prä	A95C B61B B61C
S73.08		PTR
	08	I46B I71A
	21A	W61A W61B W61C
	Prä	A95C B61B B61C
S73.10		PTR
	08	I46B I71A I71B
	21A	W61A W61B W61C
	Prä	A95C B61B B61C
S73.11		PTR
	08	I46B I71A I71B
	21A	W61A W61B W61C
	Prä	A95C B61B B61C
S73.12		PTR
	08	I46B I71A I71B
	21A	W61A W61B W61C
	Prä	A95C B61B B61C
S73.18		PTR
	08	I46B I71A I71B
	21A	W61A W61B W61C
	Prä	A95C B61B B61C
S74.0		PTR
	01	B71A B71B B71C
	21A	W61A W61B W61C
	Prä	A95C
S74.1		PTR
	01	B71A B71B B71C
	21A	W61A W61B W61C
	Prä	A95C
S74.2		PTR
	01	B71A B71B B71C
	21A	W61A W61B W61C
	Prä	A95C
S74.7		PTR
	01	B71A B71B B71C
	21A	W61A W61B W61C
	Prä	A95C
S74.8		PTR
	01	B71A B71B B71C
	21A	W61A W61B W61C
	Prä	A95C
S74.9		PTR
	01	B71A B71B B71C
	21A	W61A W61B W61C
	Prä	A95C
S75.0		PTR
	21A	W61A W61B W61C
	21B	X04Z X60A X60B
		X60C
	Prä	A95C

DIAG

ICD	MDC	DRG
S75.1		PTR
	21A	W61A W61B W61C
	21B	X04Z X60A X60B X60C
	Prä	A95C
S75.2		PTR
	21A	W61A W61B W61C
	21B	X04Z X60A X60B X60C
	Prä	A95C
S75.7		PTR
	15	MSPNG SPNG
	21A	W61A W61B W61C
	21B	X04Z X60A X60B X60C
	Prä	A95C
S75.8		PTR
	15	MSPNG SPNG
	21A	W61A W61B W61C
	21B	X04Z X60A X60B X60C
	Prä	A95C
S75.9		PTR
	15	MSPNG SPNG
	21A	W61A W61B W61C
	21B	X04Z X60A X60B X60C
	Prä	A95C
S76.0		PTR
	08	I71A I71B
	21A	W61A W61B W61C
	Prä	A95C
S76.1		PTR
	08	I71A I71B
	21A	W61A W61B W61C
	Prä	A95C
S76.2		PTR
	08	I71A I71B
	21A	W61A W61B W61C
	Prä	A95C
S76.3		PTR
	08	I71A I71B
	21A	W61A W61B W61C
	Prä	A95C
S76.4		PTR
	08	I71A I71B
	21A	W61A W61B W61C
	Prä	A95C
S76.7		PTR
	08	I71A I71B
	21A	W61A W61B W61C
	Prä	A95C
S77.0		PTR
	15	MSPNG SPNG
	21A	W61A W61B W61C
	21B	X04Z X60A X60B X60C
	Prä	A95C
S77.1		PTR
	15	MSPNG SPNG
	21A	W61A W61B W61C
	21B	X04Z X60A X60B X60C
	Prä	A95C
S77.2		PTR
	15	MSPNG SPNG
	21A	W61A W61B W61C
	21B	X04Z X60A X60B X60C
	Prä	A95C
S78.0		PTR
	21A	W61A W61B W61C
	21B	X04Z X60A X60B X60C
	Prä	A95C
S78.1		PTR
	21A	W61A W61B W61C
	21B	X04Z X60A X60B X60C
	Prä	A95C
S78.9		PTR
	21A	W61A W61B W61C
	21B	X04Z X60A X60B X60C
	Prä	A95C
S79.7		PTR
	21A	W61A W61B W61C
	21B	X04Z X60A X60B X60C
	Prä	A95C
S79.8	21B	X60A X60B X60C
S79.9	21B	X60A X60B X60C
S80.0	21B	X60A X60B X60C
S80.1	21B	X60A X60B X60C
S80.7	21B	X60A X60B X60C
S80.9	21B	X60A X60B X60C
S80.81	21B	X60A X60B X60C
S80.82		PTR
	09	J02A J02B J03A J03B J04Z J67Z
	21A	W61A W61B W61C
	Prä	A95C
S80.83		PTR
	09	J02A J02B J03A J03B J04Z J67Z
	21A	W61A W61B W61C
	Prä	A95C
S80.84		PTR
	09	J02A J02B J03A J03B J04Z J65Z
	21A	W61A W61B W61C
	Prä	A95C
S80.86	21B	X60A X60B X60C
S80.88	21B	X60A X60B X60C
S81.0		PTR
	21A	W61A W61B W61C
	21B	X04Z X60A X60B X60C
	Prä	A95C
S81.7		PTR
	21A	W61A W61B W61C
	21B	X04Z X60A X60B X60C
	Prä	A95C
S81.9		PTR
	21A	W61A W61B W61C
	21B	X04Z X60A X60B X60C
	Prä	A95C
S81.80		PTR
	21A	W61A W61B W61C
	21B	X04Z X60A X60B X60C
	Prä	A95C
S81.84	Prä	961Z A95C
	21A	W61A W61B W61C
S81.85	Prä	961Z A95C
	21A	W61A W61B W61C
S81.86	Prä	961Z A95C
	08	I02A I02B I02C I08A I08B I13A I13B I20A I20C I20D I22Z I32C
	21A	W61A W61B W61C
	21B	X01A X07A X07B
S81.87		PTR
	21A	W61A W61B W61C
	Prä	961Z A95C
S81.88		PTR
	08	I02A I02B I02C I08A I08B I13A I13B I20A I20C I20D I22Z I32C
	21A	W61A W61B W61C
	21B	X01A X07A X07B
	Prä	961Z A95C
S81.89		PTR
	08	I02A I02B I02C I08A I08B I13A I13B I20A I20C I20D I22Z I32C
	21A	W61A W61B W61C
	21B	X01A X07A X07B
	Prä	961Z A95C
S82.0		PTR
	08	I77A I77B
	21A	W61A W61B W61C
	Prä	A95C
S82.5		PTR
	08	I77A I77B
	21A	W61A W61B W61C
	Prä	A95C
S82.6		PTR
	08	I77A I77B
	21A	W61A W61B W61C
	Prä	A95C
S82.7		PTR
	08	I77A I77B
	21A	W61A W61B W61C
	Prä	A95C
S82.9		PTR
	08	I77A I77B
	21A	W61A W61B W61C
	Prä	A95C
S82.11		PTR
	08	I75A I75B I75C
	15	MSPNG SPNG
	21A	W61A W61B W61C
	Prä	A95C
S82.18		PTR
	08	I75A I75B I75C
	21A	W61A W61B W61C
	Prä	A95C
S82.21		PTR
	08	I75A I75B I75C
	21A	W61A W61B W61C
	Prä	A95C
S82.28		PTR
	08	I75A I75B I75C
	21A	W61A W61B W61C
	Prä	A95C
S82.31		PTR
	08	I75A I75B I75C
	21A	W61A W61B W61C
	Prä	A95C
S82.38		PTR
	08	I77A I77B
	21A	W61A W61B W61C
	Prä	A95C
S82.40		PTR

ICD	MDC	DRG
	08	I77A I77B
	21A	W61A W61B W61C
	Prä	A95C
S82.41		PTR
	08	I77A I77B
	15	MSPNG SPNG
	21A	W61A W61B W61C
	Prä	A95C
S82.42		PTR
	08	I77A I77B
	21A	W61A W61B W61C
	Prä	A95C
S82.49		PTR
	08	I77A I77B
	21A	W61A W61B W61C
	Prä	A95C
S82.81		PTR
	08	I77A I77B
	21A	W61A W61B W61C
	Prä	A95C
S82.82		PTR
	08	I75A I75B I75C
	21A	W61A W61B W61C
	Prä	A95C
S82.88		PTR
	08	I77A I77B
	21A	W61A W61B W61C
	Prä	A95C
S83.0		PTR
	08	I77A I77B
	21A	W61A W61B W61C
	Prä	A95C
S83.2		PTR
	08	I77A I77B
	21A	W61A W61B W61C
	Prä	A95C
S83.3		PTR
	08	I77A I77B
	21A	W61A W61B W61C
	Prä	A95C
S83.6		PTR
	08	I77A I77B
	21A	W61A W61B W61C
	Prä	A95C
S83.7		PTR
	08	I77A I77B
	21A	W61A W61B W61C
	Prä	A95C
S83.10		PTR
	08	I75A I75B I75C
	21A	W61A W61B W61C
	Prä	A95C
S83.11		PTR
	08	I77A I77B
	21A	W61A W61B W61C
	Prä	A95C
S83.12		PTR
	08	I77A I77B
	21A	W61A W61B W61C
	Prä	A95C
S83.13		PTR
	08	I77A I77B
	21A	W61A W61B W61C
	Prä	A95C
S83.14		PTR
	08	I77A I77B
	21A	W61A W61B W61C
	Prä	A95C
S83.18		PTR
	08	I75A I75B I75C
	21A	W61A W61B W61C
	Prä	A95C
S83.40		PTR
	08	I77A I77B
	21A	W61A W61B W61C
	Prä	A95C
S83.41		PTR
	08	I77A I77B
	21A	W61A W61B W61C
	Prä	A95C
S83.42		PTR
	08	I77A I77B
	21A	W61A W61B W61C
	Prä	A95C
S83.43		PTR
	08	I77A I77B
	21A	W61A W61B W61C
	Prä	A95C
S83.44		PTR
	08	I77A I77B
	21A	W61A W61B W61C
	Prä	A95C
S83.50		PTR
	08	I77A I77B
	21A	W61A W61B W61C
	Prä	A95C
S83.51		PTR
	08	I77A I77B
	21A	W61A W61B W61C
	Prä	A95C
S83.52		PTR
	08	I77A I77B
	21A	W61A W61B W61C
	Prä	A95C
S83.53		PTR
	08	I77A I77B
	21A	W61A W61B W61C
	Prä	A95C
S83.54		PTR
	08	I77A I77B
	21A	W61A W61B W61C
	Prä	A95C
S84.0		PTR
	01	B71A B71B B71C
	21A	W61A W61B W61C
	Prä	A95C
S84.1		PTR
	01	B71A B71B B71C
	21A	W61A W61B W61C
	Prä	A95C
S84.2		PTR
	01	B71A B71B B71C
	21A	W61A W61B W61C
	Prä	A95C
S84.7		PTR
	01	B71A B71B B71C
	21A	W61A W61B W61C
	Prä	A95C
S84.8		PTR
	01	B71A B71B B71C
	21A	W61A W61B W61C
	Prä	A95C
S84.9		PTR
	01	B71A B71B B71C
	21A	W61A W61B W61C
	Prä	A95C
S85.0		PTR
	21A	W61A W61B W61C
	21B	X04Z X60A X60B
		X60C
	Prä	A95C
S85.1		PTR
	15	MSPNG SPNG
	21A	W61A W61B W61C
	21B	X04Z X60A X60B
		X60C
	Prä	A95C
S85.2		PTR
	15	MSPNG SPNG
	21A	W61A W61B W61C
	21B	X04Z X60A X60B
		X60C
	Prä	A95C
S85.3		PTR
	21A	W61A W61B W61C
	21B	X04Z X60A X60B
		X60C
	Prä	A95C
S85.4		PTR
	21A	W61A W61B W61C
	21B	X04Z X60A X60B
		X60C
	Prä	A95C
S85.5		PTR
	21A	W61A W61B W61C
	21B	X04Z X60A X60B
		X60C
	Prä	A95C
S85.7		PTR
	15	MSPNG SPNG
	21A	W61A W61B W61C
	21B	X04Z X60A X60B
		X60C
	Prä	A95C
S85.8		PTR
	21A	W61A W61B W61C
	21B	X04Z X60A X60B
		X60C
	Prä	A95C
S85.9		PTR
	15	MSPNG SPNG
	21A	W61A W61B W61C
	21B	X04Z X60A X60B
		X60C
	Prä	A95C
S86.0		PTR
	08	I77A I77B
	21A	W61A W61B W61C
	Prä	A95C
S86.1		PTR
	08	I77A I77B
	21A	W61A W61B W61C
	Prä	A95C
S86.2		PTR
	08	I77A I77B
	21A	W61A W61B W61C
	Prä	A95C
S86.3		PTR
	08	I77A I77B
	21A	W61A W61B W61C
	Prä	A95C
S86.7		PTR
	08	I77A I77B
	21A	W61A W61B W61C
	Prä	A95C
S86.8		PTR
	08	I77A I77B
	21A	W61A W61B W61C
	Prä	A95C
S86.9		PTR

DIAG

ICD	MDC	DRG
	08	I77A I77B
	21A	W61A W61B W61C
	Prä	A95C
S87.0		PTR
	15	MSPNG SPNG
	21A	W61A W61B W61C
	21B	X04Z X60A X60B X60C
	Prä	A95C
S87.8		PTR
	15	MSPNG SPNG
	21A	W61A W61B W61C
	21B	X04Z X60A X60B X60C
	Prä	A95C
S88.0		PTR
	21A	W61A W61B W61C
	21B	X04Z X60A X60B X60C
	Prä	A95C
S88.1		PTR
	21A	W61A W61B W61C
	21B	X04Z X60A X60B X60C
	Prä	A95C
S88.9		PTR
	21A	W61A W61B W61C
	21B	X04Z X60A X60B X60C
	Prä	A95C
S89.7		PTR
	21A	W61A W61B W61C
	21B	X04Z X60A X60B X60C
	Prä	A95C
S89.8	21B	X60A X60B X60C
S89.9	21B	X60A X60B X60C
S90.0	21B	X60A X60B X60C
S90.1	21B	X60A X60B X60C
S90.2	21B	X60A X60B X60C
S90.3	21B	X60A X60B X60C
S90.7	21B	X60A X60B X60C
S90.9	21B	X60A X60B X60C
S90.81	21B	X60A X60B X60C
S90.82		PTR
	09	J02A J02B J03A J03B J04Z J67Z
	21A	W61A W61B W61C
	Prä	A95C
S90.83		PTR
	09	J02A J02B J03A J03B J04Z J67Z
	21A	W61A W61B W61C
	Prä	A95C
S90.84		PTR
	09	J02A J02B J03A J03B J04Z J65Z
	21A	W61A W61B W61C
	Prä	A95C
S90.86	21B	X60A X60B X60C
S90.88	21B	X60A X60B X60C
S91.0		PTR
	21A	W61A W61B W61C
	21B	X04Z X60A X60B X60C
	Prä	A95C
S91.1		PTR
	21A	W61A W61B W61C
	21B	X04Z X60A X60B X60C
	Prä	A95C
S91.2		PTR
	21A	W61A W61B W61C
	21B	X04Z X60A X60B X60C
	Prä	A95C
S91.3		PTR
	21A	W61A W61B W61C
	21B	X04Z X60A X60B X60C
	Prä	A95C
S91.7		PTR
	21A	W61A W61B W61C
	21B	X04Z X60A X60B X60C
	Prä	A95C
S91.80		PTR
	21A	W61A W61B W61C
	21B	X04Z X60A X60B X60C
	Prä	A95C
S91.84	Prä	961Z A95C
	21A	W61A W61B W61C
S91.85	Prä	961Z A95C
	21A	W61A W61B W61C
S91.86	Prä	961Z A95C
	08	I02A I02B I02C I08A I08B I13A I13B I20A I20C I20D I22Z I32C
	21A	W61A W61B W61C
	21B	X01A X07A X07B
S91.87		PTR
	21A	W61A W61B W61C
	Prä	961Z A95C
S91.88		PTR
	08	I02A I02B I02C I08A I08B I13A I13B I20A I20C I20D I22Z I32C
	21A	W61A W61B W61C
	21B	X01A X07A X07B
	Prä	961Z A95C
S91.89		PTR
	08	I02A I02B I02C I08A I08B I13A I13B I20A I20C I20D I22Z I32C
	21A	W61A W61B W61C
	21B	X01A X07A X07B
	Prä	961Z A95C
S92.0		PTR
	08	I20D I77A I77B
	21A	W61A W61B W61C
	Prä	A95C
S92.1		PTR
	08	I74A I74B
	21A	W61A W61B W61C
	Prä	A95C
S92.3		PTR
	08	I74A I74B
	21A	W61A W61B W61C
	Prä	A95C
S92.4		PTR
	08	I74A I74B
	21A	W61A W61B W61C
	Prä	A95C
S92.5		PTR
	08	I74A I74B
	21A	W61A W61B W61C
	Prä	A95C
S92.7		PTR
	08	I74A I74B
	21A	W61A W61B W61C
	Prä	A95C
S92.9		PTR
	08	I74A I74B
	21A	W61A W61B W61C
	Prä	A95C
S92.20		PTR
	08	I74A I74B
	21A	W61A W61B W61C
	Prä	A95C
S92.21		PTR
	08	I74A I74B
	21A	W61A W61B W61C
	Prä	A95C
S92.22		PTR
	08	I74A I74B
	21A	W61A W61B W61C
	Prä	A95C
S92.23		PTR
	08	I74A I74B
	21A	W61A W61B W61C
	Prä	A95C
S92.28		PTR
	08	I74A I74B
	21A	W61A W61B W61C
	Prä	A95C
S93.0		PTR
	08	I77A I77B
	21A	W61A W61B W61C
	Prä	A95C
S93.2		PTR
	08	I77A I77B
	21A	W61A W61B W61C
	Prä	A95C
S93.5		PTR
	08	I74A I74B
	21A	W61A W61B W61C
	Prä	A95C
S93.6		PTR
	08	I74A I74B
	21A	W61A W61B W61C
	Prä	A95C
S93.10		PTR
	08	I74A I74B
	21A	W61A W61B W61C
	Prä	A95C
S93.11		PTR
	08	I74A I74B
	21A	W61A W61B W61C
	Prä	A95C
S93.12		PTR
	08	I74A I74B
	21A	W61A W61B W61C
	Prä	A95C
S93.30		PTR
	08	I74A I74B
	21A	W61A W61B W61C
	Prä	A95C
S93.31		PTR
	08	I74A I74B
	21A	W61A W61B W61C
	Prä	A95C
S93.32		PTR
	08	I74A I74B
	21A	W61A W61B W61C
	Prä	A95C
S93.33		PTR

ICD	MDC	DRG
	08	I74A I74B
	21A	W61A W61B W61C
	Prä	A95C
S93.34		PTR
	08	I74A I74B
	21A	W61A W61B W61C
	Prä	A95C
S93.38		PTR
	08	I74A I74B
	21A	W61A W61B W61C
	Prä	A95C
S93.40		PTR
	08	I77A I77B
	21A	W61A W61B W61C
	Prä	A95C
S93.41		PTR
	08	I77A I77B
	21A	W61A W61B W61C
	Prä	A95C
S93.42		PTR
	08	I77A I77B
	21A	W61A W61B W61C
	Prä	A95C
S93.43		PTR
	08	I77A I77B
	21A	W61A W61B W61C
	Prä	A95C
S93.48		PTR
	08	I77A I77B
	21A	W61A W61B W61C
	Prä	A95C
S94.0		PTR
	01	B71A B71B B71C
	21A	W61A W61B W61C
	Prä	A95C
S94.1		PTR
	01	B71A B71B B71C
	21A	W61A W61B W61C
	Prä	A95C
S94.2		PTR
	01	B71A B71B B71C
	21A	W61A W61B W61C
	Prä	A95C
S94.3		PTR
	01	B71A B71B B71C
	21A	W61A W61B W61C
	Prä	A95C
S94.7		PTR
	01	B71A B71B B71C
	21A	W61A W61B W61C
	Prä	A95C
S94.8		PTR
	01	B71A B71B B71C
	21A	W61A W61B W61C
	Prä	A95C
S94.9		PTR
	01	B71A B71B B71C
	21A	W61A W61B W61C
	Prä	A95C
S95.0		PTR
	15	MSPNG SPNG
	21A	W61A W61B W61C
	21B	X04Z X60A X60B
		X60C
	Prä	A95C
S95.1		PTR
	15	MSPNG SPNG
	21A	W61A W61B W61C
	21B	X04Z X60A X60B
		X60C
	Prä	A95C
S95.2		PTR
	15	MSPNG SPNG
	21A	W61A W61B W61C
	21B	X04Z X60A X60B
		X60C
	Prä	A95C
S95.7		PTR
	15	MSPNG SPNG
	21A	W61A W61B W61C
	21B	X04Z X60A X60B
		X60C
	Prä	A95C
S95.8		PTR
	15	MSPNG SPNG
	21A	W61A W61B W61C
	21B	X04Z X60A X60B
		X60C
	Prä	A95C
S95.9		PTR
	15	MSPNG SPNG
	21A	W61A W61B W61C
	21B	X04Z X60A X60B
		X60C
	Prä	A95C
S96.0		PTR
	08	I74A I74B
	21A	W61A W61B W61C
	Prä	A95C
S96.1		PTR
	08	I74A I74B
	21A	W61A W61B W61C
	Prä	A95C
S96.2		PTR
	08	I74A I74B
	21A	W61A W61B W61C
	Prä	A95C
S96.7		PTR
	08	I74A I74B
	21A	W61A W61B W61C
	Prä	A95C
S96.8		PTR
	08	I74A I74B
	21A	W61A W61B W61C
	Prä	A95C
S96.9		PTR
	08	I77A I77B
	21A	W61A W61B W61C
	Prä	A95C
S97.0		PTR
	15	MSPNG SPNG
	21A	W61A W61B W61C
	21B	X04Z X60A X60B
		X60C
	Prä	A95C
S97.1		PTR
	15	MSPNG SPNG
	21A	W61A W61B W61C
	21B	X04Z X60A X60B
		X60C
	Prä	A95C
S97.8		PTR
	15	MSPNG SPNG
	21A	W61A W61B W61C
	21B	X04Z X60A X60B
		X60C
	Prä	A95C
S98.0		PTR
	21A	W61A W61B W61C
	21B	X04Z X60A X60B
		X60C
	Prä	A95C
S98.1		PTR
	21A	W61A W61B W61C
	21B	X04Z X60A X60B
		X60C
	Prä	A95C
S98.2		PTR
	21A	W61A W61B W61C
	21B	X04Z X60A X60B
		X60C
	Prä	A95C
S98.3		PTR
	21A	W61A W61B W61C
	21B	X04Z X60A X60B
		X60C
	Prä	A95C
S98.4		PTR
	21A	W61A W61B W61C
	21B	X04Z X60A X60B
		X60C
	Prä	A95C
S99.7		PTR
	21A	W61A W61B W61C
	21B	X04Z X60A X60B
		X60C
	Prä	A95C
S99.8	21B	X60A X60B X60C
S99.9	21B	X60A X60B X60C
T00.0	21B	X60A X60B X60C
T00.1	21B	X60A X60B X60C
T00.2	21B	X60A X60B X60C
T00.3	21B	X60A X60B X60C
T00.6	21B	X60A X60B X60C
T00.8	21B	X60A X60B X60C
T00.9	21B	X60A X60B X60C
T01.0	Prä	A95C
	21A	W61A W61B W61C
	21B	X60A X60B X60C
T01.1	Prä	A95C
	21A	W61A W61B W61C
	21B	X60A X60B X60C
T01.2	Prä	A95C
	21A	W61A W61B W61C
	21B	X60A X60B X60C
T01.3	Prä	A95C
	21A	W61A W61B W61C
	21B	X04Z X60A X60B
		X60C
T01.6	Prä	A95C
	21A	W61A W61B W61C
	21B	X60A X60B X60C
T01.8	Prä	A95C
	21A	W61A W61B W61C
	21B	X60A X60B X60C
T01.9	Prä	A95C
	21A	W61A W61B W61C
	21B	X60A X60B X60C
T02.00	Prä	A95C
	01	B79Z B86B
	21A	W61A W61B W61C
T02.01	Prä	A95C
	01	B79Z B86B
	21A	W61A W61B W61C
T02.10	Prä	A95C
	08	I76A I76B
	21A	W61A W61B W61C
T02.11	Prä	A95C
	08	I76A I76B
	21A	W61A W61B W61C

DIAG

ICD	MDC	DRG
T02.20	Prä	A95C
	08	I77A I77B
	21A	W61A W61B W61C
T02.21	Prä	A95C
	08	I77A I77B
	21A	W61A W61B W61C
T02.30	Prä	A95C
	08	I77A I77B
	21A	W61A W61B W61C
T02.31	Prä	A95C
	08	I77A I77B
	21A	W61A W61B W61C
T02.40	Prä	A95C
	21A	W61A W61B W61C
	21B	X60A X60B X60C
T02.41	Prä	A95C
	21A	W61A W61B W61C
	21B	X60A X60B X60C
T02.50	Prä	A95C
	21A	W61A W61B W61C
	21B	X60A X60B X60C
T02.51	Prä	A95C
	21A	W61A W61B W61C
	21B	X60A X60B X60C
T02.60	Prä	A95C
	21A	W61A W61B W61C
	21B	X60A X60B X60C
T02.61	Prä	A95C
	21A	W61A W61B W61C
	21B	X60A X60B X60C
T02.70	Prä	A95C
	21A	W61A W61B W61C
	21B	X60A X60B X60C
T02.71	Prä	A95C
	21A	W61A W61B W61C
	21B	X60A X60B X60C
T02.80	Prä	A95C
	08	I76A I76B
	21A	W61A W61B W61C
T02.81	Prä	A95C
	08	I76A I76B
	21A	W61A W61B W61C
T02.90	Prä	A95C
	08	I76A I76B
	21A	W61A W61B W61C
T02.91	Prä	A95C
	08	I76A I76B
	21A	W61A W61B W61C
T03.0	Prä	A95C
	08	I76A I76B
	21A	W61A W61B W61C
T03.1	Prä	A95C
	08	I76A I76B
	21A	W61A W61B W61C
T03.2	Prä	A95C
	08	I76A I76B
	21A	W61A W61B W61C
T03.3	Prä	A95C
	08	I76A I76B
	21A	W61A W61B W61C
T03.4	Prä	A95C
	08	I76A I76B
	21A	W61A W61B W61C
T03.8	Prä	A95C
	08	I76A I76B
	21A	W61A W61B W61C
T03.9	Prä	A95C
	08	I76A I76B
	21A	W61A W61B W61C
T04.0	15	MSPNG SPNG
	21A	W61A W61B W61C
	21B	X60A X60B X60C
	Prä	A95C
T04.1	15	MSPNG SPNG
	21A	W61A W61B W61C
	21B	X60A X60B X60C
	Prä	A95C
T04.2	15	MSPNG SPNG
	21A	W61A W61B W61C
	21B	X60A X60B X60C
	Prä	A95C
T04.3	15	MSPNG SPNG
	21A	W61A W61B W61C
	21B	X04Z X60A X60B
		X60C
	Prä	A95C
T04.4	15	MSPNG SPNG
	21A	W61A W61B W61C
	21B	X60A X60B X60C
	Prä	A95C
T04.7	15	MSPNG SPNG
	21A	W61A W61B W61C
	21B	X60A X60B X60C
	Prä	A95C
T04.8	15	MSPNG SPNG
	21A	W61A W61B W61C
	21B	X60A X60B X60C
	Prä	A95C
T04.9	15	MSPNG SPNG
	21A	W61A W61B W61C
	21B	X60A X60B X60C
	Prä	A95C
T05.0		PTR
	21A	W61A W61B W61C
	21B	X60A X60B X60C
	Prä	A95C
T05.1		PTR
	21A	W61A W61B W61C
	21B	X60A X60B X60C
	Prä	A95C
T05.2		PTR
	21A	W61A W61B W61C
	21B	X60A X60B X60C
	Prä	A95C
T05.3		PTR
	21A	W61A W61B W61C
	21B	X60A X60B X60C
	Prä	A95C
T05.4		PTR
	21A	W61A W61B W61C
	21B	X60A X60B X60C
	Prä	A95C
T05.5		PTR
	21A	W61A W61B W61C
	21B	X60A X60B X60C
	Prä	A95C
T05.6		PTR
	21A	W61A W61B W61C
	21B	X60A X60B X60C
	Prä	A95C
T05.8		PTR
	15	MSPNG SPNG
	21A	W61A W61B W61C
	21B	X60A X60B X60C
	Prä	A95C
T05.9		PTR
	21A	W61A W61B W61C
	21B	X60A X60B X60C
	Prä	A95C
T06.0		PTR
	01	B81A B81B B81C
	15	MSPNG SPNG
	21A	W61A W61B W61C
	Prä	A95C
T06.1		PTR
	01	B81A B81B B81C
	15	MSPNG SPNG
	21A	W61A W61B W61C
	Prä	A95C
T06.2		PTR
	01	B71A B71B B71C
	21A	W61A W61B W61C
	Prä	A95C
T06.3		PTR
	15	MSPNG SPNG
	21A	W61A W61B W61C
	21B	X60A X60B X60C
	Prä	A95C
T06.4		PTR
	08	I76A I76B
	21A	W61A W61B W61C
	Prä	A95C
T06.5		PTR
	21A	W61A W61B W61C
	21B	X60A X60B X60C
	Prä	A95C
T06.8		PTR
	21A	W61A W61B W61C
	21B	X60A X60B X60C
	Prä	A95C
T07	21B	X60A X60B X60C
T08.0		PTR
	08	I68A I68B I68C
		I68D
	15	MSPNG SPNG
	21A	W61A W61B W61C
	Prä	A95C
T08.1		PTR
	08	I68A I68B I68C
		I68D
	15	MSPNG SPNG
	21A	W61A W61B W61C
	Prä	A95C
T09.00	21B	X60A X60B X60C
T09.01	21B	X60A X60B X60C
T09.1		PTR
	15	MSPNG SPNG
	21A	W61A W61B W61C
	21B	X60A X60B X60C
	Prä	A95C
T09.02	21B	X60A X60B X60C
T09.2		PTR
	08	I68A I68B I68C
		I68D
	21A	W61A W61B W61C
	Prä	A95C
T09.03	21B	X60A X60B X60C
T09.04	21B	X60A X60B X60C
T09.4		PTR
	01	B71A B71B B71C
	15	MSPNG SPNG
	21A	W61A W61B W61C
	Prä	A95C
T09.05	21B	X60A X60B X60C
T09.5		PTR
	08	I76A I76B
	21A	W61A W61B W61C
	Prä	A95C
T09.6		PTR
	15	MSPNG SPNG

ICD	MDC	DRG
	21A	W61A W61B W61C
	21B	X60A X60B X60C
	Prä	A95C
T09.08	21B	X60A X60B X60C
T09.8	21B	X60A X60B X60C
T09.9	21B	X60A X60B X60C
T10.0		PTR
	08	I77A I77B
	21A	W61A W61B W61C
	Prä	A95C
T10.1		PTR
	08	I77A I77B
	21A	W61A W61B W61C
	Prä	A95C
T11.00	21B	X60A X60B X60C
T11.01	21B	X60A X60B X60C
T11.1		PTR
	21A	W61A W61B W61C
	21B	X60A X60B X60C
	Prä	A95C
T11.02	21B	X60A X60B X60C
T11.2		PTR
	08	I76A I76B
	21A	W61A W61B W61C
	Prä	A95C
T11.03	21B	X60A X60B X60C
T11.3		PTR
	01	B71A B71B B71C
	21A	W61A W61B W61C
	Prä	A95C
T11.04	21B	X60A X60B X60C
T11.4		PTR
	15	MSPNG SPNG
	21A	W61A W61B W61C
	21B	X60A X60B X60C
	Prä	A95C
T11.05	21B	X60A X60B X60C
T11.5		PTR
	08	I77A I77B
	21A	W61A W61B W61C
	Prä	A95C
T11.6		PTR
	21A	W61A W61B W61C
	21B	X60A X60B X60C
	Prä	A95C
T11.08	21B	X60A X60B X60C
T11.8	21B	X60A X60B X60C
T11.9	21B	X60A X60B X60C
T12.0		PTR
	08	I77A I77B
	21A	W61A W61B W61C
	Prä	A95C
T12.1		PTR
	08	I77A I77B
	21A	W61A W61B W61C
	Prä	A95C
T13.00	21B	X60A X60B X60C
T13.01	21B	X60A X60B X60C
T13.1		PTR
	21A	W61A W61B W61C
	21B	X04Z X60A X60B X60C
	Prä	A95C
T13.02	21B	X60A X60B X60C
T13.2		PTR
	08	I76A I76B
	21A	W61A W61B W61C
	Prä	A95C
T13.03	21B	X60A X60B X60C
T13.3	01	B71A B71B B71C
T13.04	21B	X60A X60B X60C
T13.4		PTR
	15	MSPNG SPNG
	21A	W61A W61B W61C
	21B	X04Z X60A X60B X60C
	Prä	A95C
T13.05	21B	X60A X60B X60C
T13.5		PTR
	08	I77A I77B
	21A	W61A W61B W61C
	Prä	A95C
T13.6		PTR
	21A	W61A W61B W61C
	21B	X04Z X60A X60B X60C
	Prä	A95C
T13.08	21B	X60A X60B X60C
T13.8	21B	X60A X60B X60C
T13.9	21B	X60A X60B X60C
T14.00	21B	X60A X60B X60C
T14.01	21B	X60A X60B X60C
T14.1		PTR
	21A	W61A W61B W61C
	21B	X60A X60B X60C
	Prä	A95C
T14.02	21B	X60A X60B X60C
T14.03	21B	X60A X60B X60C
T14.3		PTR
	08	I76A I76B
	21A	W61A W61B W61C
	Prä	A95C
T14.04	21B	X60A X60B X60C
T14.4		PTR
	01	B71A B71B B71C B81A B81B B81C
	21A	W61A W61B W61C
	Prä	A95C
T14.05	21B	X60A X60B X60C
T14.5		PTR
	15	MSPNG SPNG
	21A	W61A W61B W61C
	21B	X60A X60B X60C
	Prä	A95C
T14.6		PTR
	08	I76A I76B
	21A	W61A W61B W61C
	Prä	A95C
T14.7		PTR
	15	MSPNG SPNG
	21A	W61A W61B W61C
	21B	X60A X60B X60C
	Prä	A95C
T14.08	21B	X60A X60B X60C
T14.8	21B	X60A X60B X60C
T14.9	21B	X60A X60B X60C
T14.20		PTR
	08	I76A I76B
	21A	W61A W61B W61C
	Prä	A95C
T14.21		PTR
	08	I76A I76B
	21A	W61A W61B W61C
	Prä	A95C
T15.0	02	C62Z
T15.1	02	C62Z
T15.8	02	C62Z
T15.9	02	C62Z
T16	03	D66A D66B
T17.0	03	D65Z
T17.1	03	D65Z
T17.2	03	D66A D66B
T17.3	03	D66A D66B
T17.4	04	E75A E75B E75C
T17.5	04	E75A E75B E75C
T17.8	04	E75A E75B E75C
T17.9	04	E75A E75B E75C
T18.0	03	D40Z D67A D67B
T18.1	06	G72A G72B
T18.2	06	G72A G72B
T18.3	06	G72A G72B
T18.4	06	G72A G72B
T18.5	06	G72A G72B
T18.8	06	G72A G72B
T18.9	06	G72A G72B
T19.0	11	L68A L68B L68C
T19.1	11	L68A L68B L68C
T19.2	13	N62A N62B
T19.3	13	N62A N62B
T19.8	11	L64A L64B
T19.9	11	L64A L64B
T20.0		VB
	22	Y62A Y62B
T20.1		VB
	22	Y62A Y62B
T20.3		SVB VB
	15	MSPNG SPNG
	22	Y02B Y62A Y62B
T20.4		VB
	22	Y62A Y62B
T20.5		VB
	22	Y62A Y62B
T20.7		SVB VB
	15	MSPNG SPNG
	22	Y02B Y62A Y62B
T20.20		VB
	22	Y02B Y62A Y62B
T20.21		SVB VB
	22	Y02B Y62A Y62B
T20.60		VB
	22	Y02B Y62A Y62B
T20.61		SVB VB
	22	Y02B Y62A Y62B
T21.00		VB
	22	Y62A Y62B
T21.01		VB
	22	Y62A Y62B
T21.02		VB
	22	Y62A Y62B
T21.03		VB
	22	Y62A Y62B
T21.04		VB
	22	Y62A Y62B
T21.05		VB
	22	Y62A Y62B
T21.09		VB
	22	Y62A Y62B
T21.10		VB
	22	Y62A Y62B
T21.11		VB
	22	Y62A Y62B
T21.12		VB
	22	Y62A Y62B
T21.13		VB
	22	Y62A Y62B
T21.14		VB
	22	Y62A Y62B
T21.15		VB
	22	Y62A Y62B
T21.19		VB

DIAG

ICD	MDC	DRG
	22	Y62A Y62B
T21.20		VB
	22	Y02B Y62A Y62B
T21.21		VB
	22	Y02B Y62A Y62B
T21.22		VB
	22	Y02B Y62A Y62B
T21.23		VB
	22	Y02B Y62A Y62B
T21.24		VB
	15	P65B P66B P66C
		P67A P67B P67C
	22	Y02B Y62A Y62B
T21.25		VB
	22	Y02B Y62A Y62B
T21.29		VB
	22	Y02B Y62A Y62B
T21.30		VB
	15	MSPNG SPNG
	22	Y02B Y62A Y62B
T21.31		SVB VB
	15	MSPNG SPNG
	22	Y02B Y62A Y62B
T21.32		SVB VB
	15	MSPNG SPNG
	22	Y02B Y62A Y62B
T21.33		SVB VB
	15	MSPNG SPNG
	22	Y02B Y62A Y62B
T21.34		SVB VB
	15	MSPNG SPNG
	22	Y02B Y62A Y62B
T21.35		SVB VB
	15	MSPNG SPNG
	22	Y02B Y62A Y62B
T21.39		SVB VB
	15	MSPNG SPNG
	22	Y02B Y62A Y62B
T21.40		VB
	22	Y62A Y62B
T21.41		VB
	22	Y62A Y62B
T21.42		VB
	22	Y62A Y62B
T21.43		VB
	22	Y62A Y62B
T21.44		VB
	22	Y62A Y62B
T21.45		VB
	22	Y62A Y62B
T21.49		VB
	22	Y62A Y62B
T21.50		VB
	22	Y62A Y62B
T21.51		VB
	22	Y62A Y62B
T21.52		VB
	22	Y62A Y62B
T21.53		VB
	22	Y62A Y62B
T21.54		VB
	22	Y62A Y62B
T21.55		VB
	22	Y62A Y62B
T21.59		VB
	22	Y62A Y62B
T21.60		VB
	22	Y02B Y62A Y62B
T21.61		VB
	22	Y02B Y62A Y62B
T21.62		VB
	22	Y02B Y62A Y62B
T21.63		VB
	22	Y02B Y62A Y62B
T21.64		VB
	15	P65B P66B P66C
		P67A P67B P67C
	22	Y02B Y62A Y62B
T21.65		VB
	22	Y02B Y62A Y62B
T21.69		VB
	22	Y02B Y62A Y62B
T21.70		VB
	15	MSPNG SPNG
	22	Y02B Y62A Y62B
T21.71		SVB VB
	15	MSPNG SPNG
	22	Y02B Y62A Y62B
T21.72		SVB VB
	15	MSPNG SPNG
	22	Y02B Y62A Y62B
T21.73		SVB VB
	15	MSPNG SPNG
	22	Y02B Y62A Y62B
T21.74		SVB VB
	15	MSPNG SPNG
	22	Y02B Y62A Y62B
T21.75		SVB VB
	15	MSPNG SPNG
	22	Y02B Y62A Y62B
T21.79		SVB VB
	15	MSPNG SPNG
	22	Y02B Y62A Y62B
T21.81		SVB VB
	22	Y02B Y62A Y62B
T21.82		SVB VB
	22	Y02B Y62A Y62B
T21.83		SVB VB
	22	Y02B Y62A Y62B
T21.84		SVB VB
	15	P65B P66B P66C
		P67A P67B P67C
	22	Y02B Y62A Y62B
T21.85		SVB VB
	22	Y02B Y62A Y62B
T21.89		SVB VB
	22	Y02B Y62A Y62B
T21.91		SVB VB
	22	Y02B Y62A Y62B
T21.92		SVB VB
	22	Y02B Y62A Y62B
T21.93		SVB VB
	22	Y02B Y62A Y62B
T21.94		SVB VB
	15	P65B P66B P66C
		P67A P67B P67C
	22	Y02B Y62A Y62B
T21.95		SVB VB
	22	Y02B Y62A Y62B
T21.99		SVB VB
	22	Y02B Y62A Y62B
T22.00		VB
	22	Y62A Y62B
T22.01		VB
	22	Y62A Y62B
T22.02		VB
	22	Y62A Y62B
T22.03		VB
	22	Y62A Y62B
T22.10		VB
	22	Y62A Y62B
T22.11		VB
	22	Y62A Y62B
T22.12		VB
	22	Y62A Y62B
T22.13		VB
	22	Y62A Y62B
T22.20		VB
	22	Y02B Y62A Y62B
T22.21		VB
	22	Y02B Y62A Y62B
T22.22		VB
	22	Y02B Y62A Y62B
T22.23		VB
	22	Y02B Y62A Y62B
T22.30		SVB VB
	15	MSPNG SPNG
	22	Y02B Y62A Y62B
T22.31		SVB VB
	15	MSPNG SPNG
	22	Y02B Y62A Y62B
T22.32		SVB VB
	15	MSPNG SPNG
	22	Y02B Y62A Y62B
T22.33		SVB VB
	15	MSPNG SPNG
	22	Y02B Y62A Y62B
T22.40		VB
	22	Y62A Y62B
T22.41		VB
	22	Y62A Y62B
T22.42		VB
	22	Y62A Y62B
T22.43		VB
	22	Y62A Y62B
T22.50		VB
	22	Y62A Y62B
T22.51		VB
	22	Y62A Y62B
T22.52		VB
	22	Y62A Y62B
T22.53		VB
	22	Y62A Y62B
T22.60		VB
	22	Y02B Y62A Y62B
T22.61		VB
	22	Y02B Y62A Y62B
T22.62		VB
	22	Y02B Y62A Y62B
T22.63		VB
	22	Y02B Y62A Y62B
T22.70		SVB VB
	15	MSPNG SPNG
	22	Y02B Y62A Y62B
T22.71		SVB VB
	15	MSPNG SPNG
	22	Y02B Y62A Y62B
T22.72		SVB VB
	15	MSPNG SPNG
	22	Y02B Y62A Y62B
T22.73		SVB VB
	15	MSPNG SPNG
	22	Y02B Y62A Y62B
T22.80		SVB VB
	22	Y02B Y62A Y62B
T22.81		SVB VB
	22	Y02B Y62A Y62B
T22.82		SVB VB
	22	Y02B Y62A Y62B
T22.83		SVB VB

ICD	MDC	DRG
	22	Y02B Y62A Y62B
T22.90		SVB VB
	22	Y02B Y62A Y62B
T22.91		SVB VB
	22	Y02B Y62A Y62B
T22.92		SVB VB
	22	Y02B Y62A Y62B
T22.93		SVB VB
	22	Y02B Y62A Y62B
T23.0		VB
	22	Y62A Y62B
T23.1		VB
	22	Y62A Y62B
T23.3		SVB VB
	15	MSPNG SPNG
	22	Y02B Y62A Y62B
T23.4		VB
	22	Y62A Y62B
T23.5		VB
	22	Y62A Y62B
T23.7		SVB VB
	15	MSPNG SPNG
	22	Y02B Y62A Y62B
T23.20		VB
	22	Y02B Y62A Y62B
T23.21		SVB VB
	22	Y02B Y62A Y62B
T23.60		VB
	22	Y02B Y62A Y62B
T23.61		SVB VB
	22	Y02B Y62A Y62B
T24.0		VB
	22	Y62A Y62B
T24.1		VB
	22	Y62A Y62B
T24.3		SVB VB
	15	MSPNG SPNG
	22	Y02B Y62A Y62B
T24.4		VB
	22	Y62A Y62B
T24.5		VB
	22	Y62A Y62B
T24.7		SVB VB
	15	MSPNG SPNG
	22	Y02B Y62A Y62B
T24.20		VB
	22	Y02B Y62A Y62B
T24.21		SVB VB
	22	Y02B Y62A Y62B
T24.60		VB
	22	Y02B Y62A Y62B
T24.61		SVB VB
	22	Y02B Y62A Y62B
T25.0		VB
	22	Y62A Y62B
T25.1		VB
	22	Y62A Y62B
T25.3		SVB VB
	15	MSPNG SPNG
	22	Y02B Y62A Y62B
T25.4		VB
	22	Y62A Y62B
T25.5		VB
	22	Y62A Y62B
T25.7		SVB VB
	15	MSPNG SPNG
	22	Y02B Y62A Y62B
T25.20		VB
	22	Y02B Y62A Y62B
T25.21		SVB VB
	22	Y02B Y62A Y62B
T25.60		VB
	22	Y02B Y62A Y62B
T25.61		SVB VB
	22	Y02B Y62A Y62B
T26.0	02	C62Z
	15	MSPNG SPNG
T26.1	02	C62Z
	15	MSPNG SPNG
T26.2	02	C62Z
	15	MSPNG SPNG
T26.3	02	C62Z
	15	MSPNG SPNG
T26.4	02	C62Z
	15	MSPNG SPNG
T26.5	02	C62Z
	15	MSPNG SPNG
T26.6	02	C62Z
	15	MSPNG SPNG
T26.7	02	C62Z
	15	MSPNG SPNG
T26.8	02	C62Z
	15	MSPNG SPNG
T26.9	02	C62Z
	15	MSPNG SPNG
T27.0	04	E75A E75B E75C
	15	MSPNG SPNG
	Prä	A11C
T27.1	04	E75A E75B E75C
	15	MSPNG SPNG
	Prä	A11C
T27.2		VB
	15	MSPNG SPNG
	22	Y62A Y62B
	Prä	A11C
T27.3		VB
	15	MSPNG SPNG
	22	Y62A Y62B
	Prä	A11C
T27.4	04	E75A E75B E75C
	15	MSPNG SPNG
	Prä	A11C
T27.5	04	E75A E75B E75C
	15	MSPNG SPNG
	Prä	A11C
T27.6		VB
	15	MSPNG SPNG
	22	Y62A Y62B
	Prä	A11C
T27.7		VB
	15	MSPNG SPNG
	22	Y62A Y62B
	Prä	A11C
T28.0	03	D66A D66B
	15	MSPNG SPNG
	Prä	A11C
T28.1	06	G71A G71B
	15	MSPNG SPNG
	Prä	A11C
T28.2	06	G71A G71B
	15	MSPNG SPNG
	Prä	A11C
T28.3		VB
	15	MSPNG SPNG
	22	Y62A Y62B
	Prä	A11C
T28.4		VB
	15	MSPNG SPNG
	22	Y62A Y62B
	Prä	A11C
T28.5	03	D66A D66B
	15	MSPNG SPNG
	Prä	A11C
T28.6	06	G71A G71B
	15	MSPNG SPNG
	Prä	A11C
T28.7	06	G71A G71B
	15	MSPNG SPNG
	Prä	A11C
T28.8		VB
	15	MSPNG SPNG
	22	Y62A Y62B
	Prä	A11C
T28.9		VB
	15	MSPNG SPNG
	22	Y62A Y62B
	Prä	A11C
T29.0		VB
	15	MSPNG SPNG
	22	Y62A Y62B
T29.1		VB
	22	Y62A Y62B
T29.3		SVB VB
	15	MSPNG SPNG
	22	Y02B Y62A Y62B
T29.4		VB
	15	MSPNG SPNG
	22	Y62A Y62B
T29.5		VB
	22	Y62A Y62B
T29.7		SVB VB
	15	MSPNG SPNG
	22	Y02B Y62A Y62B
T29.20		VB
	22	Y02B Y62A Y62B
T29.21		SVB VB
	22	Y02B Y62A Y62B
T29.60		VB
	22	Y02B Y62A Y62B
T29.61		SVB VB
	22	Y02B Y62A Y62B
T30.0		VB
	22	Y62A Y62B
T30.1		VB
	22	Y62A Y62B
T30.3		VB
	22	Y02B Y62A Y62B
T30.4		VB
	22	Y62A Y62B
T30.5		VB
	22	Y62A Y62B
T30.7		VB
	22	Y02B Y62A Y62B
T30.20		VB
	22	Y02B Y62A Y62B
T30.21		VB
	22	Y02B Y62A Y62B
T30.60		VB
	22	Y02B Y62A Y62B
T30.61		VB
	22	Y02B Y62A Y62B
T31.00	Prä	961Z
T31.10	Prä	961Z
T31.11	Prä	961Z
	22	Y62A
T31.20	Prä	961Z
T31.21		SVB VB
	22	Y02A Y02B Y02C
		Y62A
	Prä	961Z A06A

DIAG

ICD	MDC	DRG
T31.22		SVB VB
	15	MSPNG SPNG
	22	Y02A Y02B Y02C Y62A
	Prä	961Z A06A
T31.30		VB
	22	Y62A
	Prä	961Z
T31.31		SVB VB
	22	Y02A Y02B Y02C Y62A
	Prä	961Z A06A
T31.32		SVB VB
	15	MSPNG SPNG
	22	Y02A Y02B Y02C Y62A
	Prä	961Z A06A
T31.33		SVB VB
	15	MSPNG SPNG
	22	Y02A Y02B Y02C Y62A
	Prä	961Z A06A
T31.40		SVB VB
	22	Y02A Y02B Y02C Y62A
	Prä	961Z A06A
T31.41		SVB VB
	22	Y02A Y02B Y02C Y62A
	Prä	961Z A06A
T31.42		SVB VB
	15	MSPNG SPNG
	22	Y02A Y02B Y02C Y62A
	Prä	961Z A06A
T31.43		SVB VB
	15	MSPNG SPNG
	22	Y02A Y02B Y02C Y62A
	Prä	961Z A06A
T31.44		SVB VB
	15	MSPNG SPNG
	22	Y02A Y02B Y02C Y62A
	Prä	961Z A06A
T31.50		SVB VB
	15	MSPNG SPNG
	22	Y02A Y02B Y02C Y62A
	Prä	961Z A06A
T31.51		SVB VB
	15	MSPNG SPNG
	22	Y02A Y02B Y02C Y62A
	Prä	961Z A06A
T31.52		SVB VB
	15	MSPNG SPNG
	22	Y02A Y02B Y02C Y62A
	Prä	961Z A06A
T31.53		SVB VB
	15	MSPNG SPNG
	22	Y02A Y02B Y02C Y62A
	Prä	961Z A06A
T31.54		SVB VB
	15	MSPNG SPNG
	22	Y02A Y02B Y02C Y62A
	Prä	961Z A06A
T31.55		SVB VB
	15	MSPNG SPNG
	22	Y02A Y02B Y02C Y62A
	Prä	961Z A06A
T31.60		SVB VB
	15	MSPNG SPNG
	22	Y02A Y02B Y02C Y62A
	Prä	961Z A06A
T31.61		SVB VB
	15	MSPNG SPNG
	22	Y02A Y02B Y02C Y62A
	Prä	961Z A06A
T31.62		SVB VB
	15	MSPNG SPNG
	22	Y02A Y02B Y02C Y62A
	Prä	961Z A06A
T31.63		SVB VB
	15	MSPNG SPNG
	22	Y02A Y02B Y02C Y62A
	Prä	961Z A06A
T31.64		SVB VB
	15	MSPNG SPNG
	22	Y02A Y02B Y02C Y62A
	Prä	961Z A06A
T31.65		SVB VB
	15	MSPNG SPNG
	22	Y02A Y02B Y02C Y62A
	Prä	961Z A06A
T31.66		SVB VB
	15	MSPNG SPNG
	22	Y02A Y02B Y02C Y62A
	Prä	961Z A06A
T31.70		SVB VB
	15	MSPNG SPNG
	22	Y02A Y02B Y02C Y62A
	Prä	961Z A06A
T31.71		SVB VB
	15	MSPNG SPNG
	22	Y02A Y02B Y02C Y62A
	Prä	961Z A06A
T31.72		SVB VB
	15	MSPNG SPNG
	22	Y02A Y02B Y02C Y62A
	Prä	961Z A06A
T31.73		SVB VB
	15	MSPNG SPNG
	22	Y02A Y02B Y02C Y62A
	Prä	961Z A06A
T31.74		SVB VB
	15	MSPNG SPNG
	22	Y02A Y02B Y02C Y62A
	Prä	961Z A06A
T31.75		SVB VB
	15	MSPNG SPNG
	22	Y02A Y02B Y02C Y62A
	Prä	961Z A06A
T31.76		SVB VB
	15	MSPNG SPNG
	22	Y02A Y02B Y02C Y62A
	Prä	961Z A06A
T31.77		SVB VB
	15	MSPNG SPNG
	22	Y02A Y02B Y02C Y62A
	Prä	961Z A06A
T31.80		SVB VB
	15	MSPNG SPNG
	22	Y02A Y02B Y02C Y62A
	Prä	961Z A06A
T31.81		SVB VB
	15	MSPNG SPNG
	22	Y02A Y02B Y02C Y62A
	Prä	961Z A06A
T31.82		SVB VB
	15	MSPNG SPNG
	22	Y02A Y02B Y02C Y62A
	Prä	961Z A06A
T31.83		SVB VB
	15	MSPNG SPNG
	22	Y02A Y02B Y02C Y62A
	Prä	961Z A06A
T31.84		SVB VB
	15	MSPNG SPNG
	22	Y02A Y02B Y02C Y62A
	Prä	961Z A06A
T31.85		SVB VB
	15	MSPNG SPNG
	22	Y02A Y02B Y02C Y62A
	Prä	961Z A06A
T31.86		SVB VB
	15	MSPNG SPNG
	22	Y02A Y02B Y02C Y62A
	Prä	961Z A06A
T31.87		SVB VB
	15	MSPNG SPNG
	22	Y02A Y02B Y02C Y62A
	Prä	961Z A06A
T31.88		SVB VB
	15	MSPNG SPNG
	22	Y02A Y02B Y02C Y62A
	Prä	961Z A06A
T31.90		SVB VB
	15	MSPNG SPNG
	22	Y02A Y02B Y02C Y62A
	Prä	961Z A06A
T31.91		SVB VB
	15	MSPNG SPNG
	22	Y02A Y02B Y02C Y62A
	Prä	961Z A06A
T31.92		SVB VB
	15	MSPNG SPNG
	22	Y02A Y02B Y02C Y62A
	Prä	961Z A06A

ICD	MDC	DRG
T31.93		SVB VB
	15	MSPNG SPNG
	22	Y02A Y02B Y02C Y62A
	Prä	961Z A06A
T31.94		SVB VB
	15	MSPNG SPNG
	22	Y02A Y02B Y02C Y62A
	Prä	961Z A06A
T31.95		SVB VB
	15	MSPNG SPNG
	22	Y02A Y02B Y02C Y62A
	Prä	961Z A06A
T31.96		SVB VB
	15	MSPNG SPNG
	22	Y02A Y02B Y02C Y62A
	Prä	961Z A06A
T31.97		SVB VB
	15	MSPNG SPNG
	22	Y02A Y02B Y02C Y62A
	Prä	961Z A06A
T31.98		SVB VB
	15	MSPNG SPNG
	22	Y02A Y02B Y02C Y62A
	Prä	961Z A06A
T31.99		SVB VB
	15	MSPNG SPNG
	22	Y02A Y02B Y02C Y62A
	Prä	961Z A06A
T32.00	Prä	961Z
T32.10	Prä	961Z
T32.11	Prä	961Z
	22	Y62A
T32.20	Prä	961Z
T32.21		SVB VB
	22	Y02A Y02B Y02C Y62A
	Prä	961Z A06A
T32.22		SVB VB
	15	MSPNG SPNG
	22	Y02A Y02B Y02C Y62A
	Prä	961Z A06A
T32.30		VB
	22	Y62A
	Prä	961Z
T32.31		SVB VB
	22	Y02A Y02B Y02C Y62A
	Prä	961Z A06A
T32.32		SVB VB
	15	MSPNG SPNG
	22	Y02A Y02B Y02C Y62A
	Prä	961Z A06A
T32.33		SVB VB
	15	MSPNG SPNG
	22	Y02A Y02B Y02C Y62A
	Prä	961Z A06A
T32.40		SVB VB
	22	Y02A Y02B Y02C Y62A
	Prä	961Z A06A
T32.41		SVB VB
	22	Y02A Y02B Y02C Y62A
	Prä	961Z A06A
T32.42		SVB VB
	15	MSPNG SPNG
	22	Y02A Y02B Y02C Y62A
	Prä	961Z A06A
T32.43		SVB VB
	15	MSPNG SPNG
	22	Y02A Y02B Y02C Y62A
	Prä	961Z A06A
T32.44		SVB VB
	15	MSPNG SPNG
	22	Y02A Y02B Y02C Y62A
	Prä	961Z A06A
T32.50		SVB VB
	15	MSPNG SPNG
	22	Y02A Y02B Y02C Y62A
	Prä	961Z A06A
T32.51		SVB VB
	15	MSPNG SPNG
	22	Y02A Y02B Y02C Y62A
	Prä	961Z A06A
T32.52		SVB VB
	15	MSPNG SPNG
	22	Y02A Y02B Y02C Y62A
	Prä	961Z A06A
T32.53		SVB VB
	15	MSPNG SPNG
	22	Y02A Y02B Y02C Y62A
	Prä	961Z A06A
T32.54		SVB VB
	15	MSPNG SPNG
	22	Y02A Y02B Y02C Y62A
	Prä	961Z A06A
T32.55		SVB VB
	15	MSPNG SPNG
	22	Y02A Y02B Y02C Y62A
	Prä	961Z A06A
T32.60		SVB VB
	15	MSPNG SPNG
	22	Y02A Y02B Y02C Y62A
	Prä	961Z A06A
T32.61		SVB VB
	15	MSPNG SPNG
	22	Y02A Y02B Y02C Y62A
	Prä	961Z A06A
T32.62		SVB VB
	15	MSPNG SPNG
	22	Y02A Y02B Y02C Y62A
	Prä	961Z A06A
T32.63		SVB VB
	15	MSPNG SPNG
	22	Y02A Y02B Y02C Y62A
	Prä	961Z A06A
T32.64		SVB VB
	15	MSPNG SPNG
	22	Y02A Y02B Y02C Y62A
	Prä	961Z A06A
T32.65		SVB VB
	15	MSPNG SPNG
	22	Y02A Y02B Y02C Y62A
	Prä	961Z A06A
T32.66		SVB VB
	15	MSPNG SPNG
	22	Y02A Y02B Y02C Y62A
	Prä	961Z A06A
T32.70		SVB VB
	15	MSPNG SPNG
	22	Y02A Y02B Y02C Y62A
	Prä	961Z A06A
T32.71		SVB VB
	15	MSPNG SPNG
	22	Y02A Y02B Y02C Y62A
	Prä	961Z A06A
T32.72		SVB VB
	15	MSPNG SPNG
	22	Y02A Y02B Y02C Y62A
	Prä	961Z A06A
T32.73		SVB VB
	15	MSPNG SPNG
	22	Y02A Y02B Y02C Y62A
	Prä	961Z A06A
T32.74		SVB VB
	15	MSPNG SPNG
	22	Y02A Y02B Y02C Y62A
	Prä	961Z A06A
T32.75		SVB VB
	15	MSPNG SPNG
	22	Y02A Y02B Y02C Y62A
	Prä	961Z A06A
T32.76		SVB VB
	15	MSPNG SPNG
	22	Y02A Y02B Y02C Y62A
	Prä	961Z A06A
T32.77		SVB VB
	15	MSPNG SPNG
	22	Y02A Y02B Y02C Y62A
	Prä	961Z A06A
T32.80		SVB VB
	15	MSPNG SPNG
	22	Y02A Y02B Y02C Y62A
	Prä	961Z A06A
T32.81		SVB VB
	15	MSPNG SPNG
	22	Y02A Y02B Y02C Y62A
	Prä	961Z A06A
T32.82		SVB VB
	15	MSPNG SPNG
	22	Y02A Y02B Y02C Y62A
	Prä	961Z A06A
T32.83		SVB VB

DIAG

ICD	MDC	DRG
	15	MSPNG SPNG
	22	Y02A Y02B Y02C Y62A
	Prä	961Z A06A
T32.84		SVB VB
	15	MSPNG SPNG
	22	Y02A Y02B Y02C Y62A
	Prä	961Z A06A
T32.85		SVB VB
	15	MSPNG SPNG
	22	Y02A Y02B Y02C Y62A
	Prä	961Z A06A
T32.86		SVB VB
	15	MSPNG SPNG
	22	Y02A Y02B Y02C Y62A
	Prä	961Z A06A
T32.87		SVB VB
	15	MSPNG SPNG
	22	Y02A Y02B Y02C Y62A
	Prä	961Z A06A
T32.88		SVB VB
	15	MSPNG SPNG
	22	Y02A Y02B Y02C Y62A
	Prä	961Z A06A
T32.90		SVB VB
	15	MSPNG SPNG
	22	Y02A Y02B Y02C Y62A
	Prä	961Z A06A
T32.91		SVB VB
	15	MSPNG SPNG
	22	Y02A Y02B Y02C Y62A
	Prä	961Z A06A
T32.92		SVB VB
	15	MSPNG SPNG
	22	Y02A Y02B Y02C Y62A
	Prä	961Z A06A
T32.93		SVB VB
	15	MSPNG SPNG
	22	Y02A Y02B Y02C Y62A
	Prä	961Z A06A
T32.94		SVB VB
	15	MSPNG SPNG
	22	Y02A Y02B Y02C Y62A
	Prä	961Z A06A
T32.95		SVB VB
	15	MSPNG SPNG
	22	Y02A Y02B Y02C Y62A
	Prä	961Z A06A
T32.96		SVB VB
	15	MSPNG SPNG
	22	Y02A Y02B Y02C Y62A
	Prä	961Z A06A
T32.97		SVB VB
	15	MSPNG SPNG
	22	Y02A Y02B Y02C Y62A
	Prä	961Z A06A
T32.98		SVB VB
	15	MSPNG SPNG
	22	Y02A Y02B Y02C Y62A
	Prä	961Z A06A
T32.99		SVB VB
	15	MSPNG SPNG
	22	Y02A Y02B Y02C Y62A
	Prä	961Z A06A
T33.0	15	MSPNG SPNG
	21B	X64Z
T33.1	15	MSPNG SPNG
	21B	X64Z
T33.2	15	MSPNG SPNG
	21B	X64Z
T33.3	15	MSPNG SPNG
	21B	X64Z
T33.4	15	MSPNG SPNG
	21B	X64Z
T33.5	15	MSPNG SPNG
	21B	X05Z X64Z
T33.6	15	MSPNG SPNG
	21B	X64Z
T33.7	15	MSPNG SPNG
	21B	X64Z
T33.8	15	MSPNG SPNG
	21B	X04Z X64Z
T33.9	15	MSPNG SPNG
	21B	X64Z
T34.0	15	MSPNG SPNG
	21B	X62A X62B
	Prä	A11C
T34.1	15	MSPNG SPNG
	21B	X62A X62B
	Prä	A11C
T34.2	15	MSPNG SPNG
	21B	X62A X62B
	Prä	A11C
T34.3	15	MSPNG SPNG
	21B	X62A X62B
	Prä	A11C
T34.4	15	MSPNG SPNG
	21B	X62A X62B
	Prä	A11C
T34.5	15	MSPNG SPNG
	21B	X05Z X62A X62B
	Prä	A11C
T34.6	15	MSPNG SPNG
	21B	X62A X62B
	Prä	A11C
T34.7	15	MSPNG SPNG
	21B	X62A X62B
	Prä	A11C
T34.8	15	MSPNG SPNG
	21B	X04Z X62A X62B
	Prä	A11C
T34.9	15	MSPNG SPNG
	21B	X62A X62B
	Prä	A11C
T35.0	15	MSPNG SPNG
	21B	X62A X62B
T35.1	15	MSPNG SPNG
	21B	X62A X62B
	Prä	A11C
T35.2	15	MSPNG SPNG
	21B	X64Z
T35.3	15	MSPNG SPNG
	21B	X64Z
T35.4	15	MSPNG SPNG
	21B	X05Z X64Z
T35.5	15	MSPNG SPNG
	21B	X04Z X64Z
T35.6	15	MSPNG SPNG
	21B	X64Z
T35.7	15	MSPNG SPNG
	21B	X64Z
T36.0	15	MSPNG SPNG
	21B	X62A X62B
	Prä	A11C
T36.1	15	MSPNG SPNG
	21B	X62A X62B
	Prä	A11C
T36.2	15	MSPNG SPNG
	21B	X62A X62B
	Prä	A11C
T36.3	15	MSPNG SPNG
	21B	X62A X62B
	Prä	A11C
T36.4	15	MSPNG SPNG
	21B	X62A X62B
	Prä	A11C
T36.5	15	MSPNG SPNG
	21B	X62A X62B
	Prä	A11C
T36.6	15	MSPNG SPNG
	21B	X62A X62B
	Prä	A11C
T36.7	15	MSPNG SPNG
	21B	X62A X62B
	Prä	A11C
T36.8	15	MSPNG SPNG
	21B	X62A X62B
	Prä	A11C
T36.9	15	MSPNG SPNG
	21B	X62A X62B
	Prä	A11C
T37.0	15	MSPNG SPNG
	21B	X62A X62B
	Prä	A11C
T37.1	15	MSPNG SPNG
	21B	X62A X62B
	Prä	A11C
T37.2	15	MSPNG SPNG
	21B	X62A X62B
	Prä	A11C
T37.3	15	MSPNG SPNG
	21B	X62A X62B
	Prä	A11C
T37.4	15	MSPNG SPNG
	21B	X62A X62B
	Prä	A11C
T37.5	15	MSPNG SPNG
	21B	X62A X62B
	Prä	A11C
T37.8	15	MSPNG SPNG
	21B	X62A X62B
	Prä	A11C
T37.9	15	MSPNG SPNG
	21B	X62A X62B
	Prä	A11C
T38.0	15	MSPNG SPNG
	21B	X62A X62B
	Prä	A11C
T38.1	15	MSPNG SPNG
	21B	X62A X62B
	Prä	A11C
T38.2	15	MSPNG SPNG
	21B	X62A X62B
	Prä	A11C
T38.3	15	MSPNG SPNG

ICD	MDC	DRG
	21B	X62A X62B
	Prä	A11C
T38.4	15	MSPNG SPNG
	21B	X62A X62B
	Prä	A11C
T38.5	15	MSPNG SPNG
	21B	X62A X62B
	Prä	A11C
T38.6	15	MSPNG SPNG
	21B	X62A X62B
	Prä	A11C
T38.7	15	MSPNG SPNG
	21B	X62A X62B
	Prä	A11C
T38.8	15	MSPNG SPNG
	21B	X62A X62B
	Prä	A11C
T38.9	15	MSPNG SPNG
	21B	X62A X62B
	Prä	A11C
T39.0	15	MSPNG SPNG
	21B	X62A X62B
	Prä	A11C
T39.1	15	MSPNG SPNG
	21B	X62A X62B
	Prä	A11C
T39.2	15	MSPNG SPNG
	21B	X62A X62B
	Prä	A11C
T39.3	15	MSPNG SPNG
	21B	X62A X62B
	Prä	A11C
T39.4	15	MSPNG SPNG
	21B	X62A X62B
	Prä	A11C
T39.8	15	MSPNG SPNG
	21B	X62A X62B
	Prä	A11C
T39.9	15	MSPNG SPNG
	21B	X62A X62B
	Prä	A11C
T40.0	15	MSPNG SPNG
	21B	X62A X62B
	Prä	A11C
T40.1	15	MSPNG SPNG
	21B	X62A X62B
	Prä	A11C
T40.2	15	MSPNG SPNG
	21B	X62A X62B
	Prä	A11C
T40.3	15	MSPNG SPNG
	21B	X62A X62B
	Prä	A11C
T40.4	15	MSPNG SPNG
	21B	X62A X62B
	Prä	A11C
T40.5	15	MSPNG SPNG
	21B	X62A X62B
	Prä	A11C
T40.6	15	MSPNG SPNG
	21B	X62A X62B
	Prä	A11C
T40.7	15	MSPNG SPNG
	21B	X62A X62B
	Prä	A11C
T40.8	15	MSPNG SPNG
	21B	X62A X62B
	Prä	A11C
T40.9	15	MSPNG SPNG
	21B	X62A X62B
	Prä	A11C
T41.0	15	MSPNG SPNG
	21B	X62A X62B
	Prä	A11C
T41.1	15	MSPNG SPNG
	21B	X62A X62B
	Prä	A11C
T41.2	15	MSPNG SPNG
	21B	X62A X62B
	Prä	A11C
T41.3	15	MSPNG SPNG
	21B	X62A X62B
	Prä	A11C
T41.4	15	MSPNG SPNG
	21B	X62A X62B
	Prä	A11C
T41.5	15	MSPNG SPNG
	21B	X62A X62B
	Prä	A11C
T42.0	15	MSPNG SPNG
	21B	X62A X62B
	Prä	A11C
T42.1	15	MSPNG SPNG
	21B	X62A X62B
	Prä	A11C
T42.2	15	MSPNG SPNG
	21B	X62A X62B
	Prä	A11C
T42.3	15	MSPNG SPNG
	21B	X62A X62B
	Prä	A11C
T42.4	15	MSPNG SPNG
	21B	X62A X62B
	Prä	A11C
T42.5	15	MSPNG SPNG
	21B	X62A X62B
	Prä	A11C
T42.6	15	MSPNG SPNG
	21B	X62A X62B
	Prä	A11C
T42.7	15	MSPNG SPNG
	21B	X62A X62B
	Prä	A11C
T42.8	15	MSPNG SPNG
	21B	X62A X62B
	Prä	A11C
T43.0	15	MSPNG SPNG
	21B	X62A X62B
	Prä	A11C
T43.1	15	MSPNG SPNG
	21B	X62A X62B
	Prä	A11C
T43.2	15	MSPNG SPNG
	21B	X62A X62B
	Prä	A11C
T43.3	15	MSPNG SPNG
	21B	X62A X62B
	Prä	A11C
T43.4	15	MSPNG SPNG
	21B	X62A X62B
	Prä	A11C
T43.5	15	MSPNG SPNG
	21B	X62A X62B
	Prä	A11C
T43.6	15	MSPNG SPNG
	21B	X62A X62B
	Prä	A11C
T43.8	15	MSPNG SPNG
	21B	X62A X62B
	Prä	A11C
T43.9	15	MSPNG SPNG
	21B	X62A X62B
	Prä	A11C
T44.0	15	MSPNG SPNG
	21B	X62A X62B
	Prä	A11C
T44.1	15	MSPNG SPNG
	21B	X62A X62B
	Prä	A11C
T44.2	15	MSPNG SPNG
	21B	X62A X62B
	Prä	A11C
T44.3	15	MSPNG SPNG
	21B	X62A X62B
	Prä	A11C
T44.4	15	MSPNG SPNG
	21B	X62A X62B
	Prä	A11C
T44.5	15	MSPNG SPNG
	21B	X62A X62B
	Prä	A11C
T44.6	15	MSPNG SPNG
	21B	X62A X62B
	Prä	A11C
T44.7	15	MSPNG SPNG
	21B	X62A X62B
	Prä	A11C
T44.8	15	MSPNG SPNG
	21B	X62A X62B
	Prä	A11C
T44.9	15	MSPNG SPNG
	21B	X62A X62B
	Prä	A11C
T45.0	15	MSPNG SPNG
	21B	X62A X62B
	Prä	A11C
T45.1	15	MSPNG SPNG
	21B	X62A X62B
	Prä	A11C
T45.2	15	MSPNG SPNG
	21B	X62A X62B
	Prä	A11C
T45.3	15	MSPNG SPNG
	21B	X62A X62B
	Prä	A11C
T45.4	15	MSPNG SPNG
	21B	X62A X62B
	Prä	A11C
T45.5	15	MSPNG SPNG
	21B	X62A X62B
	Prä	A11C
T45.6	15	MSPNG SPNG
	21B	X62A X62B
	Prä	A11C
T45.7	15	MSPNG SPNG
	21B	X62A X62B
	Prä	A11C
T45.8	15	MSPNG SPNG
	21B	X62A X62B
	Prä	A11C
T45.9	15	MSPNG SPNG
	21B	X62A X62B
	Prä	A11C
T46.0	15	MSPNG SPNG
	21B	X62A X62B
	Prä	A11C
T46.1	15	MSPNG SPNG
	21B	X62A X62B
	Prä	A11C
T46.2	15	MSPNG SPNG

DIAG

ICD	MDC	DRG
	21B	X62A X62B
	Prä	A11C
T46.3	15	MSPNG SPNG
	21B	X62A X62B
	Prä	A11C
T46.4	15	MSPNG SPNG
	21B	X62A X62B
	Prä	A11C
T46.5	15	MSPNG SPNG
	21B	X62A X62B
	Prä	A11C
T46.6	15	MSPNG SPNG
	21B	X62A X62B
	Prä	A11C
T46.7	15	MSPNG SPNG
	21B	X62A X62B
	Prä	A11C
T46.8	15	MSPNG SPNG
	21B	X62A X62B
	Prä	A11C
T46.9	15	MSPNG SPNG
	21B	X62A X62B
	Prä	A11C
T47.0	15	MSPNG SPNG
	21B	X62A X62B
	Prä	A11C
T47.1	15	MSPNG SPNG
	21B	X62A X62B
	Prä	A11C
T47.2	15	MSPNG SPNG
	21B	X62A X62B
	Prä	A11C
T47.3	15	MSPNG SPNG
	21B	X62A X62B
	Prä	A11C
T47.4	15	MSPNG SPNG
	21B	X62A X62B
	Prä	A11C
T47.5	15	MSPNG SPNG
	21B	X62A X62B
	Prä	A11C
T47.6	15	MSPNG SPNG
	21B	X62A X62B
	Prä	A11C
T47.7	15	MSPNG SPNG
	21B	X62A X62B
	Prä	A11C
T47.8	15	MSPNG SPNG
	21B	X62A X62B
	Prä	A11C
T47.9	15	MSPNG SPNG
	21B	X62A X62B
	Prä	A11C
T48.0	15	MSPNG SPNG
	21B	X62A X62B
	Prä	A11C
T48.1	15	MSPNG SPNG
	21B	X62A X62B
	Prä	A11C
T48.2	15	MSPNG SPNG
	21B	X62A X62B
	Prä	A11C
T48.3	15	MSPNG SPNG
	21B	X62A X62B
	Prä	A11C
T48.4	15	MSPNG SPNG
	21B	X62A X62B
	Prä	A11C
T48.5	15	MSPNG SPNG
	21B	X62A X62B
	Prä	A11C
T48.6	15	MSPNG SPNG
	21B	X62A X62B
	Prä	A11C
T48.7	15	MSPNG SPNG
	21B	X62A X62B
	Prä	A11C
T49.0	15	MSPNG SPNG
	21B	X62A X62B
	Prä	A11C
T49.1	15	MSPNG SPNG
	21B	X62A X62B
	Prä	A11C
T49.2	15	MSPNG SPNG
	21B	X62A X62B
	Prä	A11C
T49.3	15	MSPNG SPNG
	21B	X62A X62B
	Prä	A11C
T49.4	15	MSPNG SPNG
	21B	X62A X62B
	Prä	A11C
T49.5	02	C62Z
	15	MSPNG SPNG
	Prä	A11C
T49.6	15	MSPNG SPNG
	21B	X62A X62B
	Prä	A11C
T49.7	15	MSPNG SPNG
	21B	X62A X62B
	Prä	A11C
T49.8	15	MSPNG SPNG
	21B	X62A X62B
	Prä	A11C
T49.9	15	MSPNG SPNG
	21B	X62A X62B
	Prä	A11C
T50.0	15	MSPNG SPNG
	21B	X62A X62B
	Prä	A11C
T50.1	15	MSPNG SPNG
	21B	X62A X62B
	Prä	A11C
T50.2	15	MSPNG SPNG
	21B	X62A X62B
	Prä	A11C
T50.3	15	MSPNG SPNG
	21B	X62A X62B
	Prä	A11C
T50.4	15	MSPNG SPNG
	21B	X62A X62B
	Prä	A11C
T50.5	15	MSPNG SPNG
	21B	X62A X62B
	Prä	A11C
T50.6	15	MSPNG SPNG
	21B	X62A X62B
	Prä	A11C
T50.7	15	MSPNG SPNG
	21B	X62A X62B
	Prä	A11C
T50.8	15	MSPNG SPNG
	21B	X62A X62B
	Prä	A11C
T50.9	15	MSPNG SPNG
	21B	X62A X62B
T51.0	15	MSPNG SPNG
	21B	X62A X62B
T51.1	15	MSPNG SPNG
	21B	X62A X62B
	Prä	A11C
T51.2	15	MSPNG SPNG
	21B	X62A X62B
	Prä	A11C
T51.3	15	MSPNG SPNG
	21B	X62A X62B
	Prä	A11C
T51.8	15	MSPNG SPNG
	21B	X62A X62B
T51.9	15	MSPNG SPNG
	21B	X62A X62B
T52.0	15	MSPNG SPNG
	21B	X62A X62B
	Prä	A11C
T52.1	15	MSPNG SPNG
	21B	X62A X62B
	Prä	A11C
T52.2	15	MSPNG SPNG
	21B	X62A X62B
	Prä	A11C
T52.3	15	MSPNG SPNG
	21B	X62A X62B
	Prä	A11C
T52.4	15	MSPNG SPNG
	21B	X62A X62B
	Prä	A11C
T52.8	15	MSPNG SPNG
	21B	X62A X62B
	Prä	A11C
T52.9	15	MSPNG SPNG
	21B	X62A X62B
	Prä	A11C
T53.0	15	MSPNG SPNG
	21B	X62A X62B
	Prä	A11C
T53.1	15	MSPNG SPNG
	21B	X62A X62B
	Prä	A11C
T53.2	15	MSPNG SPNG
	21B	X62A X62B
	Prä	A11C
T53.3	15	MSPNG SPNG
	21B	X62A X62B
	Prä	A11C
T53.4	15	MSPNG SPNG
	21B	X62A X62B
	Prä	A11C
T53.5	15	MSPNG SPNG
	21B	X62A X62B
	Prä	A11C
T53.6	15	MSPNG SPNG
	21B	X62A X62B
	Prä	A11C
T53.7	15	MSPNG SPNG
	21B	X62A X62B
	Prä	A11C
T53.9	15	MSPNG SPNG
	21B	X62A X62B
	Prä	A11C
T54.0	15	MSPNG SPNG
	21B	X62A X62B
	Prä	A11C
T54.1	15	MSPNG SPNG
	21B	X62A X62B
	Prä	A11C
T54.2	15	MSPNG SPNG
	21B	X62A X62B
	Prä	A11C
T54.3	15	MSPNG SPNG
	21B	X62A X62B

ICD	MDC	DRG
	Prä	A11C
T54.9	15	MSPNG SPNG
	21B	X62A X62B
	Prä	A11C
T55	15	MSPNG SPNG
	21B	X62A X62B
	Prä	A11C
T56.0	15	MSPNG SPNG
	21B	X62A X62B
	Prä	A11C
T56.1	15	MSPNG SPNG
	21B	X62A X62B
	Prä	A11C
T56.2	15	MSPNG SPNG
	21B	X62A X62B
	Prä	A11C
T56.3	15	MSPNG SPNG
	21B	X62A X62B
	Prä	A11C
T56.4	15	MSPNG SPNG
	21B	X62A X62B
	Prä	A11C
T56.5	15	MSPNG SPNG
	21B	X62A X62B
	Prä	A11C
T56.6	15	MSPNG SPNG
	21B	X62A X62B
	Prä	A11C
T56.7	15	MSPNG SPNG
	21B	X62A X62B
	Prä	A11C
T56.8	15	MSPNG SPNG
	21B	X62A X62B
	Prä	A11C
T56.9	15	MSPNG SPNG
	21B	X62A X62B
	Prä	A11C
T57.0	15	MSPNG SPNG
	21B	X62A X62B
	Prä	A11C
T57.1	15	MSPNG SPNG
	21B	X62A X62B
	Prä	A11C
T57.2	15	MSPNG SPNG
	21B	X62A X62B
	Prä	A11C
T57.3	15	MSPNG SPNG
	21B	X62A X62B
	Prä	A11C
T57.8	15	MSPNG SPNG
	21B	X62A X62B
	Prä	A11C
T57.9	15	MSPNG SPNG
	21B	X62A X62B
	Prä	A11C
T58	15	MSPNG SPNG
	21B	X62A X62B
	Prä	A11C
T59.0	15	MSPNG SPNG
	21B	X62A X62B
	Prä	A11C
T59.1	15	MSPNG SPNG
	21B	X62A X62B
	Prä	A11C
T59.2	15	MSPNG SPNG
	21B	X62A X62B
	Prä	A11C
T59.3	15	MSPNG SPNG
	21B	X62A X62B
	Prä	A11C
T59.4	15	MSPNG SPNG
	21B	X62A X62B
	Prä	A11C
T59.5	15	MSPNG SPNG
	21B	X62A X62B
	Prä	A11C
T59.6	15	MSPNG SPNG
	21B	X62A X62B
	Prä	A11C
T59.7	15	MSPNG SPNG
	21B	X62A X62B
	Prä	A11C
T59.8	15	MSPNG SPNG
	21B	X62A X62B
T59.9	15	MSPNG SPNG
	21B	X62A X62B
T60.0	15	MSPNG SPNG
	21B	X62A X62B
	Prä	A11C
T60.1	15	MSPNG SPNG
	21B	X62A X62B
	Prä	A11C
T60.2	15	MSPNG SPNG
	21B	X62A X62B
	Prä	A11C
T60.3	15	MSPNG SPNG
	21B	X62A X62B
	Prä	A11C
T60.4	15	MSPNG SPNG
	21B	X62A X62B
	Prä	A11C
T60.8	15	MSPNG SPNG
	21B	X62A X62B
	Prä	A11C
T60.9	15	MSPNG SPNG
	21B	X62A X62B
	Prä	A11C
T61.0	Prä	A11C
	21B	X62A X62B
T61.1	Prä	A11C
	21B	X62A X62B
T61.2	Prä	A11C
	21B	X62A X62B
T61.8	Prä	A11C
	21B	X62A X62B
T61.9	Prä	A11C
	21B	X62A X62B
T62.0	Prä	A11C
	21B	X62A X62B
T62.1	Prä	A11C
	21B	X62A X62B
T62.2	Prä	A11C
	21B	X62A X62B
T62.8	Prä	A11C
	21B	X62A X62B
T62.9	Prä	A11C
	21B	X62A X62B
T63.0	15	MSPNG SPNG
	21B	X62A X62B
	Prä	A11C
T63.1	15	MSPNG SPNG
	21B	X62A X62B
	Prä	A11C
T63.2	15	MSPNG SPNG
	21B	X62A X62B
	Prä	A11C
T63.3	15	MSPNG SPNG
	21B	X62A X62B
	Prä	A11C
T63.4	15	MSPNG SPNG
	21B	X62A X62B
	Prä	A11C
T63.5	15	MSPNG SPNG
	21B	X62A X62B
	Prä	A11C
T63.6	15	MSPNG SPNG
	21B	X62A X62B
	Prä	A11C
T63.8	15	MSPNG SPNG
	21B	X62A X62B
	Prä	A11C
T63.9	15	MSPNG SPNG
	21B	X62A X62B
	Prä	A11C
T64	15	MSPNG SPNG
	21B	X62A X62B
	Prä	A11C
T65.0	15	MSPNG SPNG
	21B	X62A X62B
	Prä	A11C
T65.1	15	MSPNG SPNG
	21B	X62A X62B
	Prä	A11C
T65.2	15	MSPNG SPNG
	21B	X62A X62B
	Prä	A11C
T65.3	15	MSPNG SPNG
	21B	X62A X62B
	Prä	A11C
T65.4	15	MSPNG SPNG
	21B	X62A X62B
	Prä	A11C
T65.5	15	MSPNG SPNG
	21B	X62A X62B
	Prä	A11C
T65.6	15	MSPNG SPNG
	21B	X62A X62B
	Prä	A11C
T65.8	15	MSPNG SPNG
	21B	X62A X62B
T65.9	15	MSPNG SPNG
	21B	X62A X62B
T66	21B	X64Z
T67.0	15	MSPNG SPNG
	21B	X64Z
T67.1	15	MSPNG SPNG
	21B	X64Z
T67.2	21B	X64Z
T67.3	21B	X64Z
T67.4	21B	X64Z
T67.5	21B	X64Z
T67.6	21B	X64Z
T67.7	21B	X64Z
T67.8	21B	X64Z
T67.9	21B	X64Z
T68	Prä	A11C
	21B	X64Z
T69.0	21B	X04Z X64Z
T69.1	21B	X62A X62B
T69.8	21B	X64Z
T69.9	21B	X64Z
T70.0	21B	X60A X60B X60C
T70.1	21B	X60A X60B X60C
T70.2	21B	X64Z
T70.3	21B	X62A
T70.4	21B	X64Z
T70.8	21B	X64Z
T70.9	21B	X64Z
T71	15	MSPNG SPNG
	21B	X62A X62B

DIAG

ICD	MDC	DRG
T73.0	21B	X64Z
T73.1	15	MSPNG SPNG
	21B	X64Z
T73.2	21B	X64Z
T73.3	21B	X64Z
T73.8	21B	X64Z
T73.9	21B	X64Z
T74.0	Prä	961Z A95C
	21A	W61A W61B W61C
T74.1	Prä	961Z A95C
	21A	W61A W61B W61C
T74.2	Prä	961Z A95C
	21A	W61A W61B W61C
T74.3	Prä	961Z A95C
	21A	W61A W61B W61C
T74.8	Prä	961Z A95C
	21A	W61A W61B W61C
T74.9	Prä	961Z A95C
	21A	W61A W61B W61C
T75.0	21B	X62A X62B
T75.1	Prä	A11C
	21B	X62A X62B
T75.2	21B	X64Z
T75.3	03	D66A D66B
T75.4	15	MSPNG SPNG
	21B	X64Z
T75.8	21B	X64Z
T76	21B	X64Z
T78.0	21B	X60A X60B X60C
T78.1	21B	X62A X62B
T78.2	21B	X60A X60B X60C
T78.3	Prä	A11C
	21B	X60A X60B X60C
T78.4	21B	X60A X60B X60C
T78.8	21B	X62A X62B
T78.9	21B	X62A X62B
T79.0		PTR
	04	E64A E64B E64C
		E64D E86B
	15	MSPNG SPNG
	21A	W61A W61B W61C
	Prä	A11C A95C
T79.1		PTR
	04	E64A E64B E64C
		E64D E86B
	15	MSPNG SPNG
	21A	W61A W61B W61C
	Prä	A11C A95C
T79.2		PTR
	21A	W61A W61B W61C
	21B	X64Z
	Prä	A95C
T79.3		PTR
	18B	T61A T61B
	21A	W61A W61B W61C
	Prä	A95C
T79.4		PTR
	21A	W61A W61B W61C
	21B	X64Z
	Prä	A11C A95C
T79.5		PTR
	11	L60A L60B L60C
		L60D L60E L71Z
	21A	W61A W61B W61C
	Prä	A11C A95C
T79.7		PTR
	04	E76A E76B E76C
		E76D
	15	MSPNG SPNG
	21A	W61A W61B W61C

ICD	MDC	DRG
	Prä	A11C A95C
T79.8		PTR
	21A	W61A W61B W61C
	21B	X64Z
	Prä	A95C
T79.9		PTR
	21A	W61A W61B W61C
	21B	X64Z
	Prä	A95C
T79.60		PTR
	08	I76A I76B
	15	MSPNG SPNG
	21A	W61A W61B W61C
	Prä	A11C A95C
T79.61		PTR
	08	I76A I76B
	15	MSPNG SPNG
	21A	W61A W61B W61C
	Prä	A11C A95C
T79.62		PTR
	08	I76A I76B
	15	MSPNG SPNG
	21A	W61A W61B W61C
	Prä	A11C A95C
T79.63		PTR
	08	I76A I76B
	15	MSPNG SPNG
	21A	W61A W61B W61C
	Prä	A11C A95C
T79.68		PTR
	08	I76A I76B
	15	MSPNG SPNG
	21A	W61A W61B W61C
	Prä	A11C A95C
T79.69	08	I76A I76B
T80.0	04	E64A E64B E64C
		E64D E86B
	15	MSPNG SPNG
	Prä	A11C
T80.1	05	F75A F75B F75C
		F75D
T80.2	Prä	A11C
	18B	T64A T64B T64C
T80.3	15	MSPNG SPNG
	16	Q61A Q61B Q61C
	Prä	A11C
T80.4	15	MSPNG SPNG
	16	Q61A Q61B Q61C
	Prä	A11C
T80.5	Prä	A11C
	21B	X60A X60B X60C
T80.6	21B	X60A X60B X60C
T80.8	16	Q61A Q61B Q61C
T80.9	16	Q61A Q61B Q61C
T81.0	21B	X62A X62B
T81.1	05	F73A F73B
T81.2	21B	X62A X62B
T81.3	15	MSPNG SPNG
	21B	X62A X62B
T81.4	Prä	A95A A95B
	08	I02A I02B I02C
		I03A I03B I04A
		I04B I04C
	18B	T61A T61B
T81.5	15	MSPNG SPNG
	21B	X62A X62B
T81.6	15	MSPNG SPNG
	21B	X62A X62B
T81.7	05	F75A F75B F75C
		F75D

ICD	MDC	DRG
T81.8	21B	X62A X62B
T81.9	21B	X62A X62B
T82.0	05	F69A F69B
	15	MSPNG SPNG
T82.1	05	F66A F66B
	15	MSPNG SPNG
T82.2	05	F75A F75B F75C
		F75D
	15	MSPNG SPNG
T82.3	05	F75A F75B F75C
		F75D
	15	MSPNG SPNG
T82.4	05	F75A F75B F75C
		F75D
	15	MSPNG SPNG
T82.5	05	F75A F75B F75C
		F75D
	15	MSPNG SPNG
T82.6	05	F24A F75A F75B
		F75C F75D
	15	MSPNG SPNG
T82.7	05	F24A F61A F75A
		F75B F75C F75D
	15	MSPNG SPNG
T82.8	05	F75A F75B F75C
		F75D
	15	MSPNG SPNG
T82.9	05	F75A F75B F75C
		F75D
	15	MSPNG SPNG
T83.0	11	L64A L64B
	15	MSPNG SPNG
T83.1	11	L64A L64B
	15	MSPNG SPNG
T83.2	11	L64A L64B
	15	MSPNG SPNG
T83.3	13	N62B
T83.4	12	M64Z
	13	N62B
	15	MSPNG SPNG
T83.5	11	L20C L63A L63B
		L63C L63D
	15	MSPNG SPNG
T83.6	12	M64Z
	13	N62B
	15	MSPNG SPNG
T83.8	11	L64A L64B
	15	MSPNG SPNG
T83.9	11	L64A L64B
	15	MSPNG SPNG
T84.00	08	I46B I73A I73B
	15	MSPNG SPNG
	Prä	B61B B61C
T84.01	08	I46B I73A I73B
	15	MSPNG SPNG
	Prä	B61B B61C
T84.02	08	I46B I73A I73B
	15	MSPNG SPNG
	Prä	B61B B61C
T84.03	08	I46B I73A I73B
	15	MSPNG SPNG
	Prä	B61B B61C
T84.3	08	I46B I73A I73B
	15	MSPNG SPNG
	Prä	B61B B61C
T84.04	08	I46B I73A I73B
	15	MSPNG SPNG
	Prä	B61B B61C
T84.4	08	I46B I73A I73B
	15	MSPNG SPNG

ICD	MDC	DRG
	Prä	B61B B61C
T84.05	08	I46B I73A I73B
	15	MSPNG SPNG
	Prä	B61B B61C
T84.5	08	I02A I02B I02C I03A I03B I04A I04B I04C I08A I08B I12A I12B I12C I13A I13B I46B I73A I73B
	15	MSPNG SPNG
	Prä	A11C A95A A95B B61B B61C B61D
T84.06	08	I46B I73A I73B
	15	MSPNG SPNG
	Prä	B61B B61C
T84.6	08	I02A I02B I02C I08A I08B I12A I12B I12C I13A I13B I46B I73A I73B
	15	MSPNG SPNG
	Prä	B61B B61C B61D
T84.07	08	I46B I73A I73B
	15	MSPNG SPNG
	Prä	B61B B61C
T84.7	08	I02A I02B I02C I08A I08B I12A I12B I12C I13A I13B I46B I73A I73B
	15	MSPNG SPNG
	Prä	B61B B61C B61D
T84.08	08	I46B I73A I73B
	15	MSPNG SPNG
	Prä	B61B B61C
T84.8	08	I02A I02B I02C I08A I08B I13A I13B I46B I73A I73B
	15	MSPNG SPNG
	Prä	B61B B61C
T84.9	08	I02A I02B I02C I08A I08B I13A I13B I46B I73A I73B
	15	MSPNG SPNG
	Prä	B61B B61C
T84.10	08	I46B I73A I73B
	15	MSPNG SPNG
	Prä	B61B B61C
T84.11	08	I46B I73A I73B
	15	MSPNG SPNG
	Prä	B61B B61C
T84.12	08	I46B I73A I73B
	15	MSPNG SPNG
	Prä	B61B B61C
T84.13	08	I46B I73A I73B
	15	MSPNG SPNG
	Prä	B61B B61C
T84.14	08	I46B I73A I73B
	15	MSPNG SPNG
	Prä	B61B B61C
T84.15	08	I46B I73A I73B
	15	MSPNG SPNG
	Prä	B61B B61C
T84.16	08	I46B I73A I73B
	15	MSPNG SPNG
	Prä	B61B B61C
T84.18	08	I46B I73A I73B
	15	MSPNG SPNG
	Prä	B61B B61C
T84.20	08	I46B I73A I73B
	15	MSPNG SPNG
	Prä	B61B B61C
T84.28	08	I46B I73A I73B
	15	MSPNG SPNG
	Prä	B61B B61C
T85.0	01	B81A B81B B81C
	15	MSPNG SPNG
T85.1	01	B81A B81B B81C
	15	MSPNG SPNG
T85.2	02	C62Z
	15	MSPNG SPNG
T85.3	02	C62Z
	15	MSPNG SPNG
T85.4	09	J01A J01B J67Z
	15	MSPNG SPNG
T85.6	15	MSPNG SPNG
	21B	X62A X62B
T85.9	15	MSPNG SPNG
	21B	X62A X62B
T85.50	06	G70A G70B G70C
	15	MSPNG SPNG
T85.51	06	G70A G70B G70C
	15	MSPNG SPNG
T85.52	06	G70A G70B G70C
	15	MSPNG SPNG
T85.53	06	G70A G70B G70C
	15	MSPNG SPNG
T85.54	06	G70A G70B G70C
	15	MSPNG SPNG
T85.59	06	G70A G70B G70C
	15	MSPNG SPNG
T85.71	11	L68A L68B L68C
	15	MSPNG SPNG
T85.72	01	B72A B72B
	15	MSPNG SPNG
T85.73	15	MSPNG SPNG
	21B	X62A X62B
T85.74	06	G71A G71B
T85.75	07	H64A H64B H64C
T85.76	06	G70A G70B G70C
	15	MSPNG SPNG
T85.78	15	MSPNG SPNG
	18B	T61A T61B
T85.81	01	B81A B81B B81C
	15	MSPNG SPNG
T85.82	09	J01A J01B J67Z
	15	MSPNG SPNG
T85.83	15	MSPNG SPNG
	21B	X62A X62B
T85.88	15	MSPNG SPNG
	21B	X62A X62B
T86.00	Prä	A04A A11C A93A A97A A97B A97C A97D
	16	Q60A Q60B Q60C
	17	R50A R60A R60B R60C R60D
T86.01	Prä	A04A A11C A93A A97A A97B A97C A97D
	16	Q60A Q60B Q60C
	17	R50A R60A R60B R60C R60D
T86.02	Prä	A04A A11C A93A A97A A97B A97C A97D
	16	Q60A Q60B Q60C
	17	R50A R60A R60B R60C R60D
T86.2	05	F75A F75B F75C F75D
	15	MSPNG SPNG
	Prä	A11C A60A A60B A60C
T86.3	05	F75A F75B F75C F75D
	15	MSPNG SPNG
	Prä	A11C A60A A60B A60C
T86.05	Prä	A04A A11C A93A A97A A97B A97C A97D
	16	Q60A Q60B Q60C
	17	R50A R60A R60B R60C R60D
T86.06	Prä	A04A A11C A93A A97A A97B A97C A97D
	16	Q60A Q60B Q60C
	17	R50A R60A R60B R60C R60D
T86.07	Prä	A04A A11C A93A A97A A97B A97C A97D
	16	Q60A Q60B Q60C
	17	R50A R60A R60B R60C R60D R61A R61B R61C
T86.09	Prä	A04A A11C A93A A97A A97B A97C A97D
	16	Q60A Q60B Q60C
	17	R50A R60A R60B R60C R60D
T86.9	15	MSPNG SPNG
	21B	X62A X62B
	Prä	A11C
T86.10	11	L68A L68B L68C L69A L69B
	15	MSPNG SPNG
	Prä	A11C A60A A60B A60C
T86.11	11	L68A L68B L68C L69A L69B
	15	MSPNG SPNG
	Prä	A11C A60A A60B A60C
T86.12	11	L69A L69B
	15	MSPNG SPNG
	Prä	A11C A60A A60B A60C
T86.19	11	L68A L68B L68C L69A L69B
	15	MSPNG SPNG
	Prä	A11C A60A A60B A60C
T86.40	07	H63A H63B H63C H63D
	15	MSPNG SPNG
	Prä	A11C A60A A60B A60C
T86.41	07	H63A H63B H63C H63D
	15	MSPNG SPNG
	Prä	A11C A60A A60B A60C

DIAG

ICD	MDC	DRG
T86.49	07	H63A H63B H63C
		H63D
	15	MSPNG SPNG
	Prä	A11C A60A A60B
		A60C
T86.50	15	MSPNG SPNG
	21B	X62A X62B
	Prä	A11C
T86.51	15	MSPNG SPNG
	21B	X62A X62B
	Prä	A11C
T86.52	15	MSPNG SPNG
	21B	X62A X62B
	Prä	A11C
T86.59	15	MSPNG SPNG
	21B	X62A X62B
	Prä	A11C
T86.81	04	E75A E75B E75C
	15	MSPNG SPNG
	Prä	A11C A60A A60B
		A60C
T86.82	07	H62A H62B H62C
	15	MSPNG SPNG
	Prä	A11C A60A A60B
		A60C
T86.83	Prä	A11C
	02	C60A C60B
T86.88	15	MSPNG SPNG
	21B	X62A X62B
	Prä	A11C
T87.0	Prä	A11C
	08	I02A I02B I02C
		I32A I32B I32C
		I32D I32E I32F
		I73A I73B
T87.1	Prä	A11C
	08	I73A I73B
T87.2	08	I73A I73B
T87.3	08	I76A I76B
T87.4	08	I76A I76B
T87.5	08	I76A I76B
T87.6	08	I76A I76B
T88.0	18B	T64A T64B T64C
T88.1	15	MSPNG SPNG
	21B	X62A X62B
T88.2	21B	X64Z
T88.3	15	MSPNG SPNG
	21B	X62A X62B
	Prä	A11C
T88.4	21B	X62A X62B
T88.5	21B	X62A X62B
T88.6	21B	X60A X60B X60C
T88.7	21B	X62A X62B
T88.8	21B	X62A X62B
T88.9	21B	X62A X62B
T89.00		PTR
	21A	W61A W61B W61C
	21B	X60A X60B X60C
	Prä	A95C
T89.01		PTR
	21A	W61A W61B W61C
	21B	X60A X60B X60C
	Prä	A95C
T89.02		PTR
	21A	W61A W61B W61C
	21B	X60A X60B X60C
	Prä	A95C
T89.03		PTR
	21A	W61A W61B W61C
	21B	X60A X60B X60C

ICD	MDC	DRG
	Prä	A95C
T90.0	Prä	961Z
T90.1	Prä	961Z
T90.2	Prä	961Z
T90.3	Prä	961Z
T90.4	Prä	961Z A95C
	21A	W61A W61B W61C
T90.5	Prä	961Z
T90.8	Prä	961Z A95C
	21A	W61A W61B W61C
T90.9	Prä	961Z A95C
	21A	W61A W61B W61C
T91.0	Prä	961Z
T91.1	Prä	961Z
T91.2	Prä	961Z
T91.3	Prä	961Z
T91.4	Prä	961Z A95C
	21A	W61A W61B W61C
T91.5	Prä	961Z
T91.8	Prä	961Z A95C
	21A	W61A W61B W61C
T91.9	Prä	961Z A95C
	21A	W61A W61B W61C
T92.0	Prä	961Z
T92.1	Prä	961Z
T92.2	Prä	961Z
T92.3	Prä	961Z
T92.4	Prä	961Z
T92.5	Prä	961Z
T92.6	Prä	961Z
T92.8	Prä	961Z
T92.9	Prä	961Z A95C
	21A	W61A W61B W61C
T93.0	Prä	961Z
T93.1	Prä	961Z
T93.2	Prä	961Z
T93.3	Prä	961Z
T93.4	Prä	961Z
T93.5	Prä	961Z
T93.6	Prä	961Z
T93.8	Prä	961Z
T93.9	Prä	961Z A95C
	21A	W61A W61B W61C
T94.0	Prä	961Z
T94.1	Prä	961Z A95C
	21A	W61A W61B W61C
T95.0	Prä	961Z
T95.1	Prä	961Z
T95.2	Prä	961Z
T95.3	Prä	961Z
T95.4	Prä	961Z
T95.8	Prä	961Z
T95.9	Prä	961Z
T96	Prä	961Z A95C
	21A	W61A W61B W61C
T97	Prä	961Z A95C
	21A	W61A W61B W61C
T98.0	Prä	961Z A95C
	21A	W61A W61B W61C
T98.1	Prä	961Z A95C
	21A	W61A W61B W61C
T98.2	Prä	961Z A95C
	21A	W61A W61B W61C
T98.3	Prä	961Z A95C
	21A	W61A W61B W61C
U04.9	04	E77A E77B E77C
U07.0	Prä	961Z
U07.1	Prä	961Z A11C
U07.2	Prä	961Z
U07.6	Prä	961Z

ICD	MDC	DRG
U07.7	Prä	961Z
U07.8	Prä	961Z
U07.9	Prä	961Z
U08.9	23	Z64A Z64B Z64C
U09.9	Prä	961Z
U10.9	Prä	A11C
	16	Q60A Q60B Q60C
U11.9	Prä	961Z
U12.9	Prä	961Z
U13.0	Prä	961Z
U13.1	Prä	961Z
U13.2	Prä	961Z
U13.3	Prä	961Z
U13.4	Prä	961Z
U13.5	Prä	961Z
U13.6	Prä	961Z
U13.7	Prä	961Z
U13.8	Prä	961Z
U13.9	Prä	961Z
U14.0	Prä	961Z
U14.1	Prä	961Z
U14.2	Prä	961Z
U14.3	Prä	961Z
U14.4	Prä	961Z
U14.5	Prä	961Z
U14.6	Prä	961Z
U14.7	Prä	961Z
U14.8	Prä	961Z
U14.9	Prä	961Z
U15.0	Prä	961Z
U15.1	Prä	961Z
U15.2	Prä	961Z
U15.3	Prä	961Z
U15.4	Prä	961Z
U15.5	Prä	961Z
U15.6	Prä	961Z
U15.7	Prä	961Z
U15.8	Prä	961Z
U15.9	Prä	961Z
U16.0	Prä	961Z
U16.1	Prä	961Z
U16.2	Prä	961Z
U16.3	Prä	961Z
U16.4	Prä	961Z
U16.5	Prä	961Z
U16.6	Prä	961Z
U16.7	Prä	961Z
U16.8	Prä	961Z
U16.9	Prä	961Z
U17.0	Prä	961Z
U17.1	Prä	961Z
U17.2	Prä	961Z
U17.3	Prä	961Z
U17.4	Prä	961Z
U17.5	Prä	961Z
U17.6	Prä	961Z
U17.7	Prä	961Z
U17.8	Prä	961Z
U17.9	Prä	961Z
U18.0	Prä	961Z
U18.1	Prä	961Z
U18.2	Prä	961Z
U18.3	Prä	961Z
U18.4	Prä	961Z
U18.5	Prä	961Z
U18.6	Prä	961Z
U18.7	Prä	961Z
U18.8	Prä	961Z
U18.9	Prä	961Z
U19.0	Prä	961Z

ICD	MDC	DRG
U19.1	Prä	961Z
U19.2	Prä	961Z
U19.3	Prä	961Z
U19.4	Prä	961Z
U19.5	Prä	961Z
U19.6	Prä	961Z
U19.7	Prä	961Z
U19.8	Prä	961Z
U19.9	Prä	961Z
U20.0	Prä	961Z
U20.1	Prä	961Z
U20.2	Prä	961Z
U20.3	Prä	961Z
U20.4	Prä	961Z
U20.5	Prä	961Z
U20.6	Prä	961Z
U20.7	Prä	961Z
U20.8	Prä	961Z
U20.9	Prä	961Z
U21.0	Prä	961Z
U21.1	Prä	961Z
U21.2	Prä	961Z
U21.3	Prä	961Z
U21.4	Prä	961Z
U21.5	Prä	961Z
U21.6	Prä	961Z
U21.7	Prä	961Z
U21.8	Prä	961Z
U21.9	Prä	961Z
U22.0	Prä	961Z
U22.1	Prä	961Z
U22.2	Prä	961Z
U22.3	Prä	961Z
U22.4	Prä	961Z
U22.5	Prä	961Z
U22.6	Prä	961Z
U22.7	Prä	961Z
U22.8	Prä	961Z
U22.9	Prä	961Z
U23.0	Prä	961Z
U23.1	Prä	961Z
U23.2	Prä	961Z
U23.3	Prä	961Z
U23.4	Prä	961Z
U23.5	Prä	961Z
U23.6	Prä	961Z
U23.7	Prä	961Z
U23.8	Prä	961Z
U23.9	Prä	961Z
U24.0	Prä	961Z
U24.1	Prä	961Z
U24.2	Prä	961Z
U24.3	Prä	961Z
U24.4	Prä	961Z
U24.5	Prä	961Z
U24.6	Prä	961Z
U24.7	Prä	961Z
U24.8	Prä	961Z
U24.9	Prä	961Z
U25.0	Prä	961Z
U25.1	Prä	961Z
U25.2	Prä	961Z
U25.3	Prä	961Z
U25.4	Prä	961Z
U25.5	Prä	961Z
U25.6	Prä	961Z
U25.7	Prä	961Z
U25.8	Prä	961Z
U25.9	Prä	961Z
U26.0	Prä	961Z

ICD	MDC	DRG
U26.1	Prä	961Z
U26.2	Prä	961Z
U26.3	Prä	961Z
U26.4	Prä	961Z
U26.5	Prä	961Z
U26.6	Prä	961Z
U26.7	Prä	961Z
U26.8	Prä	961Z
U26.9	Prä	961Z
U27.0	Prä	961Z
U27.1	Prä	961Z
U27.2	Prä	961Z
U27.3	Prä	961Z
U27.4	Prä	961Z
U27.5	Prä	961Z
U27.6	Prä	961Z
U27.7	Prä	961Z
U27.8	Prä	961Z
U27.9	Prä	961Z
U28.0	Prä	961Z
U28.1	Prä	961Z
U28.2	Prä	961Z
U28.3	Prä	961Z
U28.4	Prä	961Z
U28.5	Prä	961Z
U28.6	Prä	961Z
U28.7	Prä	961Z
U28.8	Prä	961Z
U28.9	Prä	961Z
U29.0	Prä	961Z
U29.1	Prä	961Z
U29.2	Prä	961Z
U29.3	Prä	961Z
U29.4	Prä	961Z
U29.5	Prä	961Z
U29.6	Prä	961Z
U29.7	Prä	961Z
U29.8	Prä	961Z
U29.9	Prä	961Z
U30.0	Prä	961Z
U30.1	Prä	961Z
U30.2	Prä	961Z
U30.3	Prä	961Z
U30.4	Prä	961Z
U30.5	Prä	961Z
U30.6	Prä	961Z
U30.7	Prä	961Z
U30.8	Prä	961Z
U30.9	Prä	961Z
U31.0	Prä	961Z
U31.1	Prä	961Z
U31.2	Prä	961Z
U31.3	Prä	961Z
U31.4	Prä	961Z
U31.5	Prä	961Z
U31.6	Prä	961Z
U31.7	Prä	961Z
U31.8	Prä	961Z
U31.9	Prä	961Z
U32.0	Prä	961Z
U32.1	Prä	961Z
U32.2	Prä	961Z
U32.3	Prä	961Z
U32.4	Prä	961Z
U32.5	Prä	961Z
U32.6	Prä	961Z
U32.7	Prä	961Z
U32.8	Prä	961Z
U32.9	Prä	961Z
U33.0	Prä	961Z

ICD	MDC	DRG
U33.1	Prä	961Z
U33.2	Prä	961Z
U33.3	Prä	961Z
U33.4	Prä	961Z
U33.5	Prä	961Z
U33.6	Prä	961Z
U33.7	Prä	961Z
U33.8	Prä	961Z
U33.9	Prä	961Z
U34.0	Prä	961Z
U34.1	Prä	961Z
U34.2	Prä	961Z
U34.3	Prä	961Z
U34.4	Prä	961Z
U34.5	Prä	961Z
U34.6	Prä	961Z
U34.7	Prä	961Z
U34.8	Prä	961Z
U34.9	Prä	961Z
U35.0	Prä	961Z
U35.1	Prä	961Z
U35.2	Prä	961Z
U35.3	Prä	961Z
U35.4	Prä	961Z
U35.5	Prä	961Z
U35.6	Prä	961Z
U35.7	Prä	961Z
U35.8	Prä	961Z
U35.9	Prä	961Z
U36.0	Prä	961Z
U36.1	Prä	961Z
U36.2	Prä	961Z
U36.3	Prä	961Z
U36.4	Prä	961Z
U36.5	Prä	961Z
U36.6	Prä	961Z
U36.7	Prä	961Z
U36.8	Prä	961Z
U36.9	Prä	961Z
U37.0	Prä	961Z
U37.1	Prä	961Z
U37.2	Prä	961Z
U37.3	Prä	961Z
U37.4	Prä	961Z
U37.5	Prä	961Z
U37.6	Prä	961Z
U37.7	Prä	961Z
U37.8	Prä	961Z
U37.9	Prä	961Z
U38.0	Prä	961Z
U38.1	Prä	961Z
U38.2	Prä	961Z
U38.3	Prä	961Z
U38.4	Prä	961Z
U38.5	Prä	961Z
U38.6	Prä	961Z
U38.7	Prä	961Z
U38.8	Prä	961Z
U38.9	Prä	961Z
U39.0	Prä	961Z
U39.1	Prä	961Z
U39.2	Prä	961Z
U39.3	Prä	961Z
U39.4	Prä	961Z
U39.5	Prä	961Z
U39.6	Prä	961Z
U39.7	Prä	961Z
U39.8	Prä	961Z
U39.9	Prä	961Z
U40.0	Prä	961Z

DIAG

ICD	MDC	DRG
U40.1	Prä	961Z
U40.2	Prä	961Z
U40.3	Prä	961Z
U40.4	Prä	961Z
U40.5	Prä	961Z
U40.6	Prä	961Z
U40.7	Prä	961Z
U40.8	Prä	961Z
U40.9	Prä	961Z
U41.0	Prä	961Z
U41.1	Prä	961Z
U41.2	Prä	961Z
U41.3	Prä	961Z
U41.4	Prä	961Z
U41.5	Prä	961Z
U41.6	Prä	961Z
U41.7	Prä	961Z
U41.8	Prä	961Z
U41.9	Prä	961Z
U42.0	Prä	961Z
U42.1	Prä	961Z
U42.2	Prä	961Z
U42.3	Prä	961Z
U42.4	Prä	961Z
U42.5	Prä	961Z
U42.6	Prä	961Z
U42.7	Prä	961Z
U42.8	Prä	961Z
U42.9	Prä	961Z
U43.0	Prä	961Z
U43.1	Prä	961Z
U43.2	Prä	961Z
U43.3	Prä	961Z
U43.4	Prä	961Z
U43.5	Prä	961Z
U43.6	Prä	961Z
U43.7	Prä	961Z
U43.8	Prä	961Z
U43.9	Prä	961Z
U44.0	Prä	961Z
U44.1	Prä	961Z
U44.2	Prä	961Z
U44.3	Prä	961Z
U44.4	Prä	961Z
U44.5	Prä	961Z
U44.6	Prä	961Z
U44.7	Prä	961Z
U44.8	Prä	961Z
U44.9	Prä	961Z
U45.0	Prä	961Z
U45.1	Prä	961Z
U45.2	Prä	961Z
U45.3	Prä	961Z
U45.4	Prä	961Z
U45.5	Prä	961Z
U45.6	Prä	961Z
U45.7	Prä	961Z
U45.8	Prä	961Z
U45.9	Prä	961Z
U46.0	Prä	961Z
U46.1	Prä	961Z
U46.2	Prä	961Z
U46.3	Prä	961Z
U46.4	Prä	961Z
U46.5	Prä	961Z
U46.6	Prä	961Z
U46.7	Prä	961Z
U46.8	Prä	961Z
U46.9	Prä	961Z
U47.0	Prä	961Z
U47.1	Prä	961Z
U47.2	Prä	961Z
U47.3	Prä	961Z
U47.4	Prä	961Z
U47.5	Prä	961Z
U47.6	Prä	961Z
U47.7	Prä	961Z
U47.8	Prä	961Z
U47.9	Prä	961Z
U48.0	Prä	961Z
U48.1	Prä	961Z
U48.2	Prä	961Z
U48.3	Prä	961Z
U48.4	Prä	961Z
U48.5	Prä	961Z
U48.6	Prä	961Z
U48.7	Prä	961Z
U48.8	Prä	961Z
U48.9	Prä	961Z
U49.0	Prä	961Z
U49.1	Prä	961Z
U49.2	Prä	961Z
U49.3	Prä	961Z
U49.4	Prä	961Z
U49.5	Prä	961Z
U49.6	Prä	961Z
U49.7	Prä	961Z
U49.8	Prä	961Z
U49.9	Prä	961Z
U50.00	Prä	961Z
U50.01	Prä	961Z
U50.10	Prä	961Z
U50.11	Prä	961Z
U50.20	Prä	961Z
U50.21	Prä	961Z
U50.30	Prä	961Z
U50.31	Prä	961Z
U50.40	Prä	961Z A95F A97D
	01	B70A B70B B70D
	11	L63A L63B
U50.41	Prä	961Z A95F A97D
	01	B70A B70B B70D
	11	L63A L63B
U50.50	Prä	961Z A95F A97D
	01	B70A B70B B70D
	11	L63A L63B
U50.51	Prä	961Z A95F A97D
	01	B70A B70B B70D
	11	L63A L63B
U51.00	Prä	961Z
U51.01	Prä	961Z
U51.02	Prä	961Z
U51.10	Prä	961Z
U51.11	Prä	961Z
U51.12	Prä	961Z
U51.20	Prä	961Z
U51.21	Prä	961Z
U51.22	Prä	961Z
U52.0	Prä	961Z
U52.1	Prä	961Z
U52.2	Prä	961Z
	01	B70A B70B
U52.3	Prä	961Z
	01	B70A B70B
U55.10	Prä	961Z
	15	P65B P66B P66C
		P67A P67B P67C
U55.11	Prä	961Z
	15	P65B P66B P66C
		P67A P67B P67C
U55.12		HAK
	15	P65B P66B P66C
		P67A P67B P67C
	Prä	961Z
U55.20	Prä	961Z
	15	P65B P66B P66C
		P67A P67B P67C
U55.21	Prä	961Z
	15	P65B P66B P66C
		P67A P67B P67C
U55.22		HAK
	15	P65B P66B P66C
		P67A P67B P67C
	Prä	961Z
U55.30	Prä	961Z
	15	P65B P66B P66C
		P67A P67B P67C
U55.31	Prä	961Z
	15	P65B P66B P66C
		P67A P67B P67C
U55.32		HAK
	15	P65B P66B P66C
		P67A P67B P67C
	Prä	961Z
U60.1	Prä	961Z
	18B	T63A
U60.2	Prä	961Z
	18B	T63A
U60.3	Prä	961Z
	18B	T63A
U60.9	Prä	961Z
	18B	T63A
U61.1	Prä	961Z
	18B	T63A
U61.2	Prä	961Z
	18B	T63A
U61.3	Prä	961Z
	18B	T63A
U61.9	Prä	961Z
	18B	T63A
U69.01	Prä	961Z
U69.02	Prä	961Z
U69.03	Prä	961Z
U69.6	Prä	961Z
U69.10	Prä	961Z
U69.11	Prä	961Z
U69.12	Prä	961Z
U69.13	Prä	961Z
U69.20	Prä	961Z A11C
U69.21	Prä	961Z A11C
U69.30	Prä	961Z
U69.31	Prä	961Z
U69.32	Prä	961Z
U69.33	Prä	961Z
U69.34	Prä	961Z
U69.35	Prä	961Z
U69.36	Prä	961Z
U69.40	Prä	961Z
U69.50	Prä	961Z
U69.51	Prä	961Z
U69.52	Prä	961Z
U69.53	Prä	961Z
U69.54	Prä	961Z
U69.55	Prä	961Z
U80.00	Prä	961Z
	05	F61A
U80.01	Prä	961Z
	05	F61A
U80.8	Prä	961Z
	05	F61A

ICD	MDC	DRG
U80.10	Prä	961Z
	05	F61A
U80.11	Prä	961Z
	05	F61A
U80.20	Prä	961Z
	05	F61A
U80.21	Prä	961Z
	05	F61A
U80.30	Prä	961Z
	05	F61A
U80.31	Prä	961Z
	05	F61A
U81.00	Prä	961Z
	05	F61A
U81.01	Prä	961Z
	05	F61A
U81.02	Prä	961Z
	05	F61A
U81.03	Prä	961Z
	05	F61A
U81.04	Prä	961Z
	05	F61A
U81.05	Prä	961Z
	05	F61A
U81.06	Prä	961Z
	05	F61A
U81.6	Prä	961Z
	05	F61A
U81.07	Prä	961Z
	05	F61A
U81.08	Prä	961Z
	05	F61A
U81.8	Prä	961Z
	05	F61A
U81.10	Prä	961Z
	05	F61A
U81.11	Prä	961Z
	05	F61A
U81.20	Prä	961Z
	05	F61A
U81.21	Prä	961Z
	05	F61A
U81.22	Prä	961Z
	05	F61A
U81.23	Prä	961Z
	05	F61A
U81.24	Prä	961Z
	05	F61A
U81.25	Prä	961Z
	05	F61A
U81.26	Prä	961Z
	05	F61A
U81.27	Prä	961Z
	05	F61A
U81.28	Prä	961Z
	05	F61A
U81.30	Prä	961Z
	05	F61A
U81.31	Prä	961Z
	05	F61A
U81.40	Prä	961Z
	05	F61A
U81.41	Prä	961Z
	05	F61A
U81.42	Prä	961Z
	05	F61A
U81.43	Prä	961Z
	05	F61A
U81.44	Prä	961Z
	05	F61A
U81.45	Prä	961Z
	05	F61A
U81.46	Prä	961Z
	05	F61A
U81.47	Prä	961Z
	05	F61A
U81.48	Prä	961Z
	05	F61A
U81.50	Prä	961Z
	05	F61A
U81.51	Prä	961Z
	05	F61A
U82.0	Prä	961Z
	04	E76A
	05	F61A
U82.1	Prä	961Z
	04	E76A
	05	F61A
U82.2	Prä	961Z
	04	E76A
	05	F61A
U83	Prä	961Z
	05	F61A
U84	Prä	961Z
	05	F61A
U85	Prä	961Z
	05	F61A
	18B	T63A
U98.0	Prä	961Z
U98.1	Prä	961Z
U98.2	Prä	961Z
U98.3	Prä	961Z
U98.4	Prä	961Z
U98.5	Prä	961Z
U98.6	Prä	961Z
U98.7	Prä	961Z
U98.8	Prä	961Z
U98.9	Prä	961Z
U99.0	Prä	961Z
U99.1	Prä	961Z
U99.2	Prä	961Z
U99.3	Prä	961Z
U99.4	Prä	961Z
U99.5	Prä	961Z
U99.6	Prä	961Z
U99.7	Prä	961Z
U99.8	Prä	961Z
U99.9	Prä	961Z
X84.9	20	V02B
Y09.9	20	V02B
Z00.0	Prä	961Z
Z00.1	Prä	961Z
Z00.2	Prä	961Z
Z00.3	Prä	961Z
Z00.4	Prä	961Z
Z00.5	23	Z64A Z64B
Z00.6	Prä	961Z
Z00.8	Prä	961Z
Z01.0	23	Z64A Z64B Z64C
Z01.1	23	Z64A Z64B Z64C
Z01.2	23	Z64A Z64B Z64C
Z01.3	23	Z64A Z64B Z64C
Z01.4	13	N62A N62B
Z01.5	23	Z64A Z64B Z64C
Z01.6	Prä	961Z
Z01.7	Prä	961Z
Z01.9	Prä	961Z
Z01.80	05	F24A F24B F24C
		F49A F49C F62A
		F70A F70B
Z01.81	05	F49A F49C F75A
		F75B F75C F75D
Z01.88	23	Z64A Z64B Z64C
Z02	23	Z64A Z64B Z64C
Z03.0	04	E77A E77B E77C
	15	P65B P66B P66C
		P67A P67B P67C
Z03.1	17	R62A R62B
Z03.2	19	U66A U66B U66C
		U66D
Z03.3	01	B80A B80B
Z03.4	05	F74A F74B
Z03.5	05	F74A F74B
Z03.6	23	Z64A Z64B Z64C
Z03.8	23	Z64A Z64B Z64C
Z03.9	23	Z64A Z64B Z64C
Z04.1	21B	X64Z
Z04.2	21B	X64Z
Z04.3	21B	X64Z
Z04.5	21B	X64Z
Z04.8	23	Z64A Z64B Z64C
Z04.9	Prä	961Z
Z08.0	23	Z64A Z64B Z64C
Z08.1	23	Z64A Z64B Z64C
Z08.2	23	Z64A Z64B Z64C
Z08.7	23	Z64A Z64B Z64C
Z08.8	23	Z64A Z64B Z64C
Z08.9	23	Z64A Z64B Z64C
Z09.0	23	Z64A Z64B Z64C
Z09.1	23	Z64A Z64B Z64C
Z09.2	23	Z64A Z64B Z64C
Z09.3	23	Z64A Z64B Z64C
Z09.4	23	Z64A Z64B Z64C
Z09.7	23	Z64A Z64B Z64C
Z09.9	23	Z64A Z64B Z64C
Z09.80	23	Z64A Z64B
Z09.88	23	Z64A Z64B Z64C
Z10	23	Z64A Z64B Z64C
Z11	23	Z64A Z64B Z64C
Z12.0	23	Z64A Z64B Z64C
Z12.1	23	Z64A Z64B Z64C
Z12.2	23	Z64A Z64B Z64C
Z12.3	23	Z64A Z64B Z64C
Z12.4	23	Z64A Z64B Z64C
Z12.5	23	Z64A Z64B Z64C
Z12.6	23	Z64A Z64B Z64C
Z12.8	23	Z64A Z64B Z64C
Z12.9	23	Z64A Z64B Z64C
Z13.0	23	Z64A Z64B Z64C
Z13.1	23	Z64A Z64B Z64C
Z13.2	23	Z64A Z64B Z64C
Z13.4	23	Z64A Z64B Z64C
Z13.5	23	Z64A Z64B Z64C
Z13.6	23	Z64A Z64B Z64C
Z13.7	23	Z64A Z64B Z64C
Z13.8	23	Z64A Z64B Z64C
Z13.9	23	Z64A Z64B Z64C
Z20.0	23	Z64A Z64B Z64C
Z20.1	15	P65B P66B P66C
		P67A P67B P67C
	23	Z64A Z64B
Z20.2	23	Z64A Z64B Z64C
Z20.3	23	Z64A Z64B Z64C
Z20.4	23	Z64A Z64B Z64C
Z20.5	23	Z64A Z64B Z64C
Z20.6	23	Z64A Z64B Z64C
Z20.7	23	Z64A Z64B Z64C
Z20.8	23	Z64A Z64B Z64C
Z20.9	23	Z64A Z64B Z64C
Z21	Prä	961Z

DIAG

ICD	MDC	DRG
	14	O01B O01C O01D O01E O01F
Z22.0	23	Z64A Z64B Z64C
Z22.1	23	Z64A Z64B Z64C
Z22.2	23	Z64A Z64B Z64C
Z22.3	23	Z64A Z64B Z64C
Z22.4	23	Z64A Z64B Z64C
Z22.6	17	R62A R62B
Z22.7	Prä	A11C
	04	E76A E76B E76C E76D
Z22.8	23	Z64A Z64B Z64C
Z22.9	23	Z64A Z64B Z64C
Z23.0	23	Z64A Z64B Z64C
Z23.1	23	Z64A Z64B Z64C
Z23.2	23	Z64A Z64B Z64C
Z23.3	23	Z64A Z64B Z64C
Z23.4	23	Z64A Z64B Z64C
Z23.5	23	Z64A Z64B Z64C
Z23.6	23	Z64A Z64B Z64C
Z23.7	23	Z64A Z64B Z64C
Z23.8	23	Z64A Z64B Z64C
Z24.0	23	Z64A Z64B Z64C
Z24.1	23	Z64A Z64B Z64C
Z24.2	23	Z64A Z64B Z64C
Z24.3	23	Z64A Z64B Z64C
Z24.4	23	Z64A Z64B Z64C
Z24.5	23	Z64A Z64B Z64C
Z24.6	23	Z64A Z64B Z64C
Z25.0	23	Z64A Z64B Z64C
Z25.1	23	Z64A Z64B Z64C
Z25.8	23	Z64A Z64B Z64C
Z26.0	23	Z64A Z64B Z64C
Z26.8	23	Z64A Z64B Z64C
Z26.9	23	Z64A Z64B Z64C
Z27.0	23	Z64A Z64B Z64C
Z27.1	23	Z64A Z64B Z64C
Z27.2	23	Z64A Z64B Z64C
Z27.3	23	Z64A Z64B Z64C
Z27.4	23	Z64A Z64B Z64C
Z27.8	23	Z64A Z64B Z64C
Z27.9	23	Z64A Z64B Z64C
Z28	23	Z64A Z64B Z64C
Z29.0	23	Z64A Z64B Z64C
Z29.1	23	Z64A Z64B Z64C
Z29.8	23	Z64A Z64B Z64C
Z29.9	23	Z64A Z64B Z64C
Z29.20	23	Z64A Z64B Z64C
Z29.21	23	Z64A Z64B Z64C
Z29.22	23	Z64A Z64B Z64C
Z29.28	23	Z64A Z64B Z64C
Z30.0	23	Z64A Z64B Z64C
Z30.1	23	Z64A Z64B Z64C
Z30.2	12	M64Z
	13	N62A N62B
Z30.3	23	Z64A Z64B Z64C
Z30.4	23	Z64A Z64B Z64C
Z30.5	23	Z64A Z64B Z64C
Z30.8	23	Z64A Z64B Z64C
Z30.9	23	Z64A Z64B Z64C
Z31.0	12	M64Z
	13	N62A N62B
Z31.1	13	N62A N62B
Z31.2	13	N62A N62B
Z31.3	12	M64Z
	13	N62A N62B
Z31.4	12	M64Z
	13	N62A N62B
Z31.5	23	Z64A Z64B Z64C
Z31.6	23	Z64A Z64B Z64C
Z31.8	23	Z64A Z64B Z64C
Z31.9	23	Z64A Z64B Z64C
Z32	Prä	961Z
Z33	Prä	961Z
Z34	Prä	961Z
Z35.0	Prä	961Z
Z35.1	Prä	961Z
Z35.2	Prä	961Z
Z35.3	Prä	961Z
Z35.4	Prä	961Z
Z35.5	Prä	961Z
Z35.6	Prä	961Z
Z35.8	Prä	961Z
Z35.9	Prä	961Z
Z36.0	14	O65A O65B O65C O65D
Z36.1	14	O65A O65B O65C O65D
Z36.2	14	O65A O65B O65C O65D
Z36.3	14	O65A O65B O65C O65D
Z36.4	14	O65A O65B O65C O65D
Z36.5	14	O65A O65B O65C O65D
Z36.8	14	O65A O65B O65C O65D
Z36.9	14	O65A O65B O65C O65D
Z37.0	Prä	961Z
	14	O02A O02B O50A O50B O60A O60B O60C O60D
Z37.1	Prä	961Z
	14	O02A O02B O50A O50B O60A O60B O60C O60D
Z37.2	Prä	961Z
	14	O01B O01C O01D O01E O01F O02A O02B O50A O50B O60A O60B O60C
Z37.3	Prä	961Z
	14	O01B O01C O01D O01E O01F O02A O02B O50A O50B O60A O60B O60C
Z37.4	Prä	961Z
	14	O01B O01C O01D O01E O01F O02A O02B O50A O50B O60A O60B O60C
Z37.5	Prä	961Z
	14	O01B O01C O01D O01E O01F O02A O02B O50A O50B O60A O60B O60C
Z37.6	Prä	961Z
	14	O01B O01C O01D O01E O01F O02A O02B O50A O50B O60A O60B O60C
Z37.7	Prä	961Z
	14	O01B O01C O01D O01E O01F O02A O02B O50A O50B O60A O60B O60C
Z37.9	Prä	961Z
	14	O02A O02B O50A O50B O60A O60B O60C O60D
Z38.0	Prä	963Z
Z38.1	Prä	963Z
Z38.2	Prä	963Z
Z38.3	Prä	963Z
	15	P05A P05B P05C P05D P66A P66B P66C P66D
Z38.4	Prä	963Z
	15	P05A P05B P05C P05D P66A P66B P66C P66D
Z38.5	Prä	963Z
	15	P05A P05B P05C P05D P66A P66B P66C P66D
Z38.6	Prä	963Z
	15	P05A P05B P05C P05D P66A P66B P66C P66D
Z38.7	Prä	963Z
	15	P05A P05B P05C P05D P66A P66B P66C P66D
Z38.8	Prä	963Z
	15	P05A P05B P05C P05D P66A P66B P66C P66D
Z39.0	14	O04Z O61Z
Z39.1	14	O04Z O61Z
Z39.2	14	O04Z O61Z
Z40.00	09	J01A J01B J02A J02B J06A J06B J08Z J14Z J23A J23B J25Z J62A J62B J67Z
Z40.01	13	N62A N62B
Z40.08	12	M64Z
	13	N62A N62B
Z40.8	23	Z64A Z64B Z64C
Z40.9	23	Z64A Z64B Z64C
Z41.1	09	J67Z
Z41.2	12	M62A M62B
	13	N62A N62B
Z41.8	23	Z64A Z64B Z64C
Z41.9	23	Z64A Z64B Z64C
Z42.0	09	J67Z
Z42.1	09	J67Z
Z42.2	09	J67Z
Z42.3	09	J67Z
Z42.4	09	J67Z
Z42.8	09	J67Z
Z42.9	09	J67Z
Z43.0	04	E75A E75B E75C
Z43.1	06	G71A G71B
Z43.2	06	G71A G71B
Z43.3	06	G71A G71B
Z43.4	06	G71A G71B
Z43.5	11	L68A L68B L68C
Z43.6	11	L68A L68B L68C
Z43.7	13	N62A N62B
Z43.9	23	Z64A Z64B Z64C
Z43.80	23	Z64A Z64B Z64C
Z43.88	23	Z64A Z64B Z64C
Z44.0	08	I73A I73B
Z44.1	08	I73A I73B
Z44.2	23	Z64A Z64B Z64C
Z44.3	09	J67Z
Z44.8	Prä	961Z

ICD	MDC	DRG
Z44.9	Prä	961Z
Z45.00	05	F66A F66B
Z45.01	05	F66A F66B
Z45.1	23	Z64A Z64B Z64C
Z45.02	23	Z64A Z64B
Z45.3	23	Z64A Z64B
Z45.08	05	F66A F66B
Z45.9	23	Z64A Z64B Z64C
Z45.20	23	Z64A Z64B Z64C
Z45.29	23	Z64A Z64B Z64C
Z45.80	23	Z64A Z64B Z64C
Z45.81	23	Z64A Z64B
Z45.82	23	Z64A Z64B Z64C
Z45.84	23	Z64A Z64B Z64C
Z45.85	23	Z64A Z64B Z64C
Z45.88	23	Z64A Z64B Z64C
Z46.0	23	Z64A Z64B Z64C
Z46.1	23	Z64A Z64B Z64C
Z46.2	23	Z64A Z64B Z64C
Z46.3	23	Z64A Z64B Z64C
Z46.4	23	Z64A Z64B Z64C
Z46.5	06	G71A G71B
Z46.6	11	L68A L68B L68C
Z46.7	08	I73A I73B
Z46.8	23	Z64A Z64B Z64C
Z46.9	23	Z64A Z64B Z64C
Z47.0	Prä	961Z
Z47.8	08	I73A I73B
Z47.9	08	I73A I73B
Z48.0	23	Z64A Z64B Z64C
Z48.8	23	Z65A Z65B
Z48.9	23	Z65A Z65B
Z49.0	11	L60A L60B L60C
		L60D L60E L71Z
Z49.1	11	L60A L60B L60C
		L60D L60E
Z49.2	Prä	961Z
Z50.0	Prä	961Z
Z50.1	Prä	961Z
Z50.2	Prä	961Z
Z50.3	Prä	961Z
Z50.4	Prä	961Z
Z50.5	Prä	961Z
Z50.6	Prä	961Z
Z50.7	Prä	961Z
Z50.8	Prä	961Z
Z50.9	Prä	961Z
Z51.0	Prä	961Z
Z51.1	Prä	961Z
Z51.2	Prä	961Z
Z51.3	Prä	961Z
Z51.4	23	Z65A Z65B
Z51.5	Prä	961Z
Z51.6	23	Z64A Z64B Z64C
Z51.9	23	Z65A Z65B
Z51.81	Prä	961Z
Z51.82	Prä	961Z
Z51.83	23	Z65A Z65B
Z51.88	23	Z64A Z64B Z64C
Z52.00	Prä	961Z
Z52.01	23	Z64A Z64B
Z52.1	09	J67Z
Z52.2	08	I76A I76B
Z52.3	23	Z64A Z64B
Z52.4	23	Z02Z Z64A Z64B
		Z64C
Z52.5	23	Z64A Z64B Z64C
Z52.6	23	Z02Z Z64A Z64B
		Z64C
Z52.7	23	Z64A Z64B Z64C

ICD	MDC	DRG
Z52.08	23	Z64A Z64B Z64C
Z52.9	23	Z64A Z64B Z64C
Z52.80	23	Z64A Z64B Z64C
Z52.88	23	Z64A Z64B Z64C
Z53	23	Z64A Z64B Z64C
Z54.0	Prä	961Z
Z54.1	Prä	961Z
Z54.2	Prä	961Z
Z54.3	Prä	961Z
Z54.4	Prä	961Z
Z54.7	Prä	961Z
Z54.8	Prä	961Z
Z54.9	Prä	961Z
Z55	Prä	961Z
Z56	Prä	961Z
Z57	Prä	961Z
Z58	Prä	961Z
Z59	Prä	961Z
Z60	Prä	961Z
Z61	Prä	961Z
Z62	Prä	961Z
Z63	Prä	961Z
Z64.0	Prä	961Z
Z64.1	12	M64Z
	13	N62B
Z64.8	Prä	961Z
Z65	23	Z64A Z64B Z64C
Z70	Prä	961Z
Z71	23	Z64A Z64B Z64C
Z72.0	Prä	961Z
Z72.8	23	Z64A Z64B Z64C
Z72.9	23	Z64A Z64B Z64C
Z73	23	Z64A Z64B Z64C
Z74.0	23	Z64A Z64B Z64C
Z74.1	23	Z64A Z64B Z64C
Z74.2	23	Z64A Z64B Z64C
Z74.3	23	Z64A Z64B Z64C
Z74.8	23	Z64A Z64B Z64C
Z74.9	23	Z64A Z64B Z64C
Z75.2	Prä	961Z
Z75.8	Prä	961Z
Z75.9	Prä	961Z
Z75.60	Prä	961Z
	15	P65B P66B P66C
		P67A P67B P67C
Z75.64	Prä	961Z
	15	P65B P66B P66C
		P67A P67B P67C
Z75.65	Prä	961Z
	15	P65B P66B P66C
		P67A P67B P67C
Z75.66	Prä	961Z
	15	P65B P66B P66C
		P67A P67B P67C
Z75.67	Prä	961Z
	15	P65B P66B P66C
		P67A P67B P67C
Z75.68	Prä	961Z
	15	P65B P66B P66C
		P67A P67B P67C
Z75.69	Prä	961Z
	15	P65B P66B P66C
		P67A P67B P67C
Z75.70		HAK
	15	P65B P66B P66C
		P67A P67B P67C
	Prä	961Z
Z75.74		HAK
	15	P65B P66B P66C
		P67A P67B P67C

ICD	MDC	DRG
	Prä	961Z
Z75.75		HAK
	15	P65B P66B P66C
		P67A P67B P67C
	Prä	961Z
Z75.76		HAK
	15	P65B P66B P66C
		P67A P67B P67C
	Prä	961Z
Z75.77		HAK
	15	P65B P66B P66C
		P67A P67B P67C
	Prä	961Z
Z75.78	Prä	961Z
	15	P65B P66B P66C
		P67A P67B P67C
Z75.79	Prä	961Z
	15	P65B P66B P66C
		P67A P67B P67C
Z76.0	23	Z64A Z64B Z64C
Z76.1	15	P65B P66B P66C
		P67A P67B P67C
	23	Z64A Z64B Z64C
Z76.2	23	Z64A Z64B Z64C
Z76.3	Prä	961Z
Z76.4	23	Z64A Z64B Z64C
Z76.8	23	Z64A Z64B Z64C
Z76.9	23	Z64A Z64B Z64C
Z80.0	23	Z64A Z64B Z64C
Z80.1	23	Z64A Z64B Z64C
Z80.2	23	Z64A Z64B Z64C
Z80.3	09	J67Z
Z80.4	12	M64Z
	13	N62A N62B
Z80.5	23	Z64A Z64B Z64C
Z80.6	23	Z64A Z64B Z64C
Z80.7	23	Z64A Z64B Z64C
Z80.8	23	Z64A Z64B Z64C
Z80.9	23	Z64A Z64B Z64C
Z81	23	Z64A Z64B Z64C
Z82	23	Z64A Z64B Z64C
Z83.1	23	Z64A Z64B Z64C
Z83.2	23	Z64A Z64B Z64C
Z83.3	23	Z64A Z64B Z64C
Z83.4	23	Z64A Z64B Z64C
Z83.5	23	Z64A Z64B Z64C
Z83.6	23	Z64A Z64B Z64C
Z83.7	23	Z64A Z64B Z64C
Z84.0	23	Z64A Z64B Z64C
Z84.1	23	Z64A Z64B Z64C
Z84.2	23	Z64A Z64B Z64C
Z84.3	23	Z64A Z64B Z64C
Z84.8	23	Z64A Z64B Z64C
Z85.0	Prä	961Z
Z85.1	Prä	961Z
Z85.2	Prä	961Z
Z85.3	Prä	961Z
Z85.4	Prä	961Z
Z85.5	Prä	961Z
Z85.6	Prä	961Z
Z85.7	Prä	961Z
Z85.8	Prä	961Z
Z85.9	Prä	961Z
Z86.0	Prä	961Z
Z86.1	Prä	961Z
Z86.2	Prä	961Z
Z86.3	Prä	961Z
Z86.4	Prä	961Z
Z86.5	Prä	961Z
Z86.6	Prä	961Z

DIAG

ICD	MDC	DRG
Z86.7	Prä	961Z
Z87.0	Prä	961Z
Z87.1	Prä	961Z
Z87.2	Prä	961Z
Z87.3	Prä	961Z
Z87.4	Prä	961Z
Z87.5	Prä	961Z
Z87.6	Prä	961Z
Z87.7	Prä	961Z
Z87.8	Prä	961Z
Z88.0	Prä	961Z
Z88.1	Prä	961Z
Z88.2	Prä	961Z
Z88.3	Prä	961Z
Z88.4	Prä	961Z
Z88.5	Prä	961Z
Z88.6	Prä	961Z
Z88.7	Prä	961Z
Z88.8	Prä	961Z
Z88.9	Prä	961Z
Z89.0	Prä	961Z
Z89.1	Prä	961Z
Z89.2	Prä	961Z
Z89.3	Prä	961Z
Z89.4	Prä	961Z
Z89.5	Prä	961Z
Z89.6	Prä	961Z
Z89.7	Prä	961Z
Z89.8	Prä	961Z
Z89.9	Prä	961Z
Z90.0	Prä	961Z
Z90.1	Prä	961Z
Z90.2	Prä	961Z
Z90.3	15	MSPNG SPNG
	Prä	961Z
Z90.4	Prä	961Z
Z90.5	Prä	961Z
Z90.6	Prä	961Z
Z90.7	Prä	961Z
Z90.8	Prä	961Z
Z91.0	Prä	961Z
Z91.1	Prä	961Z
Z91.8	Prä	961Z
Z91.70	13	N62A N62B
Z91.71	13	N62A N62B
Z91.72	13	N62A N62B
Z91.73	13	N62A N62B
Z91.74	13	N62A N62B
Z92.1	Prä	961Z
Z92.2	Prä	961Z
Z92.3	Prä	961Z
Z92.4	Prä	961Z
Z92.6	Prä	961Z
Z92.8	Prä	961Z
Z92.9	Prä	961Z
Z93.0	Prä	961Z
Z93.1	Prä	961Z
Z93.2	Prä	961Z
Z93.3	Prä	961Z
Z93.4	Prä	961Z
Z93.5	Prä	961Z
Z93.6	Prä	961Z
Z93.9	Prä	961Z

ICD	MDC	DRG
Z93.80	Prä	961Z
Z93.88	Prä	961Z
Z94.0	03	D67A
	04	E77A E77B
	05	F61A
	06	G16A G16B G18A
		G38A G38B G38C
		G46C
	10	K62A
	11	L68A L68B L68C
	18B	T01B T60A T60B
		T60C T61A T63A
	23	Z64A Z64B Z86A
Z94.1	Prä	A11C
	03	D67A
	04	E77A E77B
	05	F61A F75A F75B
		F75C F75D
	06	G16A G16B G18A
		G38A G38B G38C
		G46C
	10	K62A
	18B	T01B T60A T60B
		T60C T61A T63A
	23	Z64A Z64B Z86A
Z94.2	Prä	A11C
	03	D67A
	04	E65A E75A E75B
		E75C E77A E77B
	05	F61A
	06	G16A G16B G18A
		G38A G38B G38C
		G46C
	10	K62A
	18B	T01B T60A T60B
		T60C T61A T63A
	23	Z64A Z64B Z86A
Z94.3	Prä	A11C
	03	D67A
	04	E65A E75A E75B
		E75C E77A E77B
	05	F61A
	06	G16A G16B G18A
		G38A G38B G38C
		G46C
	10	K62A
	18B	T01B T60A T60B
		T60C T61A T63A
	23	Z64A Z64B Z86A
Z94.4	Prä	A11C
	03	D67A
	04	E77A E77B
	05	F61A
	06	G16A G16B G18A
		G38A G38B G38C
		G46C
	07	H63A H63B H63C
		H63D
	10	K62A
	18B	T01B T60A T60B
		T60C T61A T63A
	23	Z64A Z64B Z86A
Z94.5	09	J67Z

ICD	MDC	DRG
Z94.6	08	I76A I76B
Z94.7	02	C63A C63B C63C
Z94.9	23	Z65A Z65B
Z94.80	16	Q61A
	17	R62A R62B
Z94.81	Prä	A11C
	03	D67A
	04	E77A E77B
	05	F61A
	06	G16A G16B G18A
		G38A G38B G38C
		G46C
	10	K62A
	16	Q61A
	17	R62A R62B
	18B	T01B T60A T60B
		T60C T61A T63A
	23	Z64A Z64B Z86A
Z94.88	17	R62A R62B
Z95.0	Prä	961Z
Z95.1	Prä	961Z
Z95.2	Prä	961Z
Z95.3	Prä	961Z
Z95.4	Prä	961Z
Z95.5	Prä	961Z
Z95.9	Prä	961Z
Z95.80	Prä	961Z
Z95.81	Prä	961Z
Z95.88	Prä	961Z
Z96.0	Prä	961Z
Z96.1	Prä	961Z
Z96.2	Prä	961Z
Z96.3	Prä	961Z
Z96.4	Prä	961Z
Z96.5	Prä	961Z
Z96.7	Prä	961Z
Z96.9	Prä	961Z
Z96.60	Prä	961Z
Z96.61	Prä	961Z
Z96.62	Prä	961Z
Z96.63	Prä	961Z
Z96.64	Prä	961Z
Z96.65	Prä	961Z
Z96.66	Prä	961Z
Z96.67	Prä	961Z
Z96.68	Prä	961Z
Z96.80	Prä	961Z
Z96.81	Prä	961Z
Z96.88	Prä	961Z
Z97.1	Prä	961Z
Z97.8	Prä	961Z
Z98.0	Prä	961Z
Z98.1	Prä	961Z
Z98.2	Prä	961Z
Z98.8	Prä	961Z
Z99.0	Prä	961Z
Z99.1	Prä	961Z
Z99.2	Prä	961Z
Z99.3	Prä	961Z
Z99.4	Prä	961Z
Z99.8	Prä	961Z
Z99.9	Prä	961Z

Anhang B

B Prozedurenkode-/MDC-/DRG-Index

Dieser Anhang enthält eine Liste der gruppierungsrelevanten Prozedurenkodes sowie nähere Informationen zu den MDCs und DRGs, in denen diese vorkommen. Die Kodes entstammen grundsätzlich der schweizerischen Klassifikation CHOP Version 2023, wie in Kapitel 6 Besonderheiten der SwissDRG-Version 15.0 Katalogversion (2023/2026) in Band 1 dargelegt ist. NonOR-Prozeduren werden durch das Zeichen ‡ am Ende des Kodes gekennzeichnet. Ein Doppelpfeil ↔ hinter dem Kode zeigt die Möglichkeit der Angabe eines Zusatzkennzeichens für die Seitenlokalisation an.

Die DRG-Zuordnung von Prozedurenkodes aufgrund der Abfrage auf sämtliche OR-Prozeduren (sofern sie nicht zusätzlich an anderer Stelle Gruppierungsrelevanz haben) wird im Anhang nicht bei jeder einzelnen OR-Prozedur aufgelistet. Stattdessen findet sich im Anschluss an die Liste der gruppierungsrelevanten Prozedurenkodes der CHOP Version 2023 eine Aufstellung aller DRGs, die eine Abfrage auf sämtliche OR-Prozeduren in ihrer Definition enthalten. Eine Übersicht über die in diesem Anhang verwendeten Abkürzungen für Funktionen findet sich in der Funktionsübersicht am Ende von Anhang B. In den folgenden Beispielen wird analog zu den Einträgen in der Liste der gruppierungsrelevanten Prozedurenkodes der CHOP Version 2023 nicht auf DRG-Zuordnungen aufgrund von Abfragen auf sämtliche OR-Prozeduren eingegangen.

Ein Prozedurenkode kann mehreren DRGs in mehreren verschiedenen MDCs zugeordnet sein. So ergibt sich zum Beispiel für den Prozedurenkode 26.29.00 *Sonstige Exzision einer Läsion an einer Speicheldrüse, n.n.bez.* folgende Zuordnung:

Kode	MDC	DRG
26.29.00	03	D06A, D06B, D06C
	04	E36A, E36B
	06	G12A, G16A, G38A, G38B
		BORP, MBOR, VAC, VBOR

Daraus geht hervor, dass der Kode 26.29.00 eine der OR-Prozeduren ist, welche die Basis-DRG D06 sowie die Funktionen Bestimmte OR-Prozeduren [BORP], Mehrzeitige_bestimmte OR- Prozeduren [MBOR], Vierzeitige bestimmte OR-Prozeduren [VBOR] und Vakuumbehandlung [VAC] definieren. Weist ein Datensatz eine Hauptdiagnose aus MDC 03 auf (z.B. K11.8 *Sonstige Krankheiten der Speicheldrüsen*) und ist der Kode 26.29.00 die einzige Prozedur, wird der Datensatz der Basis-DRG D06 zugeordnet. Enthält der Datensatz jedoch eine Hauptdiagnose aus MDC 01 (z.B. S44.3 *Verletzung des N. axillaris*) und ist 26.29.00 wiederum der einzige Eingriff, so wird der Datensatz der DRG 902Z *Nicht ausgedehnte OR-Prozedur ohne Bezug zur Hauptdiagnose* zugeordnet, da diese OR-Prozedur nicht in den DRGs der MDC 01 aufgeführt ist.

Prozedurenkodes für NonOR-Prozeduren wirken sich auf die Gruppierung von Datensätzen anders aus und werden in diesem Anhang anders aufgelistet. So hat z.B. der Prozedurenkode 86.03 *Inzision an Sinus pilonidalis oder Pilonidalzyste* folgende Zuordnung:

Kode	MDC	DRG
86.03	01	B60A
	09	J09A, J09B

Dies bedeutet, dass der Kode 86.03 eine NonOR-Prozedur ist und er in der Definition der DRGs J09A und J09B verwendet wird. Enthält der Datensatz eine Hauptdiagnose aus MDC 09 (z.B. L05.0 *Pilonidalzyste mit Abszess*) und ist der Kode 86.03 die einzige Prozedur, so wird der Datensatz der Basis-DRG J09 zugeordnet. Enthält der Datensatz eine Hauptdiagnose aus MDC 03 (z.B. H81.1 *Benigner paroxysmaler Schwindel*) und ist der Kode 86.03 auch hier wieder die einzige Prozedur, wird der Datensatz einer medizinischen DRG (hier der Basis-DRG D61 Gleichgewichtsstörungen (Schwindel)) zugeordnet.

Ein Prozedurenkode kann in ein und derselben MDC mehreren DRGs in verschiedenen Basis-DRGs zugeordnet sein. Der Prozedurenkode 52.09.00 *Sonstige Pankreatotomie, n.n.bez.* ist beispielsweise den folgenden MDCs und DRGs zugeordnet:

Kode	MDC	DRG
52.09.00	04	E36A, E36B
	06	G12A, G16A, G33Z, G38A, G38B, G38C
	07	H01A, H01B, H01C, H09A, H09B, H09C, H33Z
		BORP, MBOR, VAC, VAC I, VAC II, VBOR

Dies bedeutet, dass der Kode 52.09.00 zu den OR-Prozeduren zählt, die jede der oben angeführten DRGs und sechs Funktionen definieren. So ist beispielsweise in MDC 07 der Kode 52.09.00 in der Definition von drei Basis-DRGs enthalten. Aus der Logik dieser Basis-DRGs (siehe Abschnitt zu MDC 07 in Band 2) geht hervor, dass die Zuordnung zur Basis-DRG durch die Kombination von Diagnose und Prozedur bzw. zwei bestimmte Prozeduren des Datensatzes erfolgt. Ist die Hauptdiagnose in einem Datensatz der Kode C25.8 *Bösartige Neubildung: Pankreas, mehrere Teilbereiche überlappend* aus MDC 07 und ist der Kode 52.09.00 die einzige OR-Prozedur, so wird der Datensatz der DRG H09B zugeordnet, sofern keine äußerst schweren CC vorliegen. Ist die Hauptdiagnose in einem Datensatz keine bösartige Neubildung, sondern der Kode S36.20 *Verletzung des Pankreas: Teil nicht näher bezeichnet* und ist der Kode 52.09.00 die einzige OR-Prozedur, so wird der Datensatz der DRG H09C zugeordnet. Ist bei gleicher Hauptdiagnose zusätzlich zum Kode 52.09.00 die weitere OR-Prozedur 92.26.99 *Teleradiotherapie mit anderen Partikelstrahlen, sonstige* enthalten, so wird der Datensatz der DRG H01C zugeordnet.

In einigen Fällen kann ein Prozedurenkode sowohl der Fehler- und sonstigen DRG 962Z *Unzulässige Kodierung einer Sectio caesarea* als auch anderen DRGs zugeordnet sein. Für diese Fälle sind Einzelheiten zur Logik, die zur Zuweisung einer Fehler-DRG führen, im entsprechenden MDC-Abschnitt in Band 1 bis 4 ersichtlich. Dem Prozedurenkode 74.0X.00 *Klassische Sectio caesarea, n.n.bez.* sind beispielsweise unter anderem folgende DRGs zugeordnet:

Kode	MDC	DRG
74.0X.00	04	E36A, E36B
	06	G12A, G16A, G38A, G38B
	14	O01A, O01B, O01C, O01D, O01E, O01F, O01G
		BORP, MBOR, VAC, VAC I, VAC II, VBOR

Hieraus geht hervor, dass der Kode 74.0X.00 zu den OR-Prozeduren gehört, die die Basis-DRG O01, sowie den Funktionen Bestimmte OR-Prozeduren [BORP], Mehrzeitige_bestimmte OR- Prozeduren [MBOR], Vakuumbehandlung [VAC], Komplexe Vakuumbehandlung [VAC I], Hochkomplexe Vakuumbehandlung [VAC II] und Vierzeitige bestimmte OR-Prozeduren [VBOR] definieren. Enthält ein Datensatz die Hauptdiagnose O64.5 *Geburtshindernis durch kombinierte Einstellungsanomalien* und die Prozedur 74.0X.00, so wird er der Basis-DRG O01 zugeordnet.

In diesem Anhang sind nicht alle Prozedurenkodes der CHOP Version 2023 aufgelistet – nicht für DRG-Zuordnungen verwendete Kodes wurden ausgeschlossen. Ein Beispiel bildet ein Datensatz mit der Hauptdiagnose D41.3 *Neubildung unsicheren oder unbekannten Verhaltens: Urethra* und der Prozedur 57.39 Diagnostische Massnahmen an der Harnblase, sonstige. Der Prozedurenkode 57.39 ist nicht im Anhang B aufgelistet, daher würde der Datensatz keiner operativen oder „anderen" DRG dieser MDC, sondern einer medizinischen DRG (hier – sofern es sich um Erwachsene handelt – der DRG L62B) zugeordnet.

Für Datensätze mit mehreren Prozeduren kann dieser Anhang genutzt werden, um Informationen zu den möglichen operativen und „anderen" DRGs für jeden Prozedurenkode zu erhalten. Enthält der Datensatz OR-Prozeduren, von denen jedoch keine einer DRG der entsprechenden MDC zugeordnet ist und werden die Fehler- und sonstigen DRGs vor den DRGs der „anderen" DRGs abgefragt, wird er in eine der Fehler- und sonstigen DRGs 901A-901D oder 902Z eingeordnet. Sofern mehrere Prozedurenkodes in den operativen oder „anderen" DRGs dieser MDC aufgeführt sind, ist die Hierarchie innerhalb der operativen oder „anderen" Partition der MDC für die DRG-Zuordnung entscheidend.

Ein Beispiel hierfür ist ein Datensatz mit der Hauptdiagnose Q30.8 *Sonstige angeborene Fehlbildungen der Nase* und den Prozeduren 21.88.99 *Sonstige Septumplastik, sonstige* und 22.71 *Verschluss einer Fistel eines Sinus paranasales*. Die Liste enthält dazu folgende Zuordnungen:

Kode	MDC	DRG
21.88.99	02	C13A, C14Z
	03	D35Z, D38A, D38B
	04	E02A, E02B, E02C, E07Z
	08	I28A, I28B
	09	J02A, J02B, J03A, J03B, J04Z, J10A, J10B
	19	U01A, U01B
	21B	X06A, X06B, X06C

Kode	MDC	DRG
22.71	03	D06A, D06B
	04	E36A, E36B
	06	G12A, G16A, G38A, G38B
	21B	X06A, X06B, X06C
		BORP, MBOR, VAC, VAC I, VAC II, VBOR

Die Hauptdiagnose bestimmt, dass MDC 03 die zutreffende MDC ist. Die Liste zeigt, dass der Datensatz den Basis-DRG D35, D38, D06 zugeordnet werden könnte. Um den Datensatz genau einer dieser Basis-DRGs zuordnen zu können, sind das Ablaufdiagramm zu MDC 03 und die entsprechenden Basis-DRG-Definitionen erforderlich. Damit kann festgestellt werden, welche der Prozeduren in der Hierarchie der operativen DRGs dieser MDC an oberster Stelle steht. Da die Basis-DRG D06 in der operativen Hierarchie der MDC 03 vor der Basis-DRG D38 eingeordnet ist, würde dieser Datensatz der Basis-DRG D06 zugeordnet werden. Der Basis-DRG D35 kann der Fall nicht zugeordnet werden, da diese in ihrer Definition das Vorhandensein einer bösartigen Neubildung fordert.

Weist der Datensatz jedoch eine Hauptdiagnose Q30.8 *Sonstige angeborene Fehlbildungen der Nase* und die Prozeduren 38.59.10 *Ligatur, Exzision und Stripping von Varizen und Vv. perforantes der unteren Extremität (als selbstständiger Eingriff)* und 23.02 *Zahnextraktion mit Zange, 1 oder mehrere Zähne eines Quadranten*, würde daraus eine andere DRG-Zuordnung resultieren. Die Liste enthält dazu folgende MDCs und DRGs:

Kode	MDC	DRG
23.02	01	B60A
	03	D40Z

Kode	MDC	DRG
38.59.10	05	F39A, F39B
	08	I08B, I28A, I28B, I28C

Die Hauptdiagnose bestimmt, dass MDC 03 die zutreffende MDC ist. Die Liste enthält für die NonOR-Prozedur 23.02 eine DRG aus MDC 03. Die OR-Prozedur 38.59.10 ist jedoch nicht in MDC 03 aufgelistet, so dass der Datensatz einer Fehler- oder sonstigen DRG zugeordnet wird. Würde der Datensatz auch die OR-Prozedur 22.71 enthalten, so würde er der Basis-DRG D06 zugewiesen werden, da die Basis-DRG D06 in der Hierarchie der operativen und „anderen“ DRGs der MDC 03 an höherer Stelle steht und vor der Basis-DRG D40 eingeordnet ist.

PROC

CHOP	MDC	DRG
00.10‡↔	Prä	A93A A97A A97B A97C A97D
	01	B60A
	17	R50A R60A R60B
00.11‡↔	01	B60A
	15	P65B P66B P66C P67A P67B P67C
00.17‡↔	01	B60A
	15	P65B P66B P66C P67A P67B P67C
00.21‡↔	01	B60A
	05	F49A F49C
00.22‡↔	01	B60A
	05	F49A F49C
00.23‡↔	01	B60A
	05	F49A F49C
00.25‡↔	01	B60A
	05	F49A F49C
00.28‡↔	01	B60A
	05	F49A F49C
00.41‡↔	01	B60A
	05	F59F
00.42‡↔	01	B60A
	05	F59F
00.43‡↔	01	B60A
	05	F59F
00.44‡↔	01	B60A
	05	F59F
00.4B.11↔	03	D12A
	04	E02A E02B
	05	F21A F21B F21C F59A
	06	G12A G12B
	07	H06Z
	08	I28A I28B
	09	J11A
	10	K09A K09B
	11	L09A L09B
	12	M06Z M37Z
	13	N11A N11B
	14	O02A O02B
	21B	X06A X06B X06C
00.4B.12↔	03	D12A
	04	E02A E02B
	05	F21A F21B F21C F59A
	06	G12A G12B
	07	H06Z
	08	I28A I28B
	09	J11A
	10	K09A K09B
	11	L09A L09B
	12	M06Z M37Z
	13	N11A N11B
	14	O02A O02B
	21B	X06A X06B X06C
00.4B.13↔	03	D12A
	04	E02A E02B
	05	F19Z F21A F21B F21C F59A
	06	G12A G12B
	07	H06Z
	08	I28A I28B
	09	J11A
	10	K09A K09B
	11	L09A L09B
	12	M06Z M37Z
	13	N11A N11B
	14	O02A O02B
	21B	X06A X06B X06C
00.4B.14↔	03	D12A
	04	E02A E02B
	05	F21A F21B F21C F59A
	06	G12A G12B
	07	H06Z
	08	I28A I28B
	09	J11A
	10	K09A K09B
	11	L09A L09B
	12	M06Z M37Z
	13	N11A N11B
	14	O02A O02B
	21B	X06A X06B X06C
00.4B.15↔	03	D12A
	04	E02A E02B
	05	F21A F21B F21C F59A
	06	G12A G12B
	07	H06Z
	08	I28A I28B
	09	J11A
	10	K09A K09B
	11	L09A L09B
	12	M06Z M37Z
	13	N11A N11B
	14	O02A O02B
	21B	X06A X06B X06C
00.4B.16↔	03	D12A
	04	E02A E02B
	05	F21A F21B F21C F59A
	06	G12A G12B
	07	H06Z
	08	I28A I28B
	09	J11A
	10	K09A K09B
	11	L09A L09B
	12	M06Z M37Z
	13	N11A N11B
	14	O02A O02B
	21B	X06A X06B X06C
00.4B.17↔	03	D12A
	04	E02A E02B
	05	F21A F21B F21C F59A
	06	G12A G12B
	07	H06Z
	08	I28A I28B
	09	J11A
	10	K09A K09B
	11	L09A L09B
	12	M06Z M37Z
	13	N11A N11B
	14	O02A O02B
	21B	X06A X06B X06C
00.4B.18↔	03	D12A
	04	E02A E02B
	05	F21A F21B F21C F59A
	06	G12A G12B
	07	H06Z
	08	I28A I28B
	09	J11A
	10	K09A K09B
	11	L09A L09B
	12	M06Z M37Z
	13	N11A N11B
	14	O02A O02B
	21B	X06A X06B X06C
00.4B.19↔	03	D12A
	04	E02A E02B
	05	F21A F21B F21C F59A
	06	G12A G12B
	07	H06Z
	08	I28A I28B
	09	J11A
	10	K09A K09B
	11	L09A L09B
	12	M06Z M37Z
	13	N11A N11B
	14	O02A O02B
	21B	X06A X06B X06C
00.4B.1A↔	03	D12A
	04	E02A E02B
	05	F21A F21B F21C F59A
	06	G12A G12B
	07	H06Z
	08	I28A I28B
	09	J11A
	10	K09A K09B
	11	L09A L09B
	12	M06Z M37Z
	13	N11A N11B
	14	O02A O02B
	21B	X06A X06B X06C
00.4B.21↔	03	D12A
	04	E02A E02B
	05	F21A F21B F21C F59A
	06	G12A G12B
	07	H06Z
	08	I28A I28B
	09	J11A
	10	K09A K09B
	11	L09A L09B
	12	M06Z M37Z
	13	N11A N11B
	14	O02A O02B
	21B	X06A X06B X06C
00.4B.22↔	03	D12A
	04	E02A E02B
	05	F21A F21B F21C F59A
	06	G12A G12B
	07	H06Z
	08	I28A I28B
	09	J11A
	10	K09A K09B
	11	L09A L09B
	12	M06Z M37Z
	13	N11A N11B
	14	O02A O02B
	21B	X06A X06B X06C
00.4B.23↔	03	D12A
	04	E02A E02B
	05	F21A F21B F21C F59A
	06	G12A G12B
	07	H06Z
	08	I28A I28B
	09	J11A
	10	K09A K09B
	11	L09A L09B
	12	M06Z M37Z

CHOP	MDC	DRG
	13	N11A N11B
	14	O02A O02B
	21B	X06A X06B X06C
00.4B.24↔	03	D12A
	04	E02A E02B
	05	F21A F21B F21C F59A
	06	G12A G12B
	07	H06Z
	08	I28A I28B
	09	J11A
	10	K09A K09B
	11	L09A L09B
	12	M06Z M37Z
	13	N11A N11B
	14	O02A O02B
	21B	X06A X06B X06C
00.4B.25↔	03	D12A
	04	E02A E02B
	05	F21A F21B F21C F59A
	06	G12A G12B
	07	H06Z
	08	I28A I28B
	09	J11A
	10	K09A K09B
	11	L09A L09B
	12	M06Z M37Z
	13	N11A N11B
	14	O02A O02B
	21B	X06A X06B X06C
00.4B.26↔	03	D12A
	04	E02A E02B
	05	F21A F21B F21C F59A
	06	G12A G12B
	07	H06Z
	08	I28A I28B
	09	J11A
	10	K09A K09B
	11	L09A L09B
	12	M06Z M37Z
	13	N11A N11B
	14	O02A O02B
	21B	X06A X06B X06C
00.4B.27↔	03	D12A
	04	E02A E02B
	05	F21A F21B F21C F59A
	06	G12A G12B
	07	H06Z
	08	I28A I28B
	09	J11A
	10	K09A K09B
	11	L09A L09B
	12	M06Z M37Z
	13	N11A N11B
	14	O02A O02B
	21B	X06A X06B X06C
00.4B.28↔	03	D12A
	04	E02A E02B
	05	F21A F21B F21C F59A
	06	G12A G12B
	07	H06Z
	08	I28A I28B
	09	J11A
	10	K09A K09B
	11	L09A L09B
	12	M06Z M37Z

CHOP	MDC	DRG
	13	N11A N11B
	14	O02A O02B
	21B	X06A X06B X06C
00.4B.29↔	03	D12A
	04	E02A E02B
	05	F21A F21B F21C F59A
	06	G12A G12B
	07	H06Z
	08	I28A I28B
	09	J11A
	10	K09A K09B
	11	L09A L09B
	12	M06Z M37Z
	13	N11A N11B
	14	O02A O02B
	21B	X06A X06B X06C
00.4B.31↔	03	D12A
	04	E02A E02B
	05	F21A F21B F21C F59A
	06	G12A G12B
	07	H06Z
	08	I28A I28B
	09	J11A
	10	K09A K09B
	11	L09A L09B
	12	M06Z M37Z
	13	N11A N11B
	14	O02A O02B
	21B	X06A X06B X06C
00.4B.32↔	03	D12A
	04	E02A E02B
	05	F21A F21B F21C F59A
	06	G12A G12B
	07	H06Z
	08	I28A I28B
	09	J11A
	10	K09A K09B
	11	L09A L09B
	12	M06Z M37Z
	13	N11A N11B
	14	O02A O02B
	21B	X06A X06B X06C
00.4B.33↔	03	D12A
	04	E02A E02B
	05	F21A F21B F21C F59A
	06	G12A G12B
	07	H06Z
	08	I28A I28B
	09	J11A
	10	K09A K09B
	11	L09A L09B
	12	M06Z M37Z
	13	N11A N11B
	14	O02A O02B
	21B	X06A X06B X06C
00.4B.34↔	03	D12A
	04	E02A E02B
	05	F21A F21B F21C F59A
	06	G12A G12B
	07	H06Z
	08	I28A I28B
	09	J11A
	10	K09A K09B
	11	L09A L09B
	12	M06Z M37Z

CHOP	MDC	DRG
	13	N11A N11B
	14	O02A O02B
	21B	X06A X06B X06C
00.4B.39↔	03	D12A
	04	E02A E02B
	05	F21A F21B F21C F59A
	06	G12A G12B
	07	H06Z
	08	I28A I28B
	09	J11A
	10	K09A K09B
	11	L09A L09B
	12	M06Z M37Z
	13	N11A N11B
	14	O02A O02B
	21B	X06A X06B X06C
00.4B.41↔	03	D12A
	04	E02A E02B
	05	F21A F21B F21C F59A
	06	G12A G12B
	07	H06Z
	08	I28A I28B
	09	J11A
	10	K09A K09B
	11	L09A L09B
	12	M06Z M37Z
	13	N11A N11B
	14	O02A O02B
	21B	X06A X06B X06C
00.4B.42↔	03	D12A
	04	E02A E02B
	05	F21A F21B F21C F59A
	06	G12A G12B
	07	H06Z
	08	I28A I28B
	09	J11A
	10	K09A K09B
	11	L09A L09B
	12	M06Z M37Z
	13	N11A N11B
	14	O02A O02B
	21B	X06A X06B X06C
00.4B.43↔	03	D12A
	04	E02A E02B
	05	F21A F21B F21C F59A
	06	G12A G12B
	07	H06Z
	08	I28A I28B
	09	J11A
	10	K09A K09B
	11	L09A L09B
	12	M06Z M37Z
	13	N11A N11B
	14	O02A O02B
	21B	X06A X06B X06C
00.4B.44↔	03	D12A
	04	E02A E02B
	05	F21A F21B F21C F59A
	06	G12A G12B
	07	H06Z
	08	I28A I28B
	09	J11A
	10	K09A K09B
	11	L09A L09B
	12	M06Z M37Z

PROC

CHOP	MDC	DRG
	13	N11A N11B
	14	O02A O02B
	21B	X06A X06B X06C
00.4B.45↔	03	D12A
	04	E02A E02B
	05	F21A F21B F21C F59A
	06	G12A G12B
	07	H06Z
	08	I28A I28B
	09	J11A
	10	K09A K09B
	11	L09A L09B
	12	M06Z M37Z
	13	N11A N11B
	14	O02A O02B
	21B	X06A X06B X06C
00.4B.46↔	03	D12A
	04	E02A E02B
	05	F21A F21B F21C F59A
	06	G12A G12B
	07	H06Z
	08	I28A I28B
	09	J11A
	10	K09A K09B
	11	L09A L09B
	12	M06Z M37Z
	13	N11A N11B
	14	O02A O02B
	21B	X06A X06B X06C
00.4B.49↔	03	D12A
	04	E02A E02B
	05	F21A F21B F21C F59A
	06	G12A G12B
	07	H06Z
	08	I28A I28B
	09	J11A
	10	K09A K09B
	11	L09A L09B
	12	M06Z M37Z
	13	N11A N11B
	14	O02A O02B
	21B	X06A X06B X06C
00.4C.11‡↔	01	B60A
	05	F24C
00.4C.12‡↔	01	B60A
	05	F04Z F13A F13B F24B F24C F59E
00.4C.13‡↔	01	B60A
	05	F04Z F13A F13B F24A F24B F59E
00.4C.14‡↔	01	B60A
	05	F04Z F13A F13B F24A F24B F59E
00.4F.11‡↔	01	B60A
	04	E02A
	05	F24A F24B F59A F59D
00.4F.12‡↔	01	B60A
	04	E02A
	05	F24A F24B F59A F59D
00.4F.13‡↔	01	B60A
	04	E02A
	05	F24A F24B F59A F59D
00.4H.13‡↔	01	B60A
	04	E02A
	05	F24A F24B F59A F59D
00.4H.14‡↔	01	B60A
	04	E02A
	05	F24A F24B F59A F59D
00.4H.15‡↔	01	B60A
	04	E02A
	05	F24A F24B F59A F59D
00.4H.16‡↔	01	B60A
	04	E02A
	05	F24A F24B F59A F59D
00.4H.23‡↔	01	B20A B20B B60A
00.4H.24‡↔	01	B20A B20B B60A
00.4H.25‡↔	01	B20A B20B B60A
00.4H.26‡↔	01	B20A B20B B60A
00.4H.33‡↔	01	B60A
	05	F24A F24B F59A F59D
00.4H.34‡↔	01	B60A
	05	F24A F24B F59A F59D
00.4H.35‡↔	01	B60A
	05	F24A F24B F59A F59D
00.4H.36‡↔	01	B60A
	05	F24A F24B F59A F59D
00.4H.43‡↔	01	B20A B20B B60A
00.4H.44‡↔	01	B20A B20B B60A
00.4H.45‡↔	01	B20A B20B B60A
00.4H.46‡↔	01	B20A B20B B60A
00.4H.53‡↔	01	B20A B20B B60A
00.4H.54‡↔	01	B20A B20B B60A
00.4H.55‡↔	01	B20A B20B B60A
00.4H.56‡↔	01	B20A B20B B60A
00.66.00↔	05	F01A F01C F04Z F06A F06B F06C F12A F24A F24B F24C F24D F50A F50B
00.66.09↔	05	F01A F01C F04Z F06A F06B F06C F12A F24A F24B F24C F24D F50A F50B
00.66.10↔	05	F01A F01C F04Z F06A F06B F06C F12A F24A F24B F24C F24D F50A F50B
00.66.20↔	05	F01A F01C F04Z F06A F06B F06C F12A F24A F24B F24C F24D F50A F50B
00.66.21↔	05	F01A F01C F04Z F06A F06B F06C F12A F24A F24B F24C F24D F50A F50B
00.66.22↔	05	F01A F01C F04Z F06A F06B F06C F12A F24A F24B F24C F24D F50A F50B
00.66.29↔	05	F01A F01C F04Z F06A F06B F06C F12A F24A F24B F24C F24D F50A F50B
00.66.30↔	05	F01A F01C F04Z F06A F06B F06C F12A F24A F24B F24C F50A F50B
00.66.31↔	05	F01A F01C F04Z F06A F06B F06C F12A F24A F24B F24C F24D F50A F50B
00.66.32↔	05	F01A F01C F04Z F06A F06B F06C F12A F24A F24B F24C F24D F50A F50B
00.66.33↔	05	F01A F01C F04Z F06A F06B F06C F12A F24A F24B F24C F24D F50A F50B
00.66.36↔	05	F01A F01C F04Z F06A F06B F06C F12A F24A F24B F24C F24D F50A F50B
00.66.37↔	05	F01A F01C F04Z F06A F06B F06C F12A F24A F24B F24C F24D F50A F50B
00.66.38↔	05	F01A F01C F12A F24A F24B F24C F24D F50A F50B
00.66.3A↔	05	F01A F01C F04Z F06A F06B F06C F12A F24A F24B F24C F50A F50B
00.66.40↔	05	F01A F01C F04Z F06A F06B F06C F12A F24A F24B F24C F24D F50A F50B
00.66.41↔	05	F01A F01C F04Z F06A F06B F06C F12A F24A F24B F24C F24D F50A F50B
00.66.42↔	05	F01A F01C F04Z F06A F06B F06C F12A F24A F24B F24C F24D F50A F50B
00.66.43↔	05	F01A F01C F04Z F06A F06B F06C F12A F24A F24B F24C F24D F50A F50B
00.66.44↔	05	F01A F01C F04Z F06A F06B F06C F12A F24A F24B F24C F24D F50A F50B
00.66.49↔	05	F01A F01C F04Z F06A F06B F06C F12A F24A F24B F24C F24D F50A F50B
00.94.31‡↔	01	B03A B20A B20B

CHOP	MDC	DRG
		B60A
	08	I02A I02B I02C
		I06B I09D
00.94.32‡↔	01	B03A B20A B20B
		B60A
	08	I02A I02B I02C
		I06B I09D
00.94.33‡↔	01	B03A B20A B20B
		B60A
	08	I02A I02B I02C
		I06B I09D
00.99.30‡↔	01	B60A
	11	L20C
00.99.80‡↔	01	B60A
	05	F30Z F59C
00.99.A7‡↔	01	B60A
	11	L20C
00.9A.2A‡↔	01	B60A
	09	J06A J23A
00.9A.61‡↔	Prä	A97A A97B B61B
		B61C B61D
	01	B60A
	03	D02A D24A D25A
	08	I15A I20B I21A
		I31A I32E I46B
	17	R01A
	19	U01A
00.9A.62‡↔	Prä	A97A A97B B61B
		B61C B61D
	01	B60A
	03	D02A D24A D25A
	08	I15A I20B I21A
		I31A I32E I46B
	17	R01A
	19	U01A
00.9A.63‡↔	Prä	A97A A97B B61B
		B61C B61D
	01	B60A
	03	D02A D24A D25A
	08	I15A I20B I21A
		I31A I32E I46B
	17	R01A
	19	U01A
00.9A.64‡↔	Prä	A97A A97B B61B
		B61C B61D
	01	B60A
	03	D02A D24A D25A
	08	I15A I20B I21A
		I31A I32E I46B
	17	R01A
	19	U01A
00.9C.11‡↔	Prä	A46C A46D
	01	B60A
	08	I32C
00.9C.12‡↔	Prä	A46C A46D
	01	B60A
	08	I32C
00.9C.13‡↔	Prä	A46C A46D
	01	B60A
	08	I32C
00.9C.14‡↔	Prä	A46C A46D
	01	B60A
	08	I32C
00.9C.21‡↔	01	B60A
	08	I20A I20B I20C
00.9C.22‡↔	01	B60A
	08	I20A I20B I20C
00.9C.23‡↔	01	B60A
	08	I20A I20B I20C
00.9C.24‡↔	01	B60A

CHOP	MDC	DRG
	08	I20A I20B I20C
00.9E‡↔	Prä	A46C A46D
	01	B60A
01.10‡↔		KPP
	01	B60A
01.11.10↔	01	B09A B09B B09C
		B09D
01.11.99↔	01	B09A B09B B09C
		B09D
01.12.00↔		BORP KORP MBOR
		MKOR VAC VAC I
		VAC II VBOR VKOR
	01	B01A B02A B02B
		B09A B09B B09C
		B09D B20A B20B
		B20C
	03	D25A D25B
	04	E36A E36B
	06	G12A G16A G38A
		G38B
	08	I15A I15B
	09	J02A J02B J08Z
	21A	W01A W01B W01C
	21B	X06A X06B X06C
01.12.10↔		BORP KORP MBOR
		MKOR VAC VAC I
		VAC II VBOR VKOR
	01	B01A B02A B02B
		B09A B09B B09C
		B09D B20A B20B
		B20C
	03	D25A D25B
	04	E36A E36B
	06	G12A G16A G38A
		G38B
	08	I15A I15B
	09	J02A J02B J08Z
	21A	W01A W01B W01C
	21B	X06A X06B X06C
01.12.99↔		BORP KORP MBOR
		MKOR VAC VAC I
		VAC II VBOR VKOR
	01	B01A B02A B02B
		B09A B09B B09C
		B09D B20A B20B
		B20C
	03	D25A D25B
	04	E36A E36B
	06	G12A G16A G38A
		G38B
	08	I15A I15B
	09	J02A J02B J08Z
	21A	W01A W01B W01C
	21B	X06A X06B X06C
01.13.10↔		BORP KORP MBOR
		MKOR VAC VBOR
		VKOR
	01	B09A B09B B09C
		B09D
	04	E36A E36B
	06	G12A G16A G38A
		G38B
01.13.99↔		BORP KORP MBOR
		MKOR VAC VBOR
		VKOR
	01	B09A B09B B09C
		B09D
	04	E36A E36B
	06	G12A G16A G38A
		G38B

CHOP	MDC	DRG
01.14.00↔		BORP KORP MBOR
		MKOR VAC VAC I
		VAC II VBOR VKOR
	01	B01A B02A B02B
		B09A B09B B09C
		B09D B20A B20B
		B20C
	02	C14Z
	03	D25A D25B
	04	E36A E36B
	06	G12A G16A G38A
		G38B
	08	I15A I15B I28A
		I28B
	09	J02A J02B J08Z
	10	K09A K09B
	21A	W01A W01B W01C
	21B	X06A X06B X06C
01.14.10↔		BORP KORP MBOR
		MKOR VAC VAC I
		VAC II VBOR VKOR
	01	B01A B02A B02B
		B09A B09B B09C
		B09D B20A B20B
		B20C
	02	C14Z
	03	D25A D25B
	04	E36A E36B
	06	G12A G16A G38A
		G38B
	08	I15A I15B I28A
		I28B
	09	J02A J02B J08Z
	10	K09A K09B
	21A	W01A W01B W01C
	21B	X06A X06B X06C
01.14.99↔		BORP KORP MBOR
		MKOR VAC VAC I
		VAC II VBOR VKOR
	01	B01A B02A B02B
		B09A B09B B09C
		B09D B20A B20B
		B20C
	02	C14Z
	03	D25A D25B
	04	E36A E36B
	06	G12A G16A G38A
		G38B
	08	I15A I15B I28A
		I28B
	09	J02A J02B J08Z
	10	K09A K09B
	21A	W01A W01B W01C
	21B	X06A X06B X06C
01.15↔		BORP MBOR VAC
		VBOR
	01	B01A B02A B02B
		B09A B09B B09C
		B09D B20A B20B
		B20C
	03	D25A D25B
	04	E02A E02B E02C
		E36A E36B
	06	G12A G16A G38A
		G38B
	08	I15A I15B I18A
		I18B I18C
	09	J02A J02B J03A
		J03B J04Z J08Z
		J11A J11B

PROC

PROC

CHOP	MDC	DRG
	10	K09A K09B
	11	L09A L09B
	12	M06Z M09A M09B M37Z
	21A	W01A W01B W01C
	21B	X04Z X05Z X06A X06B X06C
01.16.09‡↔		KPP
	01	B60A
01.16.11‡↔		KPP
	01	B60A
01.16.12‡↔		KPP
	01	B60A
01.17‡↔		KPP
	01	B60A
01.18.10↔		BORP KORP MBOR MKOR VAC VAC I VAC II VBOR VKOR
	01	B09A B09B B09C B09D
	04	E36A E36B
	06	G12A G16A G38A G38B
01.18.11↔		BORP KORP MBOR MKOR VAC VAC I VAC II VBOR VKOR
	01	B09A B09B B09C B09D
	04	E36A E36B
	06	G12A G16A G38A G38B
01.18.19↔		BORP KORP MBOR MKOR VAC VAC I VAC II VBOR VKOR
	01	B09A B09B B09C B09D
	04	E36A E36B
	06	G12A G16A G38A G38B
01.18.20↔		BORP KORP MBOR MKOR VAC VAC I VAC II VBOR VKOR
	01	B09A B09B B09C B09D
	04	E36A E36B
	06	G12A G16A G38A G38B
01.18.21↔		BORP KORP MBOR MKOR VAC VAC I VAC II VBOR VKOR
	01	B09A B09B B09C B09D
	04	E36A E36B
	06	G12A G16A G38A G38B
01.18.29↔		BORP KORP MBOR MKOR VAC VAC I VAC II VBOR VKOR
	01	B09A B09B B09C B09D
	04	E36A E36B
	06	G12A G16A G38A G38B
01.21↔		BORP KORP MBOR MKOR VAC VAC I VAC II VBOR VKOR
	01	B01A B02A B02B B09A B09B B09C B09D B20A B20B B20C
	03	D25A D25B
	04	E36A E36B
	05	F01A F01C F04Z F28A F59A F59B F59C F59D F59E F59F F59G
	06	G12A G16A G38A G38B
	08	I15A I15B
	09	J02A J02B J08Z
	10	K09A K09B
	21A	W01A W01B W01C
	21B	X06A X06B X06C
01.23.00↔		BORP MBOR VAC VAC I VAC II VBOR
	01	B01A B02A B02B B20A B20B B20C B20D
	04	E36A E36B
	06	G12A G16A G33Z G38A G38B G38C
	07	H33Z
	11	L33Z
	21A	W01A W01B W01C
	21B	X06A X06B X06C X07A X07B
01.23.10↔		BORP KORP MBOR MKOR VAC VAC I VAC II VBOR VKOR
	01	B01A B02A B02B B20A B20B B20C B20D
	04	E36A E36B
	06	G12A G16A G33Z G38A G38B G38C
	07	H33Z
	11	L33Z
	21A	W01A W01B W01C
	21B	X06A X06B X06C X07A X07B
01.23.20↔		BORP KORP MBOR MKOR VAC VAC I VAC II VBOR VKOR
	01	B01A B02A B02B B20A B20B B20C B20D
	04	E36A E36B
	06	G12A G16A G33Z G38A G38B G38C
	07	H33Z
	11	L33Z
	21A	W01A W01B W01C
	21B	X06A X06B X06C X07A X07B
01.23.21↔		BORP KORP MBOR MKOR VAC VAC I VAC II VBOR VKOR
	01	B01A B02A B02B B20A B20B B20C B20D
	04	E36A E36B
	06	G12A G16A G33Z G38A G38B G38C
	07	H33Z
	11	L33Z
	21A	W01A W01B W01C
	21B	X06A X06B X06C X07A X07B
01.23.29↔		BORP KORP MBOR MKOR VAC VAC I VAC II VBOR VKOR
	01	B01A B02A B02B B20A B20B B20C B20D
	04	E36A E36B
	06	G12A G16A G33Z G38A G38B G38C
	07	H33Z
	11	L33Z
	21A	W01A W01B W01C
	21B	X06A X06B X06C X07A X07B
01.23.99↔		BORP MBOR VAC VAC I VAC II VBOR
	01	B01A B02A B02B B20A B20B B20C B20D
	04	E36A E36B
	06	G12A G16A G33Z G38A G38B G38C
	07	H33Z
	11	L33Z
	21A	W01A W01B W01C
	21B	X06A X06B X06C X07A X07B
01.24.00↔		BORP MBOR VAC VBOR
	01	B01A B02A B02B B03A B03B B03C B09A B09B B09C B09D B20A B20B B20C
	03	D25A D25B
	04	E36A E36B
	06	G12A G16A G38A G38B
	08	I15A I15B I28A I28B
	09	J02A J02B J08Z
	21A	W01A W01B W01C
	21B	X06A X06B X06C
01.24.10↔		BORP KORP MBOR MKOR VAC VAC I VAC II VBOR VKOR
	01	B01A B02A B02B B03A B03B B03C B20A B20B B20C B20D
	03	D25A D25B
	04	E36A E36B
	06	G12A G16A G38A G38B
	08	I15A I15B I28A I28B
	09	J02A J02B J08Z
	21A	W01A W01B W01C
	21B	X06A X06B X06C
01.24.11↔		BORP KORP MBOR MKOR VAC VAC I VAC II VBOR VKOR
	01	B01A B02A B02B B03A B03B B03C B20A B20B B20C B20D
	03	D25A D25B
	04	E36A E36B
	06	G12A G16A G38A G38B
	08	I15A I15B I28A I28B

CHOP	MDC	DRG
	09	J02A J02B J08Z
	21A	W01A W01B W01C
	21B	X06A X06B X06C
01.24.12↔		BORP KORP MBOR MKOR VAC VAC I VAC II VBOR VKOR
	01	B01A B02A B02B B03A B03B B03C B20A B20B B20C B20D
	03	D25A D25B
	04	E36A E36B
	06	G12A G16A G38A G38B
	08	I15A I15B I28A I28B
	09	J02A J02B J08Z
	21A	W01A W01B W01C
	21B	X06A X06B X06C
01.24.13↔		BORP KORP MBOR MKOR VAC VAC I VAC II VBOR VKOR
	01	B01A B02A B02B B03A B03B B03C B20A B20B B20C B20D
	03	D25A D25B
	04	E36A E36B
	06	G12A G16A G38A G38B
	08	I15A I15B I28A I28B
	09	J02A J02B J08Z
	21A	W01A W01B W01C
	21B	X06A X06B X06C
01.24.14↔		BORP KORP MBOR MKOR VAC VAC I VAC II VBOR VKOR
	01	B01A B02A B02B B03A B03B B03C B20A B20B B20C B20D
	03	D25A D25B
	04	E36A E36B
	06	G12A G16A G38A G38B
	08	I15A I15B I28A I28B
	09	J02A J02B J08Z
	21A	W01A W01B W01C
	21B	X06A X06B X06C
01.24.15↔		BORP KORP MBOR MKOR VAC VAC I VAC II VBOR VKOR
	01	B01A B02A B02B B03A B03B B03C B20A B20B B20C B20D
	03	D25A D25B
	04	E36A E36B
	06	G12A G16A G38A G38B
	08	I15A I15B I28A I28B
	09	J02A J02B J08Z
	21A	W01A W01B W01C
	21B	X06A X06B X06C
01.24.16↔		BORP KORP MBOR MKOR VAC VAC I VAC II VBOR VKOR
	01	B01A B02A B02B B03A B03B B03C B20A B20B B20C B20D
	03	D25A D25B
	04	E36A E36B
	06	G12A G16A G38A G38B
	08	I15A I15B I28A I28B
	09	J02A J02B J08Z
	21A	W01A W01B W01C
	21B	X06A X06B X06C
01.24.20↔	01	B01A B02A B02B B03A B03B B03C B09A B09B B09C B09D B20A B20B B20C
	03	D25A D25B
	08	I15A I15B I28A I28B
	09	J02A J02B J08Z
	21A	W01A W01B W01C
	21B	X06A X06B X06C
01.24.21↔	01	B03A B03B B03C B09A B09B B09C B09D
	03	D25A D25B
	08	I15A I15B I28A I28B
	09	J02A J02B J08Z
	21A	W01A W01B W01C
	21B	X06A X06B X06C
01.24.22↔		BORP KORP MBOR MKOR VAC VAC I VAC II VBOR VKOR
	01	B01A B02A B02B B03A B03B B03C B09A B09B B09C B09D B20A B20B B20C
	03	D25A D25B
	04	E36A E36B
	06	G12A G16A G38A G38B
	08	I15A I15B I28A I28B
	09	J02A J02B J08Z
	21A	W01A W01B W01C
	21B	X06A X06B X06C
01.24.29↔		BORP KORP MBOR MKOR VAC VAC I VAC II VBOR VKOR
	01	B01A B02A B02B B03A B03B B03C B09A B09B B09C B09D B20A B20B B20C
	03	D25A D25B
	04	E36A E36B
	06	G12A G16A G38A G38B
	08	I15A I15B I28A I28B
	09	J02A J02B J08Z
	21A	W01A W01B W01C
	21B	X06A X06B X06C
01.24.30↔	01	B01A B02A B02B B03A B03B B03C B09A B09B B09C B09D B20A B20B B20C
	03	D12A D25A D25B
	08	I15A I15B I28A I28B
	09	J02A J02B J08Z
	21A	W01A W01B W01C
	21B	X06A X06B X06C
01.24.31↔		BORP KORP MBOR MKOR VAC VAC I VAC II VBOR VKOR
	01	B01A B02A B02B B03A B03B B03C B20A B20B B20C
	03	D12A D25A D25B
	04	E36A E36B
	06	G12A G16A G38A G38B
	08	I02A I02B I02C I09A I09B I09C I09D I09E I15A I15B I28A I28B
	09	J02A J02B J08Z
	21A	W01A W01B W01C
	21B	X06A X06B X06C
	Prä	B61A B61B B61C
01.24.32↔		BORP KORP MBOR MKOR VAC VAC I VAC II VBOR VKOR
	01	B01A B02A B02B B03A B03B B03C B20A B20B B20C
	03	D12A D25A D25B
	04	E36A E36B
	06	G12A G16A G38A G38B
	08	I02A I02B I02C I09A I09B I09C I09D I09E I15A I15B I28A I28B
	09	J02A J02B J08Z
	21A	W01A W01B W01C
	21B	X06A X06B X06C
	Prä	B61A B61B B61C
01.24.33↔		BORP KORP MBOR MKOR VAC VAC I VAC II VBOR VKOR
	01	B01A B02A B02B B03A B03B B03C B20A B20B B20C
	03	D12A D25A D25B
	04	E36A E36B
	06	G12A G16A G38A G38B
	08	I02A I02B I02C I09A I09B I09C I09D I09E I15A I15B I28A I28B
	09	J02A J02B J08Z
	21A	W01A W01B W01C
	21B	X06A X06B X06C
	Prä	B61A B61B B61C
01.24.34↔		BORP KORP MBOR MKOR VAC VAC I VAC II VBOR VKOR
	01	B01A B02A B02B B03A B03B B03C B20A B20B B20C B20D
	03	D12A D25A D25B

PROC

PROC

CHOP	MDC	DRG
	04	E36A E36B
	06	G12A G16A G38A G38B
	08	I15A I15B I28A I28B
	09	J02A J02B J08Z
	21A	W01A W01B W01C
	21B	X06A X06B X06C
01.24.35↔		BORP KORP MBOR MKOR VAC VAC I VAC II VBOR VKOR
	01	B01A B02A B02B B03A B03B B03C B20A B20B B20C B20D
	03	D12A D25A D25B
	04	E36A E36B
	06	G12A G16A G38A G38B
	08	I15A I15B I28A I28B
	09	J02A J02B J08Z
	21A	W01A W01B W01C
	21B	X06A X06B X06C
01.24.36↔		BORP KORP MBOR MKOR VAC VAC I VAC II VBOR VKOR
	01	B01A B02A B02B B03A B03B B03C B20A B20B B20C B20D
	03	D12A D25A D25B
	04	E36A E36B
	06	G12A G16A G38A G38B
	08	I15A I15B I28A I28B
	09	J02A J02B J08Z
	21A	W01A W01B W01C
	21B	X06A X06B X06C
01.24.37↔		BORP KORP MBOR MKOR VAC VAC I VAC II VBOR VKOR
	01	B01A B02A B02B B03A B03B B03C B20A B20B B20C B20D
	03	D12A D25A D25B
	04	E36A E36B
	06	G12A G16A G38A G38B
	08	I15A I15B I28A I28B
	09	J02A J02B J08Z
	21A	W01A W01B W01C
	21B	X06A X06B X06C
01.24.38↔		BORP KORP MBOR MKOR VAC VAC I VAC II VBOR VKOR
	01	B01A B02A B02B B03A B03B B03C B20A B20B B20C B20D
	03	D12A D25A D25B
	04	E36A E36B
	06	G12A G16A G38A G38B
	08	I15A I15B I28A I28B
	09	J02A J02B J08Z
	21A	W01A W01B W01C
	21B	X06A X06B X06C
01.24.39↔		BORP KORP MBOR MKOR VAC VAC I VAC II VBOR VKOR
	01	B01A B02A B02B B03A B03B B03C B20A B20B B20C B20D
	03	D12A D25A D25B
	04	E36A E36B
	06	G12A G16A G38A G38B
	08	I15A I15B I28A I28B
	09	J02A J02B J08Z
	21A	W01A W01B W01C
	21B	X06A X06B X06C
01.24.3A↔		BORP KORP MBOR MKOR VAC VAC I VAC II VBOR VKOR
	01	B01A B02A B02B B03A B03B B03C B20A B20B B20C B20D
	03	D12A D25A D25B
	04	E36A E36B
	06	G12A G16A G38A G38B
	08	I15A I15B I28A I28B
	09	J02A J02B J08Z
	21A	W01A W01B W01C
	21B	X06A X06B X06C
01.24.3B↔		BORP KORP MBOR MKOR VAC VAC I VAC II VBOR VKOR
	01	B01A B02A B02B B03A B03B B03C B20A B20B B20C B20D
	03	D12A D25A D25B
	04	E36A E36B
	06	G12A G16A G38A G38B
	08	I15A I15B I28A I28B
	09	J02A J02B J08Z
	21A	W01A W01B W01C
	21B	X06A X06B X06C
01.24.3C↔		BORP KORP MBOR MKOR VAC VAC I VAC II VBOR VKOR
	01	B01A B02A B02B B03A B03B B03C B20A B20B B20C B20D
	03	D12A D25A D25B
	04	E36A E36B
	06	G12A G16A G38A G38B
	08	I15A I15B I28A I28B
	09	J02A J02B J08Z
	21A	W01A W01B W01C
	21B	X06A X06B X06C
01.24.3D↔		BORP KORP MBOR MKOR VAC VAC I VAC II VBOR VKOR
	01	B01A B02A B02B B03A B03B B03C B20A B20B B20C B20D
	03	D12A D25A D25B
	04	E36A E36B
	06	G12A G16A G38A G38B
	08	I15A I15B I28A I28B
	09	J02A J02B J08Z
	21A	W01A W01B W01C
	21B	X06A X06B X06C
01.24.3E↔		BORP KORP MBOR MKOR VAC VAC I VAC II VBOR VKOR
	01	B01A B02A B02B B03A B03B B03C B20A B20B B20C
	03	D12A D25A D25B
	04	E36A E36B
	06	G12A G16A G38A G38B
	08	I15A I15B I28A I28B
	09	J02A J02B J08Z
	21A	W01A W01B W01C
	21B	X06A X06B X06C
01.24.3F↔		BORP KORP MBOR MKOR VAC VAC I VAC II VBOR VKOR
	01	B01A B02A B02B B03A B03B B03C B20A B20B B20C
	03	D12A D25A D25B
	04	E36A E36B
	06	G12A G16A G38A G38B
	08	I15A I15B I28A I28B
	09	J02A J02B J08Z
	21A	W01A W01B W01C
	21B	X06A X06B X06C
01.24.3G↔		BORP KORP MBOR MKOR VAC VAC I VAC II VBOR VKOR
	01	B01A B02A B02B B03A B03B B03C B20A B20B B20C B20D
	03	D12A D25A D25B
	04	E36A E36B
	06	G12A G16A G38A G38B
	08	I15A I15B I28A I28B
	09	J02A J02B J08Z
	21A	W01A W01B W01C
	21B	X06A X06B X06C
01.24.99↔		BORP KORP MBOR MKOR VAC VAC I VAC II VBOR VKOR
	01	B01A B02A B02B B03A B03B B03C B20A B20B B20C B20D
	03	D25A D25B
	04	E36A E36B
	06	G12A G16A G38A G38B
	08	I15A I15B I28A I28B

CHOP	MDC	DRG
	09	J02A J02B J08Z
	21A	W01A W01B W01C
	21B	X06A X06B X06C
01.25.00↔	01	B01A B02A B02B B03A B03B B03C B09A B09B B09C B09D B20A B20B B20C
	03	D25A D25B
	08	I15A I15B I28A I28B
	09	J02A J02B J08Z
	21A	W01A W01B W01C
	21B	X06A X06B X06C
01.25.10↔		BORP KORP MBOR MKOR VAC VAC I VAC II VBOR VKOR
	01	B01A B02A B02B B03A B03B B03C B20A B20B B20C B20D
	03	D25A D25B
	04	E36A E36B
	06	G12A G16A G38A G38B
	08	I15A I15B I28A I28B
	09	J02A J02B J08Z
	21A	W01A W01B W01C
	21B	X06A X06B X06C
01.25.11↔		BORP KORP MBOR MKOR VAC VAC I VAC II VBOR VKOR
	01	B01A B02A B02B B03A B03B B03C B20A B20B B20C B20D
	03	D25A D25B
	04	E36A E36B
	06	G12A G16A G38A G38B
	08	I15A I15B I28A I28B
	09	J02A J02B J08Z
	21A	W01A W01B W01C
	21B	X06A X06B X06C
01.25.12↔		BORP KORP MBOR MKOR VAC VAC I VAC II VBOR VKOR
	01	B01A B02A B02B B03A B03B B03C B20A B20B B20C B20D
	03	D25A D25B
	04	E36A E36B
	06	G12A G16A G38A G38B
	08	I15A I15B I28A I28B
	09	J02A J02B J08Z
	21A	W01A W01B W01C
	21B	X06A X06B X06C
01.25.13↔		BORP KORP MBOR MKOR VAC VAC I VAC II VBOR VKOR
	01	B01A B02A B02B B03A B03B B03C B20A B20B B20C B20D
	03	D25A D25B
	04	E36A E36B
	06	G12A G16A G38A G38B
	08	I15A I15B I28A I28B
	09	J02A J02B J08Z
	21A	W01A W01B W01C
	21B	X06A X06B X06C
01.25.14↔		BORP KORP MBOR MKOR VAC VAC I VAC II VBOR VKOR
	01	B01A B02A B02B B03A B03B B03C B20A B20B B20C B20D
	03	D25A D25B
	04	E36A E36B
	06	G12A G16A G38A G38B
	08	I15A I15B I28A I28B
	09	J02A J02B J08Z
	21A	W01A W01B W01C
	21B	X06A X06B X06C
01.25.19↔		BORP KORP MBOR MKOR VAC VAC I VAC II VBOR VKOR
	01	B01A B02A B02B B03A B03B B03C B20A B20B B20C B20D
	03	D25A D25B
	04	E36A E36B
	06	G12A G16A G38A G38B
	08	I15A I15B I28A I28B
	09	J02A J02B J08Z
	21A	W01A W01B W01C
	21B	X06A X06B X06C
01.25.20↔		BORP KORP MBOR MKOR VAC VAC I VAC II VBOR VKOR
	01	B01A B02A B02B B03A B03B B03C B20A B20B B20C B20D
	03	D25A D25B
	04	E36A E36B
	06	G12A G16A G38A G38B
	08	I15A I15B I28A I28B
	09	J02A J02B J08Z
	21A	W01A W01B W01C
	21B	X06A X06B X06C
01.25.21↔		BORP KORP MBOR MKOR VAC VAC I VAC II VBOR VKOR
	01	B01A B02A B02B B03A B03B B03C B20A B20B B20C B20D
	03	D25A D25B
	04	E36A E36B
	06	G12A G16A G38A G38B
	08	I15A I15B I28A I28B
	09	J02A J02B J08Z
	21A	W01A W01B W01C
	21B	X06A X06B X06C
01.25.99↔	01	B01A B02A B02B B03A B03B B03C B20A B20B B20C B20D
	03	D25A D25B
	08	I15A I15B I28A I28B
	09	J02A J02B J08Z
	21A	W01A W01B W01C
	21B	X06A X06B X06C
01.26↔		BORP MBOR VAC VAC I VAC II VBOR
	01	B01A B01B B02A B02B B09A B09B B09C B09D B20A B20B B20C
	03	D25A D25B
	04	E36A E36B
	06	G12A G16A G33Z G38A G38B G38C
	07	H33Z
	09	J02A J02B J08Z
	11	L33Z
	21B	X07A X07B
01.28↔		BORP MBOR VAC VAC I VAC II VBOR
	01	B09A B09B B09C B09D
	03	D25A D25B
	04	E36A E36B
	06	G12A G16A G33Z G38A G38B G38C
	07	H33Z
	09	J02A J02B J08Z
	11	L33Z
	21B	X07A X07B
01.29.00↔		BORP MBOR VAC VAC I VAC II VBOR
	01	B01A B01B B02A B02B B09A B09B B09C B09D B20A B20B B20C
	03	D25A D25B
	04	E36A E36B
	06	G12A G16A G33Z G38A G38B G38C
	07	H33Z
	09	J02A J02B J08Z
	11	L33Z
	21B	X07A X07B
01.29.10↔		BORP MBOR VAC VAC I VAC II VBOR
	01	B01A B01B B02A B02B B09A B09B B09C B09D B20A B20B B20C
	03	D25A D25B
	04	E36A E36B
	06	G12A G16A G33Z G38A G38B G38C
	07	H33Z
	09	J02A J02B J08Z
	11	L33Z
	21B	X07A X07B
01.29.99↔		BORP MBOR VAC VAC I VAC II VBOR
	01	B01A B01B B02A B02B B09A B09B

PROC

PROC

CHOP	MDC	DRG
		B09C B09D B20A B20B B20C
	03	D25A D25B
	04	E36A E36B
	06	G12A G16A G33Z G38A G38B G38C
	07	H33Z
	09	J02A J02B J08Z
	11	L33Z
	21B	X07A X07B
01.31.00↔		BORP MBOR VAC VBOR
	01	B01A B01B B09A B09B B09C B09D
	03	D25A D25B
	04	E36A E36B
	06	G12A G16A G33Z G38A G38B G38C
	07	H33Z
	08	I15A I15B
	09	J02A J02B J08Z
	11	L33Z
	21A	W01A W01B W01C
	21B	X06A X06B X06C X07A X07B
01.31.10↔		BORP MBOR VAC VAC I VAC II VBOR
	01	B01A B01B B09A B09B B09C B09D
	03	D25A D25B
	04	E36A E36B
	06	G12A G16A G33Z G38A G38B G38C
	07	H33Z
	08	I15A I15B
	09	J02A J02B J08Z
	11	L33Z
	21A	W01A W01B W01C
	21B	X06A X06B X06C X07A X07B
01.31.11↔		BORP MBOR VAC VAC I VAC II VBOR
	01	B01A B01B B09A B09B B09C B09D
	03	D25A D25B
	04	E36A E36B
	06	G12A G16A G33Z G38A G38B G38C
	07	H33Z
	08	I15A I15B
	09	J02A J02B J08Z
	11	L33Z
	21A	W01A W01B W01C
	21B	X06A X06B X06C X07A X07B
01.31.20↔		BORP MBOR VAC VAC I VAC II VBOR
	01	B01A B01B B09A B09B B09C B09D
	03	D25A D25B
	04	E36A E36B
	06	G12A G16A G33Z G38A G38B G38C
	07	H33Z
	08	I15A I15B
	09	J02A J02B J08Z
	11	L33Z
	21A	W01A W01B W01C
	21B	X06A X06B X06C X07A X07B
01.31.99↔	01	B01A B01B B09A B09B B09C B09D
	03	D25A D25B
	06	G33Z G38A G38B G38C
	07	H33Z
	08	I15A I15B
	09	J02A J02B J08Z
	11	L33Z
	21A	W01A W01B W01C
	21B	X06A X06B X06C X07A X07B
01.32.00↔		BORP KORP MBOR MKOR VAC VAC I VAC II VBOR VKOR
	01	B01A B02A B02B B20A B20B B20C B20D
	04	E36A E36B
	06	G12A G16A G33Z G38A G38B G38C
	07	H33Z
	11	L33Z
	21A	W01A W01B W01C
	21B	X06A X06B X06C X07A X07B
01.32.10↔		BORP KORP MBOR MKOR VAC VAC I VAC II VBOR VKOR
	01	B01A B02A B02B B20A B20B B20C B20D
	04	E36A E36B
	06	G12A G16A G33Z G38A G38B G38C
	07	H33Z
	11	L33Z
	21A	W01A W01B W01C
	21B	X06A X06B X06C X07A X07B
01.32.11↔		BORP KORP MBOR MKOR VAC VAC I VAC II VBOR VKOR
	01	B01A B02A B02B B20A B20B B20C B20D
	04	E36A E36B
	06	G12A G16A G33Z G38A G38B G38C
	07	H33Z
	11	L33Z
	21A	W01A W01B W01C
	21B	X06A X06B X06C X07A X07B
01.32.12↔		BORP KORP MBOR MKOR VAC VAC I VAC II VBOR VKOR
	01	B01A B02A B02B B20A B20B B20C B20D
	04	E36A E36B
	06	G12A G16A G33Z G38A G38B G38C
	07	H33Z
	11	L33Z
	21A	W01A W01B W01C
	21B	X06A X06B X06C X07A X07B
01.32.20↔		BORP KORP MBOR MKOR VAC VAC I VAC II VBOR VKOR
	01	B01A B02A B02B B20A B20B B20C B20D
	04	E36A E36B
	06	G12A G16A G33Z G38A G38B G38C
	07	H33Z
	11	L33Z
	21A	W01A W01B W01C
	21B	X06A X06B X06C X07A X07B
01.32.99↔		BORP KORP MBOR MKOR VAC VAC I VAC II VBOR VKOR
	01	B01A B02A B02B B20A B20B B20C B20D
	04	E36A E36B
	06	G12A G16A G33Z G38A G38B G38C
	07	H33Z
	11	L33Z
	21A	W01A W01B W01C
	21B	X06A X06B X06C X07A X07B
01.39.00↔	01	B01A B01B B02A B02B B09A B09B B09C B09D B20A B20B B20C
	03	D25A D25B
	06	G33Z G38A G38B G38C
	07	H33Z
	08	I15A I15B
	09	J02A J02B J08Z
	11	L33Z
	21A	W01A W01B W01C
	21B	X06A X06B X06C X07A X07B
01.39.10↔		BORP KORP MBOR MKOR VAC VAC I VAC II VBOR VKOR
	01	B01A B20A B20B B20C B20D
	03	D25A D25B
	04	E36A E36B
	06	G12A G16A G33Z G38A G38B G38C
	07	H33Z
	08	I15A I15B
	09	J02A J02B J08Z
	11	L33Z
	21A	W01A W01B W01C
	21B	X06A X06B X06C X07A X07B
01.39.11↔		BORP KORP MBOR MKOR VAC VAC I VAC II VBOR VKOR
	01	B01A B20A B20B B20C B20D
	03	D25A D25B
	04	E36A E36B
	06	G12A G16A G33Z G38A G38B G38C
	07	H33Z
	08	I15A I15B
	09	J02A J02B J08Z
	11	L33Z
	21A	W01A W01B W01C

CHOP	MDC	DRG
	21B	X06A X06B X06C X07A X07B
01.39.19↔		BORP KORP MBOR MKOR VAC VAC I VAC II VBOR VKOR
	01	B01A B01B B02A B02B B09A B09B B09C B09D B20A B20B B20C
	03	D25A D25B
	04	E36A E36B
	06	G12A G16A G33Z G38A G38B G38C
	07	H33Z
	08	I15A I15B
	09	J02A J02B J08Z
	11	L33Z
	21A	W01A W01B W01C
	21B	X06A X06B X06C X07A X07B
01.39.20↔		BORP KORP MBOR MKOR VAC VAC I VAC II VBOR VKOR
	01	B01A B20A B20B B20C B20D
	03	D25A D25B
	04	E36A E36B
	06	G12A G16A G33Z G38A G38B G38C
	07	H33Z
	08	I15A I15B
	09	J02A J02B J08Z
	11	L33Z
	21A	W01A W01B W01C
	21B	X06A X06B X06C X07A X07B
01.39.21↔		BORP KORP MBOR MKOR VAC VAC I VAC II VBOR VKOR
	01	B01A B20A B20B B20C B20D
	03	D25A D25B
	04	E36A E36B
	06	G12A G16A G33Z G38A G38B G38C
	07	H33Z
	08	I15A I15B
	09	J02A J02B J08Z
	11	L33Z
	21A	W01A W01B W01C
	21B	X06A X06B X06C X07A X07B
01.39.29↔		BORP KORP MBOR MKOR VAC VAC I VAC II VBOR VKOR
	01	B01A B01B B02A B02B B09A B09B B09C B09D B20A B20B B20C
	03	D25A D25B
	04	E36A E36B
	06	G12A G16A G33Z G38A G38B G38C
	07	H33Z
	08	I15A I15B
	09	J02A J02B J08Z
	11	L33Z
	21A	W01A W01B W01C
	21B	X06A X06B X06C X07A X07B
01.39.30↔		BORP KORP MBOR MKOR VAC VAC I VAC II VBOR VKOR
	01	B01A B01B B02A B02B B09A B09B B09C B09D B20A B20B B20C
	03	D25A D25B
	04	E36A E36B
	06	G12A G16A G33Z G38A G38B G38C
	07	H33Z
	08	I15A I15B
	09	J02A J02B J08Z
	11	L33Z
	21A	W01A W01B W01C
	21B	X06A X06B X06C X07A X07B
01.39.40↔		BORP MBOR VAC VAC I VAC II VBOR
	01	B01A B01B B02A B02B B09A B09B B09C B09D B20A B20B B20C
	03	D25A D25B
	04	E36A E36B
	06	G12A G16A G33Z G38A G38B G38C
	07	H33Z
	08	I15A I15B
	09	J02A J02B J08Z
	11	L33Z
	21A	W01A W01B W01C
	21B	X06A X06B X06C X07A X07B
01.39.41↔		BORP MBOR VAC VAC I VAC II VBOR
	01	B01A B01B B02A B02B B09A B09B B09C B09D B20A B20B B20C
	03	D25A D25B
	04	E36A E36B
	06	G12A G16A G33Z G38A G38B G38C
	07	H33Z
	08	I15A I15B
	09	J02A J02B J08Z
	11	L33Z
	21A	W01A W01B W01C
	21B	X06A X06B X06C X07A X07B
01.39.42↔	01	B01A B01B B02A B02B B09A B09B B09C B09D B20A B20B B20C
	03	D25A D25B
	06	G33Z G38A G38B G38C
	07	H33Z
	08	I15A I15B
	09	J02A J02B J08Z
	11	L33Z
	21A	W01A W01B W01C
	21B	X06A X06B X06C X07A X07B
01.39.99↔	01	B01A B01B B02A B02B B09A B09B B09C B09D B20A B20B B20C
	03	D25A D25B
	06	G33Z G38A G38B G38C
	07	H33Z
	08	I15A I15B
	09	J02A J02B J08Z
	11	L33Z
	21A	W01A W01B W01C
	21B	X06A X06B X06C X07A X07B
01.41↔		BORP KORP MBOR MKOR VAC VAC I VAC II VBOR VKOR
	01	B01A B20A B20B B20C B20D
	03	D25A D25B
	04	E36A E36B
	06	G12A G16A G33Z G38A G38B G38C
	07	H33Z
	08	I15A I15B
	09	J02A J02B J08Z
	11	L33Z
	21A	W01A W01B W01C
	21B	X06A X06B X06C X07A X07B
01.42↔		BORP KORP MBOR MKOR VAC VAC I VAC II VBOR VKOR
	01	B01A B20A B20B B20C B20D
	03	D25A D25B
	04	E36A E36B
	06	G12A G16A G33Z G38A G38B G38C
	07	H33Z
	08	I15A I15B
	09	J02A J02B J08Z
	11	L33Z
	21A	W01A W01B W01C
	21B	X06A X06B X06C X07A X07B
01.51.00↔		BORP MBOR VAC VBOR
	01	B01A B01B B02A B02B B20A B20B B20C
	03	D25A D25B
	04	E36A E36B
	06	G12A G16A G33Z G38A G38B G38C
	07	H33Z
	08	I15A I15B
	09	J02A J02B J08Z
	11	L33Z
	21A	W01A W01B W01C
	21B	X06A X06B X06C X07A X07B
01.51.10↔		BORP KORP MBOR MKOR VAC VAC I VAC II VBOR VKOR
	01	B01A B01B B02A B02B B20A B20B B20C
	03	D25A D25B
	04	E36A E36B
	06	G12A G16A G33Z G38A G38B G38C
	07	H33Z
	08	I15A I15B

PROC

PROC

CHOP	MDC	DRG
	09	J02A J02B J08Z
	11	L33Z
	21A	W01A W01B W01C
	21B	X06A X06B X06C X07A X07B
01.51.19↔		BORP MBOR VAC VBOR
	01	B01A B01B B02A B02B B20A B20B B20C
	03	D25A D25B
	04	E36A E36B
	06	G12A G16A G33Z G38A G38B G38C
	07	H33Z
	08	I15A I15B
	09	J02A J02B J08Z
	11	L33Z
	21A	W01A W01B W01C
	21B	X06A X06B X06C X07A X07B
01.51.21↔		BORP KORP MBOR MKOR VAC VAC I VAC II VBOR VKOR
	01	B01A B01B B02A B02B B20A B20B B20C
	03	D25A D25B
	04	E36A E36B
	06	G12A G16A G33Z G38A G38B G38C
	07	H33Z
	08	I15A I15B
	09	J02A J02B J08Z
	11	L33Z
	21A	W01A W01B W01C
	21B	X06A X06B X06C X07A X07B
01.51.22↔		BORP MBOR VAC VBOR
	01	B01A B01B B02A B02B B20A B20B B20C
	03	D25A D25B
	04	E36A E36B
	06	G12A G16A G33Z G38A G38B G38C
	07	H33Z
	08	I15A I15B
	09	J02A J02B J08Z
	11	L33Z
	21A	W01A W01B W01C
	21B	X06A X06B X06C X07A X07B
01.51.29↔		BORP MBOR VAC VBOR
	01	B01A B01B B02A B02B B20A B20B B20C
	03	D25A D25B
	04	E36A E36B
	06	G12A G16A G33Z G38A G38B G38C
	07	H33Z
	08	I15A I15B
	09	J02A J02B J08Z
	11	L33Z
	21A	W01A W01B W01C
	21B	X06A X06B X06C X07A X07B
01.51.31↔		BORP MBOR VAC VBOR
	01	B01A B01B B02A B02B B20A B20B B20C
	03	D25A D25B
	04	E36A E36B
	06	G12A G16A G33Z G38A G38B G38C
	07	H33Z
	08	I15A I15B
	09	J02A J02B J08Z
	11	L33Z
	21A	W01A W01B W01C
	21B	X06A X06B X06C X07A X07B
01.51.41↔		BORP KORP MBOR MKOR VAC VAC I VAC II VBOR VKOR
	01	B01A B01B B02A B02B B20A B20B B20C
	03	D25A D25B
	04	E36A E36B
	06	G12A G16A G33Z G38A G38B G38C
	07	H33Z
	08	I15A I15B
	09	J02A J02B J08Z
	11	L33Z
	21A	W01A W01B W01C
	21B	X06A X06B X06C X07A X07B
01.51.42↔		BORP KORP MBOR MKOR VAC VAC I VAC II VBOR VKOR
	01	B01A B01B B02A B02B B20A B20B B20C
	03	D25A D25B
	04	E36A E36B
	06	G12A G16A G33Z G38A G38B G38C
	07	H33Z
	08	I15A I15B
	09	J02A J02B J08Z
	11	L33Z
	21A	W01A W01B W01C
	21B	X06A X06B X06C X07A X07B
01.51.49↔	01	B01A B01B B02A B02B B20A B20B B20C
	03	D25A D25B
	06	G33Z G38A G38B G38C
	07	H33Z
	08	I15A I15B
	09	J02A J02B J08Z
	11	L33Z
	21A	W01A W01B W01C
	21B	X06A X06B X06C X07A X07B
01.52.00↔		BORP KORP MBOR MKOR VAC VAC I VAC II VBOR VKOR
	01	B01A B01B B02A B02B B20A B20B B20C
	03	D25A D25B
	04	E36A E36B
	06	G12A G16A G33Z G38A G38B G38C
	07	H33Z
	08	I15A I15B
	09	J02A J02B J08Z
	11	L33Z
	21A	W01A W01B W01C
	21B	X06A X06B X06C X07A X07B
01.52.10↔		BORP KORP MBOR MKOR VAC VAC I VAC II VBOR VKOR
	01	B01A B01B B02A B02B B20A B20B B20C
	03	D25A D25B
	04	E36A E36B
	06	G12A G16A G33Z G38A G38B G38C
	07	H33Z
	08	I15A I15B
	09	J02A J02B J08Z
	11	L33Z
	21A	W01A W01B W01C
	21B	X06A X06B X06C X07A X07B
01.52.11↔		BORP KORP MBOR MKOR VAC VAC I VAC II VBOR VKOR
	01	B01A B01B B02A B02B B20A B20B B20C
	03	D25A D25B
	04	E36A E36B
	06	G12A G16A G33Z G38A G38B G38C
	07	H33Z
	08	I15A I15B
	09	J02A J02B J08Z
	11	L33Z
	21A	W01A W01B W01C
	21B	X06A X06B X06C X07A X07B
01.52.99↔		BORP KORP MBOR MKOR VAC VAC I VAC II VBOR VKOR
	01	B01A B01B B02A B02B B20A B20B B20C
	03	D25A D25B
	04	E36A E36B
	06	G12A G16A G33Z G38A G38B G38C
	07	H33Z
	08	I15A I15B
	09	J02A J02B J08Z
	11	L33Z
	21A	W01A W01B W01C
	21B	X06A X06B X06C X07A X07B
01.53.00↔		BORP KORP MBOR MKOR VAC VAC I VAC II VBOR VKOR
	01	B01A B01B B02A B02B B20A B20B B20C
	03	D25A D25B
	04	E36A E36B
	06	G12A G16A G33Z

CHOP	MDC	DRG
		G38A G38B G38C
	07	H33Z
	08	I15A I15B
	09	J02A J02B J08Z
	11	L33Z
	21A	W01A W01B W01C
	21B	X06A X06B X06C
		X07A X07B
01.53.10↔		BORP KORP MBOR
		MKOR VAC VAC I
		VAC II VBOR VKOR
	01	B01A B01B B02A
		B02B B20A B20B
		B20C
	03	D25A D25B
	04	E36A E36B
	06	G12A G16A G33Z
		G38A G38B G38C
	07	H33Z
	08	I15A I15B
	09	J02A J02B J08Z
	11	L33Z
	21A	W01A W01B W01C
	21B	X06A X06B X06C
		X07A X07B
01.53.11↔		BORP KORP MBOR
		MKOR VAC VAC I
		VAC II VBOR VKOR
	01	B01A B01B B02A
		B02B B20A B20B
		B20C
	03	D25A D25B
	04	E36A E36B
	06	G12A G16A G33Z
		G38A G38B G38C
	07	H33Z
	08	I15A I15B
	09	J02A J02B J08Z
	11	L33Z
	21A	W01A W01B W01C
	21B	X06A X06B X06C
		X07A X07B
01.53.99↔		BORP KORP MBOR
		MKOR VAC VAC I
		VAC II VBOR VKOR
	01	B01A B01B B02A
		B02B B20A B20B
		B20C
	03	D25A D25B
	04	E36A E36B
	06	G12A G16A G33Z
		G38A G38B G38C
	07	H33Z
	08	I15A I15B
	09	J02A J02B J08Z
	11	L33Z
	21A	W01A W01B W01C
	21B	X06A X06B X06C
		X07A X07B
01.59↔		BORP MBOR VAC
		VBOR
	01	B01A B01B B02A
		B02B B20A B20B
		B20C
	03	D25A D25B
	04	E36A E36B
	06	G12A G16A G33Z
		G38A G38B G38C
	07	H33Z
	08	I15A I15B

CHOP	MDC	DRG
	09	J02A J02B J08Z
	11	L33Z
	21A	W01A W01B W01C
	21B	X06A X06B X06C
		X07A X07B
01.6X.10↔		BORP MBOR VAC
		VAC I VAC II VBOR
	01	B01A B02A B02B
		B20A B20B B20C
		B20D
	03	D25A D25B
	04	E36A E36B
	06	G12A G16A G33Z
		G38A G38B G38C
	07	H33Z
	08	I15A I15B I23A
		I23B
	09	J02A J02B J08Z
	11	L33Z
	21A	W01A W01B W01C
	21B	X06A X06B X06C
		X07A X07B
01.6X.11↔		BORP MBOR VAC
		VAC I VAC II VBOR
	01	B01A B02A B02B
		B20A B20B B20C
		B20D
	03	D25A D25B
	04	E36A E36B
	06	G12A G16A G33Z
		G38A G38B G38C
	07	H33Z
	08	I15A I15B I23A
		I23B
	09	J02A J02B J08Z
	11	L33Z
	21A	W01A W01B W01C
	21B	X06A X06B X06C
		X07A X07B
01.6X.20↔		BORP MBOR VAC
		VAC I VAC II VBOR
	01	B01A B02A B02B
		B20A B20B B20C
		B20D
	03	D25A D25B
	04	E36A E36B
	06	G12A G16A G33Z
		G38A G38B G38C
	07	H33Z
	08	I15A I15B I23A
		I23B
	09	J02A J02B J08Z
	11	L33Z
	21A	W01A W01B W01C
	21B	X06A X06B X06C
		X07A X07B
01.6X.21↔		BORP MBOR VAC
		VBOR
	01	B01A B02A B02B
		B09A B09B B09C
		B09D B20A B20B
		B20C
	03	D25A D25B
	04	E36A E36B
	06	G12A G16A G33Z
		G38A G38B G38C
	07	H33Z
	08	I15A I15B I23A
		I23B
	09	J02A J02B J08Z

CHOP	MDC	DRG
	11	L33Z
	21A	W01A W01B W01C
	21B	X06A X06B X06C
		X07A X07B
01.6X.22↔		BORP MBOR VAC
		VAC I VAC II VBOR
	01	B01A B02A B02B
		B20A B20B B20C
		B20D
	03	D25A D25B
	04	E36A E36B
	06	G12A G16A G33Z
		G38A G38B G38C
	07	H33Z
	08	I15A I15B I23A
		I23B
	09	J02A J02B J08Z
	11	L33Z
	21A	W01A W01B W01C
	21B	X06A X06B X06C
		X07A X07B
02.01↔		BORP MBOR VAC
		VBOR
	01	B01A B02A B02B
		B09A B09B B09C
		B09D B20A B20B
		B20C
	03	D25A D25B
	04	E36A E36B
	06	G12A G16A G33Z
		G38A G38B G38C
	07	H33Z
	08	I15A I15B
	09	J02A J02B J08Z
	11	L33Z
	21A	W01A W01B W01C
	21B	X06A X06B X07A
		X07B
02.02↔		BORP KORP MBOR
		MKOR VAC VAC I
		VAC II VBOR VKOR
	01	B01A B02A B02B
		B09A B09B B09C
		B09D B20A B20B
		B20C
	03	D25A D25B
	04	E36A E36B
	06	G12A G16A G33Z
		G38A G38B G38C
	07	H33Z
	08	I15A I15B
	09	J02A J02B J08Z
	11	L33Z
	21A	W01A W01B W01C
	21B	X06A X06B X07A
		X07B
02.03↔		BORP KORP MBOR
		MKOR VAC VAC I
		VAC II VBOR VKOR
	01	B01A B02A B02B
		B09A B09B B09C
		B09D B20A B20B
		B20C
	03	D25A D25B
	04	E36A E36B
	06	G12A G16A G33Z
		G38A G38B G38C
	07	H33Z
	08	I15A I15B I17Z
	09	J02A J02B J08Z

PROC

PROC

CHOP	MDC	DRG
	11	L33Z
	21A	W01A W01B W01C
	21B	X06A X06B X07A X07B
	22	Y02A Y02B Y02C
02.04.00↔		BORP MBOR VAC VAC I VAC II VBOR
	01	B01A B02A B02B B09A B09B B09C B09D B20A B20B B20C
	03	D25A D25B
	04	E36A E36B
	06	G12A G16A G33Z G38A G38B G38C
	07	H33Z
	08	I15A I15B
	09	J02A J02B J08Z
	11	L33Z
	21A	W01A W01B W01C
	21B	X06A X06B X07A X07B
02.04.10↔		BORP MBOR VAC VAC I VAC II VBOR
	01	B01A B02A B02B B09A B09B B09C B09D B20A B20B B20C
	03	D25A D25B
	04	E36A E36B
	06	G12A G16A G33Z G38A G38B G38C
	07	H33Z
	08	I15A I15B
	09	J02A J02B J08Z
	11	L33Z
	21A	W01A W01B W01C
	21B	X06A X06B X07A X07B
02.04.99↔		BORP MBOR VAC VAC I VAC II VBOR
	01	B01A B02A B02B B09A B09B B09C B09D B20A B20B B20C
	03	D25A D25B
	04	E36A E36B
	06	G12A G16A G33Z G38A G38B G38C
	07	H33Z
	08	I15A I15B
	09	J02A J02B J08Z
	11	L33Z
	21A	W01A W01B W01C
	21B	X06A X06B X07A X07B
02.05.00↔		BORP MBOR VAC VAC I VAC II VBOR
	01	B01A B02A B02B B09A B09B B09C B09D B20A B20B B20C
	03	D25A D25B
	04	E36A E36B
	06	G12A G16A G33Z G38A G38B G38C
	07	H33Z
	08	I15A I15B
	09	J02A J02B J08Z
	11	L33Z
	21A	W01A W01B W01C
	21B	X06A X06B X07A X07B
02.05.10↔		BORP KORP MBOR MKOR VAC VAC I VAC II VBOR VKOR
	01	B01A B02A B02B B09A B09B B09C B20A B20B
	03	D02A D24A D24B D24C D25A
	04	E36A E36B
	06	G12A G16A G33Z G38A G38B G38C
	07	H33Z
	08	I15A
	09	J02A J02B J08Z
	11	L33Z
	21A	W01A W01B W01C
	21B	X06A X06B X07A X07B
02.05.11↔		BORP KORP MBOR MKOR VAC VAC I VAC II VBOR VKOR
	01	B01A B02A B02B B09A B09B B09C B20A B20B
	03	D02A D24A D24B D24C D25A
	04	E36A E36B
	06	G12A G16A G33Z G38A G38B G38C
	07	H33Z
	08	I15A
	09	J02A J02B J08Z
	11	L33Z
	21A	W01A W01B W01C
	21B	X06A X06B X07A X07B
02.05.20↔		BORP KORP MBOR MKOR VAC VAC I VAC II VBOR VKOR
	01	B01A B02A B02B B09A B09B B09C B20A B20B
	02	C14Z
	03	D02A D24A D24B D24C D25A
	04	E36A E36B
	06	G12A G16A G33Z G38A G38B G38C
	07	H33Z
	08	I15A
	09	J02A J02B J08Z
	11	L33Z
	21A	W01A W01B W01C
	21B	X06A X06B X07A X07B
02.05.30↔		BORP KORP MBOR MKOR VAC VAC I VAC II VBOR VKOR
	01	B01A B02A B02B B09A B09B B09C B20A B20B
	02	C14Z
	03	D02A D24A D24B D24C D25A
	04	E36A E36B
	06	G12A G16A G33Z G38A G38B G38C
	07	H33Z
	08	I15A
	09	J02A J02B J08Z
	11	L33Z
	21A	W01A W01B W01C
	21B	X06A X06B X07A X07B
02.05.41↔		BORP MBOR VAC VAC I VAC II VBOR
	01	B01A B02A B02B B09A B09B B09C B09D B20A B20B B20C
	03	D25A D25B
	04	E36A E36B
	06	G12A G16A G33Z G38A G38B G38C
	07	H33Z
	08	I15A I15B
	09	J02A J02B J08Z
	11	L33Z
	21A	W01A W01B W01C
	21B	X06A X06B X07A X07B
02.05.99↔		BORP MBOR VAC VAC I VAC II VBOR
	01	B01A B02A B02B B09A B09B B09C B09D B20A B20B B20C
	03	D25A D25B
	04	E36A E36B
	06	G12A G16A G33Z G38A G38B G38C
	07	H33Z
	08	I15A I15B
	09	J02A J02B J08Z
	11	L33Z
	21A	W01A W01B W01C
	21B	X06A X06B X07A X07B
02.06.00↔		BORP MBOR VAC VAC I VAC II VBOR
	01	B01A B02A B02B B09A B09B B09C B09D B20A B20B B20C
	03	D25A D25B
	04	E36A E36B
	06	G12A G16A G33Z G38A G38B G38C
	07	H33Z
	08	I15A I15B
	09	J02A J02B J08Z
	11	L33Z
	21A	W01A W01B W01C
	21B	X06A X06B X07A X07B
02.06.10↔		BORP KORP MBOR MKOR VAC VAC I VAC II VBOR VKOR
	01	B01A B02A B02B B09A B09B B09C B09D B20A B20B B20C
	03	D02A D02B D24A D24B D24C D25A D25B
	04	E36A E36B
	06	G12A G16A G33Z

CHOP	MDC	DRG
		G38A G38B G38C
	07	H33Z
	08	I15A I15B
	09	J02A J02B J08Z
	11	L33Z
	21A	W01A W01B W01C
	21B	X06A X06B X07A X07B
02.06.20↔		BORP KORP MBOR MKOR VAC VAC I VAC II VBOR VKOR
	01	B01A B02A B02B B09A B09B B09C B09D B20A B20B B20C
	03	D25A D25B
	04	E36A E36B
	06	G12A G16A G33Z G38A G38B G38C
	07	H33Z
	08	I15A I15B
	09	J02A J02B J08Z
	11	L33Z
	21A	W01A W01B W01C
	21B	X06A X06B X07A X07B
02.06.30↔		BORP KORP MBOR MKOR VAC VAC I VAC II VBOR VKOR
	01	B01A B02A B02B B09A B09B B09C B09D B20A B20B B20C
	03	D02A D02B D24A D24B D24C D25A D25B
	04	E36A E36B
	06	G12A G16A G33Z G38A G38B G38C
	07	H33Z
	08	I15A I15B
	09	J02A J02B J08Z
	11	L33Z
	21A	W01A W01B W01C
	21B	X06A X06B X07A X07B
02.06.99↔		BORP MBOR VAC VAC I VAC II VBOR
	01	B01A B02A B02B B09A B09B B09C B09D B20A B20B B20C
	03	D25A D25B
	04	E36A E36B
	06	G12A G16A G33Z G38A G38B G38C
	07	H33Z
	08	I15A I15B
	09	J02A J02B J08Z
	11	L33Z
	21A	W01A W01B W01C
	21B	X06A X06B X07A X07B
02.07↔		BORP MBOR VAC VAC I VAC II VBOR
	01	B01A B02A B02B B09A B09B B09C B09D B20A B20B B20C
	03	D25A D25B
	04	E36A E36B
	06	G12A G16A G33Z G38A G38B G38C
	07	H33Z
	08	I15A I15B
	09	J02A J02B J08Z
	11	L33Z
	21A	W01A W01B W01C
	21B	X06A X06B X07A X07B
02.11↔		BORP MBOR VAC VBOR
	01	B01A B02A B02B B20A B20B B20C B20D
	03	D25A D25B
	04	E36A E36B
	06	G12A G16A G33Z G38A G38B G38C
	07	H33Z
	08	I15A I15B
	09	J02A J02B J08Z
	11	L33Z
	21A	W01A W01B W01C
	21B	X06A X06B X06C X07A X07B
02.12.00↔		BORP MBOR VAC VBOR
	01	B01A B02A B02B B20A B20B B20C B20D
	03	D25A D25B
	04	E36A E36B
	06	G12A G16A G33Z G38A G38B G38C
	07	H33Z
	08	I15A I15B
	09	J02A J02B J08Z
	11	L33Z
	21A	W01A W01B W01C
	21B	X06A X06B X06C X07A X07B
02.12.10↔		BORP MBOR VAC VAC I VAC II VBOR
	01	B01A B02A B02B B20A B20B B20C B20D
	03	D25A D25B
	04	E36A E36B
	06	G12A G16A G33Z G38A G38B G38C
	07	H33Z
	08	I15A I15B
	09	J02A J02B J08Z
	11	L33Z
	21A	W01A W01B W01C
	21B	X06A X06B X06C X07A X07B
02.12.20↔		BORP MBOR VAC VAC I VAC II VBOR
	01	B01A B02A B02B B20A B20B B20C B20D
	03	D25A D25B
	04	E36A E36B
	06	G12A G16A G33Z G38A G38B G38C
	07	H33Z
	08	I15A I15B
	09	J02A J02B J08Z
	11	L33Z
	21A	W01A W01B W01C
	21B	X06A X06B X06C X07A X07B
02.12.21↔		BORP MBOR VAC VAC I VAC II VBOR
	01	B01A B02A B02B B20A B20B B20C B20D
	03	D25A D25B
	04	E36A E36B
	06	G12A G16A G33Z G38A G38B G38C
	07	H33Z
	08	I15A I15B
	09	J02A J02B J08Z
	11	L33Z
	21A	W01A W01B W01C
	21B	X06A X06B X06C X07A X07B
02.12.22↔		BORP KORP MBOR MKOR VAC VAC I VAC II VBOR VKOR
	01	B01A B02A B02B B20A B20B B20C B20D
	03	D25A D25B
	04	E36A E36B
	06	G12A G16A G33Z G38A G38B G38C
	07	H33Z
	08	I15A I15B
	09	J02A J02B J08Z
	11	L33Z
	21A	W01A W01B W01C
	21B	X06A X06B X06C X07A X07B
02.12.31↔		BORP MBOR VAC VAC I VAC II VBOR
	01	B01A B02A B02B B20A B20B B20C B20D
	03	D25A D25B
	04	E36A E36B
	06	G12A G16A G33Z G38A G38B G38C
	07	H33Z
	08	I15A I15B
	09	J02A J02B J08Z
	11	L33Z
	21A	W01A W01B W01C
	21B	X06A X06B X06C X07A X07B
02.12.99↔		BORP MBOR VAC VBOR
	01	B01A B02A B02B B20A B20B B20C B20D
	03	D25A D25B
	04	E36A E36B
	06	G12A G16A G33Z G38A G38B G38C
	07	H33Z
	08	I15A I15B
	09	J02A J02B J08Z
	11	L33Z
	21A	W01A W01B W01C
	21B	X06A X06B X06C X07A X07B
02.13↔		BORP MBOR VAC

PROC

PROC

CHOP	MDC	DRG
		VAC I VAC II VBOR
	01	B01A B02A B02B B09A B09B B09C B09D B20A B20B B20C
	03	D25A D25B
	04	E36A E36B
	06	G12A G16A G33Z G38A G38B G38C
	07	H33Z
	08	I15A I15B
	09	J02A J02B J08Z
	11	L33Z
	21A	W01A W01B W01C
	21B	X06A X06B X06C X07A X07B
02.14↔		BORP KORP MBOR MKOR VAC VAC I VAC II VBOR VKOR
	01	B01A B01B B02A B02B B09A B09B B09C B09D B20A B20B B20C
	03	D25A D25B
	04	E36A E36B
	06	G12A G16A G33Z G38A G38B G38C
	07	H33Z
	08	I15A I15B
	09	J02A J02B J08Z
	11	L33Z
	21A	W01A W01B W01C
	21B	X06A X06B X06C X07A X07B
02.2↔		BORP KORP MBOR MKOR VAC VAC I VAC II VBOR VKOR
	01	B01A B20A B20B B20C B20D
	03	D25A D25B
	04	E36A E36B
	06	G12A G16A G33Z G38A G38B G38C
	07	H33Z
	08	I15A I15B
	09	J02A J02B J08Z
	11	L33Z
	21A	W01A W01B W01C
	21B	X06A X06B X06C X07A X07B
02.31↔		BORP KORP MBOR MKOR VAC VAC I VAC II VBOR VKOR
	01	B09A B09B B09C
	03	D25A D25B
	04	E36A E36B
	06	G12A G16A G33Z G38A G38B G38C
	07	H33Z
	08	I15A I15B
	09	J02A J02B J08Z
	11	L33Z
	21A	W01A W01B W01C
	21B	X06A X06B X06C X07A X07B
02.32↔		BORP KORP MBOR MKOR VAC VAC I VAC II VBOR VKOR
	01	B09A B09B B09C
	03	D25A D25B
	04	E36A E36B
	06	G12A G16A G33Z G38A G38B G38C
	07	H33Z
	08	I15A I15B
	09	J02A J02B J08Z
	11	L33Z
	21A	W01A W01B W01C
	21B	X06A X06B X06C X07A X07B
02.33↔		BORP KORP MBOR MKOR VAC VAC I VAC II VBOR VKOR
	01	B09A B09B B09C
	03	D25A D25B
	04	E36A E36B
	06	G12A G16A G33Z G38A G38B G38C
	07	H33Z
	08	I15A I15B
	09	J02A J02B J08Z
	11	L33Z
	21A	W01A W01B W01C
	21B	X06A X06B X06C X07A X07B
02.34↔		BORP KORP MBOR MKOR VAC VAC I VAC II VBOR VKOR
	01	B09A B09B B09C
	03	D25A D25B
	04	E36A E36B
	06	G02A G02B G12A G16A G33Z G38A G38B G38C
	07	H33Z
	08	I15A I15B
	09	J02A J02B J08Z
	11	L33Z
	21A	W01A W01B W01C
	21B	X06A X06B X06C X07A X07B
02.35↔		BORP KORP MBOR MKOR VAC VAC I VAC II VBOR VKOR
	01	B09A B09B B09C
	03	D25A D25B
	04	E36A E36B
	06	G12A G16A G33Z G38A G38B G38C
	07	H33Z
	08	I15A I15B
	09	J02A J02B J08Z
	11	L33Z
	21A	W01A W01B W01C
	21B	X06A X06B X06C X07A X07B
02.39↔		BORP MBOR VAC VBOR
	01	B09A B09B B09C B09D
	03	D25A D25B
	04	E36A E36B
	06	G12A G16A G33Z G38A G38B G38C
	07	H33Z
	08	I15A I15B
	09	J02A J02B J08Z
	11	L33Z
	21A	W01A W01B W01C
	21B	X06A X06B X06C X07A X07B
02.41.00↔		BORP MBOR VAC VBOR
	01	B09A B09B B09C B09D
	03	D25A D25B
	04	E36A E36B
	05	F04Z F13A F13B
	06	G12A G16A G38A G38B
	08	I15A I15B
	09	J02A J02B J08Z
	21A	W01A W01B W01C
	21B	X06A X06B X06C
02.41.10↔		BORP MBOR VAC VAC I VAC II VBOR
	01	B09A B09B B09C B09D
	03	D25A D25B
	04	E36A E36B
	05	F04Z F13A F13B
	06	G12A G16A G38A G38B
	08	I15A I15B
	09	J02A J02B J08Z
	21A	W01A W01B W01C
	21B	X06A X06B X06C
02.41.20↔		BORP MBOR VAC VAC I VAC II VBOR
	01	B09A B09B B09C B09D
	03	D25A D25B
	04	E36A E36B
	05	F04Z F13A F13B
	06	G02A G02B G12A G16A G38A G38B G38C
	08	I15A I15B
	09	J02A J02B J08Z
	21A	W01A W01B W01C
	21B	X06A X06B X06C
02.41.99↔		BORP MBOR VAC VAC I VAC II VBOR
	01	B09A B09B B09C B09D
	03	D25A D25B
	04	E36A E36B
	05	F04Z F13A F13B
	06	G12A G16A G38A G38B
	08	I15A I15B
	09	J02A J02B J08Z
	21A	W01A W01B W01C
	21B	X06A X06B X06C
02.42.00↔		BORP MBOR VAC VAC I VAC II VBOR
	01	B09A B09B B09C B09D
	03	D25A D25B
	04	E36A E36B
	05	F04Z F13A F13B
	06	G12A G16A G38A G38B
	08	I15A I15B
	09	J02A J02B J08Z
	21A	W01A W01B W01C
	21B	X06A X06B X06C
02.42.10↔		BORP MBOR VAC VAC I VAC II VBOR
	01	B09A B09B B09C

CHOP	MDC	DRG
	03	D25A D25B
	04	E36A E36B
	05	F04Z F13A F13B
	06	G12A G16A G38A G38B
	08	I15A I15B
	09	J02A J02B J08Z
	21A	W01A W01B W01C
	21B	X06A X06B X06C
02.42.20↔		BORP MBOR VAC VAC I VAC II VBOR
	01	B09A B09B B09C
	03	D25A D25B
	04	E36A E36B
	05	F04Z F13A F13B
	06	G02A G02B G12A G16A G38A G38B G38C
	08	I15A I15B
	09	J02A J02B J08Z
	21A	W01A W01B W01C
	21B	X06A X06B X06C
02.42.99↔		BORP MBOR VAC VAC I VAC II VBOR
	01	B09A B09B B09C
	03	D25A D25B
	04	E36A E36B
	05	F04Z F13A F13B
	06	G12A G16A G38A G38B
	08	I15A I15B
	09	J02A J02B J08Z
	21A	W01A W01B W01C
	21B	X06A X06B X06C
02.43↔		BORP MBOR VAC VAC I VAC II VBOR
	01	B09A B09B B09C B09D
	03	D25A D25B
	04	E36A E36B
	05	F04Z F13A F13B
	06	G12A G16A G33Z G38A G38B G38C
	07	H33Z
	08	I15A I15B
	09	J02A J02B J08Z
	11	L33Z
	21A	W01A W01B W01C
	21B	X06A X06B X06C X07A X07B
02.51.00↔		BORP KORP MBOR MKOR VAC VAC I VAC II VBOR VKOR
	01	B01A B02A B02B B20A B20B B20C
	04	E36A E36B
	05	F04Z F06A F06B
	06	G12A G16A G33Z G38A G38B G38C
	07	H33Z
	08	I08B I28A I28B I28C
	11	L33Z
	21A	W01A W01B W01C
	21B	X06A X06B X06C X07A X07B
02.51.11↔		BORP KORP MBOR MKOR VAC VAC I VAC II VBOR VKOR
	01	B01A B02A B02B B20A B20B B20C
	04	E36A E36B
	05	F04Z F06A F06B
	06	G12A G16A G33Z G38A G38B G38C
	07	H33Z
	08	I08B I28A I28B I28C
	11	L33Z
	21A	W01A W01B W01C
	21B	X06A X06B X06C X07A X07B
02.51.12↔		BORP KORP MBOR MKOR VAC VAC I VAC II VBOR VKOR
	01	B01A B02A B02B B20A B20B B20C
	04	E36A E36B
	05	F04Z F06A F06B
	06	G12A G16A G33Z G38A G38B G38C
	07	H33Z
	08	I08B I28A I28B I28C
	11	L33Z
	21A	W01A W01B W01C
	21B	X06A X06B X06C X07A X07B
02.51.14↔		BORP KORP MBOR MKOR VAC VAC I VAC II VBOR VKOR
	01	B01A B02A B02B B20A B20B B20C
	04	E36A E36B
	05	F04Z F06A F06B
	06	G12A G16A G33Z G38A G38B G38C
	07	H33Z
	08	I08B I28A I28B I28C
	11	L33Z
	21A	W01A W01B W01C
	21B	X06A X06B X06C X07A X07B
02.51.15↔		BORP KORP MBOR MKOR VAC VAC I VAC II VBOR VKOR
	01	B01A B02A B02B B20A B20B B20C
	04	E36A E36B
	05	F04Z F06A F06B
	06	G12A G16A G33Z G38A G38B G38C
	07	H33Z
	08	I08B I28A I28B I28C
	11	L33Z
	21A	W01A W01B W01C
	21B	X06A X06B X06C X07A X07B
02.51.99↔		BORP KORP MBOR MKOR VAC VAC I VAC II VBOR VKOR
	01	B01A B02A B02B B20A B20B B20C
	04	E36A E36B
	05	F04Z F06A F06B
	06	G12A G16A G33Z G38A G38B G38C
	07	H33Z
	08	I08B I28A I28B I28C
	11	L33Z
	21A	W01A W01B W01C
	21B	X06A X06B X06C X07A X07B
02.91↔		BORP MBOR VAC VAC I VAC II VBOR
	01	B09A B09B B09C B09D
	03	D25A D25B
	04	E36A E36B
	06	G12A G16A G33Z G38A G38B G38C
	07	H33Z
	08	I15A I15B
	09	J02A J02B J08Z
	11	L33Z
	21A	W01A W01B W01C
	21B	X06A X06B X06C X07A X07B
02.92↔		BORP MBOR VAC VAC I VAC II VBOR
	01	B01A B02A B02B B09A B09B B09C B09D B20A B20B B20C
	03	D25A D25B
	04	E36A E36B
	06	G12A G16A G33Z G38A G38B G38C
	07	H33Z
	08	I15A I15B
	09	J02A J02B J08Z
	11	L33Z
	21A	W01A W01B W01C
	21B	X06A X06B X06C X07A X07B
02.93.30↔		BORP KORP MBOR MKOR VAC VAC I VAC II VBOR VKOR
	01	B01A B01B B02A B02B B20A B20B B20C B21A B21B B21C B21D B21E B21F
	03	D25A D25B
	04	E36A E36B
	06	G12A G16A G33Z G38A G38B G38C
	07	H33Z
	08	I15A I15B
	09	J02A J02B J08Z
	11	L33Z
	21A	W01A W01B W01C
	21B	X06A X06B X06C X07A X07B
02.93.31↔		BORP KORP MBOR MKOR VAC VAC I VAC II VBOR VKOR
	01	B01A B01B B02A B02B B20A B20B B20C B21A B21B B21C B21D B21E B21F
	03	D25A D25B
	04	E36A E36B
	06	G12A G16A G33Z G38A G38B G38C
	07	H33Z

PROC

PROC

CHOP	MDC	DRG
	08	I15A I15B
	09	J02A J02B J08Z
	11	L33Z
	21A	W01A W01B W01C
	21B	X06A X06B X06C
		X07A X07B
02.93.32↔		BORP KORP MBOR
		MKOR VAC VAC I
		VAC II VBOR VKOR
	01	B01A B01B B02A
		B02B B20A B20B
		B20C B21A B21B
		B21C B21D B21E
		B21F
	03	D25A D25B
	04	E36A E36B
	06	G12A G16A G33Z
		G38A G38B G38C
	07	H33Z
	08	I15A I15B
	09	J02A J02B J08Z
	11	L33Z
	21A	W01A W01B W01C
	21B	X06A X06B X06C
		X07A X07B
02.93.33↔		BORP KORP MBOR
		MKOR VAC VAC I
		VAC II VBOR VKOR
	01	B01A B01B B02A
		B02B B20A B20B
		B20C B21A B21B
		B21C B21D B21E
		B21F
	03	D25A D25B
	04	E36A E36B
	06	G12A G16A G33Z
		G38A G38B G38C
	07	H33Z
	08	I15A I15B
	09	J02A J02B J08Z
	11	L33Z
	21A	W01A W01B W01C
	21B	X06A X06B X06C
		X07A X07B
02.93.34↔		BORP KORP MBOR
		MKOR VAC VAC I
		VAC II VBOR VKOR
	01	B01A B01B B02A
		B02B B20A B20B
		B20C B21A B21B
		B21C B21D B21E
		B21F
	03	D25A D25B
	04	E36A E36B
	06	G12A G16A G33Z
		G38A G38B G38C
	07	H33Z
	08	I15A I15B
	09	J02A J02B J08Z
	11	L33Z
	21A	W01A W01B W01C
	21B	X06A X06B X06C
		X07A X07B
02.93.39↔		BORP KORP MBOR
		MKOR VAC VAC I
		VAC II VBOR VKOR
	01	B01A B01B B02A
		B02B B20A B20B
		B20C B21A B21B
		B21C B21D B21E
		B21F
	03	D25A D25B
	04	E36A E36B
	06	G12A G16A G33Z
		G38A G38B G38C
	07	H33Z
	08	I15A I15B
	09	J02A J02B J08Z
	11	L33Z
	21A	W01A W01B W01C
	21B	X06A X06B X06C
		X07A X07B
02.93.40↔	01	B01A B01B B02A
		B02B B09A B09B
		B09C B09D B20A
		B20B B20C
	03	D25A D25B
	06	G33Z G38A G38B
		G38C
	07	H33Z
	09	J02A J02B J08Z
	11	L33Z
	21A	W01A W01B W01C
	21B	X06A X06B X06C
		X07A X07B
02.93.41↔	01	B01A B01B B02A
		B02B B09A B09B
		B09C B09D B20A
		B20B B20C
	03	D25A D25B
	06	G33Z G38A G38B
		G38C
	07	H33Z
	09	J02A J02B J08Z
	11	L33Z
	21A	W01A W01B W01C
	21B	X06A X06B X06C
		X07A X07B
02.93.42↔	01	B01A B01B B02A
		B02B B09A B09B
		B09C B09D B20A
		B20B B20C
	03	D25A D25B
	06	G33Z G38A G38B
		G38C
	07	H33Z
	09	J02A J02B J08Z
	11	L33Z
	21A	W01A W01B W01C
	21B	X06A X06B X06C
		X07A X07B
02.93.49↔	01	B01A B01B B02A
		B02B B09A B09B
		B09C B09D B20A
		B20B B20C
	03	D25A D25B
	06	G33Z G38A G38B
		G38C
	07	H33Z
	09	J02A J02B J08Z
	11	L33Z
	21A	W01A W01B W01C
	21B	X06A X06B X06C
		X07A X07B
02.93.51↔	01	B01A B02A B02B
		B09A B09B B09C
		B09D B20A B20B
		B20C
	03	D25A D25B
	06	G33Z G38A G38B
		G38C
	07	H33Z
	08	I15A I15B
	09	J02A J02B J08Z
	11	L33Z
	21A	W01A W01B W01C
	21B	X06A X06B X06C
		X07A X07B
02.94‡↔	01	B60A
	08	I10A I10B
	21A	W01A W01B W01C
		W01D W01E
02.96↔		BORP MBOR VAC
		VAC I VAC II VBOR
	01	B01A B01B B02A
		B02B B09A B09B
		B09C B09D B20A
		B20B B20C
	04	E36A E36B
	06	G12A G16A G33Z
		G38A G38B G38C
	07	H33Z
	11	L33Z
	21A	W01A W01B W01C
	21B	X06A X06B X06C
		X07A X07B
02.97.10↔		BORP KORP MBOR
		MKOR VAC VAC I
		VAC II VBOR VKOR
	01	B21A B21B B21C
		B21D B21E B21F
	04	E36A E36B
	06	G12A G16A G38A
		G38B
02.97.11↔		BORP KORP MBOR
		MKOR VAC VAC I
		VAC II VBOR VKOR
	01	B21A B21B B21C
		B21D B21E B21F
	04	E36A E36B
	06	G12A G16A G38A
		G38B
02.97.12↔		BORP KORP MBOR
		MKOR VAC VAC I
		VAC II VBOR VKOR
	01	B21A B21B B21C
		B21D B21E B21F
	04	E36A E36B
	06	G12A G16A G38A
		G38B
02.97.14↔		BORP KORP MBOR
		MKOR VAC VAC I
		VAC II VBOR VKOR
	01	B21A B21B B21C
		B21D B21E B21F
	04	E36A E36B
	06	G12A G16A G38A
		G38B
02.97.15↔		BORP KORP MBOR
		MKOR VAC VAC I
		VAC II VBOR VKOR
	01	B21A B21B B21C
		B21D B21E B21F
	04	E36A E36B
	06	G12A G16A G38A
		G38B
02.97.19↔		BORP KORP MBOR
		MKOR VAC VAC I
		VAC II VBOR VKOR
	01	B21A B21B B21C

CHOP	MDC	DRG
		B21D B21E B21F
	04	E36A E36B
	06	G12A G16A G38A G38B
02.98.10↔	01	B21A B21B B22Z
02.98.11↔	01	B21A B21B B22Z
02.98.12↔	01	B21A B21B B22Z
02.98.13↔	01	B21A B21B B22Z
02.98.19↔	01	B21A B21B B22Z
02.99.10↔		BORP KORP MBOR MKOR VAC VAC I VAC II VBOR VKOR
	01	B01A B01B B02A B02B B09A B09B B09C B09D B20A B20B B20C
	03	D25A D25B
	04	E36A E36B
	06	G12A G16A G33Z G38A G38B G38C
	07	H33Z
	09	J02A J02B J08Z
	11	L33Z
	21A	W01A W01B W01C
	21B	X06A X06B X06C X07A X07B
02.99.11↔		BORP KORP MBOR MKOR VAC VAC I VAC II VBOR VKOR
	01	B01A B01B B02A B02B B09A B09B B09C B09D B20A B20B B20C
	03	D25A D25B
	04	E36A E36B
	06	G12A G16A G33Z G38A G38B G38C
	07	H33Z
	09	J02A J02B J08Z
	11	L33Z
	21A	W01A W01B W01C
	21B	X06A X06B X06C X07A X07B
02.99.12↔		BORP KORP MBOR MKOR VAC VAC I VAC II VBOR VKOR
	01	B01A B01B B02A B02B B09A B09B B09C B09D B20A B20B B20C
	03	D25A D25B
	04	E36A E36B
	06	G12A G16A G33Z G38A G38B G38C
	07	H33Z
	09	J02A J02B J08Z
	11	L33Z
	21A	W01A W01B W01C
	21B	X06A X06B X06C X07A X07B
02.99.13↔		BORP KORP MBOR MKOR VAC VAC I VAC II VBOR VKOR
	01	B01A B01B B02A B02B B09A B09B B09C B09D B20A B20B B20C
	03	D25A D25B
	04	E36A E36B
	06	G12A G16A G33Z G38A G38B G38C
	07	H33Z
	09	J02A J02B J08Z
	11	L33Z
	21A	W01A W01B W01C
	21B	X06A X06B X06C X07A X07B
02.99.14↔		BORP KORP MBOR MKOR VAC VAC I VAC II VBOR VKOR
	01	B01A B01B B02A B02B B09A B09B B09C B09D B20A B20B B20C
	03	D25A D25B
	04	E36A E36B
	06	G12A G16A G33Z G38A G38B G38C
	07	H33Z
	09	J02A J02B J08Z
	11	L33Z
	21A	W01A W01B W01C
	21B	X06A X06B X06C X07A X07B
02.99.20↔		BORP MBOR VAC VAC I VAC II VBOR
	01	B01A B01B B02A B02B B09A B09B B09C B09D B20A B20B B20C
	03	D25A D25B
	04	E36A E36B
	06	G12A G16A G33Z G38A G38B G38C
	07	H33Z
	09	J02A J02B J08Z
	11	L33Z
	21A	W01A W01B W01C
	21B	X06A X06B X06C X07A X07B
02.99.29↔		BORP MBOR VAC VBOR
	01	B01A B01B B02A B02B B09A B09B B09C B09D B20A B20B B20C
	03	D25A D25B
	04	E36A E36B
	06	G12A G16A G33Z G38A G38B G38C
	07	H33Z
	09	J02A J02B J08Z
	11	L33Z
	21A	W01A W01B W01C
	21B	X06A X06B X06C X07A X07B
02.99.30↔		BORP MBOR VAC VBOR
	01	B01A B01B B02A B02B B09A B09B B09C B09D B20A B20B B20C
	03	D25A D25B
	04	E36A E36B
	06	G12A G16A G33Z G38A G38B G38C
	07	H33Z
	09	J02A J02B J08Z
	11	L33Z
	21A	W01A W01B W01C
	21B	X06A X06B X06C X07A X07B
02.99.31↔		BORP MBOR VAC VBOR
	01	B01A B01B B02A B02B B09A B09B B09C B09D B20A B20B B20C
	03	D25A D25B
	04	E36A E36B
	06	G12A G16A G33Z G38A G38B G38C
	07	H33Z
	09	J02A J02B J08Z
	11	L33Z
	21A	W01A W01B W01C
	21B	X06A X06B X06C X07A X07B
02.99.40↔		BORP MBOR VAC VBOR
	01	B01A B01B B02A B02B B09A B09B B09C B09D B20A B20B B20C
	03	D25A D25B
	04	E36A E36B
	06	G12A G16A G33Z G38A G38B G38C
	07	H33Z
	09	J02A J02B J08Z
	11	L33Z
	21A	W01A W01B W01C
	21B	X06A X06B X06C X07A X07B
02.99.41↔		BORP MBOR VAC VBOR
	01	B01A B01B B02A B02B B09A B09B B09C B09D B20A B20B B20C
	03	D25A D25B
	04	E36A E36B
	06	G12A G16A G33Z G38A G38B G38C
	07	H33Z
	09	J02A J02B J08Z
	11	L33Z
	21A	W01A W01B W01C
	21B	X06A X06B X06C X07A X07B
02.99.50↔		BORP KORP MBOR MKOR VAC VAC I VAC II VBOR VKOR
	01	B01A B01B B02A B02B B09A B09B B09C B09D B20A B20B B20C
	03	D25A D25B
	04	E36A E36B
	06	G12A G16A G33Z G38A G38B G38C
	07	H33Z
	09	J02A J02B J08Z
	11	L33Z
	21A	W01A W01B W01C
	21B	X06A X06B X06C X07A X07B
02.99.90↔	01	B01A B01B B02A B02B B09A B09B B09C B09D B20A

PROC

PROC

CHOP	MDC	DRG
		B20B B20C
	03	D25A D25B
	06	G33Z G38A G38B G38C
	07	H33Z
	09	J02A J02B J08Z
	11	L33Z
	21A	W01A W01B W01C
	21B	X06A X06B X06C X07A X07B
02.9A.11↔		BORP KORP MBOR MKOR VAC VAC I VAC II VBOR VKOR
	01	B21A B21B B21C B21D B21E B21F
	04	E36A E36B
	06	G12A G16A G38A G38B
03.03.09↔	01	B03A B03B B03C
	08	I10A I10B I10C
	09	J11A J11B
	10	K09A K09B
	21A	W01A W01B W01C
	21B	X06A X06B X06C
03.03.11↔	01	B03A B03B B03C
	08	I10A I10B I10C
	09	J11A J11B
	10	K09A K09B
	21A	W01A W01B W01C
	21B	X06A X06B X06C
03.03.12↔	01	B03A B03B B03C
	08	I10A I10B I10C
	09	J11A J11B
	10	K09A K09B
	21A	W01A W01B W01C
	21B	X06A X06B X06C
03.03.13↔	01	B03A B03B B03C
	08	I10A I10B
	09	J11A J11B
	10	K09A K09B
	21A	W01A W01B W01C
	21B	X06A X06B X06C
03.03.14↔	01	B03A B03B B03C
	08	I10A I10B
	09	J11A J11B
	10	K09A K09B
	21A	W01A W01B W01C
	21B	X06A X06B X06C
03.03.15↔	01	B03A B03B B03C
	08	I10A I10B
	09	J11A J11B
	10	K09A K09B
	21A	W01A W01B W01C
	21B	X06A X06B X06C
03.03.16↔	01	B03A B03B B03C
	08	I10A I10B
	09	J11A J11B
	10	K09A K09B
	21A	W01A W01B W01C
	21B	X06A X06B X06C
03.03.17↔	01	B03A B03B B03C
	08	I10A I10B
	09	J11A J11B
	10	K09A K09B
	21A	W01A W01B W01C
	21B	X06A X06B X06C
03.03.18↔	01	B03A B03B B03C
	08	I10A I10B
	09	J11A J11B
	10	K09A K09B
	21A	W01A W01B W01C
	21B	X06A X06B X06C
03.03.1A↔	01	B03A B03B B03C
	08	I10A I10B
	09	J11A J11B
	10	K09A K09B
	21A	W01A W01B W01C
	21B	X06A X06B X06C
03.03.1B↔	01	B03A B03B B03C
	08	I10A I10B
	09	J11A J11B
	10	K09A K09B
	21A	W01A W01B W01C
	21B	X06A X06B X06C
03.03.21↔		BORP MBOR VAC VAC I VAC II VBOR
	01	B03A B03B B03C
	04	E36A E36B
	06	G12A G16A G38A G38B
	08	I10A I10B I10C
	09	J11A J11B
	10	K09A K09B
	21A	W01A W01B W01C
	21B	X06A X06B X06C
03.03.22↔		BORP MBOR VAC VAC I VAC II VBOR
	01	B03A B03B B03C
	04	E36A E36B
	06	G12A G16A G38A G38B
	08	I10A I10B I10C
	09	J11A J11B
	10	K09A K09B
	21A	W01A W01B W01C
	21B	X06A X06B X06C
03.03.23↔		BORP MBOR VAC VAC I VAC II VBOR
	01	B03A B03B B03C
	04	E36A E36B
	06	G12A G16A G38A G38B
	08	I10A I10B
	09	J11A J11B
	10	K09A K09B
	21A	W01A W01B W01C
	21B	X06A X06B X06C
03.03.24↔		BORP MBOR VAC VAC I VAC II VBOR
	01	B03A B03B B03C
	04	E36A E36B
	06	G12A G16A G38A G38B
	08	I10A I10B
	09	J11A J11B
	10	K09A K09B
	21A	W01A W01B W01C
	21B	X06A X06B X06C
03.03.25↔		BORP MBOR VAC VAC I VAC II VBOR
	01	B03A B03B B03C
	04	E36A E36B
	06	G12A G16A G38A G38B
	08	I10A I10B
	09	J11A J11B
	10	K09A K09B
	21A	W01A W01B W01C
	21B	X06A X06B X06C
03.03.26↔		BORP MBOR VAC VAC I VAC II VBOR
	01	B03A B03B B03C
	04	E36A E36B
	06	G12A G16A G38A G38B
	08	I10A I10B
	09	J11A J11B
	10	K09A K09B
	21A	W01A W01B W01C
	21B	X06A X06B X06C
03.03.27↔		BORP MBOR VAC VAC I VAC II VBOR
	01	B03A B03B B03C
	04	E36A E36B
	06	G12A G16A G38A G38B
	08	I10A I10B
	09	J11A J11B
	10	K09A K09B
	21A	W01A W01B W01C
	21B	X06A X06B X06C
03.03.28↔		BORP MBOR VAC VAC I VAC II VBOR
	01	B03A B03B B03C
	04	E36A E36B
	06	G12A G16A G38A G38B
	08	I10A I10B
	09	J11A J11B
	10	K09A K09B
	21A	W01A W01B W01C
	21B	X06A X06B X06C
03.03.2A↔		BORP MBOR VAC VAC I VAC II VBOR
	01	B03A B03B B03C
	04	E36A E36B
	06	G12A G16A G38A G38B
	08	I10A I10B
	09	J11A J11B
	10	K09A K09B
	21A	W01A W01B W01C
	21B	X06A X06B X06C
03.03.2B↔		BORP MBOR VAC VAC I VAC II VBOR
	01	B03A B03B B03C
	04	E36A E36B
	06	G12A G16A G38A G38B
	08	I10A I10B
	09	J11A J11B
	10	K09A K09B
	21A	W01A W01B W01C
	21B	X06A X06B X06C
03.03.31↔		BORP MBOR VAC VAC I VAC II VBOR
	01	B03A B03B B03C
	04	E36A E36B
	06	G12A G16A G38A G38B
	08	I10A I10B I10C
	09	J11A J11B
	10	K09A K09B
	21A	W01A W01B W01C
	21B	X06A X06B X06C
03.03.32↔		BORP MBOR VAC VAC I VAC II VBOR
	01	B03A B03B B03C
	04	E36A E36B
	06	G12A G16A G38A

CHOP	MDC	DRG
		G38B
	08	I10A I10B I10C
	09	J11A J11B
	10	K09A K09B
	21A	W01A W01B W01C
	21B	X06A X06B X06C
03.03.33↔		BORP MBOR VAC
		VAC I VAC II VBOR
	01	B03A B03B B03C
	04	E36A E36B
	06	G12A G16A G38A
		G38B
	08	I10A I10B
	09	J11A J11B
	10	K09A K09B
	21A	W01A W01B W01C
	21B	X06A X06B X06C
03.03.34↔		BORP MBOR VAC
		VAC I VAC II VBOR
	01	B03A B03B B03C
	04	E36A E36B
	06	G12A G16A G38A
		G38B
	08	I10A I10B
	09	J11A J11B
	10	K09A K09B
	21A	W01A W01B W01C
	21B	X06A X06B X06C
03.03.35↔		BORP MBOR VAC
		VAC I VAC II VBOR
	01	B03A B03B B03C
	04	E36A E36B
	06	G12A G16A G38A
		G38B
	08	I10A I10B
	09	J11A J11B
	10	K09A K09B
	21A	W01A W01B W01C
	21B	X06A X06B X06C
03.03.36↔		BORP MBOR VAC
		VAC I VAC II VBOR
	01	B03A B03B B03C
	04	E36A E36B
	06	G12A G16A G38A
		G38B
	08	I10A I10B
	09	J11A J11B
	10	K09A K09B
	21A	W01A W01B W01C
	21B	X06A X06B X06C
03.03.37↔		BORP MBOR VAC
		VAC I VAC II VBOR
	01	B03A B03B B03C
	04	E36A E36B
	06	G12A G16A G38A
		G38B
	08	I10A I10B
	09	J11A J11B
	10	K09A K09B
	21A	W01A W01B W01C
	21B	X06A X06B X06C
03.03.38↔		BORP MBOR VAC
		VAC I VAC II VBOR
	01	B03A B03B B03C
	04	E36A E36B
	06	G12A G16A G38A
		G38B
	08	I10A I10B
	09	J11A J11B
	10	K09A K09B
	21A	W01A W01B W01C
	21B	X06A X06B X06C
03.03.3A↔		BORP MBOR VAC
		VAC I VAC II VBOR
	01	B03A B03B B03C
	04	E36A E36B
	06	G12A G16A G38A
		G38B
	08	I10A I10B
	09	J11A J11B
	10	K09A K09B
	21A	W01A W01B W01C
	21B	X06A X06B X06C
03.03.3B↔		BORP MBOR VAC
		VAC I VAC II VBOR
	01	B03A B03B B03C
	04	E36A E36B
	06	G12A G16A G38A
		G38B
	08	I10A I10B
	09	J11A J11B
	10	K09A K09B
	21A	W01A W01B W01C
	21B	X06A X06B X06C
03.03.41↔	01	B03A B03B B03C
	08	I10A I10B I10C
	09	J11A J11B
	10	K09A K09B
	21A	W01A W01B W01C
	21B	X06A X06B X06C
03.03.42↔	01	B03A B03B B03C
	08	I10A I10B I10C
	09	J11A J11B
	10	K09A K09B
	21A	W01A W01B W01C
	21B	X06A X06B X06C
03.03.43↔	01	B03A B03B B03C
	08	I10A I10B
	09	J11A J11B
	10	K09A K09B
	21A	W01A W01B W01C
	21B	X06A X06B X06C
03.03.44↔	01	B03A B03B B03C
	08	I10A I10B
	09	J11A J11B
	10	K09A K09B
	21A	W01A W01B W01C
	21B	X06A X06B X06C
03.03.45↔	01	B03A B03B B03C
	08	I10A I10B
	09	J11A J11B
	10	K09A K09B
	21A	W01A W01B W01C
	21B	X06A X06B X06C
03.03.46↔	01	B03A B03B B03C
	08	I10A I10B
	09	J11A J11B
	10	K09A K09B
	21A	W01A W01B W01C
	21B	X06A X06B X06C
03.03.47↔	01	B03A B03B B03C
	08	I10A I10B
	09	J11A J11B
	10	K09A K09B
	21A	W01A W01B W01C
	21B	X06A X06B X06C
03.03.48↔	01	B03A B03B B03C
	08	I10A I10B
	09	J11A J11B
	10	K09A K09B
	21A	W01A W01B W01C
	21B	X06A X06B X06C
03.03.4A↔	01	B03A B03B B03C
	08	I10A I10B
	09	J11A J11B
	10	K09A K09B
	21A	W01A W01B W01C
	21B	X06A X06B X06C
03.03.4B↔	01	B03A B03B B03C
	08	I10A I10B
	09	J11A J11B
	10	K09A K09B
	21A	W01A W01B W01C
	21B	X06A X06B X06C
03.04.11‡↔		EML
	01	B60A
03.04.12‡↔		EML
	01	B60A
03.04.21‡↔		EML
	01	B60A
03.04.22‡↔		EML
	01	B60A
03.04.23‡↔		EML
	01	B60A
03.04.24‡↔		EML
	01	B60A
03.04.25‡↔		EML
	01	B60A
03.04.26‡↔		EML
	01	B60A
03.04.31‡↔		EML
	01	B60A
03.04.32‡↔		EML
	01	B60A
03.04.33‡↔		EML
	01	B60A
03.04.34‡↔		EML
	01	B60A
03.04.35‡↔		EML
	01	B60A
03.04.36‡↔		EML
	01	B60A
03.05.11↔		BORP MBOR VAC
		VBOR
	01	B03A B03B B03C
	04	E36A E36B
	06	G12A G16A G38A
		G38B
	08	I10A I10B I10C
	09	J11A J11B
	10	K09A K09B
	21A	W01A W01B W01C
	21B	X06A X06B X06C
03.05.12↔		BORP MBOR VAC
		VBOR
	01	B03A B03B B03C
	04	E36A E36B
	06	G12A G16A G38A
		G38B
	08	I10A I10B I10C
	09	J11A J11B
	10	K09A K09B
	21A	W01A W01B W01C
	21B	X06A X06B X06C
03.05.13↔		BORP MBOR VAC
		VAC I VAC II VBOR
	01	B03A B03B B03C
	04	E36A E36B
	06	G12A G16A G38A
		G38B

PROC

PROC

CHOP	MDC	DRG
	08	I10A I10B
	09	J11A J11B
	10	K09A K09B
	21A	W01A W01B W01C
	21B	X06A X06B X06C
03.05.21↔		BORP MBOR VAC VAC I VAC II VBOR
	01	B03A B03B B03C
	04	E36A E36B
	06	G12A G16A G38A G38B
	08	I10A I10B I10C
	09	J11A J11B
	10	K09A K09B
	21A	W01A W01B W01C
	21B	X06A X06B X06C
03.05.22↔		BORP MBOR VAC VBOR
	01	B03A B03B B03C
	04	E36A E36B
	06	G12A G16A G38A G38B
	08	I10A I10B I10C
	09	J11A J11B
	10	K09A K09B
	21A	W01A W01B W01C
	21B	X06A X06B X06C
03.05.23↔		BORP MBOR VAC VAC I VAC II VBOR
	01	B03A B03B B03C
	04	E36A E36B
	06	G12A G16A G38A G38B
	08	I10A I10B
	09	J11A J11B
	10	K09A K09B
	21A	W01A W01B W01C
	21B	X06A X06B X06C
03.09↔		BORP MBOR VAC VBOR
	01	B03A B03B B03C
	04	E36A E36B
	06	G12A G16A G38A G38B
	08	I10A I10B I10C
	09	J11A J11B
	10	K09A K09B
	21A	W01A W01B W01C
	21B	X06A X06B X06C
03.1↔		BORP MBOR VAC VAC I VAC II VBOR
	01	B03A B03B B03C
	04	E36A E36B
	06	G12A G16A G38A G38B
	08	I10A I10B I10C
	21A	W01A W01B W01C
	21B	X06A X06B X06C
03.21↔		BORP MBOR VAC VAC I VAC II VBOR
	01	B03A B03B B03C
	04	E36A E36B
	06	G12A G16A G38A G38B
	07	H06Z
	21B	X06A X06B X06C
03.29↔		BORP MBOR VAC VAC I VAC II VBOR
	01	B03A B03B B03C
	04	E36A E36B
	06	G12A G16A G38A G38B
	07	H06Z
	21B	X06A X06B X06C
03.31‡↔		AKBB
	01	B60A
	15	P67C
	16	Q86A
03.32.09↔		BORP MBOR VAC VBOR
	01	B03A B03B B03C
	04	E36A E36B
	06	G12A G16A G38A G38B
	08	I10A I10B I10C
	21A	W01A W01B W01C
03.32.11↔	01	B03A B03B B03C
	08	I10A I10B I10C
	21A	W01A W01B W01C
03.32.12↔	01	B03A B03B B03C
	08	I10A I10B I10C
	21A	W01A W01B W01C
03.32.21↔		BORP MBOR VAC VAC I VAC II VBOR
	01	B03A B03B B03C
	04	E36A E36B
	06	G12A G16A G38A G38B
	08	I10A I10B I10C
	21A	W01A W01B W01C
03.32.22↔		BORP MBOR VAC VAC I VAC II VBOR
	01	B03A B03B B03C
	04	E36A E36B
	06	G12A G16A G38A G38B
	08	I10A I10B I10C
	21A	W01A W01B W01C
03.4X.10↔		BORP KORP MBOR MKOR VAC VAC I VAC II VBOR VKOR
	01	B03A B03B
	04	E36A E36B
	06	G12A G16A G38A G38B
	08	I10A I10B
	21A	W01A W01B W01C
	21B	X06A X06B X06C
03.4X.11↔		BORP KORP MBOR MKOR VAC VAC I VAC II VBOR VKOR
	01	B03A B03B
	04	E36A E36B
	06	G12A G16A G38A G38B
	08	I10A I10B
	21A	W01A W01B W01C
	21B	X06A X06B X06C
03.4X.12↔		BORP KORP MBOR MKOR VAC VAC I VAC II VBOR VKOR
	01	B03A B03B
	04	E36A E36B
	06	G12A G16A G38A G38B
	08	I10A I10B
	21A	W01A W01B W01C
	21B	X06A X06B X06C
03.4X.19↔		BORP KORP MBOR MKOR VAC VAC I VAC II VBOR VKOR
	01	B03A B03B
	04	E36A E36B
	06	G12A G16A G38A G38B
	08	I10A I10B I10C
	21A	W01A W01B W01C
	21B	X06A X06B X06C
03.4X.20↔		BORP KORP MBOR MKOR VAC VAC I VAC II VBOR VKOR
	01	B03A B03B
	04	E36A E36B
	06	G12A G16A G38A G38B
	08	I10A I10B
	21A	W01A W01B W01C
	21B	X06A X06B X06C
03.4X.21↔		BORP MBOR VAC VAC I VAC II VBOR
	01	B03A B03B
	04	E36A E36B
	06	G12A G16A G38A G38B
	08	I10A I10B I10C
	21A	W01A W01B W01C
	21B	X06A X06B X06C
03.4X.22↔		BORP MBOR VAC VAC I VAC II VBOR
	01	B03A B03B
	04	E36A E36B
	06	G12A G16A G38A G38B
	08	I10A I10B I10C
	21A	W01A W01B W01C
	21B	X06A X06B X06C
03.4X.29↔		BORP MBOR VAC VAC I VAC II VBOR
	01	B03A B03B
	04	E36A E36B
	06	G12A G16A G38A G38B
	08	I10A I10B I10C
	21A	W01A W01B W01C
	21B	X06A X06B X06C
03.4X.99↔		BORP MBOR VAC VAC I VAC II VBOR
	01	B03A B03B
	04	E36A E36B
	06	G12A G16A G38A G38B
	08	I10A I10B I10C
	21A	W01A W01B W01C
	21B	X06A X06B X06C
03.51↔		BORP KORP MBOR MKOR VAC VAC I VAC II VBOR VKOR
	01	B03A B03B B03C
	04	E36A E36B
	06	G12A G16A G38A G38B
	08	I10A I10B
	21A	W01A W01B W01C
03.52↔		BORP KORP MBOR MKOR VAC VAC I VAC II VBOR VKOR
	01	B03A B03B B03C
	04	E36A E36B
	06	G12A G16A G38A G38B

CHOP	MDC	DRG
	08	I10A I10B
	21A	W01A W01B W01C
03.59.10↔		BORP KORP MBOR MKOR VAC VAC I VAC II VBOR VKOR
	01	B03A B03B B03C
	04	E36A E36B
	06	G12A G16A G38A G38B
	08	I10A I10B
	21A	W01A W01B W01C
	21B	X06A X06B X06C
03.59.11↔		BORP KORP MBOR MKOR VAC VAC I VAC II VBOR VKOR
	01	B03A B03B B03C
	04	E36A E36B
	06	G12A G16A G38A G38B
	08	I10A I10B
	21A	W01A W01B W01C
	21B	X06A X06B X06C
03.59.12↔		BORP MBOR VAC VAC I VAC II VBOR
	01	B03A B03B B03C
	04	E36A E36B
	06	G12A G16A G38A G38B
	08	I10A I10B I10C
	21A	W01A W01B W01C
	21B	X06A X06B X06C
03.59.13↔		BORP MBOR VAC VAC I VAC II VBOR
	01	B03A B03B B03C
	04	E36A E36B
	06	G12A G16A G38A G38B
	08	I10A I10B I10C
	21A	W01A W01B W01C
	21B	X06A X06B X06C
03.59.99↔		BORP MBOR VAC VBOR
	01	B03A B03B B03C
	04	E36A E36B
	06	G12A G16A G38A G38B
	08	I10A I10B I10C
	21A	W01A W01B W01C
	21B	X06A X06B X06C
03.6↔		BORP MBOR VAC VAC I VAC II VBOR
	01	B03A B03B
	04	E36A E36B
	06	G12A G16A G38A G38B
	08	I10A I10B I10C
	21A	W01A W01B W01C
	21B	X06A X06B X06C
03.71↔		BORP KORP MBOR MKOR VAC VAC I VAC II VBOR VKOR
	01	B03A B03B B03C
	04	E36A E36B
	06	G12A G16A G38A G38B
03.72↔		BORP KORP MBOR MKOR VAC VAC I VAC II VBOR VKOR
	01	B03A B03B B03C
	04	E36A E36B
	06	G12A G16A G38A G38B
03.79↔		BORP KORP MBOR MKOR VAC VAC I VAC II VBOR VKOR
	01	B03A B03B B03C
	04	E36A E36B
	06	G12A G16A G38A G38B
	08	I10A I10B I10C
	21A	W01A W01B W01C
	21B	X06A X06B
03.91.21‡↔	01	B60A
	15	P67A P67B P67C
03.93.10↔		BORP MBOR VAC VAC I VAC II VBOR
	01	B21A B21B B21C B21D B21E B21F B21G
	04	E36A E36B
	06	G12A G16A G38A G38B
03.93.11↔		BORP MBOR VAC VAC I VAC II VBOR
	01	B21A B21B B21C B21D B21E B21F B21G
	04	E36A E36B
	06	G12A G16A G38A G38B
03.93.20↔		BORP MBOR VAC VAC I VAC II VBOR
	01	B03B B21A B21B B21C B21D B21E B21F
	04	E36A E36B
	06	G12A G16A G38A G38B
03.93.21↔		BORP MBOR VAC VAC I VAC II VBOR
	01	B03B B21A B21B B21C B21D B21E B21F
	04	E36A E36B
	06	G12A G16A G38A G38B
03.93.22↔		BORP MBOR VAC VAC I VAC II VBOR
	01	B03B B21A B21B B21C B21D B21E B21F
	04	E36A E36B
	06	G12A G16A G38A G38B
03.93.23↔		BORP MBOR VAC VAC I VAC II VBOR
	01	B03B B21A B21B B21C B21D B21E B21F
	04	E36A E36B
	06	G12A G16A G38A G38B
03.93.30↔		BORP MBOR VAC VAC I VAC II VBOR
	01	B21A B21B B21C B21D B21E B21F B21G
	04	E36A E36B
	06	G12A G16A G38A G38B
03.93.99↔		BORP MBOR VAC VAC I VAC II VBOR
	01	B21A B21B B21C B21D B21E B21F B21G
	04	E36A E36B
	06	G12A G16A G38A G38B
03.97↔		BORP KORP MBOR MKOR VAC VAC I VAC II VBOR VKOR
	01	B03A B03B B03C
	04	E36A E36B
	06	G12A G16A G38A G38B
	08	I10A I10B I10C
	21A	W01A W01B W01C
	21B	X06A X06B
03.98↔		BORP MBOR VAC VAC I VAC II VBOR
	01	B03A B03B B03C
	04	E36A E36B
	06	G12A G16A G38A G38B
	08	I10A I10B I10C
	21A	W01A W01B W01C
	21B	X06A X06B
03.99.09↔	01	B03A B03B B03C
	08	I10A I10B I10C
	21A	W01A W01B W01C
03.99.10↔	01	B03A B03B B03C
	08	I10A I10B I10C
	21A	W01A W01B W01C
03.99.19↔		BORP MBOR VAC VBOR
	01	B03A B03B B03C
	04	E36A E36B
	06	G12A G16A G38A G38B
	08	I10A I10B I10C
	21A	W01A W01B W01C
03.99.20↔		BORP MBOR VAC VAC I VAC II VBOR
	01	B03A B03B B03C
	04	E36A E36B
	06	G12A G16A G38A G38B
	08	I10A I10B I10C
	21A	W01A W01B W01C
	21B	X06A X06B X06C
03.99.21↔		BORP MBOR VAC VAC I VAC II VBOR
	01	B03A B03B B03C
	04	E36A E36B
	06	G12A G16A G38A G38B
	08	I10A I10B I10C
	21A	W01A W01B W01C
	21B	X06A X06B X06C
03.99.22↔		BORP MBOR VAC VBOR
	01	B03A B03B B03C
	04	E36A E36B
	06	G12A G16A G38A G38B
	08	I10A I10B I10C
	21A	W01A W01B W01C
	21B	X06A X06B X06C
03.99.29↔	01	B03A B03B B03C
	08	I10A I10B I10C

PROC

PROC

CHOP	MDC	DRG
	21A	W01A W01B W01C
	21B	X06A X06B X06C
03.99.30↔	01	B03A B03B B03C
	08	I10A I10B I10C
	21A	W01A W01B W01C
	21B	X06A X06B X06C
03.99.31↔	01	B03A B03B B03C
	08	I10A I10B I10C
	21A	W01A W01B W01C
	21B	X06A X06B X06C
03.99.32↔	01	B03A B03B B03C
	08	I10A I10B I10C
	21A	W01A W01B W01C
	21B	X06A X06B X06C
03.99.33↔	01	B03A B03B B03C
	08	I10A I10B I10C
	21A	W01A W01B W01C
	21B	X06A X06B X06C
03.99.34↔	01	B03A B03B B03C
	08	I10A I10B I10C
	21A	W01A W01B W01C
	21B	X06A X06B X06C
03.99.40↔		BORP MBOR VAC VBOR
	01	B03A B03B B03C
	04	E36A E36B
	06	G12A G16A G38A G38B
	08	I10A I10B I10C
	21A	W01A W01B W01C
	21B	X06A X06B X06C
03.9A.10↔		BORP KORP MBOR MKOR VAC VAC I VAC II VBOR VKOR
	01	B21A B21B B21C B21D B21E B21F
	04	E36A E36B
	06	G12A G16A G38A G38B
03.9A.11↔		BORP KORP MBOR MKOR VAC VAC I VAC II VBOR VKOR
	01	B21A B21B B21C B21D B21E B21F
	04	E36A E36B
	06	G12A G16A G38A G38B
03.9A.12↔		BORP KORP MBOR MKOR VAC VAC I VAC II VBOR VKOR
	01	B21A B21B B21C B21D B21E B21F
	04	E36A E36B
	06	G12A G16A G38A G38B
03.9A.13↔		BORP KORP MBOR MKOR VAC VAC I VAC II VBOR VKOR
	01	B21A B21B B21C B21D B21E B21F
	04	E36A E36B
	06	G12A G16A G38A G38B
03.9A.19↔		BORP KORP MBOR MKOR VAC VAC I VAC II VBOR VKOR
	01	B21A B21B B21C B21D B21E B21F
	04	E36A E36B
	06	G12A G16A G38A G38B
03.9A.21↔		BORP KORP MBOR MKOR VAC VAC I VAC II VBOR VKOR
	01	B21A B21B B21C B21D B21E B21F
	04	E36A E36B
	06	G12A G16A G38A G38B
	07	H33Z
	09	J02A J02B J08Z
	11	L33Z
	21B	X07A X07B
03.9A.31↔	01	B03A B03B B03C
	08	I23A I23B I23C
	11	L06A L06B
	12	M06Z M09A M09B M37Z
	13	N11A N11B
	21B	X06A X06B X06C
03.9A.32↔	01	B03A B03B B03C
	08	I23A I23B I23C
	11	L06A L06B
	12	M06Z M09A M09B M37Z
	13	N11A N11B
	21B	X06A X06B X06C
03.9B.10↔	01	B21A B21B B22Z
03.9B.11↔		BORP KORP MBOR MKOR VAC VAC I VAC II VBOR VKOR
	01	B21A B21B B22Z
	04	E36A E36B
	06	G12A G16A G38A G38B
03.9B.12↔		BORP KORP MBOR MKOR VAC VAC I VAC II VBOR VKOR
	01	B21A B21B B22Z
	04	E36A E36B
	06	G12A G16A G38A G38B
03.9B.13↔		BORP KORP MBOR MKOR VAC VAC I VAC II VBOR VKOR
	01	B21A B21B B22Z
	04	E36A E36B
	06	G12A G16A G38A G38B
03.9B.19↔		BORP KORP MBOR MKOR VAC VAC I VAC II VBOR VKOR
	01	B21A B21B B22Z
	04	E36A E36B
	06	G12A G16A G38A G38B
04.01.00↔		BORP KORP MBOR MKOR VAC VAC I VAC II VBOR VKOR
	01	B01A B02A B02B B20A B20B B20C
	03	D25A D25B
	04	E36A E36B
	06	G12A G16A G33Z G38A G38B G38C
	07	H33Z
	09	J02A J02B J08Z
	11	L33Z
	21B	X07A X07B
04.01.10↔		BORP KORP MBOR MKOR VAC VAC I VAC II VBOR VKOR
	01	B01A B02A B02B B20A B20B B20C
	03	D25A D25B
	04	E36A E36B
	06	G12A G16A G33Z G38A G38B G38C
	07	H33Z
	09	J02A J02B J08Z
	11	L33Z
	21B	X07A X07B
04.01.11↔		BORP KORP MBOR MKOR VAC VAC I VAC II VBOR VKOR
	01	B01A B02A B02B B20A B20B B20C
	03	D25A D25B
	04	E36A E36B
	06	G12A G16A G33Z G38A G38B G38C
	07	H33Z
	09	J02A J02B J08Z
	11	L33Z
	21B	X07A X07B
04.01.99↔		BORP KORP MBOR MKOR VAC VAC I VAC II VBOR VKOR
	01	B01A B02A B02B B20A B20B B20C
	03	D25A D25B
	04	E36A E36B
	06	G12A G16A G33Z G38A G38B G38C
	07	H33Z
	09	J02A J02B J08Z
	11	L33Z
	21B	X07A X07B
04.02↔		BORP KORP MBOR MKOR VAC VAC I VAC II VBOR VKOR
	01	B17A B17B
	04	E36A E36B
	06	G12A G16A G38A G38B
	21B	X06A X06B X06C
04.03.00↔	01	B17A B17B
	08	I02A I02B I02C I08A I08B I13A I13B I28A I28B
	21B	X06A X06B X06C
04.03.10↔	01	B17A B17B
	08	I02A I02B I02C I08A I08B I13A I13B I28A I28B
	21B	X06A X06B X06C
04.03.11↔	01	B17A B17B
	08	I02A I02B I02C I08A I08B I13A I13B I28A I28B
	21B	X06A X06B X06C
04.03.20↔	01	B17A B17B
	08	I02A I02B I02C I08A I08B I13A I13B I28A I28B
	21B	X06A X06B X06C
04.03.30↔	01	B17A B17B
	08	I02A I02B I02C I08A I08B I13A I13B I28A I28B
	21B	X06A X06B X06C
04.03.31↔	01	B17A B17B
	08	I02A I02B I02C I08A I08B I13A

CHOP	MDC	DRG
		I13B I28A I28B
	21B	X06A X06B X06C
04.03.32↔	01	B17A B17B
	08	I02A I02B I02C
		I08A I08B I13A
		I13B I28A I28B
	21B	X06A X06B X06C
04.03.33↔	01	B17A B17B
	08	I02A I02B I02C
		I08A I08B I13A
		I13B I28A I28B
	21B	X06A X06B X06C
04.03.99↔	01	B17A B17B
	08	I02A I02B I02C
		I08A I08B I13A
		I13B I28A I28B
	21B	X06A X06B X06C
04.04.00↔	01	B17A B17B
	08	I02A I02B I02C
		I08A I08B I13A
		I13B I28A I28B
	21B	X06A X06B X06C
04.04.10↔	01	B17A B17B
	08	I02A I02B I02C
		I08A I08B I13A
		I13B I28A I28B
	21B	X06A X06B X06C
04.04.11↔	01	B17A B17B
	08	I02A I02B I02C
		I08A I08B I13A
		I13B I28A I28B
	21B	X06A X06B X06C
04.04.20↔	01	B17A B17B
	08	I02A I02B I02C
		I08A I08B I13A
		I13B I28A I28B
	21B	X06A X06B X06C
04.04.30↔	01	B17A B17B
	08	I02A I02B I02C
		I08A I08B I13A
		I13B I28A I28B
	21B	X06A X06B X06C
04.04.31↔	01	B17A B17B
	08	I02A I02B I02C
		I08A I08B I13A
		I13B I28A I28B
	21B	X06A X06B X06C
04.04.32↔	01	B17A B17B
	08	I02A I02B I02C
		I08A I08B I13A
		I13B I28A I28B
	21B	X06A X06B X06C
04.04.33↔	01	B17A B17B
	08	I02A I02B I02C
		I08A I08B I13A
		I13B I28A I28B
	21B	X06A X06B X06C
04.04.99↔	01	B17A B17B
	08	I02A I02B I02C
		I08A I08B I13A
		I13B I28A I28B
	21B	X06A X06B X06C
04.05.00↔		BORP KORP MBOR
		MKOR VAC VAC I
		VAC II VBOR VKOR
	01	B17A B17B
	04	E36A E36B
	06	G12A G16A G38A
		G38B
	21B	X06A X06B X06C
04.05.10↔		BORP KORP MBOR
		MKOR VAC VAC I
		VAC II VBOR VKOR
	01	B17A B17B
	04	E36A E36B
	06	G12A G16A G38A
		G38B
	21B	X06A X06B X06C
04.05.20↔		BORP MBOR VAC
		VAC I VAC II VBOR
	01	B17A B17B
	04	E36A E36B
	06	G12A G16A G38A
		G38B
	21B	X06A X06B X06C
04.05.99↔		BORP MBOR VAC
		VAC I VAC II VBOR
	01	B17A B17B
	04	E36A E36B
	06	G12A G16A G38A
		G38B
	21B	X06A X06B X06C
04.06.00↔	01	B17A B17B
	08	I02A I02B I02C
		I08A I08B I13A
		I13B I28A I28B
	21B	X06A X06B X06C
04.06.10↔		BORP MBOR VAC
		VAC I VAC II VBOR
	01	B17A B17B
	04	E36A E36B
	06	G12A G16A G38A
		G38B
	08	I02A I02B I02C
		I08A I08B I13A
		I13B I28A I28B
	21B	X06A X06B X06C
04.06.20↔		BORP MBOR VAC
		VAC I VAC II VBOR
	01	B17A B17B
	04	E36A E36B
	06	G12A G16A G38A
		G38B
	08	I02A I02B I02C
		I08A I08B I13A
		I13B I28A I28B
	21B	X06A X06B X06C
04.06.99↔	01	B17A B17B
	08	I02A I02B I02C
		I08A I08B I13A
		I13B I28A I28B
	21B	X06A X06B X06C
04.07.00↔	01	B17A B17B
	08	I02A I02B I02C
		I08A I08B I13A
		I13B I28A I28B
	21B	X06A X06B X06C
04.07.10↔		BORP MBOR VAC
		VAC I VAC II VBOR
	01	B17A B17B
	04	E36A E36B
	06	G12A G16A G38A
		G38B
	08	I02A I02B I02C
		I08A I08B I13A
		I13B I28A I28B
	21B	X06A X06B X06C
04.07.11↔		BORP MBOR VAC
		VAC I VAC II VBOR
	01	B17A B17B
	04	E36A E36B
	06	G12A G16A G38A
		G38B
	08	I02A I02B I02C
		I08A I08B I13A
		I13B I28A I28B
	21B	X06A X06B X06C
04.07.20↔		BORP MBOR VAC
		VAC I VAC II VBOR
	01	B09A B09B B09C
		B09D B17A B17B
	04	E36A E36B
	06	G12A G16A G38A
		G38B
	08	I02A I02B I02C
		I08A I08B I13A
		I13B I28A I28B
	21B	X06A X06B X06C
04.07.30↔		BORP MBOR VAC
		VAC I VAC II VBOR
	01	B17A B17B
	04	E36A E36B
	06	G12A G16A G38A
		G38B
	08	I02A I02B I02C
		I08A I08B I13A
		I13B I28A I28B
	21B	X06A X06B X06C
04.07.40↔		BORP MBOR VAC
		VAC I VAC II VBOR
	01	B17A B17B
	04	E36A E36B
	06	G12A G16A G38A
		G38B
	08	I02A I02B I02C
		I08A I08B I13A
		I13B I28A I28B
	09	J11A J11B
	21B	X06A X06B X06C
04.07.41↔		BORP MBOR VAC
		VAC I VAC II VBOR
	01	B17A B17B
	04	E36A E36B
	06	G12A G16A G38A
		G38B
	08	I02A I02B I02C
		I08A I08B I13A
		I13B I28A I28B
	09	J11A J11B
	21B	X06A X06B X06C
04.07.42↔		BORP MBOR VAC
		VAC I VAC II VBOR
	01	B17A B17B
	04	E36A E36B
	06	G12A G16A G38A
		G38B
	08	I02A I02B I02C
		I08A I08B I13A
		I13B I28A I28B
	09	J11A J11B
	21B	X06A X06B X06C
04.07.43↔		BORP MBOR VAC
		VAC I VAC II VBOR
	01	B17A B17B
	04	E36A E36B
	06	G12A G16A G38A
		G38B
	08	I02A I02B I02C
		I08A I08B I13A
		I13B I28A I28B

PROC

PROC

CHOP	MDC	DRG
	09	J11A J11B
	21B	X06A X06B X06C
04.07.99↔	01	B17A B17B
	08	I02A I02B I02C I08A I08B I13A I13B I28A I28B
	09	J11A J11B
	21B	X06A X06B X06C
04.08.00↔		BORP KORP MBOR MKOR VAC VAC I VAC II VBOR VKOR
	01	B17A B17B
	04	E36A E36B
	06	G12A G16A G38A G38B
	08	I02A I02B I02C I08A I08B I13A I13B I28A I28B
	21B	X06A X06B X06C
04.08.10↔		BORP KORP MBOR MKOR VAC VAC I VAC II VBOR VKOR
	01	B17A B17B
	04	E36A E36B
	06	G12A G16A G38A G38B
	08	I02A I02B I02C I08A I08B I13A I13B I28A I28B
	21B	X06A X06B X06C
04.08.99↔		BORP KORP MBOR MKOR VAC VAC I VAC II VBOR VKOR
	01	B17A B17B
	02	C14Z
	04	E36A E36B
	06	G12A G16A G38A G38B
	08	I02A I02B I02C I08A I08B I13A I13B I28A I28B
	21B	X06A X06B X06C
04.11.10↔	01	B17A B17B
	08	I28A I28B
	21B	X06A X06B X06C
04.11.20↔	01	B17A B17B
	08	I28A I28B
	21B	X06A X06B X06C
04.11.30‡↔		AKBB
	01	B60A
	16	Q86A
04.11.31‡↔		AKBB
	01	B60A
	16	Q86A
04.11.39‡↔		AKBB
	01	B60A
	16	Q86A
04.11.40‡↔		AKBB
	01	B60A
	16	Q86A
04.11.99‡↔		AKBB
	01	B60A
	16	Q86A
04.12.00↔	01	B17A B17B
	08	I28A I28B
	21B	X06A X06B X06C
04.12.10↔	01	B17A B17B
	08	I28A I28B
	21B	X06A X06B X06C
04.12.20↔	01	B17A B17B

CHOP	MDC	DRG
	08	I28A I28B
	21B	X06A X06B X06C
04.12.30↔	01	B17A B17B
	08	I28A I28B
	21B	X06A X06B X06C
04.12.31↔	01	B17A B17B
	08	I28A I28B
	21B	X06A X06B X06C
04.12.32↔	01	B17A B17B
	08	I28A I28B
	21B	X06A X06B X06C
04.12.33↔	01	B17A B17B
	08	I28A I28B
	21B	X06A X06B X06C
04.12.34↔	01	B17A B17B
	08	I28A I28B
	21B	X06A X06B X06C
04.12.35↔	01	B17A B17B
	08	I28A I28B
	21B	X06A X06B X06C
04.12.99↔	01	B17A B17B
	08	I28A I28B
	21B	X06A X06B X06C
04.2X.00↔	01	B17A B17B
	08	I02A I02B I02C I08A I08B I13A I13B I28A I28B
	21B	X06A X06B X06C
04.2X.10↔		BORP MBOR VAC VAC I VAC II VBOR
	01	B17A B17B
	04	E36A E36B
	06	G12A G16A G38A G38B
	08	I02A I02B I02C I08A I08B I13A I13B I28A I28B
	21B	X06A X06B X06C
04.2X.20↔		BORP MBOR VAC VAC I VAC II VBOR
	01	B17A B17B
	04	E36A E36B
	06	G12A G16A G38A G38B
	08	I02A I02B I02C I08A I08B I13A I13B I28A I28B
	21B	X06A X06B X06C
04.2X.30↔		BORP MBOR VAC VAC I VAC II VBOR
	01	B17A B17B
	04	E36A E36B
	06	G12A G16A G38A G38B
	08	I02A I02B I02C I08A I08B I13A I13B I28A I28B
	21B	X06A X06B X06C
04.2X.31↔		BORP MBOR VAC VAC I VAC II VBOR
	01	B17A B17B
	04	E36A E36B
	06	G12A G16A G38A G38B
	08	I02A I02B I02C I08A I08B I13A I13B I28A I28B
	21B	X06A X06B X06C
04.2X.32↔		BORP MBOR VAC VAC I VAC II VBOR

CHOP	MDC	DRG
	01	B17A B17B
	04	E36A E36B
	06	G12A G16A G38A G38B
	08	I02A I02B I02C I08A I08B I13A I13B I28A I28B
	21B	X06A X06B X06C
04.2X.33↔		BORP MBOR VAC VAC I VAC II VBOR
	01	B17A B17B
	04	E36A E36B
	06	G12A G16A G38A G38B
	08	I02A I02B I02C I08A I08B I13A I13B I28A I28B
	21B	X06A X06B X06C
04.2X.34↔		BORP MBOR VAC VAC I VAC II VBOR
	01	B17A B17B
	04	E36A E36B
	06	G12A G16A G38A G38B
	08	I02A I02B I02C I08A I08B I13A I13B I28A I28B
	21B	X06A X06B X06C
04.2X.39↔		BORP MBOR VAC VAC I VAC II VBOR
	01	B17A B17B
	04	E36A E36B
	06	G12A G16A G38A G38B
	08	I02A I02B I02C I08A I08B I13A I13B I28A I28B
	21B	X06A X06B X06C
04.2X.99↔		BORP MBOR VAC VAC I VAC II VBOR
	01	B17A B17B
	04	E36A E36B
	06	G12A G16A G38A G38B
	08	I02A I02B I02C I08A I08B I13A I13B I28A I28B
	21B	X06A X06B X06C
04.3X.00↔		BORP MBOR VAC VAC I VAC II VBOR
	01	B17A B17B
	04	E36A E36B
	06	G12A G16A G38A G38B
	08	I02A I02B I02C I08A I08B I13A I13B
	21B	X06A X06B
04.3X.10↔		BORP MBOR VAC VAC I VAC II VBOR
	01	B17A B17B
	04	E36A E36B
	06	G12A G16A G38A G38B
	08	I02A I02B I02C I08A I08B I13A I13B
	21B	X06A X06B
04.3X.11↔		BORP MBOR VAC VAC I VAC II VBOR

CHOP	MDC	DRG
	01	B17A B17B
	04	E36A E36B
	06	G12A G16A G38A G38B
	08	I02A I02B I02C I08A I08B I13A I13B
	21B	X06A X06B
04.3X.12↔		BORP MBOR VAC VAC I VAC II VBOR
	01	B17A B17B
	04	E36A E36B
	06	G12A G16A G38A G38B
	08	I02A I02B I02C I08A I08B I13A I13B
	21B	X06A X06B
04.3X.13↔		BORP MBOR VAC VAC I VAC II VBOR
	01	B17A B17B
	04	E36A E36B
	06	G12A G16A G38A G38B
	08	I02A I02B I02C I08A I08B I13A I13B
	21B	X06A X06B
04.3X.14↔		BORP MBOR VAC VAC I VAC II VBOR
	01	B17A B17B
	04	E36A E36B
	06	G12A G16A G38A G38B
	08	I02A I02B I02C I08A I08B I13A I13B
	21B	X06A X06B
04.3X.15↔		BORP MBOR VAC VAC I VAC II VBOR
	01	B17A B17B
	04	E36A E36B
	06	G12A G16A G38A G38B
	08	I02A I02B I02C I08A I08B I13A I13B
	21B	X06A X06B
04.3X.16↔		BORP MBOR VAC VAC I VAC II VBOR
	01	B17A B17B
	04	E36A E36B
	06	G12A G16A G38A G38B
	08	I02A I02B I02C I08A I08B I13A I13B
	21B	X06A X06B
04.3X.17↔		BORP MBOR VAC VAC I VAC II VBOR
	01	B17A B17B
	04	E36A E36B
	06	G12A G16A G38A G38B
	08	I02A I02B I02C I08A I08B I13A I13B
	21B	X06A X06B
04.3X.19↔		BORP MBOR VAC VAC I VAC II VBOR

CHOP	MDC	DRG
	01	B17A B17B
	04	E36A E36B
	06	G12A G16A G38A G38B
	08	I02A I02B I02C I08A I08B I13A I13B
	21B	X06A X06B
04.3X.20↔		BORP MBOR VAC VAC I VAC II VBOR
	01	B17A B17B
	04	E36A E36B
	06	G12A G16A G38A G38B
	08	I02A I02B I02C I08A I08B I13A I13B
	21B	X06A X06B
04.3X.21↔		BORP MBOR VAC VAC I VAC II VBOR
	01	B17A B17B
	04	E36A E36B
	06	G12A G16A G38A G38B
	08	I02A I02B I02C I08A I08B I13A I13B
	21B	X06A X06B
04.3X.22↔		BORP MBOR VAC VAC I VAC II VBOR
	01	B17A B17B
	04	E36A E36B
	06	G12A G16A G38A G38B
	08	I02A I02B I02C I08A I08B I13A I13B
	21B	X06A X06B
04.3X.23↔		BORP MBOR VAC VAC I VAC II VBOR
	01	B17A B17B
	04	E36A E36B
	06	G12A G16A G38A G38B
	08	I02A I02B I02C I08A I08B I13A I13B
	21B	X06A X06B
04.3X.24↔		BORP MBOR VAC VAC I VAC II VBOR
	01	B17A B17B
	04	E36A E36B
	06	G12A G16A G38A G38B
	08	I02A I02B I02C I08A I08B I13A I13B
	21B	X06A X06B
04.3X.25↔		BORP MBOR VAC VAC I VAC II VBOR
	01	B17A B17B
	04	E36A E36B
	06	G12A G16A G38A G38B
	08	I02A I02B I02C I08A I08B I13A I13B
	21B	X06A X06B
04.3X.26↔		BORP MBOR VAC VAC I VAC II VBOR

CHOP	MDC	DRG
	01	B17A B17B
	04	E36A E36B
	06	G12A G16A G38A G38B
	08	I02A I02B I02C I08A I08B I13A I13B
	21B	X06A X06B
04.3X.27↔		BORP MBOR VAC VAC I VAC II VBOR
	01	B17A B17B
	04	E36A E36B
	06	G12A G16A G38A G38B
	08	I02A I02B I02C I08A I08B I13A I13B
	21B	X06A X06B
04.3X.29↔		BORP MBOR VAC VAC I VAC II VBOR
	01	B17A B17B
	04	E36A E36B
	06	G12A G16A G38A G38B
	08	I02A I02B I02C I08A I08B I13A I13B
	21B	X06A X06B
04.3X.30↔		BORP MBOR VAC VAC I VAC II VBOR
	01	B17A B17B
	04	E36A E36B
	06	G12A G16A G38A G38B
	08	I02A I02B I02C I08A I08B I13A I13B
	21B	X06A X06B
04.3X.31↔		BORP MBOR VAC VAC I VAC II VBOR
	01	B17A B17B
	04	E36A E36B
	06	G12A G16A G38A G38B
	08	I02A I02B I02C I08A I08B I13A I13B
	21B	X06A X06B
04.3X.32↔		BORP MBOR VAC VAC I VAC II VBOR
	01	B17A B17B
	04	E36A E36B
	06	G12A G16A G38A G38B
	08	I02A I02B I02C I08A I08B I13A I13B
	21B	X06A X06B
04.3X.33↔		BORP MBOR VAC VAC I VAC II VBOR
	01	B17A B17B
	04	E36A E36B
	06	G12A G16A G38A G38B
	08	I02A I02B I02C I08A I08B I13A I13B
	21B	X06A X06B
04.3X.34↔		BORP MBOR VAC VAC I VAC II VBOR

PROC

CHOP	MDC	DRG
	01	B17A B17B
	04	E36A E36B
	06	G12A G16A G38A G38B
	08	I02A I02B I02C I08A I08B I13A I13B
	21B	X06A X06B
04.3X.35↔		BORP MBOR VAC VAC I VAC II VBOR
	01	B17A B17B
	04	E36A E36B
	06	G12A G16A G38A G38B
	08	I02A I02B I02C I08A I08B I13A I13B
	21B	X06A X06B
04.3X.36↔		BORP MBOR VAC VAC I VAC II VBOR
	01	B17A B17B
	04	E36A E36B
	06	G12A G16A G38A G38B
	08	I02A I02B I02C I08A I08B I13A I13B
	21B	X06A X06B
04.3X.37↔		BORP MBOR VAC VAC I VAC II VBOR
	01	B17A B17B
	04	E36A E36B
	06	G12A G16A G38A G38B
	08	I02A I02B I02C I08A I08B I13A I13B
	21B	X06A X06B
04.3X.39↔		BORP MBOR VAC VAC I VAC II VBOR
	01	B17A B17B
	04	E36A E36B
	06	G12A G16A G38A G38B
	08	I02A I02B I02C I08A I08B I13A I13B
	21B	X06A X06B
04.3X.40↔		BORP MBOR VAC VAC I VAC II VBOR
	01	B17A B17B
	04	E36A E36B
	06	G12A G16A G38A G38B
	08	I02A I02B I02C I08A I08B I13A I13B
	21B	X06A X06B
04.3X.41↔		BORP MBOR VAC VAC I VAC II VBOR
	01	B17A B17B
	04	E36A E36B
	06	G12A G16A G38A G38B
	08	I02A I02B I02C I08A I08B I13A I13B
	21B	X06A X06B
04.3X.42↔		BORP MBOR VAC VAC I VAC II VBOR
	01	B17A B17B
	04	E36A E36B
	06	G12A G16A G38A G38B
	08	I02A I02B I02C I08A I08B I13A I13B
	21B	X06A X06B
04.3X.43↔		BORP MBOR VAC VAC I VAC II VBOR
	01	B17A B17B
	04	E36A E36B
	06	G12A G16A G38A G38B
	08	I02A I02B I02C I08A I08B I13A I13B
	21B	X06A X06B
04.3X.44↔		BORP MBOR VAC VAC I VAC II VBOR
	01	B17A B17B
	04	E36A E36B
	06	G12A G16A G38A G38B
	08	I02A I02B I02C I08A I08B I13A I13B
	21B	X06A X06B
04.3X.45↔		BORP MBOR VAC VAC I VAC II VBOR
	01	B17A B17B
	04	E36A E36B
	06	G12A G16A G38A G38B
	08	I02A I02B I02C I08A I08B I13A I13B
	21B	X06A X06B
04.3X.46↔		BORP MBOR VAC VAC I VAC II VBOR
	01	B17A B17B
	04	E36A E36B
	06	G12A G16A G38A G38B
	08	I02A I02B I02C I08A I08B I13A I13B
	21B	X06A X06B
04.3X.47↔		BORP MBOR VAC VAC I VAC II VBOR
	01	B17A B17B
	04	E36A E36B
	06	G12A G16A G38A G38B
	08	I02A I02B I02C I08A I08B I13A I13B
	21B	X06A X06B
04.3X.49↔		BORP MBOR VAC VAC I VAC II VBOR
	01	B17A B17B
	04	E36A E36B
	06	G12A G16A G38A G38B
	08	I02A I02B I02C I08A I08B I13A I13B
	21B	X06A X06B
04.3X.99↔		BORP MBOR VAC VAC I VAC II VBOR
	01	B17A B17B
	04	E36A E36B
	06	G12A G16A G38A G38B
	08	I02A I02B I02C I08A I08B I13A I13B
	21B	X06A X06B
04.41↔		BORP KORP MBOR MKOR VAC VAC I VAC II VBOR VKOR
	01	B01A B02A B02B B20A B20B B20C
	04	E36A E36B
	06	G12A G16A G33Z G38A G38B G38C
	07	H33Z
	11	L33Z
	21A	W01A W01B W01C
	21B	X06A X06B X06C X07A X07B
04.42.00↔		BORP MBOR VAC VAC I VAC II VBOR
	01	B17A B17B
	04	E36A E36B
	06	G12A G16A G38A G38B
	08	I02A I02B I02C I08A I08B I13A I13B I28A I28B I28C
	21B	X06A X06B
04.42.10↔		BORP MBOR VAC VAC I VAC II VBOR
	01	B01A B20A B20B B20C B20D
	04	E36A E36B
	06	G12A G16A G38A G38B
	08	I02A I02B I02C I08A I08B I13A I13B I28A I28B I28C
	21B	X06A X06B
04.42.20↔		BORP MBOR VAC VAC I VAC II VBOR
	01	B17A B17B
	04	E36A E36B
	06	G12A G16A G38A G38B
	08	I02A I02B I02C I08A I08B I13A I13B I28A I28B I28C
	21B	X06A X06B
04.42.99↔		BORP MBOR VAC VAC I VAC II VBOR
	01	B17A B17B
	04	E36A E36B
	06	G12A G16A G38A G38B
	08	I02A I02B I02C I08A I08B I13A I13B I28A I28B I28C
	21B	X06A X06B
04.43.00↔	01	B05Z
	08	I02A I02B I02C I08A I08B I13A I13B I32A I32B

CHOP	MDC	DRG
		I32C I32D I32E
		I32F
	10	K09A K09B
	21B	X05Z
04.43.10↔	01	B05Z
	08	I02A I02B I02C
		I08A I08B I13A
		I13B I32A I32B
		I32C I32D I32E
		I32F
	10	K09A K09B
	21B	X05Z
04.43.99↔	01	B05Z
	08	I02A I02B I02C
		I08A I08B I13A
		I13B I32A I32B
		I32C I32D I32E
		I32F
	10	K09A K09B
	21B	X05Z
04.44↔	01	B05Z
	08	I02A I02B I02C
		I08A I08B I13A
		I13B I20A I20B
		I20C I20D I20E
		I20F I20G
	21B	X04Z
04.49.00↔		BORP MBOR VAC
		VAC I VAC II VBOR
	01	B17A B17B
	04	E36A E36B
	05	F04Z F13A F13B
		F13C
	06	G12A G16A G38A
		G38B
	08	I02A I02B I02C
		I08A I08B I13A
		I13B I28A I28B
		I28C
	09	J02A J02B J03A
		J03B J04Z J11A
		J11B
	10	K09A K09B
	21B	X04Z X05Z X06A
		X06B
04.49.10↔		BORP MBOR VAC
		VAC I VAC II VBOR
	01	B17A B17B
	04	E36A E36B
	05	F04Z F13A F13B
		F13C
	06	G12A G16A G38A
		G38B
	08	I02A I02B I02C
		I08A I08B I13A
		I13B I28A I28B
		I28C
	09	J02A J02B J03A
		J03B J04Z J11A
		J11B
	10	K09A K09B
	21B	X04Z X05Z X06A
		X06B
04.49.11↔		BORP MBOR VAC
		VAC I VAC II VBOR
	01	B17A B17B
	04	E36A E36B
	05	F04Z F13A F13B
		F13C
	06	G12A G16A G38A
		G38B
	08	I02A I02B I02C
		I08A I08B I13A
		I13B I28A I28B
		I28C
	09	J02A J02B J03A
		J03B J04Z J11A
		J11B
	10	K09A K09B
	21B	X04Z X05Z X06A
		X06B
04.49.12↔		BORP MBOR VAC
		VAC I VAC II VBOR
	01	B17A B17B
	04	E36A E36B
	05	F04Z F13A F13B
		F13C
	06	G12A G16A G38A
		G38B
	08	I02A I02B I02C
		I08A I08B I13A
		I13B I28A I28B
		I28C
	09	J02A J02B J03A
		J03B J04Z J11A
		J11B
	10	K09A K09B
	21B	X04Z X05Z X06A
		X06B
04.49.13↔		BORP MBOR VAC
		VAC I VAC II VBOR
	01	B17A B17B
	04	E36A E36B
	05	F04Z F13A F13B
		F13C
	06	G12A G16A G38A
		G38B
	08	I02A I02B I02C
		I08A I08B I13A
		I13B I32A I32B
		I32C I32D I32E
		I32F
	09	J02A J02B J03A
		J03B J04Z J11A
		J11B
	10	K09A K09B
	21B	X04Z X05Z X06A
		X06B
04.49.14↔		BORP MBOR VAC
		VAC I VAC II VBOR
	01	B17A B17B
	04	E36A E36B
	05	F04Z F13A F13B
		F13C
	06	G12A G16A G38A
		G38B
	08	I02A I02B I02C
		I08A I08B I13A
		I13B I28A I28B
		I28C
	09	J02A J02B J03A
		J03B J04Z J11A
		J11B
	10	K09A K09B
	21B	X04Z X05Z X06A
		X06B
04.49.15↔		BORP MBOR VAC
		VAC I VAC II VBOR
	01	B17A B17B
	04	E36A E36B
	05	F04Z F13A F13B
		F13C
	06	G12A G16A G38A
		G38B
	08	I02A I02B I02C
		I08A I08B I13A
		I13B I28A I28B
		I28C
	09	J02A J02B J03A
		J03B J04Z J11A
		J11B
	10	K09A K09B
	21B	X04Z X05Z X06A
		X06B
04.49.16↔		BORP MBOR VAC
		VAC I VAC II VBOR
	01	B17A B17B
	04	E36A E36B
	05	F04Z F13A F13B
		F13C
	06	G12A G16A G38A
		G38B
	08	I02A I02B I02C
		I08A I08B I13A
		I13B I28A I28B
		I28C
	09	J02A J02B J03A
		J03B J04Z J11A
		J11B
	10	K09A K09B
	21B	X04Z X05Z X06A
		X06B
04.49.99↔		BORP MBOR VAC
		VAC I VAC II VBOR
	01	B17A B17B
	04	E36A E36B
	05	F04Z F13A F13B
		F13C
	06	G12A G16A G38A
		G38B
	08	I02A I02B I02C
		I08A I08B I13A
		I13B I28A I28B
		I28C
	09	J02A J02B J03A
		J03B J04Z J11A
		J11B
	10	K09A K09B
	21B	X04Z X05Z X06A
		X06B
04.51.00↔		BORP MBOR VAC
		VAC I VAC II VBOR
	01	B17A B17B
	04	E36A E36B
	06	G12A G16A G38A
		G38B
	08	I02A I02B I02C
		I08A I08B I13A
		I13B
	21B	X06A X06B X07A
		X07B
04.51.09↔		BORP KORP MBOR
		MKOR VAC VAC I
		VAC II VBOR VKOR
	01	B17A B17B
	04	E36A E36B
	06	G12A G16A G38A
		G38B
	08	I02A I02B I02C
		I08A I08B I13A

PROC

PROC

CHOP	MDC	DRG
		I13B
	21B	X06A X06B X07A X07B
04.51.10↔		BORP KORP MBOR MKOR VAC VAC I VAC II VBOR VKOR
	01	B17A
	04	E36A E36B
	06	G12A G16A G38A G38B
	08	I02A I02B I02C I08A I08B I13A I13B
	21B	X06A X06B X07A X07B
04.51.11↔		BORP KORP MBOR MKOR VAC VAC I VAC II VBOR VKOR
	01	B17A
	04	E36A E36B
	06	G12A G16A G38A G38B
	08	I02A I02B I02C I08A I08B I13A I13B
	21B	X06A X06B X07A X07B
04.51.12↔		BORP KORP MBOR MKOR VAC VAC I VAC II VBOR VKOR
	01	B17A
	04	E36A E36B
	06	G12A G16A G38A G38B
	08	I02A I02B I02C I08A I08B I13A I13B
	21B	X06A X06B X07A X07B
04.51.13↔		BORP KORP MBOR MKOR VAC VAC I VAC II VBOR VKOR
	01	B17A
	04	E36A E36B
	06	G12A G16A G38A G38B
	08	I02A I02B I02C I08A I08B I13A I13B
	21B	X06A X06B X07A X07B
04.51.19↔		BORP KORP MBOR MKOR VAC VAC I VAC II VBOR VKOR
	01	B17A B17B
	04	E36A E36B
	06	G12A G16A G38A G38B
	08	I02A I02B I02C I08A I08B I13A I13B
	21B	X06A X06B X07A X07B
04.6X.00↔		BORP KORP MBOR MKOR VAC VAC I VAC II VBOR VKOR
	01	B17A B17B
	04	E36A E36B
	06	G12A G16A G38A G38B
	08	I02A I02B I02C I08A I08B I13A I13B I28A I28B
	21B	X06A X06B
04.6X.10↔		BORP KORP MBOR MKOR VAC VAC I VAC II VBOR VKOR
	01	B17A B17B
	04	E36A E36B
	06	G12A G16A G38A G38B
	08	I02A I02B I02C I08A I08B I13A I13B I28A I28B
	21B	X06A X06B
04.6X.11↔		BORP KORP MBOR MKOR VAC VAC I VAC II VBOR VKOR
	01	B17A B17B
	04	E36A E36B
	06	G12A G16A G38A G38B
	08	I02A I02B I02C I08A I08B I13A I13B I28A I28B
	21B	X06A X06B
04.6X.12↔		BORP KORP MBOR MKOR VAC VAC I VAC II VBOR VKOR
	01	B17A B17B
	04	E36A E36B
	06	G12A G16A G38A G38B
	08	I02A I02B I02C I08A I08B I13A I13B I28A I28B
	21B	X06A X06B
04.6X.20↔		BORP KORP MBOR MKOR VAC VAC I VAC II VBOR VKOR
	01	B17A B17B
	04	E36A E36B
	06	G12A G16A G38A G38B
	08	I02A I02B I02C I08A I08B I13A I13B I28A I28B
	21B	X06A X06B
04.6X.21↔		BORP KORP MBOR MKOR VAC VAC I VAC II VBOR VKOR
	01	B17A B17B
	04	E36A E36B
	06	G12A G16A G38A G38B
	08	I02A I02B I02C I08A I08B I13A I13B I28A I28B
	21B	X06A X06B
04.6X.22↔		BORP KORP MBOR MKOR VAC VAC I VAC II VBOR VKOR
	01	B17A B17B
	04	E36A E36B
	06	G12A G16A G38A G38B
	08	I02A I02B I02C I08A I08B I13A I13B I28A I28B
	21B	X06A X06B
04.6X.23↔		BORP KORP MBOR MKOR VAC VAC I VAC II VBOR VKOR
	01	B17A B17B
	04	E36A E36B
	06	G12A G16A G38A G38B
	08	I02A I02B I02C I08A I08B I13A I13B I28A I28B
	21B	X06A X06B
04.6X.30↔		BORP KORP MBOR MKOR VAC VAC I VAC II VBOR VKOR
	01	B17A B17B
	04	E36A E36B
	06	G12A G16A G38A G38B
	08	I02A I02B I02C I08A I08B I13A I13B I28A I28B
	21B	X06A X06B
04.6X.31↔		BORP KORP MBOR MKOR VAC VAC I VAC II VBOR VKOR
	01	B17A B17B
	04	E36A E36B
	06	G12A G16A G38A G38B
	08	I02A I02B I02C I08A I08B I13A I13B I28A I28B
	21B	X06A X06B
04.6X.40↔		BORP KORP MBOR MKOR VAC VAC I VAC II VBOR VKOR
	01	B17A B17B
	04	E36A E36B
	06	G12A G16A G38A G38B
	08	I02A I02B I02C I08A I08B I13A I13B I28A I28B
	21B	X06A X06B
04.6X.41↔		BORP KORP MBOR MKOR VAC VAC I VAC II VBOR VKOR
	01	B17A B17B
	04	E36A E36B
	06	G12A G16A G38A G38B
	08	I02A I02B I02C I08A I08B I13A I13B I28A I28B
	21B	X06A X06B
04.6X.42↔		BORP KORP MBOR MKOR VAC VAC I VAC II VBOR VKOR
	01	B17A B17B
	04	E36A E36B
	06	G12A G16A G38A G38B
	08	I02A I02B I02C I08A I08B I13A I13B I28A I28B
	21B	X06A X06B
04.6X.43↔		BORP KORP MBOR MKOR VAC VAC I VAC II VBOR VKOR
	01	B17A B17B

CHOP	MDC	DRG
	04	E36A E36B
	06	G12A G16A G38A G38B
	08	I02A I02B I02C I08A I08B I13A I13B I28A I28B
	21B	X06A X06B
04.6X.50↔		BORP KORP MBOR MKOR VAC VAC I VAC II VBOR VKOR
	01	B17A B17B
	04	E36A E36B
	06	G12A G16A G38A G38B
	08	I02A I02B I02C I08A I08B I13A I13B I28A I28B
	21B	X06A X06B
04.6X.51↔		BORP KORP MBOR MKOR VAC VAC I VAC II VBOR VKOR
	01	B17A B17B
	04	E36A E36B
	06	G12A G16A G38A G38B
	08	I02A I02B I02C I08A I08B I13A I13B I28A I28B
	21B	X06A X06B
04.6X.60↔		BORP KORP MBOR MKOR VAC VAC I VAC II VBOR VKOR
	01	B17A B17B
	04	E36A E36B
	06	G12A G16A G38A G38B
	08	I02A I02B I02C I08A I08B I13A I13B I32A I32B I32C I32D I32E I32F
	21B	X06A X06B
04.6X.70↔		BORP KORP MBOR MKOR VAC VAC I VAC II VBOR VKOR
	01	B17A B17B
	04	E36A E36B
	06	G12A G16A G38A G38B
	08	I02A I02B I02C I08A I08B I13A I13B I28A I28B
	21B	X06A X06B
04.6X.71↔		BORP KORP MBOR MKOR VAC VAC I VAC II VBOR VKOR
	01	B17A B17B
	04	E36A E36B
	06	G12A G16A G38A G38B
	08	I02A I02B I02C I08A I08B I13A I13B I28A I28B
	21B	X06A X06B
04.6X.72↔		BORP KORP MBOR MKOR VAC VAC I VAC II VBOR VKOR
	01	B17A B17B
	04	E36A E36B
	06	G12A G16A G38A

CHOP	MDC	DRG
		G38B
	08	I02A I02B I02C I08A I08B I13A I13B I28A I28B
	21B	X06A X06B
04.6X.73↔		BORP KORP MBOR MKOR VAC VAC I VAC II VBOR VKOR
	01	B17A B17B
	04	E36A E36B
	06	G12A G16A G38A G38B
	08	I02A I02B I02C I08A I08B I13A I13B I32A I32B I32C I32D I32E I32F
	21B	X06A X06B
04.6X.74↔		BORP KORP MBOR MKOR VAC VAC I VAC II VBOR VKOR
	01	B17A B17B
	04	E36A E36B
	06	G12A G16A G38A G38B
	08	I02A I02B I02C I08A I08B I13A I13B I28A I28B
	21B	X06A X06B
04.6X.75↔		BORP KORP MBOR MKOR VAC VAC I VAC II VBOR VKOR
	01	B17A B17B
	04	E36A E36B
	06	G12A G16A G38A G38B
	08	I02A I02B I02C I08A I08B I13A I13B I28A I28B
	21B	X06A X06B
04.6X.99↔		BORP KORP MBOR MKOR VAC VAC I VAC II VBOR VKOR
	01	B17A B17B
	04	E36A E36B
	06	G12A G16A G38A G38B
	08	I02A I02B I02C I08A I08B I13A I13B I28A I28B
	21B	X06A X06B
04.71↔		BORP KORP MBOR MKOR VAC VAC I VAC II VBOR VKOR
	01	B17A B17B
	03	D12A
	04	E36A E36B
	06	G12A G16A G38A G38B
	08	I02A I02B I02C I08A I08B I13A I13B
	21B	X06A X06B X06C
04.72↔		BORP KORP MBOR MKOR VAC VAC I VAC II VBOR VKOR
	01	B17A B17B
	03	D12A
	04	E36A E36B
	06	G12A G16A G38A

CHOP	MDC	DRG
		G38B
	08	I02A I02B I02C I08A I08B I13A I13B
	21B	X06A X06B X06C
04.73↔		BORP KORP MBOR MKOR VAC VAC I VAC II VBOR VKOR
	01	B17A B17B
	04	E36A E36B
	06	G12A G16A G38A G38B
	08	I02A I02B I02C I08A I08B I13A I13B
	21B	X06A X06B X06C
04.74.00↔		BORP KORP MBOR MKOR VAC VAC I VAC II VBOR VKOR
	01	B17A B17B
	04	E36A E36B
	06	G12A G16A G38A G38B
	08	I02A I02B I02C I08A I08B I13A I13B
	21B	X06A X06B X07A X07B
04.74.10↔		BORP KORP MBOR MKOR VAC VAC I VAC II VBOR VKOR
	01	B17A B17B
	03	D12A
	04	E36A E36B
	06	G12A G16A G38A G38B
	08	I02A I02B I02C I08A I08B I13A I13B
	21B	X06A X06B X07A X07B
04.74.11↔		BORP KORP MBOR MKOR VAC VAC I VAC II VBOR VKOR
	01	B17A B17B
	04	E36A E36B
	06	G12A G16A G38A G38B
	08	I02A I02B I02C I08A I08B I13A I13B
	21B	X06A X06B X07A X07B
04.74.99↔		BORP KORP MBOR MKOR VAC VAC I VAC II VBOR VKOR
	01	B17A B17B
	04	E36A E36B
	06	G12A G16A G38A G38B
	08	I02A I02B I02C I08A I08B I13A I13B
	21B	X06A X06B X07A X07B
04.75↔		BORP KORP MBOR MKOR VAC VAC I VAC II VBOR VKOR
	01	B17A B17B
	04	E36A E36B

PROC

PROC

CHOP	MDC	DRG
	06	G12A G16A G38A G38B
	08	I02A I02B I02C I08A I08B I13A I13B
	21B	X06A X06B
04.76↔		BORP KORP MBOR MKOR VAC VAC I VAC II VBOR VKOR
	01	B17A
	03	D25A D25B D28Z D29Z
	04	E36A E36B
	06	G12A G16A G38A G38B
	08	I02A I02B I02C I08A I08B I13A I13B I28A I28B
	09	J02A J02B J08Z
	21B	X01A X01B X06A X06B X06C X07A X07B
04.79.09↔		BORP MBOR VAC VAC I VAC II VBOR
	01	B17A B17B
	03	D25A D25B D28Z D29Z
	04	E36A E36B
	06	G12A G16A G38A G38B
	08	I02A I02B I02C I08A I08B I13A I13B I28A I28B
	09	J02A J02B J08Z
	21B	X06A X06B X06C
04.79.10↔		BORP KORP MBOR MKOR VAC VAC I VAC II VBOR VKOR
	01	B17A
	03	D25A D25B D28Z D29Z
	04	E36A E36B
	06	G12A G16A G38A G38B
	08	I02A I02B I02C I08A I08B I13A I13B I28A I28B
	09	J02A J02B J08Z
	21B	X01A X01B X06A X06B X06C X07A X07B
04.79.11↔		BORP KORP MBOR MKOR VAC VAC I VAC II VBOR VKOR
	01	B17A
	03	D25A D25B D28Z D29Z
	04	E36A E36B
	06	G12A G16A G38A G38B
	08	I02A I02B I02C I08A I08B I13A I13B I28A I28B
	09	J02A J02B J08Z
	21B	X01A X01B X06A X06B X06C X07A X07B
04.79.12↔		BORP KORP MBOR MKOR VAC VAC I VAC II VBOR VKOR
	01	B17A
	03	D25A D25B D28Z D29Z
	04	E36A E36B
	06	G12A G16A G38A G38B
	08	I02A I02B I02C I08A I08B I13A I13B I28A I28B
	09	J02A J02B J08Z
	21B	X01A X01B X06A X06B X06C X07A X07B
04.79.13↔		BORP KORP MBOR MKOR VAC VAC I VAC II VBOR VKOR
	01	B17A
	03	D25A D25B D28Z D29Z
	04	E36A E36B
	06	G12A G16A G38A G38B
	08	I02A I02B I02C I08A I08B I13A I13B I28A I28B
	09	J02A J02B J08Z
	21B	X01A X01B X06A X06B X06C X07A X07B
04.79.14↔		BORP KORP MBOR MKOR VAC VAC I VAC II VBOR VKOR
	01	B17A
	03	D25A D25B D28Z D29Z
	04	E36A E36B
	06	G12A G16A G38A G38B
	08	I02A I02B I02C I08A I08B I13A I13B I28A I28B
	09	J02A J02B J08Z
	21B	X01A X01B X06A X06B X06C X07A X07B
04.79.19↔		BORP KORP MBOR MKOR VAC VAC I VAC II VBOR VKOR
	01	B17A B17B
	03	D25A D25B D28Z D29Z
	04	E36A E36B
	06	G12A G16A G38A G38B
	08	I02A I02B I02C I08A I08B I13A I13B I28A I28B
	09	J02A J02B J08Z
	21B	X01A X01B X06A X06B X06C X07A X07B
04.79.20↔		BORP KORP MBOR MKOR VAC VAC I VAC II VBOR VKOR
	01	B17A
	03	D25A D25B D28Z D29Z
	04	E36A E36B
	06	G12A G16A G38A G38B
	08	I02A I02B I02C I08A I08B I13A I13B I28A I28B
	09	J02A J02B J08Z
	21B	X01A X01B X06A X06B X06C X07A X07B
04.79.21↔		BORP KORP MBOR MKOR VAC VAC I VAC II VBOR VKOR
	01	B17A
	03	D25A D25B D28Z D29Z
	04	E36A E36B
	06	G12A G16A G38A G38B
	08	I02A I02B I02C I08A I08B I13A I13B I28A I28B
	09	J02A J02B J08Z
	21B	X01A X01B X06A X06B X06C X07A X07B
04.79.22↔		BORP KORP MBOR MKOR VAC VAC I VAC II VBOR VKOR
	01	B17A
	03	D25A D25B D28Z D29Z
	04	E36A E36B
	06	G12A G16A G38A G38B
	08	I02A I02B I02C I08A I08B I13A I13B I28A I28B
	09	J02A J02B J08Z
	21B	X01A X01B X06A X06B X06C X07A X07B
04.79.23↔		BORP KORP MBOR MKOR VAC VAC I VAC II VBOR VKOR
	01	B17A
	03	D25A D25B D28Z D29Z
	04	E36A E36B
	06	G12A G16A G38A G38B
	08	I02A I02B I02C I08A I08B I13A I13B I28A I28B
	09	J02A J02B J08Z
	21B	X01A X01B X06A X06B X06C X07A X07B
04.79.24↔		BORP KORP MBOR MKOR VAC VAC I VAC II VBOR VKOR
	01	B17A
	03	D25A D25B D28Z D29Z
	04	E36A E36B
	06	G12A G16A G38A G38B
	08	I02A I02B I02C I08A I08B I13A I13B I28A I28B
	09	J02A J02B J08Z
	21B	X01A X01B X06A X06B X06C X07A

CHOP	MDC	DRG
		X07B
04.79.25↔		BORP KORP MBOR MKOR VAC VAC I VAC II VBOR VKOR
	01	B17A
	03	D25A D25B D28Z D29Z
	04	E36A E36B
	06	G12A G16A G38A G38B
	08	I02A I02B I02C I08A I08B I13A I13B I28A I28B
	09	J02A J02B J08Z
	21B	X01A X01B X06A X06B X06C X07A X07B
04.79.29↔		BORP KORP MBOR MKOR VAC VAC I VAC II VBOR VKOR
	01	B17A B17B
	03	D25A D25B D28Z D29Z
	04	E36A E36B
	06	G12A G16A G38A G38B
	08	I02A I02B I02C I08A I08B I13A I13B I28A I28B
	09	J02A J02B J08Z
	21B	X01A X01B X06A X06B X06C X07A X07B
04.81.42‡↔	01	B60A
	15	P67A P67B P67C
04.81.43‡↔	01	B60A
	15	P67A P67B P67C
04.81.44‡↔	01	B60A
	15	P67A P67B P67C
04.92.10↔	01	B21A B21B B21C B21D B21E B21F B21G
04.92.11↔	01	B21A B21B B21C B21D B21E B21F B21G
04.92.20↔	01	B21A B21B B21C B21D B21E B21F B21G
04.92.21↔	01	B21A B21B B21C B21D B21E B21F B21G
04.92.30↔	01	B21A B21B B21C B21D B21E B21F B21G
04.92.31↔	01	B21A B21B B21C B21D B21E B21F B21G
04.92.40↔	01	B21A B21B B21C B21D B21E B21F B21G
04.92.99↔	01	B21A B21B B21C B21D B21E B21F B21G
04.93.10↔	01	B17A B17B
	08	I02A I02B I02C I08A I08B I13A I13B I28A I28B
	11	L09A L09B
	21B	X06A X06B X06C
04.93.11↔	01	B17A B17B
	08	I02A I02B I02C I08A I08B I13A I13B I28A I28B
	11	L09A L09B
	21B	X06A X06B X06C
04.93.20↔	01	B17A B17B
	08	I02A I02B I02C I08A I08B I13A I13B I28A I28B
	11	L09A L09B
	21B	X06A X06B X06C
04.93.21↔	01	B17A B17B
	08	I02A I02B I02C I08A I08B I13A I13B I28A I28B
	11	L09A L09B
	21B	X06A X06B X06C
04.93.40↔	01	B17A B17B
	08	I02A I02B I02C I08A I08B I13A I13B I28A I28B
	21B	X06A X06B X06C
04.93.99↔	01	B17A B17B
	08	I02A I02B I02C I08A I08B I13A I13B I28A I28B
	11	L09A L09B
	21B	X06A X06B X06C
04.94.11↔	01	B17A B17B
	08	I02A I02B I02C I08A I08B I13A I13B I28A I28B
	11	L09A L09B
	21B	X06A X06B X06C
04.94.12↔	01	B17A B17B
	08	I02A I02B I02C I08A I08B I13A I13B I28A I28B
	11	L06A L06B L09A L09B
	21B	X06A X06B X06C
04.94.13↔	01	B17A B17B
	08	I02A I02B I02C I08A I08B I13A I13B I28A I28B
	11	L09A L09B
	21B	X06A X06B X06C
04.94.14↔	01	B17A B17B
	08	I02A I02B I02C I08A I08B I13A I13B I28A I28B
	11	L09A L09B
	21B	X06A X06B X06C
04.94.15↔	01	B17A B17B
	08	I02A I02B I02C I08A I08B I13A I13B I28A I28B
	21B	X06A X06B X06C
04.94.99↔	01	B17A B17B
	08	I02A I02B I02C I08A I08B I13A I13B I28A I28B
	11	L09A L09B
	21B	X06A X06B X06C
04.95.10↔		BORP KORP MBOR MKOR VAC VAC I VAC II VBOR VKOR
	01	B21A B21B B21C B21D B21E B21F
	04	E36A E36B
	06	G12A G16A G38A G38B
04.95.11↔		BORP KORP MBOR MKOR VAC VAC I VAC II VBOR VKOR
	01	B21A B21B B21C B21D B21E B21F
	04	E36A E36B
	06	G12A G16A G38A G38B
04.95.12↔		BORP KORP MBOR MKOR VAC VAC I VAC II VBOR VKOR
	01	B21A B21B B21C B21D B21E B21F
	04	E36A E36B
	06	G12A G16A G38A G38B
04.95.13↔		BORP KORP MBOR MKOR VAC VAC I VAC II VBOR VKOR
	01	B21A B21B B21C B21D B21E B21F
	04	E36A E36B
	06	G12A G16A G38A G38B
04.95.14↔		BORP KORP MBOR MKOR VAC VAC I VAC II VBOR VKOR
	01	B21A B21B B21C B21D B21E B21F
	04	E36A E36B
	06	G12A G16A G38A G38B
04.95.15↔		BORP KORP MBOR MKOR VAC VAC I VAC II VBOR VKOR
	01	B21A B21B B21C B21D B21E B21F
	04	E36A E36B
	06	G12A G16A G38A G38B
04.95.19↔		BORP KORP MBOR MKOR VAC VAC I VAC II VBOR VKOR
	01	B21A B21B B21C B21D B21E B21F
	04	E36A E36B
	06	G12A G16A G38A G38B
04.99.00↔	01	B17A B17B
	08	I02A I02B I02C I08A I08B I13A I13B I28A I28B
	21B	X06A X06B X06C
04.99.10↔	01	B17A B17B
	08	I02A I02B I02C I08A I08B I13A I13B I28A I28B
	21B	X06A X06B X06C
04.99.11↔	01	B17A B17B
	08	I02A I02B I02C I08A I08B I13A I13B I28A I28B
	21B	X06A X06B X06C
04.99.12↔	01	B17A B17B
	08	I02A I02B I02C I08A I08B I13A I13B I28A I28B
	21B	X06A X06B X06C

PROC

CHOP	MDC	DRG
04.99.99↔	01	B17A B17B
	08	I02A I02B I02C I08A I08B I13A I13B I28A I28B
	21B	X06A X06B X06C
05.0↔	01	B17A B17B
	08	I02A I02B I02C I08A I08B I13A I13B I28A I28B
	21B	X06A X06B X06C
05.21↔		BORP MBOR VAC VAC I VAC II VBOR
	01	B17A B17B
	03	D12A
	04	E36A E36B
	05	F21A F21B F21C
	06	G12A G16A G38A G38B
	08	I02A I02B I02C I08A I08B I13A I13B I28A I28B
	09	J02A J02B J03A J03B J04Z J10A J10B
05.22↔		BORP MBOR VAC VAC I VAC II VBOR
	01	B17A B17B
	03	D12A
	04	E36A E36B
	05	F21A F21B F21C
	06	G12A G16A G38A G38B
	08	I02A I02B I02C I08A I08B I13A I13B I28A I28B
	09	J02A J02B J03A J03B J04Z J10A J10B
05.23↔		BORP MBOR VAC VAC I VAC II VBOR
	01	B17A B17B
	04	E36A E36B
	05	F21A F21B F21C
	06	G12A G16A G38A G38B
	08	I02A I02B I02C I08A I08B I13A I13B I28A I28B
	09	J02A J02B J03A J03B J04Z J10A J10B
	13	N11A N11B
05.24↔		BORP MBOR VAC VAC I VAC II VBOR
	01	B17A B17B
	04	E36A E36B
	05	F21A F21B F21C
	06	G12A G16A G38A G38B
	08	I02A I02B I02C I08A I08B I13A I13B I28A I28B
	09	J02A J02B J03A J03B J04Z J10A J10B
	13	N11A N11B
05.25↔		BORP MBOR VAC VAC I VAC II VBOR
	01	B17A B17B
	04	E36A E36B
	05	F21A F21B F21C
	06	G12A G16A G38A G38B
	08	I02A I02B I02C I08A I08B I13A I13B I28A I28B
	09	J02A J02B J03A J03B J04Z J10A J10B
05.26↔		BORP MBOR VAC VAC I VAC II VBOR
	01	B17A B17B
	04	E36A E36B
	05	F21A F21B F21C
	06	G12A G16A G38A G38B
	08	I02A I02B I02C I08A I08B I13A I13B I28A I28B
	09	J02A J02B J03A J03B J04Z J10A J10B
05.29↔		BORP MBOR VAC VAC I VAC II VBOR
	01	B17A B17B
	03	D12A
	04	E36A E36B
	05	F21A F21B F21C
	06	G12A G16A G38A G38B
	08	I02A I02B I02C I08A I08B I13A I13B I28A I28B
	09	J02A J02B J03A J03B J04Z J10A J10B
05.81↔		BORP MBOR VAC VAC I VAC II VBOR
	01	B17A B17B
	04	E36A E36B
	06	G12A G16A G38A G38B
	08	I02A I02B I02C I08A I08B I13A I13B
	21B	X06A X06B X06C
05.89↔	01	B17A B17B
	08	I02A I02B I02C I08A I08B I13A I13B I28A I28B
	21B	X06A X06B X06C
06.02↔	10	K06A K06B K06C
	21B	X06A X06B X06C
06.09.00↔	03	D09A D09B D30A D30B D30C
	09	J02A J02B J03A J03B J04Z J11A J11B
	10	K06A K06B K06C
	21B	X06A X06B X06C
06.09.10↔	03	D09A D09B D30A D30B D30C
	09	J02A J02B J03A J03B J04Z J11A J11B
	10	K06A K06B K06C
	21B	X06A X06B X06C
06.09.11↔	03	D09A D09B D30A D30B D30C
	09	J02A J02B J03A J03B J04Z J11A J11B
	10	K06A K06B K06C
	21B	X06A X06B X06C
06.09.12↔	03	D09A D09B D30A D30B D30C
	09	J02A J02B J03A J03B J04Z J11A J11B
	10	K06A K06B K06C
	21B	X06A X06B X06C
06.09.99↔	03	D09A D09B D30A D30B D30C
	09	J02A J02B J03A J03B J04Z J11A J11B
	10	K06A K06B K06C
	21B	X06A X06B X06C
06.11‡↔		AKBB
	01	B60A
	16	Q86A
06.12↔		BORP MBOR VAC VAC I VAC II VBOR
	04	E36A E36B
	06	G12A G16A G38A G38B
	10	K06A K06B K06C
06.13.10‡↔		AKBB
	01	B60A
	16	Q86A
06.13.11‡↔		AKBB
	01	B60A
	16	Q86A
06.13.12↔		BORP MBOR VAC VAC I VAC II VBOR
	04	E36A E36B
	06	G12A G16A G38A G38B
	10	K06A K06B K06C
06.13.99‡↔		AKBB
	01	B60A
	16	Q86A
06.2X.00↔		BORP KORP MBOR MKOR VAC VAC I VAC II VBOR VKOR
	04	E36A E36B
	06	G12A G16A G38A G38B
	10	K06A K06B K06C
06.2X.11↔		BORP KORP MBOR MKOR VAC VAC I VAC II VBOR VKOR
	04	E36A E36B
	06	G12A G16A G38A G38B
	10	K06A K06B K06C
06.2X.12↔		BORP KORP MBOR MKOR VAC VAC I VAC II VBOR VKOR
	04	E36A E36B
	06	G12A G16A G38A G38B
	10	K06A K06B K06C
06.2X.99↔		BORP KORP MBOR MKOR VAC VAC I VAC II VBOR VKOR
	04	E36A E36B
	06	G12A G16A G38A G38B
	10	K06A K06B K06C

CHOP	MDC	DRG
06.31↔		BORP MBOR VAC VAC I VAC II VBOR
	04	E36A E36B
	06	G12A G16A G38A G38B
	10	K06A K06B K06C
06.32‡↔	01	B60A
	10	K06A K06B K06C
06.33↔		BORP MBOR VAC VAC I VAC II VBOR
	04	E36A E36B
	06	G12A G16A G38A G38B
	10	K06A K06B K06C
	11	L04A L04B L38Z
06.34.11↔		BORP MBOR VAC VAC I VAC II VBOR
	04	E36A E36B
	06	G12A G16A G38A G38B
	10	K06A K06B K06C
	11	L04A L04B L38Z
06.34.12↔		BORP MBOR VAC VAC I VAC II VBOR
	04	E36A E36B
	06	G12A G16A G38A G38B
	10	K06A K06B K06C
	11	L04A L04B L38Z
06.34.13↔		BORP MBOR VAC VAC I VAC II VBOR
	04	E36A E36B
	06	G12A G16A G38A G38B
	10	K06A K06B K06C
	11	L04A L04B L38Z
06.35↔		BORP MBOR VAC VAC I VAC II VBOR
	04	E36A E36B
	06	G12A G16A G38A G38B
	10	K06A K06B K06C
	11	L04A L04B L38Z
06.36↔		BORP MBOR VAC VAC I VAC II VBOR
	04	E36A E36B
	06	G12A G16A G38A G38B
	10	K06A K06B K06C
	11	L04A L04B L38Z
06.39↔		BORP MBOR VAC VAC I VAC II VBOR
	04	E36A E36B
	06	G12A G16A G38A G38B
	10	K06A K06B K06C
	11	L04A L04B L38Z
06.4X.00↔		BORP KORP MBOR MKOR VAC VAC I VAC II VBOR VKOR
	04	E36A E36B
	06	G12A G16A G38A G38B
	10	K06A K06B K06C
06.4X.10↔		BORP KORP MBOR MKOR VAC VAC I VAC II VBOR VKOR
	04	E36A E36B
	06	G12A G16A G38A G38B
	10	K06A K06B
06.4X.11↔		BORP KORP MBOR MKOR VAC VAC I VAC II VBOR VKOR
	04	E36A E36B
	06	G12A G16A G38A G38B
	10	K06A K06B
06.4X.99↔		BORP KORP MBOR MKOR VAC VAC I VAC II VBOR VKOR
	04	E36A E36B
	06	G12A G16A G38A G38B
	10	K06A K06B K06C
06.50.00↔		BORP KORP MBOR MKOR VAC VAC I VAC II VBOR VKOR
	04	E36A E36B
	06	G12A G16A G38A G38B
	10	K06A K06B K06C
06.50.10↔		BORP KORP MBOR MKOR VAC VAC I VAC II VBOR VKOR
	04	E36A E36B
	06	G12A G16A G38A G38B
	10	K06A K06B
06.50.99↔		BORP KORP MBOR MKOR VAC VAC I VAC II VBOR VKOR
	04	E36A E36B
	06	G12A G16A G38A G38B
	10	K06A K06B K06C
06.51.00↔		BORP KORP MBOR MKOR VAC VAC I VAC II VBOR VKOR
	04	E36A E36B
	06	G12A G16A G38A G38B
	10	K06A K06B K06C
06.51.10↔		BORP KORP MBOR MKOR VAC VAC I VAC II VBOR VKOR
	04	E36A E36B
	06	G12A G16A G38A G38B
	10	K06A K06B
06.51.99↔		BORP KORP MBOR MKOR VAC VAC I VAC II VBOR VKOR
	04	E36A E36B
	06	G12A G16A G38A G38B
	10	K06A K06B K06C
06.52.00↔		BORP KORP MBOR MKOR VAC VAC I VAC II VBOR VKOR
	04	E36A E36B
	06	G12A G16A G38A G38B
	10	K06A K06B K06C
06.52.10↔		BORP KORP MBOR MKOR VAC VAC I VAC II VBOR VKOR
	04	E36A E36B
	06	G12A G16A G38A G38B
	10	K06A K06B
06.52.99↔		BORP KORP MBOR MKOR VAC VAC I VAC II VBOR VKOR
	04	E36A E36B
	06	G12A G16A G38A G38B
	10	K06A K06B K06C
06.6X.00↔		BORP MBOR VAC VAC I VAC II VBOR
	04	E36A E36B
	06	G12A G16A G38A G38B
	10	K06A K06B K06C
06.6X.10↔		BORP MBOR VAC VAC I VAC II VBOR
	04	E36A E36B
	06	G12A G16A G38A G38B
	10	K06A K06B K06C
06.6X.11↔		BORP MBOR VAC VAC I VAC II VBOR
	04	E36A E36B
	06	G12A G16A G38A G38B
	10	K06A K06B K06C
06.6X.12↔		BORP MBOR VAC VAC I VAC II VBOR
	04	E36A E36B
	06	G12A G16A G38A G38B
	10	K06A K06B K06C
06.6X.99↔		BORP MBOR VAC VAC I VAC II VBOR
	04	E36A E36B
	06	G12A G16A G38A G38B
	10	K06A K06B K06C
06.7X.00↔		BORP MBOR VAC VAC I VAC II VBOR
	03	D12A D12B
	04	E36A E36B
	06	G12A G16A G38A G38B
	10	K06A K06B K06C
06.7X.10↔		BORP MBOR VAC VAC I VAC II VBOR
	03	D12A D12B
	04	E36A E36B
	06	G12A G16A G38A G38B
	10	K06A K06B K06C
06.7X.11↔		BORP MBOR VAC VAC I VAC II VBOR
	03	D12A D12B
	04	E36A E36B
	06	G12A G16A G38A G38B
	10	K06A K06B K06C
06.7X.12↔		BORP MBOR VAC VAC I VAC II VBOR
	03	D12A D12B
	04	E36A E36B
	06	G12A G16A G38A G38B
	10	K06A K06B K06C
06.7X.13↔		BORP MBOR VAC VAC I VAC II VBOR
	03	D12A D12B
	04	E36A E36B

PROC

CHOP	MDC	DRG
	06	G12A G16A G38A G38B
	10	K06A K06B K06C
06.7X.14↔		BORP MBOR VAC VAC I VAC II VBOR
	03	D12A D12B
	04	E36A E36B
	06	G12A G16A G38A G38B
	10	K06A K06B K06C
06.7X.15↔		BORP MBOR VAC VAC I VAC II VBOR
	03	D12A D12B
	04	E36A E36B
	06	G12A G16A G38A G38B
	10	K06A K06B K06C
06.7X.99↔		BORP MBOR VAC VAC I VAC II VBOR
	03	D12A D12B
	04	E36A E36B
	06	G12A G16A G38A G38B
	10	K06A K06B K06C
06.81.00↔		BORP KORP MBOR MKOR VAC VAC I VAC II VBOR VKOR
	04	E36A E36B
	06	G12A G16A G38A G38B
	10	K06A K06B K06C
	11	L04A L04B L09A L09B L38Z
06.81.10↔		BORP KORP MBOR MKOR VAC VAC I VAC II VBOR VKOR
	04	E36A E36B
	06	G12A G16A G38A G38B
	10	K06A K06B K06C
	11	L04A L04B L09A L09B L38Z
06.81.13↔		BORP KORP MBOR MKOR VAC VAC I VAC II VBOR VKOR
	04	E36A E36B
	06	G12A G16A G38A G38B
	10	K06A K06B
	11	L04A L04B L09A L09B L38Z
06.81.99↔		BORP KORP MBOR MKOR VAC VAC I VAC II VBOR VKOR
	04	E36A E36B
	06	G12A G16A G38A G38B
	10	K06A K06B K06C
	11	L04A L04B L09A L09B L38Z
06.89.00↔		BORP KORP MBOR MKOR VAC VAC I VAC II VBOR VKOR
	04	E36A E36B
	06	G12A G16A G38A G38B
	10	K06A K06B K06C
	11	L09A L09B
	21B	X06A X06B X06C
06.89.11↔		BORP KORP MBOR MKOR VAC VAC I VAC II VBOR VKOR
	04	E36A E36B
	06	G12A G16A G38A G38B
	10	K06A K06B K06C
	11	L04A L04B L09A L09B L38Z
	21B	X06A X06B X06C
06.89.13↔		BORP MBOR VAC VAC I VAC II VBOR
	04	E36A E36B
	06	G12A G16A G38A G38B
	10	K06A K06B K06C
	11	L04A L04B L09A L09B L38Z
	21B	X06A X06B X06C
06.89.99↔		BORP MBOR VAC VBOR
	04	E36A E36B
	06	G12A G16A G38A G38B
	10	K06A K06B K06C
	11	L04A L04B L09A L09B L38Z
	21B	X06A X06B X06C
06.91↔		BORP MBOR VAC VAC I VAC II VBOR
	03	D09A D09B D30A D30B
	04	E36A E36B
	06	G12A G16A G38A G38B
	09	J02A J02B J03A J03B J04Z J11A J11B
	10	K06A K06B K06C
	21B	X06A X06B X06C
06.92↔	10	K06A K06B K06C
	21B	X06A X06B X06C
06.93↔	10	K06A K06B K06C
	21B	X06A X06B X06C
06.94↔		BORP KORP MBOR MKOR VAC VAC I VAC II VBOR VKOR
	04	E36A E36B
	06	G12A G16A G38A G38B
	10	K06A K06B K06C
06.95.00↔		BORP KORP MBOR MKOR VAC VAC I VAC II VBOR VKOR
	04	E36A E36B
	06	G12A G16A G38A G38B
	10	K06A K06B K06C
06.95.10↔		BORP KORP MBOR MKOR VAC VAC I VAC II VBOR VKOR
	04	E36A E36B
	06	G12A G16A G38A G38B
	10	K06A K06B K06C
	11	L04A L04B L38Z
06.95.11↔		BORP KORP MBOR MKOR VAC VAC I VAC II VBOR VKOR
	04	E36A E36B
	06	G12A G16A G38A G38B
	10	K06A K06B K06C
	11	L04A L04B L38Z
06.95.12↔		BORP KORP MBOR MKOR VAC VAC I VAC II VBOR VKOR
	04	E36A E36B
	06	G12A G16A G38A G38B
	10	K06A K06B K06C
	11	L04A L04B L38Z
06.95.20↔		BORP KORP MBOR MKOR VAC VAC I VAC II VBOR VKOR
	04	E36A E36B
	06	G12A G16A G38A G38B
	10	K06A K06B
	11	L04A L04B L38Z
06.95.21↔		BORP KORP MBOR MKOR VAC VAC I VAC II VBOR VKOR
	04	E36A E36B
	06	G12A G16A G38A G38B
	10	K06A K06B
	11	L04A L04B L38Z
06.95.22↔		BORP KORP MBOR MKOR VAC VAC I VAC II VBOR VKOR
	04	E36A E36B
	06	G12A G16A G38A G38B
	10	K06A K06B
	11	L04A L04B L38Z
06.95.99↔		BORP KORP MBOR MKOR VAC VAC I VAC II VBOR VKOR
	04	E36A E36B
	06	G12A G16A G38A G38B
	10	K06A K06B K06C
	11	L04A L04B L38Z
06.98.00↔		BORP MBOR VAC VBOR
	04	E36A E36B
	06	G12A G16A G38A G38B
	10	K06A K06B K06C
06.98.10↔		BORP MBOR VAC VBOR
	04	E36A E36B
	06	G12A G16A G38A G38B
	10	K06A K06B K06C
06.98.99↔		BORP MBOR VAC VBOR
	04	E36A E36B
	06	G12A G16A G38A G38B
	10	K06A K06B K06C
06.99.00↔		BORP MBOR VAC VBOR
	04	E36A E36B
	06	G12A G16A G38A G38B
	10	K06A K06B K06C
06.99.10↔		BORP MBOR VAC VBOR
	04	E36A E36B

CHOP	MDC	DRG
	06	G12A G16A G38A G38B
	10	K06A K06B K06C
06.99.99↔		BORP MBOR VAC VBOR
	04	E36A E36B
	06	G12A G16A G38A G38B
	10	K06A K06B K06C
07.11‡↔		AKBB
	01	B60A
	16	Q86A
07.12↔		BORP MBOR VAC VAC I VAC II VBOR
	04	E36A E36B
	06	G12A G16A G38A G38B
	10	K03Z K14A K14B
07.13.10↔		BORP KORP MBOR MKOR VAC VAC I VAC II VBOR VKOR
	01	B01A B02A B02B B20A B20B B20C B20D
	04	E36A E36B
	06	G12A G16A G38A G38B
	10	K03Z
07.13.11↔		BORP KORP MBOR MKOR VAC VAC I VAC II VBOR VKOR
	01	B01A B02A B02B B20A B20B B20C B20D
	04	E36A E36B
	06	G12A G16A G38A G38B
	10	K03Z
07.13.12↔		BORP KORP MBOR MKOR VAC VAC I VAC II VBOR VKOR
	01	B01A B02A B02B B20A B20B B20C B20D
	04	E36A E36B
	06	G12A G16A G38A G38B
	10	K03Z
07.13.99↔		BORP KORP MBOR MKOR VAC VAC I VAC II VBOR VKOR
	01	B01A B02A B02B B20A B20B B20C B20D
	04	E36A E36B
	06	G12A G16A G38A G38B
	10	K03Z
07.14.10↔		BORP KORP MBOR MKOR VAC VAC I VAC II VBOR VKOR
	01	B01A B02A B02B B20A B20B B20C B20D
	04	E36A E36B
	06	G12A G16A G38A G38B
	10	K03Z
07.14.11↔		BORP KORP MBOR MKOR VAC VAC I VAC II VBOR VKOR
	01	B01A B02A B02B B20A B20B B20C B20D
	04	E36A E36B
	06	G12A G16A G38A G38B
	10	K03Z
07.14.12↔		BORP KORP MBOR MKOR VAC VAC I VAC II VBOR VKOR
	01	B01A B02A B02B B20A B20B B20C B20D
	04	E36A E36B
	06	G12A G16A G38A G38B
	10	K03Z
07.14.99↔		BORP KORP MBOR MKOR VAC VAC I VAC II VBOR VKOR
	01	B01A B02A B02B B20A B20B B20C B20D
	04	E36A E36B
	06	G12A G16A G38A G38B
	10	K03Z
07.16.10‡↔		AKBB
	01	B60A
	16	Q86A
07.16.11↔		BORP MBOR VAC VAC I VAC II VBOR
	04	E01A E01B E06A E06B E06C E36A E36B
	06	G12A G16A G38A G38B
	10	K09A K09B
07.16.99‡↔		AKBB
	01	B60A
	16	Q86A
07.17.10↔		BORP KORP MBOR MKOR VAC VAC I VAC II VBOR VKOR
	01	B01A B02A B02B B20A B20B B20C
	04	E36A E36B
	06	G12A G16A G38A G38B
	10	K03Z
07.17.11↔		BORP KORP MBOR MKOR VAC VAC I VAC II VBOR VKOR
	01	B01A B02A B02B B20A B20B B20C
	04	E36A E36B
	06	G12A G16A G38A G38B
	10	K03Z
07.17.12↔		BORP KORP MBOR MKOR VAC VAC I VAC II VBOR VKOR
	01	B01A B02A B02B B20A B20B B20C
	04	E36A E36B
	06	G12A G16A G38A G38B
	10	K03Z
07.17.99↔		BORP KORP MBOR MKOR VAC VAC I VAC II VBOR VKOR
	01	B01A B02A B02B B20A B20B B20C
	04	E36A E36B
	06	G12A G16A G38A G38B
	10	K03Z
07.21↔		BORP MBOR VAC VAC I VAC II VBOR
	04	E36A E36B
	06	G12A G16A G38A G38B
	10	K03Z K14A K14B
07.22.00↔		BORP MBOR VAC VAC I VAC II VBOR
	04	E36A E36B
	06	G12A G16A G16B G18A G38A G38B G38C
	09	J02A J02B J03A J03B J04Z J11A J11B
	10	K03Z K14A K14B
07.22.10↔		BORP MBOR VAC VAC I VAC II VBOR
	04	E36A E36B
	06	G12A G16A G16B G18A G38A G38B G38C
	09	J02A J02B J03A J03B J04Z J11A J11B
	10	K03Z K14A K14B
07.22.11↔		BORP MBOR VAC VAC I VAC II VBOR
	04	E36A E36B
	06	G12A G16A G16B G18A G38A G38B G38C
	09	J02A J02B J03A J03B J04Z J11A J11B
	10	K03Z K14A K14B
07.22.12↔		BORP MBOR VAC VAC I VAC II VBOR
	04	E36A E36B
	06	G12A G16A G16B G18A G38A G38B G38C
	09	J02A J02B J03A J03B J04Z J11A J11B
	10	K03Z K14A K14B
07.22.99↔		BORP MBOR VAC VAC I VAC II VBOR
	04	E36A E36B
	06	G12A G16A G16B G18A G38A G38B G38C
	09	J02A J02B J03A J03B J04Z J11A J11B
	10	K03Z K14A K14B
07.29↔		BORP MBOR VAC VAC I VAC II VBOR
	04	E36A E36B
	06	G12A G16A G16B G18A G38A G38B G38C

PROC

PROC

CHOP	MDC	DRG
	09	J02A J02B J03A J03B J04Z J11A J11B
	10	K03Z K14A K14B
07.3↔		BORP MBOR VAC VAC I VAC II VBOR
	04	E36A E36B
	06	G12A G16A G16B G18A G38A G38B G38C
	09	J02A J02B J03A J03B J04Z J11A J11B
	10	K03Z K14A K14B
07.41↔		BORP MBOR VAC VBOR
	04	E36A E36B
	06	G12A G16A G38A G38B
	10	K03Z K14A K14B
	21B	X06A X06B X06C
07.42↔		BORP MBOR VAC VAC I VAC II VBOR
	04	E36A E36B
	06	G12A G16A G38A G38B
	10	K03Z K14A K14B
	21B	X06A X06B X06C
07.43↔		BORP MBOR VAC VBOR
	04	E36A E36B
	06	G12A G16A G38A G38B
	10	K03Z K14A K14B
	21B	X06A X06B X06C
07.44↔		BORP MBOR VAC VAC I VAC II VBOR
	04	E36A E36B
	06	G12A G16A G38A G38B
	10	K03Z K14A K14B
	21B	X06A X06B X06C
07.45↔		BORP MBOR VAC VBOR
	04	E36A E36B
	06	G12A G16A G38A G38B
	10	K03Z K14A K14B
	21B	X06A X06B X06C
07.51↔		BORP KORP MBOR MKOR VAC VAC I VAC II VBOR VKOR
	01	B01A B02A B02B B20A B20B B20C
	04	E36A E36B
	06	G12A G16A G33Z G38A G38B G38C
	07	H33Z
	10	K03Z
	11	L33Z
	21B	X07A X07B
07.52↔		BORP KORP MBOR MKOR VAC VAC I VAC II VBOR VKOR
	01	B01A B02A B02B B20A B20B B20C
	04	E36A E36B
	06	G12A G16A G33Z G38A G38B G38C
	07	H33Z
	10	K03Z
	11	L33Z
	21B	X07A X07B
07.53↔		BORP KORP MBOR MKOR VAC VAC I VAC II VBOR VKOR
	01	B01A B02A B02B B20A B20B B20C
	04	E36A E36B
	06	G12A G16A G33Z G38A G38B G38C
	07	H33Z
	10	K03Z
	11	L33Z
	21B	X07A X07B
07.54↔		BORP KORP MBOR MKOR VAC VAC I VAC II VBOR VKOR
	01	B01A B02A B02B B20A B20B B20C
	04	E36A E36B
	06	G12A G16A G33Z G38A G38B G38C
	07	H33Z
	10	K03Z
	11	L33Z
	21B	X07A X07B
07.59↔		BORP KORP MBOR MKOR VAC VAC I VAC II VBOR VKOR
	01	B01A B02A B02B B20A B20B B20C
	04	E36A E36B
	06	G12A G16A G33Z G38A G38B G38C
	07	H33Z
	10	K03Z
	11	L33Z
	21B	X07A X07B
07.61↔		BORP KORP MBOR MKOR VAC VAC I VAC II VBOR VKOR
	01	B01A B02A B02B B20A B20B B20C
	04	E36A E36B
	06	G12A G16A G33Z G38A G38B G38C
	07	H33Z
	08	I15A I15B
	10	K03Z
	11	L33Z
	21A	W01A W01B W01C
	21B	X06A X06B X06C X07A X07B
07.62↔		BORP KORP MBOR MKOR VAC VAC I VAC II VBOR VKOR
	01	B01A B02A B02B B20A B20B B20C
	03	D25A D25B
	04	E36A E36B
	06	G12A G16A G33Z G38A G38B G38C
	07	H33Z
	08	I15A I15B
	09	J02A J02B J08Z
	10	K03Z
	11	L33Z
	21A	W01A W01B W01C
	21B	X06A X06B X06C X07A X07B
07.63↔		BORP KORP MBOR MKOR VAC VAC I VAC II VBOR VKOR
	01	B01A B02A B02B B20A B20B B20C
	04	E36A E36B
	06	G12A G16A G33Z G38A G38B G38C
	07	H33Z
	08	I15A I15B
	10	K03Z
	11	L33Z
	21A	W01A W01B W01C
	21B	X06A X06B X06C X07A X07B
07.64↔		BORP KORP MBOR MKOR VAC VAC I VAC II VBOR VKOR
	01	B01A B02A B02B B20A B20B B20C
	04	E36A E36B
	06	G12A G16A G33Z G38A G38B G38C
	07	H33Z
	08	I15A I15B
	10	K03Z
	11	L33Z
	21A	W01A W01B W01C
	21B	X06A X06B X06C X07A X07B
07.65↔		BORP KORP MBOR MKOR VAC VAC I VAC II VBOR VKOR
	01	B01A B02A B02B B20A B20B B20C
	03	D25A D25B
	04	E36A E36B
	06	G12A G16A G33Z G38A G38B G38C
	07	H33Z
	08	I15A I15B
	09	J02A J02B J08Z
	10	K03Z
	11	L33Z
	21A	W01A W01B W01C
	21B	X06A X06B X06C X07A X07B
07.68↔		BORP KORP MBOR MKOR VAC VAC I VAC II VBOR VKOR
	01	B01A B02A B02B B20A B20B B20C
	04	E36A E36B
	06	G12A G16A G33Z G38A G38B G38C
	07	H33Z
	08	I15A I15B
	10	K03Z
	11	L33Z
	21A	W01A W01B W01C
	21B	X06A X06B X06C X07A X07B
07.69↔		BORP KORP MBOR MKOR VAC VAC I VAC II VBOR VKOR
	01	B01A B02A B02B B20A B20B B20C
	04	E36A E36B
	06	G12A G16A G33Z

CHOP	MDC	DRG
		G38A G38B G38C
	07	H33Z
	08	I15A I15B
	10	K03Z
	11	L33Z
	21A	W01A W01B W01C
	21B	X06A X06B X06C
		X07A X07B
07.71↔		BORP KORP MBOR
		MKOR VAC VAC I
		VAC II VBOR VKOR
	01	B01A B02A B02B
		B20A B20B B20C
		B20D
	04	E36A E36B
	06	G12A G16A G33Z
		G38A G38B G38C
	07	H33Z
	09	J02A J02B J03A
		J03B J04Z J11A
		J11B
	10	K03Z
	11	L33Z
	21B	X07A X07B
07.72↔		BORP KORP MBOR
		MKOR VAC VAC I
		VAC II VBOR VKOR
	01	B01A B02A B02B
		B20A B20B B20C
		B20D
	04	E36A E36B
	06	G12A G16A G33Z
		G38A G38B G38C
	07	H33Z
	09	J02A J02B J03A
		J03B J04Z J11A
		J11B
	10	K03Z
	11	L33Z
	21B	X07A X07B
07.79↔		BORP KORP MBOR
		MKOR VAC VAC I
		VAC II VBOR VKOR
	01	B01A B02A B02B
		B20A B20B B20C
		B20D
	04	E36A E36B
	06	G12A G16A G33Z
		G38A G38B G38C
	07	H33Z
	09	J02A J02B J03A
		J03B J04Z J11A
		J11B
	10	K03Z
	11	L33Z
	21B	X07A X07B
07.80↔		BORP KORP MBOR
		MKOR VAC VAC I
		VAC II VBOR VKOR
	01	B17A B17B
	04	E01A E01B E06A
		E06B E06C E36A
		E36B
	06	G12A G16A G33Z
		G38A G38B G38C
	07	H33Z
	10	K09A K09B
	11	L33Z
	21B	X06A X06B X06C
07.81↔		BORP MBOR VAC
		VAC I VAC II VBOR
	01	B17A B17B
	04	E01A E01B E06A
		E06B E06C E36A
		E36B
	06	G12A G16A G33Z
		G38A G38B G38C
	07	H33Z
	10	K09A K09B
	11	L33Z
	21B	X06A X06B X06C
07.82↔		BORP KORP MBOR
		MKOR VAC VAC I
		VAC II VBOR VKOR
	01	B17A B17B
	04	E01A E01B E05A
		E05B E05C E36A
		E36B
	06	G12A G16A G33Z
		G38A G38B G38C
	07	H33Z
	10	K09A K09B
	11	L33Z
	21B	X06A X06B X06C
		X07A X07B
07.83↔		BORP MBOR VAC
		VAC I VAC II VBOR
	01	B17A B17B
	04	E01A E01B E06A
		E06B E06C E36A
		E36B
	06	G12A G16A G33Z
		G38A G38B G38C
	07	H33Z
	09	J02A J02B J03A
		J03B J04Z J10A
		J10B
	10	K09A K09B
	11	L33Z
	21B	X06A X06B X06C
		X07A X07B
07.84↔		BORP KORP MBOR
		MKOR VAC VAC I
		VAC II VBOR VKOR
	01	B17A B17B
	04	E01A E01B E05A
		E05B E05C E36A
		E36B
	06	G12A G16A G33Z
		G38A G38B G38C
	07	H33Z
	10	K09A K09B
	11	L33Z
	21B	X06A X06B X06C
		X07A X07B
07.91↔		BORP KORP MBOR
		MKOR VAC VAC I
		VAC II VBOR VKOR
	04	E01A E01B E06A
		E06B E06C E36A
		E36B
	06	G12A G16A G33Z
		G38A G38B G38C
	07	H33Z
	10	K09A K09B
	11	L33Z
	21B	X06A X06B X06C
07.92↔		BORP MBOR VAC
		VBOR
	04	E01A E01B E06A
		E06B E06C E36A
		E36B
	06	G12A G16A G38A
		G38B
	07	H33Z
	10	K09A K09B
	11	L33Z
	21B	X06A X06B X06C
07.93↔		BORP KORP MBOR
		MKOR VAC VAC I
		VAC II VBOR VKOR
	04	E01A E01B E06A
		E06B E06C E36A
		E36B
	06	G12A G16A G33Z
		G38A G38B G38C
	07	H33Z
	10	K09A K09B
	11	L33Z
	21B	X06A X06B X06C
07.94↔		BORP MBOR VAC
		VAC I VAC II VBOR
	04	E36A E36B
	06	G12A G16A G38A
		G38B
	10	K06A K06B K06C
07.95↔		BORP MBOR VAC
		VAC I VAC II VBOR
	04	E01A E01B E06A
		E06B E06C E36A
		E36B
	06	G12A G16A G33Z
		G38A G38B G38C
	07	H33Z
	10	K09A K09B
	11	L33Z
	21B	X06A X06B X06C
07.98↔		BORP MBOR VAC
		VBOR
	04	E01A E01B E06A
		E06B E06C E36A
		E36B
	06	G12A G16A G33Z
		G38A G38B G38C
	07	H33Z
	10	K09A K09B
	11	L33Z
	21B	X06A X06B X06C
07.99↔		BORP MBOR VAC
		VBOR
	04	E01A E01B E06A
		E06B E06C E36A
		E36B
	06	G12A G16A G38A
		G38B
	07	H33Z
	10	K09A K09B
	11	L33Z
	21B	X06A X06B X06C
08.09‡↔	01	B60A
	09	J11A J11B
08.11.10‡↔		AKBB
	01	B60A
	02	C14Z
	16	Q86A
08.11.20↔	02	C01Z C12Z
	21B	X06A X06B X06C
08.11.99‡↔		AKBB
	01	B60A

PROC

CHOP	MDC	DRG
	02	C14Z
	16	Q86A
08.20.00‡↔	01	B60A
	09	J11A J11B
08.20.10‡↔	01	B60A
	09	J11A J11B
08.20.99‡↔	01	B60A
	09	J11A J11B
08.21↔	02	C01Z C12Z
	09	J02A J02B J03A J03B J04Z J11A J11B
	10	K09A K09B
	21B	X06A X06B X06C
08.22↔	01	B17A B17B
	02	C01Z C12Z
	05	F21A F21B F21C
	08	I27A I27B I27C I27D
	09	J02A J02B J03A J03B J04Z J08Z J21Z J22Z
	10	K09A K09B
	21B	X06A X06B X06C
08.23↔	01	B17A B17B
	02	C01Z C12Z
	05	F21A F21B F21C
	08	I27A I27B I27C I27D
	09	J02A J02B J03A J03B J04Z J08Z J21Z J22Z
	10	K09A K09B
	21B	X06A X06B X06C
08.24↔	01	B17A B17B
	02	C01Z C12Z
	05	F21A F21B F21C
	08	I27A I27B I27C I27D
	09	J02A J02B J03A J03B J04Z J08Z J21Z J22Z
	10	K09A K09B
	21B	X06A X06B X06C
08.25‡↔	01	B60A
	09	J11A J11B
08.31↔		BORP MBOR VAC VAC I VAC II VBOR
	02	C01Z C12Z
	04	E36A E36B
	06	G12A G16A G38A G38B
	21B	X06A X06B X06C
08.32↔		BORP MBOR VAC VAC I VAC II VBOR
	02	C01Z C12Z
	04	E36A E36B
	06	G12A G16A G38A G38B
	21B	X06A X06B X06C
08.33↔		BORP MBOR VAC VAC I VAC II VBOR
	02	C01Z C12Z
	04	E36A E36B
	06	G12A G16A G38A G38B
	21B	X06A X06B X06C
08.34↔		BORP MBOR VAC VBOR
	02	C01Z C12Z
	04	E36A E36B
	06	G12A G16A G38A G38B
	21B	X06A X06B X06C
08.35↔		BORP MBOR VAC VAC I VAC II VBOR
	02	C01Z C12Z
	04	E36A E36B
	06	G12A G16A G38A G38B
	21B	X06A X06B X06C
08.36↔		BORP MBOR VAC VBOR
	02	C01Z C12Z
	04	E36A E36B
	06	G12A G16A G38A G38B
	21B	X06A X06B X06C
08.37↔		BORP MBOR VAC VBOR
	02	C01Z C12Z
	04	E36A E36B
	06	G12A G16A G38A G38B
	21B	X06A X06B X06C
08.38↔		BORP MBOR VAC VBOR
	02	C01Z C12Z
	04	E36A E36B
	06	G12A G16A G38A G38B
	09	J02A J02B J03A J03B J04Z J11A J11B
	21B	X06A X06B X06C
08.41↔		BORP MBOR VAC VBOR
	02	C01Z C12Z
	04	E36A E36B
	06	G12A G16A G38A G38B
	21B	X06A X06B X06C
08.42↔		BORP MBOR VAC VBOR
	02	C01Z C12Z
	04	E36A E36B
	06	G12A G16A G38A G38B
	21B	X06A X06B X06C
08.43↔		BORP MBOR VAC VAC I VAC II VBOR
	02	C01Z C12Z
	04	E36A E36B
	06	G12A G16A G38A G38B
	08	I17Z
	09	J02A J02B J03A J03B J04Z J10A J10B
	10	K09A K09B
	21B	X06A X06B X06C
08.44.00↔		BORP MBOR VAC VBOR
	02	C01Z C12Z
	04	E36A E36B
	06	G12A G16A G38A G38B
	08	I17Z
	09	J02A J02B J03A J03B J04Z J10A J10B
	10	K09A K09B
	21B	X06A X06B X06C
08.44.10↔		BORP MBOR VAC VBOR
	02	C01Z C12Z
	04	E36A E36B
	06	G12A G16A G38A G38B
	08	I17Z
	09	J02A J02B J03A J03B J04Z J10A J10B
	10	K09A K09B
	21B	X06A X06B X06C
08.44.99↔		BORP MBOR VAC VBOR
	02	C01Z C12Z
	04	E36A E36B
	06	G12A G16A G38A G38B
	08	I17Z
	09	J02A J02B J03A J03B J04Z J10A J10B
	10	K09A K09B
	21B	X06A X06B X06C
08.49.00↔		BORP MBOR VAC VBOR
	02	C01Z C12Z
	04	E36A E36B
	06	G12A G16A G38A G38B
	21B	X06A X06B X06C
08.49.10↔		BORP MBOR VAC VBOR
	02	C01Z C12Z
	04	E36A E36B
	06	G12A G16A G38A G38B
	21B	X06A X06B X06C
08.49.11↔		BORP MBOR VAC VBOR
	02	C01Z C12Z
	04	E36A E36B
	06	G12A G16A G38A G38B
	21B	X06A X06B X06C
08.49.99↔		BORP MBOR VAC VBOR
	02	C01Z C12Z
	04	E36A E36B
	06	G12A G16A G38A G38B
	21B	X06A X06B X06C
08.51↔		BORP MBOR VAC VBOR
	01	B17A B17B
	02	C01Z C12Z
	04	E36A E36B
	06	G12A G16A G38A G38B
	09	J02A J02B J03A J03B J04Z J10A J10B
	21B	X06A X06B X06C
08.59.00↔		BORP MBOR VAC VBOR
	01	B17A B17B
	02	C01Z C12Z

CHOP	MDC	DRG
	04	E36A E36B
	06	G12A G16A G38A G38B
	09	J02A J02B J03A J03B J04Z J10A J10B
	21B	X06A X06B X06C
08.59.10↔		BORP MBOR VAC VBOR
	01	B17A B17B
	02	C01Z C12Z
	04	E36A E36B
	06	G12A G16A G38A G38B
	09	J02A J02B J03A J03B J04Z J10A J10B
	21B	X06A X06B X06C
08.59.11↔		BORP MBOR VAC VBOR
	01	B17A B17B
	02	C01Z C12Z
	04	E36A E36B
	06	G12A G16A G38A G38B
	09	J02A J02B J03A J03B J04Z J10A J10B
	21B	X06A X06B X06C
08.59.12↔		BORP MBOR VAC VBOR
	01	B17A B17B
	02	C01Z C12Z
	04	E36A E36B
	06	G12A G16A G38A G38B
	09	J02A J02B J03A J03B J04Z J10A J10B
	21B	X06A X06B X06C
08.59.99↔		BORP MBOR VAC VBOR
	01	B17A B17B
	02	C01Z C12Z
	04	E36A E36B
	06	G12A G16A G38A G38B
	09	J02A J02B J03A J03B J04Z J10A J10B
	21B	X06A X06B X06C
08.61.10↔		BORP MBOR VAC VAC I VAC II VB VBOR
	02	C01Z C12Z
	04	E36A E36B
	05	F21A F21B F21C
	06	G12A G16A G38A G38B
	08	I17Z I28A I28B I28C
	09	J02A J02B J03A J03B J04Z J10A J10B
	10	K09A K09B
	21B	X06A X06B X06C
	22	Y02A Y02B Y02C
08.61.11↔		BORP MBOR VAC VAC I VAC II VB VBOR
	02	C01Z C12Z
	04	E36A E36B
	05	F21A F21B F21C
	06	G12A G16A G38A G38B
	08	I17Z I28A I28B I28C
	09	J02A J02B J03A J03B J04Z J10A J10B
	10	K09A K09B
	21B	X06A X06B X06C
	22	Y02A Y02B Y02C
08.62↔		BORP MBOR VAC VAC I VAC II VB VBOR
	02	C01Z C12Z
	04	E36A E36B
	05	F21A F21B F21C
	06	G12A G16A G38A G38B
	08	I17Z I28A I28B I28C
	09	J02A J02B J03A J03B J04Z J10A J10B
	10	K09A K09B
	21B	X06A X06B X06C
	22	Y02A Y02B Y02C
08.63↔		BORP MBOR VAC VAC I VAC II VBOR
	02	C01Z C12Z
	04	E36A E36B
	06	G12A G16A G38A G38B
	09	J02A J02B J03A J03B J04Z J10A J10B
	10	K09A K09B
	21B	X06A X06B X06C
08.64↔		BORP MBOR VAC VAC I VAC II VB VBOR
	02	C01Z C12Z
	04	E36A E36B
	05	F21A F21B F21C
	06	G12A G16A G38A G38B
	08	I17Z I28A I28B I28C
	09	J02A J02B J03A J03B J04Z J10A J10B
	10	K09A K09B
	21B	X06A X06B X06C
	22	Y02A Y02B Y02C
08.69.00↔		BORP MBOR VAC VAC I VAC II VB VBOR
	02	C01Z C12Z
	04	E36A E36B
	05	F21A F21B F21C
	06	G12A G16A G38A G38B
	08	I17Z I28A I28B I28C
	09	J02A J02B J03A J03B J04Z J10A J10B
	10	K09A K09B
	21B	X06A X06B X06C
	22	Y02A Y02B Y02C
08.69.10↔		BORP MBOR VAC VAC I VAC II VBOR
	02	C01Z C12Z
	04	E36A E36B
	06	G12A G16A G38A G38B
	08	I17Z
	09	J02A J02B J03A J03B J04Z J10A J10B
	10	K09A K09B
	21B	X06A X06B X06C
	22	Y02A Y02B Y02C
08.69.11↔		BORP MBOR VAC VAC I VAC II VBOR
	02	C01Z C12Z
	04	E36A E36B
	06	G12A G16A G38A G38B
	08	I17Z
	09	J02A J02B J03A J03B J04Z J10A J10B
	10	K09A K09B
	21B	X06A X06B X06C
	22	Y02A Y02B Y02C
08.69.12↔		BORP MBOR VAC VAC I VAC II VB VBOR
	02	C01Z C12Z
	04	E36A E36B
	05	F21A F21B F21C
	06	G12A G16A G38A G38B
	08	I17Z I28A I28B I28C
	09	J02A J02B J03A J03B J04Z J10A J10B
	10	K09A K09B
	21B	X06A X06B X06C
	22	Y02A Y02B Y02C
08.69.13↔		BORP MBOR VAC VAC I VAC II VBOR
	02	C01Z C12Z
	04	E36A E36B
	06	G12A G16A G38A G38B
	08	I17Z
	09	J02A J02B J03A J03B J04Z J10A J10B
	10	K09A K09B
	21B	X06A X06B X06C
	22	Y02A Y02B Y02C
08.69.99↔		BORP MBOR VAC VAC I VAC II VB VBOR
	02	C01Z C12Z
	04	E36A E36B
	05	F21A F21B F21C
	06	G12A G16A G38A G38B
	08	I17Z I28A I28B I28C
	09	J02A J02B J03A J03B J04Z J10A J10B

PROC

CHOP	MDC	DRG
	10	K09A K09B
	21B	X06A X06B X06C
	22	Y02A Y02B Y02C
08.71↔		BORP MBOR VAC VBOR
	02	C01Z C12Z
	04	E36A E36B
	06	G12A G16A G38A G38B
	21B	X06A X06B X06C
08.72↔		BORP MBOR VAC VBOR
	02	C01Z C12Z
	04	E36A E36B
	06	G12A G16A G38A G38B
	21B	X06A X06B X06C
08.73.00↔		BORP MBOR VAC VBOR
	02	C01Z C12Z
	04	E36A E36B
	06	G12A G16A G38A G38B
	21B	X06A X06B X06C
08.73.10↔		BORP MBOR VAC VB VBOR
	02	C01Z C12Z
	04	E36A E36B
	05	F21A F21B F21C
	06	G12A G16A G38A G38B
	08	I28A I28B I28C
	21B	X06A X06B X06C
	22	Y02A Y02B Y02C
08.73.99↔		BORP MBOR VAC VBOR
	02	C01Z C12Z
	04	E36A E36B
	06	G12A G16A G38A G38B
	21B	X06A X06B X06C
	22	Y02A Y02B Y02C
08.74.00↔		BORP MBOR VAC VBOR
	02	C01Z C12Z
	04	E36A E36B
	06	G12A G16A G38A G38B
	21B	X06A X06B X06C
	22	Y02A Y02B Y02C
08.74.10↔		BORP MBOR VAC VBOR
	02	C01Z C12Z
	04	E36A E36B
	06	G12A G16A G38A G38B
	21B	X06A X06B X06C
08.74.99↔		BORP MBOR VAC VBOR
	02	C01Z C12Z
	04	E36A E36B
	06	G12A G16A G38A G38B
	21B	X06A X06B X06C
08.82↔		BORP MBOR VAC VBOR
	02	C01Z C12Z
	04	E36A E36B
	06	G12A G16A G38A G38B
	08	I17Z
	09	J02A J02B J03A J03B J04Z J10A J10B
	21B	X06A X06B X06C
08.83↔		BORP MBOR VAC VBOR
	02	C01Z C12Z
	04	E36A E36B
	06	G12A G16A G38A G38B
	08	I17Z
	09	J02A J02B J03A J03B J04Z J10A J10B
	21B	X06A X06B X06C
08.84↔		BORP MBOR VAC VBOR
	02	C01Z C12Z
	04	E36A E36B
	06	G12A G16A G38A G38B
	08	I17Z
	09	J02A J02B J03A J03B J04Z J10A J10B
	21B	X06A X06B X06C
08.85↔		BORP MBOR VAC VBOR
	02	C01Z C12Z
	04	E36A E36B
	06	G12A G16A G38A G38B
	08	I17Z
	09	J02A J02B J03A J03B J04Z J10A J10B
	21B	X06A X06B X06C
08.86↔		BORP MBOR VAC VBOR
	02	C01Z C12Z
	04	E36A E36B
	06	G12A G16A G38A G38B
	09	J02A J02B J03A J03B J04Z J10A J10B
	10	K09A K09B
	21B	X06A X06B X06C
08.87↔		BORP MBOR VAC VBOR
	02	C01Z C12Z
	04	E36A E36B
	06	G12A G16A G38A G38B
	09	J02A J02B J03A J03B J04Z J10A J10B
	10	K09A K09B
	21B	X06A X06B X06C
08.89.10↔		BORP MBOR VAC VBOR
	01	B17A B17B
	02	C01Z C12Z
	04	E36A E36B
	06	G12A G16A G38A G38B
	09	J02A J02B J03A J03B J04Z J08Z J10A J10B J21Z J22Z
	21B	X01A X01B X06A X06B X06C X07A X07B
08.89.11↔		BORP MBOR VAC VBOR
	01	B17A B17B
	02	C01Z C12Z
	04	E36A E36B
	06	G12A G16A G38A G38B
	09	J02A J02B J03A J03B J04Z J08Z J10A J10B J21Z J22Z
	21B	X01A X01B X06A X06B X06C X07A X07B
08.89.12↔		BORP MBOR VAC VBOR
	01	B17A B17B
	02	C01Z C12Z
	04	E36A E36B
	06	G12A G16A G38A G38B
	09	J02A J02B J03A J03B J04Z J08Z J10A J10B J21Z J22Z
	21B	X01A X01B X06A X06B X06C X07A X07B
08.89.13↔		BORP MBOR VAC VBOR
	01	B17A B17B
	02	C01Z C12Z
	04	E36A E36B
	06	G12A G16A G38A G38B
	09	J02A J02B J03A J03B J04Z J08Z J10A J10B J21Z J22Z
	21B	X01A X01B X06A X06B X06C X07A X07B
08.89.14↔		BORP MBOR VAC VBOR
	01	B17A B17B
	02	C01Z C12Z
	04	E36A E36B
	06	G12A G16A G38A G38B
	09	J02A J02B J03A J03B J04Z J08Z J10A J10B J21Z J22Z
	21B	X01A X01B X06A X06B X06C X07A X07B
08.89.15↔		BORP MBOR VAC VBOR
	01	B17A B17B
	02	C01Z C12Z
	04	E36A E36B
	06	G12A G16A G38A G38B
	09	J02A J02B J03A J03B J04Z J08Z J10A J10B J21Z

CHOP	MDC	DRG
		J22Z
	21B	X01A X01B X06A X06B X06C X07A X07B
08.89.99↔		BORP MBOR VAC VBOR
	01	B17A B17B
	02	C01Z C12Z
	04	E36A E36B
	06	G12A G16A G38A G38B
	09	J02A J02B J03A J03B J04Z J08Z J10A J10B J21Z J22Z
	21B	X01A X01B X06A X06B X06C X07A X07B
09.0↔	02	C01Z C13A C13B
09.11↔	02	C01Z C13A C13B
	21B	X06A X06B X06C
09.12↔	02	C01Z C13A C13B
	21B	X06A X06B X06C
09.20↔	02	C01Z C13A C13B
	21B	X06A X06B X06C
09.21↔	02	C01Z C13A C13B
	21B	X06A X06B X06C
09.22↔	02	C01Z C13A C13B
	21B	X06A X06B X06C
09.23↔	02	C01Z C13A C13B
	21B	X06A X06B X06C
09.3↔	02	C01Z C13A C13B
	03	D09A D09B D30A D30B
	21B	X06A X06B X06C
09.44↔	02	C01Z C13A C13B
	03	D12A D12B
09.53↔	02	C01Z C13A C13B
09.6↔	02	C01Z C13A C13B
	03	D09A D09B D30A D30B
	21B	X06A X06B X06C
09.71↔		BORP MBOR VAC VBOR
	02	C01Z C13A C13B
	04	E36A E36B
	06	G12A G16A G38A G38B
	21B	X06A X06B X06C
09.72↔		BORP MBOR VAC VBOR
	02	C01Z C13A C13B
	04	E36A E36B
	06	G12A G16A G38A G38B
	21B	X06A X06B X06C
09.73↔		BORP MBOR VAC VBOR
	02	C01Z C13A C13B
	04	E36A E36B
	06	G12A G16A G38A G38B
09.81↔		BORP MBOR VAC VBOR
	02	C01Z C13A C13B
	03	D09A D09B D30A D30B
	04	E36A E36B
	06	G12A G16A G38A G38B
	21B	X06A X06B X06C
09.82↔		BORP MBOR VAC VBOR
	02	C01Z C13A C13B
	04	E36A E36B
	06	G12A G16A G38A G38B
	21B	X06A X06B X06C
09.83↔		BORP MBOR VAC VBOR
	02	C01Z C13A C13B
	04	E36A E36B
	06	G12A G16A G38A G38B
	21B	X06A X06B X06C
09.91↔	02	C01Z C13A C13B
	21B	X06A X06B X06C
09.99↔		BORP MBOR VAC VBOR
	02	C01Z C13A C13B
	03	D09A D09B D30A D30B D30C
	04	E36A E36B
	06	G12A G16A G38A G38B
	21B	X06A X06B X06C
10.0↔		BORP MBOR VAC VBOR
	02	C01Z C14Z
	04	E36A E36B
	06	G12A G16A G38A G38B
	21B	X06A X06B X06C
10.31.10↔		BORP MBOR VAC VBOR
	02	C01Z C14Z
	04	E36A E36B
	06	G12A G16A G38A G38B
	21B	X06A X06B X06C
10.31.99↔		BORP MBOR VAC VBOR
	02	C01Z C14Z
	04	E36A E36B
	06	G12A G16A G38A G38B
	21B	X06A X06B X06C
10.41.00↔		BORP MBOR VAC VAC I VAC II VBOR
	02	C01Z C14Z
	04	E36A E36B
	06	G12A G16A G38A G38B
	21B	X06A X06B X06C
10.41.10↔		BORP MBOR VAC VAC I VAC II VBOR
	02	C01Z C14Z
	04	E36A E36B
	06	G12A G16A G38A G38B
	21B	X06A X06B X06C
10.41.11↔		BORP MBOR VAC VAC I VAC II VBOR
	02	C01Z C14Z
	04	E36A E36B
	06	G12A G16A G38A G38B
	21B	X06A X06B X06C
10.41.99↔		BORP MBOR VAC VAC I VAC II VBOR
	02	C01Z C14Z
	04	E36A E36B
	06	G12A G16A G38A G38B
	21B	X06A X06B X06C
10.42.00↔		BORP MBOR VAC VAC I VAC II VBOR
	02	C01Z C14Z
	04	E36A E36B
	06	G12A G16A G38A G38B
	21B	X06A X06B X06C
10.42.10↔		BORP MBOR VAC VAC I VAC II VBOR
	02	C01Z C14Z
	04	E36A E36B
	06	G12A G16A G38A G38B
	21B	X06A X06B X06C
10.42.11↔		BORP MBOR VAC VAC I VAC II VBOR
	02	C01Z C14Z
	04	E36A E36B
	06	G12A G16A G38A G38B
	21B	X06A X06B X06C
10.42.99↔		BORP MBOR VAC VAC I VAC II VBOR
	02	C01Z C14Z
	04	E36A E36B
	06	G12A G16A G38A G38B
	21B	X06A X06B X06C
10.43↔		BORP MBOR VAC VAC I VAC II VBOR
	02	C01Z C14Z
	04	E36A E36B
	06	G12A G16A G38A G38B
	21B	X06A X06B X06C
10.44.00↔		BORP MBOR VAC VAC I VAC II VBOR
	02	C01Z C14Z
	04	E36A E36B
	06	G12A G16A G38A G38B
	21B	X06A X06B X06C
10.44.10↔		BORP MBOR VAC VAC I VAC II VBOR
	02	C01Z C14Z
	04	E36A E36B
	06	G12A G16A G38A G38B
	21B	X06A X06B X06C
10.44.11↔		BORP MBOR VAC VAC I VAC II VBOR
	02	C01Z C14Z
	04	E36A E36B
	06	G12A G16A G38A G38B
	21B	X06A X06B X06C
10.44.99↔		BORP MBOR VAC VAC I VAC II VBOR
	02	C01Z C14Z
	04	E36A E36B
	06	G12A G16A G38A G38B
	21B	X06A X06B X06C
10.45.00↔		BORP MBOR VAC VAC I VAC II VBOR

PROC

CHOP	MDC	DRG
	02	C01Z C14Z
	04	E36A E36B
	06	G12A G16A G38A G38B
	21B	X06A X06B X06C
10.45.09↔		BORP MBOR VAC VAC I VAC II VBOR
	02	C01Z C14Z
	04	E36A E36B
	06	G12A G16A G38A G38B
	21B	X06A X06B X06C
10.45.11↔		BORP MBOR VAC VAC I VAC II VBOR
	02	C01Z C14Z
	04	E36A E36B
	06	G12A G16A G38A G38B
	21B	X06A X06B X06C
10.49.00↔		BORP MBOR VAC VBOR
	02	C01Z C14Z
	04	E36A E36B
	06	G12A G16A G38A G38B
	21B	X06A X06B X06C
10.49.10↔		BORP MBOR VAC VAC I VAC II VBOR
	02	C01Z C14Z
	04	E36A E36B
	06	G12A G16A G38A G38B
	21B	X06A X06B X06C
10.49.99↔		BORP MBOR VAC VBOR
	02	C01Z C14Z
	04	E36A E36B
	06	G12A G16A G38A G38B
	21B	X06A X06B X06C
10.5X.00↔	02	C01Z C14Z
	21B	X06A X06B X06C
10.5X.10↔	02	C01Z C14Z
	21B	X06A X06B X06C
10.5X.99↔	02	C01Z C14Z
	21B	X06A X06B X06C
10.6X.00↔	02	C01Z C14Z
	21B	X06A X06B X06C
10.6X.10↔	02	C01Z C14Z
	21B	X06A X06B X06C
10.6X.99↔		BORP MBOR VAC VBOR
	02	C01Z C14Z
	04	E36A E36B
	06	G12A G16A G38A G38B
	21B	X06A X06B X06C
11.0↔		BORP MBOR VAC VBOR
	02	C01Z C04Z C29Z
	04	E36A E36B
	06	G12A G16A G38A G38B
	21B	X06A X06B X06C
11.1↔		BORP MBOR VAC VBOR
	02	C01Z C04Z C29Z
	04	E36A E36B
	06	G12A G16A G38A G38B
	21B	X06A X06B X06C
11.22.10‡↔		AKBB
	01	B60A
	02	C14Z
	16	Q86A
11.22.20↔	02	C01Z C04Z C29Z
	21B	X06A X06B X06C
11.22.99‡↔		AKBB
	01	B60A
	02	C14Z
	16	Q86A
11.31↔		BORP MBOR VAC VBOR
	02	C01Z C04Z C29Z
	04	E36A E36B
	06	G12A G16A G38A G38B
	21B	X06A X06B X06C
11.32↔		BORP MBOR VAC VAC I VAC II VBOR
	02	C01Z C04Z C29Z
	04	E36A E36B
	06	G12A G16A G38A G38B
	21B	X06A X06B X06C
11.39.00↔		BORP MBOR VAC VBOR
	02	C01Z C04Z C29Z
	04	E36A E36B
	06	G12A G16A G38A G38B
11.39.10↔		BORP MBOR VAC VAC I VAC II VBOR
	02	C01Z C04Z C29Z
	04	E36A E36B
	06	G12A G16A G38A G38B
11.39.11↔		BORP MBOR VAC VAC I VAC II VBOR
	02	C01Z C04Z C29Z
	04	E36A E36B
	06	G12A G16A G38A G38B
11.39.99↔		BORP MBOR VAC VBOR
	02	C01Z C04Z C29Z
	04	E36A E36B
	06	G12A G16A G38A G38B
11.41↔		BORP MBOR VAC VBOR
	02	C01Z C04Z C29Z
	04	E36A E36B
	06	G12A G16A G38A G38B
	21B	X06A X06B X06C
11.42↔		BORP MBOR VAC VBOR
	02	C01Z C04Z C29Z
	04	E36A E36B
	06	G12A G16A G38A G38B
	21B	X06A X06B X06C
11.43↔		BORP MBOR VAC VBOR
	02	C01Z C04Z C29Z
	04	E36A E36B
	06	G12A G16A G38A G38B
	21B	X06A X06B X06C
11.49.00↔		BORP MBOR VAC VBOR
	02	C01Z C04Z C29Z
	04	E36A E36B
	06	G12A G16A G38A G38B
	21B	X06A X06B X06C
11.49.10↔		BORP MBOR VAC VBOR
	02	C01Z C04Z C29Z
	04	E36A E36B
	06	G12A G16A G38A G38B
	21B	X06A X06B X06C
11.49.19↔	02	C01Z C04Z C29Z
	21B	X06A X06B X06C
11.49.20↔		BORP MBOR VAC VBOR
	02	C01Z C04Z C29Z
	04	E36A E36B
	06	G12A G16A G38A G38B
	21B	X06A X06B X06C
11.49.29↔		BORP MBOR VAC VBOR
	02	C01Z C04Z C29Z
	04	E36A E36B
	06	G12A G16A G38A G38B
	21B	X06A X06B X06C
11.49.99↔		BORP MBOR VAC VBOR
	02	C01Z C04Z C29Z
	04	E36A E36B
	06	G12A G16A G38A G38B
	21B	X06A X06B X06C
11.51↔		BORP MBOR VAC VBOR
	02	C01Z C04Z C29Z
	04	E36A E36B
	06	G12A G16A G38A G38B
	21B	X06A X06B X06C
11.52↔		BORP MBOR VAC VBOR
	02	C01Z C04Z C29Z
	04	E36A E36B
	06	G12A G16A G38A G38B
	21B	X06A X06B X06C
11.53↔		BORP MBOR VAC VAC I VAC II VBOR
	02	C01Z C04Z C29Z
	04	E36A E36B
	06	G12A G16A G38A G38B
	21B	X06A X06B X06C
11.59.00↔		BORP MBOR VAC VBOR
	02	C01Z C04Z C29Z
	04	E36A E36B
	06	G12A G16A G38A G38B
	21B	X06A X06B X06C
11.59.10↔		BORP MBOR VAC VBOR
	02	C01Z C04Z C29Z
	04	E36A E36B
	06	G12A G16A G38A

CHOP	MDC	DRG
		G38B
	21B	X06A X06B X06C
11.59.11↔		BORP MBOR VAC
		VAC I VAC II VBOR
	02	C01Z C04Z C29Z
	04	E36A E36B
	06	G12A G16A G38A
		G38B
	21B	X06A X06B X06C
11.59.12↔		BORP MBOR VAC
		VBOR
	02	C01Z C04Z C29Z
	04	E36A E36B
	06	G12A G16A G38A
		G38B
	21B	X06A X06B X06C
11.59.99↔		BORP MBOR VAC
		VBOR
	02	C01Z C04Z C29Z
	04	E36A E36B
	06	G12A G16A G38A
		G38B
	21B	X06A X06B X06C
11.60↔		BORP MBOR VAC
		VAC I VAC II VBOR
	02	C01Z C04Z C29Z
	04	E36A E36B
	06	G12A G16A G38A
		G38B
	21B	X06A X06B X06C
11.61↔		BORP MBOR VAC
		VAC I VAC II VBOR
	02	C01Z C04Z C29Z
	04	E36A E36B
	06	G12A G16A G38A
		G38B
	21B	X06A X06B X06C
11.62↔		BORP MBOR VAC
		VAC I VAC II VBOR
	02	C01Z C04Z C29Z
	04	E36A E36B
	06	G12A G16A G38A
		G38B
	21B	X06A X06B X06C
11.63↔		BORP MBOR VAC
		VAC I VAC II VBOR
	02	C01Z C04Z C29Z
	04	E36A E36B
	06	G12A G16A G38A
		G38B
	21B	X06A X06B X06C
11.64↔		BORP MBOR VAC
		VAC I VAC II VBOR
	02	C01Z C04Z C29Z
	04	E36A E36B
	06	G12A G16A G38A
		G38B
	21B	X06A X06B X06C
11.69.00↔		BORP MBOR VAC
		VAC I VAC II VBOR
	02	C01Z C04Z C29Z
	04	E36A E36B
	06	G12A G16A G38A
		G38B
	21B	X06A X06B X06C
11.69.10↔		BORP MBOR VAC
		VAC I VAC II VBOR
	02	C01Z C04Z C29Z
	04	E36A E36B
	06	G12A G16A G38A

CHOP	MDC	DRG
		G38B
	21B	X06A X06B X06C
11.69.20↔		BORP MBOR VAC
		VAC I VAC II VBOR
	02	C01Z C04Z C29Z
	04	E36A E36B
	06	G12A G16A G38A
		G38B
	21B	X06A X06B X06C
11.69.99↔		BORP MBOR VAC
		VAC I VAC II VBOR
	02	C01Z C04Z C29Z
	04	E36A E36B
	06	G12A G16A G38A
		G38B
	21B	X06A X06B X06C
11.71↔		BORP MBOR VAC
		VAC I VAC II VBOR
	02	C01Z C04Z C29Z
	04	E36A E36B
	06	G12A G16A G38A
		G38B
	21B	X06A X06B X06C
11.72↔		BORP MBOR VAC
		VAC I VAC II VBOR
	02	C01Z C04Z C29Z
	04	E36A E36B
	06	G12A G16A G38A
		G38B
	21B	X06A X06B X06C
11.73↔		BORP MBOR VAC
		VAC I VAC II VBOR
	02	C01Z C04Z C29Z
	04	E36A E36B
	06	G12A G16A G38A
		G38B
	21B	X06A X06B X06C
11.74↔		BORP MBOR VAC
		VBOR
	02	C01Z C04Z C29Z
	04	E36A E36B
	06	G12A G16A G38A
		G38B
	21B	X06A X06B X06C
11.75↔		BORP MBOR VAC
		VBOR
	02	C01Z C04Z C29Z
	04	E36A E36B
	06	G12A G16A G38A
		G38B
	21B	X06A X06B X06C
11.76↔		BORP MBOR VAC
		VAC I VAC II VBOR
	02	C01Z C04Z C29Z
	04	E36A E36B
	06	G12A G16A G38A
		G38B
	21B	X06A X06B X06C
11.79.00↔		BORP MBOR VAC
		VBOR
	02	C01Z C04Z C29Z
	04	E36A E36B
	06	G12A G16A G38A
		G38B
	21B	X06A X06B X06C
11.79.10↔		BORP MBOR VAC
		VAC I VAC II VBOR
	02	C01Z C04Z C29Z
	04	E36A E36B
	06	G12A G16A G38A

CHOP	MDC	DRG
		G38B
	21B	X06A X06B X06C
11.79.20↔		BORP MBOR VAC
		VAC I VAC II VBOR
	02	C01Z C04Z C29Z
	04	E36A E36B
	06	G12A G16A G38A
		G38B
	21B	X06A X06B X06C
11.79.99↔		BORP MBOR VAC
		VBOR
	02	C01Z C04Z C29Z
	04	E36A E36B
	06	G12A G16A G38A
		G38B
	21B	X06A X06B X06C
11.91↔		BORP MBOR VAC
		VBOR
	02	C01Z C04Z C29Z
	04	E36A E36B
	06	G12A G16A G38A
		G38B
	21B	X06A X06B X06C
11.92↔		BORP MBOR VAC
		VBOR
	02	C01Z C04Z C29Z
	04	E36A E36B
	06	G12A G16A G38A
		G38B
	21B	X06A X06B X06C
12.00↔		BORP MBOR VAC
		VBOR
	02	C01Z C03A C06A
		C06B
	04	E36A E36B
	06	G12A G16A G38A
		G38B
	21B	X06A X06B X06C
12.01↔		BORP MBOR VAC
		VBOR
	02	C01Z C03A C06A
		C06B
	04	E36A E36B
	06	G12A G16A G38A
		G38B
	21B	X06A X06B X06C
12.02↔		BORP MBOR VAC
		VBOR
	02	C01Z C03A C06A
		C06B
	04	E36A E36B
	06	G12A G16A G38A
		G38B
	21B	X06A X06B X06C
12.11↔		BORP MBOR VAC
		VAC I VAC II VBOR
	02	C01Z C03A C06A
		C06B
	04	E36A E36B
	06	G12A G16A G38A
		G38B
	21B	X06A X06B X06C
12.12↔		BORP MBOR VAC
		VBOR
	02	C01Z C03A C06A
		C06B
	04	E36A E36B
	06	G12A G16A G38A
		G38B
	21B	X06A X06B X06C

PROC

CHOP	MDC	DRG
12.13↔		BORP MBOR VAC VAC I VAC II VBOR
	02	C01Z C03A C06A C06B
	04	E36A E36B
	06	G12A G16A G38A G38B
	21B	X06A X06B X06C
12.14↔		BORP MBOR VAC VAC I VAC II VBOR
	02	C01Z C03A C06A C06B
	04	E36A E36B
	06	G12A G16A G38A G38B
	21B	X06A X06B X06C
12.21↔	02	C01Z C03A C06A C06B
	21B	X06A X06B X06C
12.22‡↔		AKBB
	01	B60A
	02	C14Z
	16	Q86A
12.29.10‡↔		AKBB
	01	B60A
	02	C14Z
	16	Q86A
12.29.20‡↔		AKBB
	01	B60A
	02	C14Z
	16	Q86A
12.29.30‡↔		AKBB
	01	B60A
	02	C14Z
	16	Q86A
12.31↔		BORP MBOR VAC VBOR
	02	C01Z C03A C06A C06B
	04	E36A E36B
	06	G12A G16A G38A G38B
	21B	X06A X06B X06C
12.32↔		BORP MBOR VAC VBOR
	02	C01Z C03A C06A C06B
	04	E36A E36B
	06	G12A G16A G38A G38B
	21B	X06A X06B X06C
12.33↔		BORP MBOR VAC VBOR
	02	C01Z C03A C06A C06B
	04	E36A E36B
	06	G12A G16A G38A G38B
	21B	X06A X06B X06C
12.34↔		BORP MBOR VAC VBOR
	02	C01Z C03A C06A C06B
	04	E36A E36B
	06	G12A G16A G38A G38B
	21B	X06A X06B X06C
12.35↔		BORP MBOR VAC VAC I VAC II VBOR
	02	C01Z C03A C06A C06B
	04	E36A E36B
	06	G12A G16A G38A G38B
	21B	X06A X06B X06C
12.36↔		BORP MBOR VAC VBOR
	02	C01Z C29Z
	04	E36A E36B
	06	G12A G16A G38A G38B
	21B	X06A X06B X06C
12.39.00↔		BORP MBOR VAC VBOR
	02	C01Z C03A C06A C06B
	04	E36A E36B
	06	G12A G16A G38A G38B
	21B	X06A X06B X06C
12.39.10↔		BORP MBOR VAC VAC I VAC II VBOR
	02	C01Z C03A C06A C06B
	04	E36A E36B
	06	G12A G16A G38A G38B
	21B	X06A X06B X06C
12.39.99↔		BORP MBOR VAC VBOR
	02	C01Z C03A C06A C06B
	04	E36A E36B
	06	G12A G16A G38A G38B
	21B	X06A X06B X06C
12.40↔		BORP MBOR VAC VBOR
	02	C01Z C03A C06A C06B
	04	E36A E36B
	06	G12A G16A G38A G38B
	21B	X06A X06B X06C
12.41↔		BORP MBOR VAC VBOR
	02	C01Z C03A C06A C06B
	04	E36A E36B
	06	G12A G16A G38A G38B
	21B	X06A X06B X06C
12.42↔		BORP MBOR VAC VBOR
	02	C01Z C03A C06A C06B
	04	E36A E36B
	06	G12A G16A G38A G38B
	21B	X06A X06B X06C
12.43↔		BORP MBOR VAC VAC I VAC II VBOR
	02	C01Z C03A C06A C06B
	04	E36A E36B
	06	G12A G16A G38A G38B
	21B	X06A X06B X06C
12.44↔		BORP MBOR VAC VAC I VAC II VBOR
	02	C01Z C03A C06A C06B
	04	E36A E36B
	06	G12A G16A G38A G38B
	21B	X06A X06B X06C
12.51↔		BORP MBOR VAC VBOR
	02	C01Z C03A C06A C06B
	04	E36A E36B
	06	G12A G16A G38A G38B
	10	K09A K09B
	21B	X06A X06B X06C
12.52↔		BORP MBOR VAC VBOR
	02	C01Z C03A C06A C06B
	04	E36A E36B
	06	G12A G16A G38A G38B
	21B	X06A X06B X06C
12.53↔		BORP MBOR VAC VBOR
	02	C01Z C03A C06A C06B
	04	E36A E36B
	06	G12A G16A G38A G38B
	21B	X06A X06B X06C
12.54↔		BORP MBOR VAC VAC I VAC II VBOR
	02	C01Z C03A C06A C06B
	04	E36A E36B
	06	G12A G16A G38A G38B
	10	K09A K09B
	21B	X06A X06B X06C
12.55↔		BORP MBOR VAC VBOR
	02	C01Z C03A C06A C06B
	04	E36A E36B
	06	G12A G16A G38A G38B
	10	K09A K09B
12.59.00↔		BORP MBOR VAC VBOR
	02	C01Z C03A C06A C06B
	04	E36A E36B
	06	G12A G16A G38A G38B
	10	K09A K09B
	21B	X06A X06B X06C
12.59.10↔		BORP MBOR VAC VAC I VAC II VBOR
	02	C01Z C03A C06A C06B
	04	E36A E36B
	06	G12A G16A G38A G38B
	10	K09A K09B
	21B	X06A X06B X06C
12.59.11↔		BORP MBOR VAC VAC I VAC II VBOR
	02	C01Z C03A C06A C06B

CHOP	MDC	DRG
	04	E36A E36B
	06	G12A G16A G38A G38B
	10	K09A K09B
	21B	X06A X06B X06C
12.59.99↔		BORP MBOR VAC VBOR
	02	C01Z C03A C06A C06B
	04	E36A E36B
	06	G12A G16A G38A G38B
	10	K09A K09B
	21B	X06A X06B X06C
12.61.00↔		BORP MBOR VAC VAC I VAC II VBOR
	02	C01Z C03A C06A C06B
	04	E36A E36B
	06	G12A G16A G38A G38B
	10	K09A K09B
	21B	X06A X06B X06C
12.61.10↔		BORP MBOR VAC VAC I VAC II VBOR
	02	C01Z C03A C06A C06B
	04	E36A E36B
	06	G12A G16A G38A G38B
	10	K09A K09B
	21B	X06A X06B X06C
12.61.11↔		BORP MBOR VAC VAC I VAC II VBOR
	02	C01Z C03A C06A C06B
	04	E36A E36B
	06	G12A G16A G38A G38B
	10	K09A K09B
	21B	X06A X06B X06C
12.61.99↔		BORP MBOR VAC VAC I VAC II VBOR
	02	C01Z C03A C06A C06B
	04	E36A E36B
	06	G12A G16A G38A G38B
	10	K09A K09B
	21B	X06A X06B X06C
12.62↔		BORP MBOR VAC VAC I VAC II VBOR
	02	C01Z C03A C06A C06B
	04	E36A E36B
	06	G12A G16A G38A G38B
	21B	X06A X06B X06C
12.63↔		BORP MBOR VAC VAC I VAC II VBOR
	02	C01Z C03A C06A C06B
	04	E36A E36B
	06	G12A G16A G38A G38B
	21B	X06A X06B X06C
12.64.00↔		BORP MBOR VAC VAC I VAC II VBOR
	02	C01Z C03A C06A C06B
	04	E36A E36B
	06	G12A G16A G38A G38B
	10	K09A K09B
	21B	X06A X06B X06C
12.64.10↔		BORP MBOR VAC VAC I VAC II VBOR
	02	C01Z C03A C06A C06B
	04	E36A E36B
	06	G12A G16A G38A G38B
	10	K09A K09B
	21B	X06A X06B X06C
12.64.11↔		BORP MBOR VAC VAC I VAC II VBOR
	02	C01Z C03A C06A C06B
	04	E36A E36B
	06	G12A G16A G38A G38B
	10	K09A K09B
	21B	X06A X06B X06C
12.64.99↔		BORP MBOR VAC VAC I VAC II VBOR
	02	C01Z C03A C06A C06B
	04	E36A E36B
	06	G12A G16A G38A G38B
	10	K09A K09B
	21B	X06A X06B X06C
12.65↔		BORP MBOR VAC VAC I VAC II VBOR
	02	C01Z C03A C06A C06B
	04	E36A E36B
	06	G12A G16A G38A G38B
	21B	X06A X06B X06C
12.66↔		BORP MBOR VAC VAC I VAC II VBOR
	02	C01Z C03A C06A C06B
	04	E36A E36B
	06	G12A G16A G38A G38B
	21B	X06A X06B X06C
12.69.00↔		BORP MBOR VAC VBOR
	02	C01Z C03A C06A C06B
	04	E36A E36B
	06	G12A G16A G38A G38B
	21B	X06A X06B X06C
12.69.10↔		BORP MBOR VAC VAC I VAC II VBOR
	02	C01Z C03A C06A C06B
	04	E36A E36B
	06	G12A G16A G38A G38B
	21B	X06A X06B X06C
12.69.99↔		BORP MBOR VAC VBOR
	02	C01Z C03A C06A C06B
	04	E36A E36B
	06	G12A G16A G38A G38B
	21B	X06A X06B X06C
12.71↔		BORP MBOR VAC VAC I VAC II VBOR
	02	C01Z C03A C06A C06B
	04	E36A E36B
	06	G12A G16A G38A G38B
	10	K09A K09B
12.72↔		BORP MBOR VAC VAC I VAC II VBOR
	02	C01Z C03A C06A C06B
	04	E36A E36B
	06	G12A G16A G38A G38B
	10	K09A K09B
12.73↔		BORP MBOR VAC VAC I VAC II VBOR
	02	C01Z C03A C06A C06B
	04	E36A E36B
	06	G12A G16A G38A G38B
	10	K09A K09B
12.74↔		BORP MBOR VAC VAC I VAC II VBOR
	02	C01Z C03A C06A C06B
	04	E36A E36B
	06	G12A G16A G38A G38B
	10	K09A K09B
12.79.00↔		BORP MBOR VAC VBOR
	02	C01Z C03A C06A C06B
	04	E36A E36B
	06	G12A G16A G38A G38B
	10	K09A K09B
12.79.10↔		BORP MBOR VAC VAC I VAC II VBOR
	02	C01Z C03A C06A C06B
	04	E36A E36B
	06	G12A G16A G38A G38B
	10	K09A K09B
12.79.11↔		BORP MBOR VAC VAC I VAC II VBOR
	02	C01Z C03A C06A C06B
	04	E36A E36B
	06	G12A G16A G38A G38B
	10	K09A K09B
12.79.20↔		BORP MBOR VAC VAC I VAC II VBOR
	02	C01Z C03A C06A
	04	E36A E36B
	06	G12A G16A G38A G38B
	10	K09A K09B
12.79.99↔		BORP MBOR VAC VAC I VAC II VBOR
	02	C01Z C03A C06A C06B
	04	E36A E36B

PROC

PROC

CHOP	MDC	DRG
	06	G12A G16A G38A G38B
	10	K09A K09B
12.81↔		BORP MBOR VAC VAC I VAC II VBOR
	02	C01Z C03A C06A C06B
	04	E36A E36B
	06	G12A G16A G38A G38B
	21B	X06A X06B X06C
12.82↔		BORP MBOR VAC VAC I VAC II VBOR
	02	C01Z C03A C06A C06B
	04	E36A E36B
	06	G12A G16A G38A G38B
	21B	X06A X06B X06C
12.83↔		BORP MBOR VAC VAC I VAC II VBOR
	02	C01Z C03A C06A C06B
	04	E36A E36B
	06	G12A G16A G38A G38B
	21B	X06A X06B X06C
12.84↔		BORP MBOR VAC VBOR
	02	C01Z C03A C06A C06B
	04	E36A E36B
	06	G12A G16A G38A G38B
	21B	X06A X06B X06C
12.85↔		BORP MBOR VAC VAC I VAC II VBOR
	02	C01Z C03A C06A C06B
	04	E36A E36B
	06	G12A G16A G38A G38B
	21B	X06A X06B X06C
12.86↔		BORP MBOR VAC VBOR
	02	C01Z C03A C06A C06B
	04	E36A E36B
	06	G12A G16A G38A G38B
	21B	X06A X06B X06C
12.87↔		BORP MBOR VAC VAC I VAC II VBOR
	02	C01Z C03A C06A C06B
	04	E36A E36B
	06	G12A G16A G38A G38B
	21B	X06A X06B X06C
12.88↔		BORP MBOR VAC VBOR
	02	C01Z C03A C06A C06B
	04	E36A E36B
	06	G12A G16A G38A G38B
	21B	X06A X06B X06C
12.89↔		BORP MBOR VAC VBOR
	02	C01Z C03A C06A C06B
	04	E36A E36B
	06	G12A G16A G38A G38B
	21B	X06A X06B X06C
12.91.00↔		BORP MBOR VAC VAC I VAC II VBOR
	02	C01Z C03A C06A C06B
	04	E36A E36B
	06	G12A G16A G38A G38B
	21B	X06A X06B X06C
12.91.10↔		BORP MBOR VAC VBOR
	02	C01Z C03A C06A C06B
	04	E36A E36B
	06	G12A G16A G38A G38B
	21B	X06A X06B X06C
12.91.11↔		BORP MBOR VAC VBOR
	02	C01Z C03A C06A C06B
	04	E36A E36B
	06	G12A G16A G38A G38B
	21B	X06A X06B X06C
12.91.19↔		BORP MBOR VAC VBOR
	02	C01Z C03A C06A C06B
	04	E36A E36B
	06	G12A G16A G38A G38B
	21B	X06A X06B X06C
12.91.20↔		BORP MBOR VAC VBOR
	02	C01Z C03A C06A C06B
	04	E36A E36B
	06	G12A G16A G38A G38B
	21B	X06A X06B X06C
12.91.99↔		BORP MBOR VAC VBOR
	02	C01Z C03A C06A C06B
	04	E36A E36B
	06	G12A G16A G38A G38B
	21B	X06A X06B X06C
12.92.09↔		BORP MBOR VAC VBOR
	02	C01Z C03A C06A C06B
	04	E36A E36B
	06	G12A G16A G38A G38B
	21B	X06A X06B X06C
12.92.21↔		BORP MBOR VAC VBOR
	02	C01Z C03A C06A C06B
	04	E36A E36B
	06	G12A G16A G38A G38B
	21B	X06A X06B X06C
12.92.29↔		BORP MBOR VAC VBOR
	02	C01Z C03A C06A C06B
	04	E36A E36B
	06	G12A G16A G38A G38B
	21B	X06A X06B X06C
12.93↔		BORP MBOR VAC VBOR
	02	C01Z C03A C06A C06B
	04	E36A E36B
	06	G12A G16A G38A G38B
	21B	X06A X06B X06C
12.97↔		BORP MBOR VAC VBOR
	02	C01Z C03A C06A C06B
	04	E36A E36B
	06	G12A G16A G38A G38B
	21B	X06A X06B X06C
12.98.00↔		BORP MBOR VAC VBOR
	02	C01Z C03A C06A C06B
	04	E36A E36B
	06	G12A G16A G38A G38B
	21B	X06A X06B X06C
12.98.10↔		BORP MBOR VAC VAC I VAC II VBOR
	02	C01Z C03A C06A C06B
	04	E36A E36B
	06	G12A G16A G38A G38B
	21B	X06A X06B X06C
12.98.99↔		BORP MBOR VAC VBOR
	02	C01Z C03A C06A C06B
	04	E36A E36B
	06	G12A G16A G38A G38B
	21B	X06A X06B X06C
12.99.00↔		BORP MBOR VAC VBOR
	02	C01Z C03A C06A C06B
	04	E36A E36B
	06	G12A G16A G38A G38B
	21B	X06A X06B X06C
12.99.99↔		BORP MBOR VAC VBOR
	02	C01Z C03A C06A C06B
	04	E36A E36B
	06	G12A G16A G38A G38B
	21B	X06A X06B X06C
13.00↔		BORP MBOR VAC VBOR
	02	C01Z C08A C08B C29Z
	04	E36A E36B
	06	G12A G16A G38A G38B

CHOP	MDC	DRG
	21B	X06A X06B X06C
13.01↔		BORP MBOR VAC VBOR
	02	C01Z C08A C08B C29Z
	04	E36A E36B
	06	G12A G16A G38A G38B
	21B	X06A X06B X06C
13.02↔		BORP MBOR VAC VBOR
	02	C01Z C08A C08B C29Z
	04	E36A E36B
	06	G12A G16A G38A G38B
	21B	X06A X06B X06C
13.11↔		BORP MBOR VAC VAC I VAC II VBOR
	02	C01Z C08A C08B C29Z
	04	E36A E36B
	06	G12A G16A G38A G38B
	10	K09A K09B
13.19↔		BORP MBOR VAC VAC I VAC II VBOR
	02	C01Z C08A C08B C29Z
	04	E36A E36B
	06	G12A G16A G38A G38B
	10	K09A K09B
13.2↔		BORP MBOR VAC VAC I VAC II VBOR
	02	C01Z C08A C08B C29Z
	04	E36A E36B
	06	G12A G16A G38A G38B
	10	K09A K09B
	21B	X06A X06B X06C
13.3↔		BORP MBOR VAC VAC I VAC II VBOR
	02	C01Z C08A C08B C29Z
	04	E36A E36B
	06	G12A G16A G38A G38B
	10	K09A K09B
	21B	X06A X06B X06C
13.41↔		BORP MBOR VAC VAC I VAC II VBOR
	02	C01Z C08A C08B C29Z
	04	E36A E36B
	06	G12A G16A G38A G38B
	10	K09A K09B
	21B	X06A X06B X06C
13.42↔		BORP MBOR VAC VAC I VAC II VBOR
	02	C01Z C08A C08B C29Z
	04	E36A E36B
	06	G12A G16A G38A G38B
	10	K09A K09B
	21B	X06A X06B X06C
13.43↔		BORP MBOR VAC VAC I VAC II VBOR
	02	C01Z C08A C08B C29Z
	04	E36A E36B
	06	G12A G16A G38A G38B
	10	K09A K09B
	21B	X06A X06B X06C
13.51↔		BORP MBOR VAC VAC I VAC II VBOR
	02	C01Z C08A C08B C29Z
	04	E36A E36B
	06	G12A G16A G38A G38B
	10	K09A K09B
13.59↔		BORP MBOR VAC VAC I VAC II VBOR
	02	C01Z C08A C08B C29Z
	04	E36A E36B
	06	G12A G16A G38A G38B
	10	K09A K09B
	21B	X06A X06B X06C
13.64↔		BORP MBOR VAC VAC I VAC II VBOR
	02	C01Z C08A C08B C29Z
	04	E36A E36B
	06	G12A G16A G38A G38B
13.65↔		BORP MBOR VAC VAC I VAC II VBOR
	02	C01Z C08A C08B C29Z
	04	E36A E36B
	06	G12A G16A G38A G38B
13.66↔		BORP MBOR VAC VAC I VAC II VBOR
	02	C01Z C08A C08B C29Z
	04	E36A E36B
	06	G12A G16A G38A G38B
13.69↔		BORP MBOR VAC VAC I VAC II VBOR
	02	C01Z C08A C08B C29Z
	04	E36A E36B
	06	G12A G16A G38A G38B
	10	K09A K09B
13.71↔		BORP MBOR VAC VAC I VAC II VBOR
	02	C01Z C08A C08B C29Z
	04	E36A E36B
	06	G12A G16A G38A G38B
	21B	X06A X06B X06C
13.72↔		BORP MBOR VAC VAC I VAC II VBOR
	02	C01Z C08A C08B C29Z
	04	E36A E36B
	06	G12A G16A G38A G38B
	21B	X06A X06B X06C
13.73↔		BORP MBOR VAC VAC I VAC II VBOR
	02	C01Z C08A C08B C29Z
	04	E36A E36B
	06	G12A G16A G38A G38B
	21B	X06A X06B X06C
13.79↔		BORP MBOR VAC VAC I VAC II VBOR
	02	C01Z C08A C08B C29Z
	04	E36A E36B
	06	G12A G16A G38A G38B
	21B	X06A X06B X06C
13.8↔		BORP MBOR VAC VAC I VAC II VBOR
	02	C01Z C08A C08B C29Z
	04	E36A E36B
	06	G12A G16A G38A G38B
	10	K09A K09B
	21B	X06A X06B X06C
13.91↔		BORP MBOR VAC VAC I VAC II VBOR
	02	C01Z C08A C08B C29Z
	04	E36A E36B
	06	G12A G16A G38A G38B
	21B	X06A X06B X06C
13.92↔		BORP MBOR VAC VAC I VAC II VBOR
	02	C01Z C08A C08B C29Z
	04	E36A E36B
	06	G12A G16A G38A G38B
	21B	X06A X06B X06C
13.93↔		BORP MBOR VAC VBOR
	02	C01Z C08A C08B C29Z
	04	E36A E36B
	06	G12A G16A G38A G38B
	21B	X06A X06B X06C
13.99↔		BORP MBOR VAC VAC I VAC II VBOR
	02	C01Z C08A C08B C29Z
	04	E36A E36B
	06	G12A G16A G38A G38B
	21B	X06A X06B X06C
14.00↔		BORP MBOR VAC VBOR
	02	C01Z C03A C03B C29Z
	04	E36A E36B
	06	G12A G16A G38A G38B
	21B	X06A X06B X06C
14.01↔		BORP MBOR VAC VBOR
	02	C01Z C03A C03B C29Z
	04	E36A E36B

PROC

CHOP	MDC	DRG
	06	G12A G16A G38A G38B
	21B	X06A X06B X06C
14.02↔		BORP MBOR VAC VBOR
	02	C01Z C03A C03B C29Z
	04	E36A E36B
	06	G12A G16A G38A G38B
	21B	X06A X06B X06C
14.11↔	02	C01Z C03A C03B C29Z
14.21↔		BORP MBOR VAC VBOR
	02	C01Z C03A C03B C29Z
	04	E36A E36B
	06	G12A G16A G38A G38B
14.22↔		BORP MBOR VAC VBOR
	02	C01Z C03A C03B C29Z
	04	E36A E36B
	06	G12A G16A G38A G38B
14.23↔		BORP MBOR VAC VBOR
	02	C01Z C03A C03B C29Z
	04	E36A E36B
	06	G12A G16A G38A G38B
14.24↔		BORP MBOR VAC VBOR
	02	C01Z C03A C03B C29Z
	04	E36A E36B
	06	G12A G16A G38A G38B
14.25↔		BORP MBOR VAC VBOR
	02	C01Z C03A C03B C29Z
	04	E36A E36B
	06	G12A G16A G38A G38B
14.26↔		BORP MBOR VAC VAC I VAC II VBOR
	02	C01Z C03A C03B C29Z
	04	E36A E36B
	06	G12A G16A G38A G38B
	21B	X06A X06B X06C
14.27↔		BORP MBOR VAC VAC I VAC II VBOR
	02	C01Z C03A C03B C29Z
	04	E36A E36B
	06	G12A G16A G38A G38B
	21B	X06A X06B X06C
14.29↔		BORP MBOR VAC VBOR
	02	C01Z C03A C03B C29Z
	04	E36A E36B
	06	G12A G16A G38A G38B
14.31↔		BORP MBOR VAC VBOR
	02	C01Z C03A C03B C29Z
	04	E36A E36B
	06	G12A G16A G38A G38B
	21B	X06A X06B X06C
14.32↔		BORP MBOR VAC VBOR
	02	C01Z C03A C03B C29Z
	04	E36A E36B
	06	G12A G16A G38A G38B
	21B	X06A X06B X06C
14.33↔		BORP MBOR VAC VBOR
	02	C01Z C03A C03B C29Z
	04	E36A E36B
	06	G12A G16A G38A G38B
	21B	X06A X06B X06C
14.34↔		BORP MBOR VAC VBOR
	02	C01Z C03A C03B C29Z
	04	E36A E36B
	06	G12A G16A G38A G38B
	21B	X06A X06B X06C
14.35↔		BORP MBOR VAC VBOR
	02	C01Z C03A C03B C29Z
	04	E36A E36B
	06	G12A G16A G38A G38B
	21B	X06A X06B X06C
14.39.00↔		BORP MBOR VAC VBOR
	02	C01Z C03A C03B C29Z
	04	E36A E36B
	06	G12A G16A G38A G38B
	21B	X06A X06B X06C
14.39.10↔		BORP MBOR VAC VBOR
	02	C01Z C03A C03B C29Z
	04	E36A E36B
	06	G12A G16A G38A G38B
	21B	X06A X06B X06C
14.39.99↔		BORP MBOR VAC VBOR
	02	C01Z C03A C03B C29Z
	04	E36A E36B
	06	G12A G16A G38A G38B
	21B	X06A X06B X06C
14.41↔		BORP MBOR VAC VBOR
	02	C01Z C03A C03B C29Z
	04	E36A E36B
	06	G12A G16A G38A G38B
	10	K09A K09B
	21B	X06A X06B X06C
14.49↔		BORP MBOR VAC VBOR
	02	C01Z C03A C03B C29Z
	04	E36A E36B
	06	G12A G16A G38A G38B
	10	K09A K09B
	21B	X06A X06B X06C
14.51↔		BORP MBOR VAC VAC I VAC II VBOR
	02	C01Z C03A C03B C29Z
	04	E36A E36B
	06	G12A G16A G38A G38B
	21B	X06A X06B X06C
14.52↔		BORP MBOR VAC VAC I VAC II VBOR
	02	C01Z C03A C03B C29Z
	04	E36A E36B
	06	G12A G16A G38A G38B
	21B	X06A X06B X06C
14.53↔		BORP MBOR VAC VAC I VAC II VBOR
	02	C01Z C03A C03B C29Z
	04	E36A E36B
	06	G12A G16A G38A G38B
	21B	X06A X06B X06C
14.54↔		BORP MBOR VAC VAC I VAC II VBOR
	02	C01Z C03A C03B C29Z
	04	E36A E36B
	06	G12A G16A G38A G38B
	21B	X06A X06B X06C
14.55↔		BORP MBOR VAC VAC I VAC II VBOR
	02	C01Z C03A C03B C29Z
	04	E36A E36B
	06	G12A G16A G38A G38B
	21B	X06A X06B X06C
14.59.00↔		BORP MBOR VAC VBOR
	02	C01Z C03A C03B C29Z
	04	E36A E36B
	06	G12A G16A G38A G38B
	21B	X06A X06B X06C
14.59.10↔		BORP MBOR VAC VBOR
	02	C01Z C03A C03B C29Z
	04	E36A E36B
	06	G12A G16A G38A G38B
	21B	X06A X06B X06C
14.59.11↔		BORP MBOR VAC

CHOP	MDC	DRG
		VBOR
	02	C01Z C03A C03B C29Z
	04	E36A E36B
	06	G12A G16A G38A G38B
	21B	X06A X06B X06C
14.59.99↔		BORP MBOR VAC VBOR
	02	C01Z C03A C03B C29Z
	04	E36A E36B
	06	G12A G16A G38A G38B
	21B	X06A X06B X06C
14.6X.00↔		BORP MBOR VAC VBOR
	02	C01Z C03A C03B C29Z
	04	E36A E36B
	06	G12A G16A G38A G38B
	10	K09A K09B
	21B	X06A X06B X06C
14.6X.10↔		BORP MBOR VAC VBOR
	02	C01Z C03A C03B C29Z
	04	E36A E36B
	06	G12A G16A G38A G38B
	10	K09A K09B
	21B	X06A X06B X06C
14.6X.20↔		BORP MBOR VAC VBOR
	02	C01Z C03A C03B C29Z
	04	E36A E36B
	06	G12A G16A G38A G38B
	10	K09A K09B
	21B	X06A X06B X06C
14.6X.99↔		BORP MBOR VAC VBOR
	02	C01Z C03A C03B C29Z
	04	E36A E36B
	06	G12A G16A G38A G38B
	10	K09A K09B
	21B	X06A X06B X06C
14.71.00↔		BORP MBOR VAC VAC I VAC II VBOR
	02	C01Z C03A C03B C29Z
	04	E36A E36B
	06	G12A G16A G38A G38B
	10	K09A K09B
	21B	X06A X06B X06C
14.71.10↔		BORP MBOR VAC VAC I VAC II VBOR
	02	C01Z C03A C03B C29Z
	04	E36A E36B
	06	G12A G16A G38A G38B
	10	K09A K09B
	21B	X06A X06B X06C
14.71.19↔		BORP MBOR VAC VAC I VAC II VBOR
	02	C01Z C03A C03B C29Z
	04	E36A E36B
	06	G12A G16A G38A G38B
	10	K09A K09B
	21B	X06A X06B X06C
14.71.99↔		BORP MBOR VAC VAC I VAC II VBOR
	02	C01Z C03A C03B C29Z
	04	E36A E36B
	06	G12A G16A G38A G38B
	10	K09A K09B
	21B	X06A X06B X06C
14.72↔		BORP MBOR VAC VAC I VAC II VBOR
	02	C01Z C03A C03B C29Z
	04	E36A E36B
	06	G12A G16A G38A G38B
	21B	X06A X06B X06C
14.73.00↔		BORP MBOR VAC VAC I VAC II VBOR
	02	C01Z C03A C03B C29Z
	04	E36A E36B
	06	G12A G16A G38A G38B
	10	K09A K09B
	21B	X06A X06B X06C
14.73.10↔		BORP MBOR VAC VAC I VAC II VBOR
	02	C01Z C03A C03B C29Z
	04	E36A E36B
	06	G12A G16A G38A G38B
	10	K09A K09B
	21B	X06A X06B X06C
14.73.19↔		BORP MBOR VAC VAC I VAC II VBOR
	02	C01Z C03A C03B C29Z
	04	E36A E36B
	06	G12A G16A G38A G38B
	10	K09A K09B
	21B	X06A X06B X06C
14.73.99↔		BORP MBOR VAC VAC I VAC II VBOR
	02	C01Z C03A C03B C29Z
	04	E36A E36B
	06	G12A G16A G38A G38B
	10	K09A K09B
	21B	X06A X06B X06C
14.74↔		BORP MBOR VAC VAC I VAC II VBOR
	02	C01Z C03A C03B C29Z
	04	E36A E36B
	06	G12A G16A G38A G38B
	21B	X06A X06B X06C
14.79↔	02	C01Z C03A C03B C29Z
	10	K09A K09B
	21B	X06A X06B X06C
14.9X.00↔		BORP MBOR VAC VBOR
	02	C01Z C03A C03B C29Z
	04	E36A E36B
	06	G12A G16A G38A G38B
	21B	X06A X06B X06C
14.9X.10↔		BORP MBOR VAC VBOR
	02	C01Z C03A C03B C29Z
	04	E36A E36B
	06	G12A G16A G38A G38B
	21B	X06A X06B X06C
14.9X.11↔		BORP MBOR VAC VAC I VAC II VBOR
	02	C01Z C03A C03B C29Z
	04	E36A E36B
	06	G12A G16A G38A G38B
	21B	X06A X06B X06C
14.9X.12↔		BORP MBOR VAC VAC I VAC II VBOR
	02	C01Z C03A C03B C29Z
	04	E36A E36B
	06	G12A G16A G38A G38B
	21B	X06A X06B X06C
14.9X.13↔		BORP MBOR VAC VAC I VAC II VBOR
	02	C01Z C03A C03B C29Z
	04	E36A E36B
	06	G12A G16A G38A G38B
	21B	X06A X06B X06C
14.9X.14↔		BORP MBOR VAC VAC I VAC II VBOR
	02	C01Z C03A C03B C29Z
	04	E36A E36B
	06	G12A G16A G38A G38B
	21B	X06A X06B X06C
14.9X.15↔		BORP MBOR VAC VAC I VAC II VBOR
	02	C01Z C03A C03B C29Z
	04	E36A E36B
	06	G12A G16A G38A G38B
	21B	X06A X06B X06C
14.9X.16↔		BORP MBOR VAC VAC I VAC II VBOR
	02	C01Z C03A C03B C29Z
	04	E36A E36B
	06	G12A G16A G38A G38B
	21B	X06A X06B X06C
14.9X.20↔		BORP MBOR VAC VAC I VAC II VBOR
	02	C01Z C03A C03B

PROC

PROC

CHOP	MDC	DRG
		C29Z
	04	E36A E36B
	06	G12A G16A G38A G38B
	21B	X06A X06B X06C
14.9X.21↔		BORP MBOR VAC VBOR
	02	C01Z C03A C03B C29Z
	04	E36A E36B
	06	G12A G16A G38A G38B
	21B	X06A X06B X06C
14.9X.22↔		BORP MBOR VAC VBOR
	02	C01Z C03A C03B C29Z
	04	E36A E36B
	06	G12A G16A G38A G38B
	21B	X06A X06B X06C
14.9X.23↔		BORP MBOR VAC VBOR
	02	C01Z C03A C03B C29Z
	04	E36A E36B
	06	G12A G16A G38A G38B
	21B	X06A X06B X06C
14.9X.99↔		BORP MBOR VAC VBOR
	02	C01Z C03A C03B C29Z
	04	E36A E36B
	06	G12A G16A G38A G38B
	21B	X06A X06B X06C
15.01‡↔		AKBB
	01	B60A
	02	C14Z
	16	Q86A
15.11.00↔		BORP MBOR VAC VAC I VAC II VBOR
	02	C01Z C10Z
	04	E36A E36B
	06	G12A G16A G38A G38B
	10	K09A K09B
15.11.10↔		BORP MBOR VAC VAC I VAC II VBOR
	02	C01Z C10Z
	04	E36A E36B
	06	G12A G16A G38A G38B
	10	K09A K09B
15.11.11↔		BORP MBOR VAC VAC I VAC II VBOR
	02	C01Z C10Z
	04	E36A E36B
	06	G12A G16A G38A G38B
	10	K09A K09B
15.11.99↔		BORP MBOR VAC VAC I VAC II VBOR
	02	C01Z C10Z
	04	E36A E36B
	06	G12A G16A G38A G38B
	10	K09A K09B
15.12.00↔		BORP MBOR VAC VAC I VAC II VBOR
	02	C01Z C10Z
	04	E36A E36B
	06	G12A G16A G38A G38B
	10	K09A K09B
15.12.10↔		BORP MBOR VAC VAC I VAC II VBOR
	02	C01Z C10Z
	04	E36A E36B
	06	G12A G16A G38A G38B
	10	K09A K09B
15.12.11↔		BORP MBOR VAC VAC I VAC II VBOR
	02	C01Z C10Z
	04	E36A E36B
	06	G12A G16A G38A G38B
	10	K09A K09B
15.12.99↔		BORP MBOR VAC VAC I VAC II VBOR
	02	C01Z C10Z
	04	E36A E36B
	06	G12A G16A G38A G38B
	10	K09A K09B
15.13.00↔		BORP MBOR VAC VAC I VAC II VBOR
	02	C01Z C10Z
	04	E36A E36B
	06	G12A G16A G38A G38B
	10	K09A K09B
15.13.10↔		BORP MBOR VAC VAC I VAC II VBOR
	02	C01Z C10Z
	04	E36A E36B
	06	G12A G16A G38A G38B
	10	K09A K09B
15.13.11↔		BORP MBOR VAC VAC I VAC II VBOR
	02	C01Z C10Z
	04	E36A E36B
	06	G12A G16A G38A G38B
	10	K09A K09B
15.13.99↔		BORP MBOR VAC VAC I VAC II VBOR
	02	C01Z C10Z
	04	E36A E36B
	06	G12A G16A G38A G38B
	10	K09A K09B
15.19.00↔		BORP MBOR VAC VBOR
	02	C01Z C10Z
	04	E36A E36B
	06	G12A G16A G38A G38B
	10	K09A K09B
15.19.10↔		BORP MBOR VAC VAC I VAC II VBOR
	02	C01Z C10Z
	04	E36A E36B
	06	G12A G16A G38A G38B
	10	K09A K09B
15.19.11↔		BORP MBOR VAC VAC I VAC II VBOR
	02	C01Z C10Z
	04	E36A E36B
	06	G12A G16A G38A G38B
	10	K09A K09B
15.19.12↔		BORP MBOR VAC VAC I VAC II VBOR
	02	C01Z C10Z
	04	E36A E36B
	06	G12A G16A G38A G38B
	10	K09A K09B
15.19.19↔		BORP MBOR VAC VAC I VAC II VBOR
	02	C01Z C10Z
	04	E36A E36B
	06	G12A G16A G38A G38B
	10	K09A K09B
15.19.20↔		BORP MBOR VAC VAC I VAC II VBOR
	02	C01Z C10Z
	04	E36A E36B
	06	G12A G16A G38A G38B
	10	K09A K09B
15.19.21↔		BORP MBOR VAC VAC I VAC II VBOR
	02	C01Z C10Z
	04	E36A E36B
	06	G12A G16A G38A G38B
	10	K09A K09B
15.19.22↔		BORP MBOR VAC VAC I VAC II VBOR
	02	C01Z C10Z
	04	E36A E36B
	06	G12A G16A G38A G38B
	10	K09A K09B
15.19.29↔		BORP MBOR VAC VAC I VAC II VBOR
	02	C01Z C10Z
	04	E36A E36B
	06	G12A G16A G38A G38B
	10	K09A K09B
15.19.30↔		BORP MBOR VAC VAC I VAC II VBOR
	02	C01Z C10Z
	04	E36A E36B
	06	G12A G16A G38A G38B
	10	K09A K09B
15.19.40↔		BORP MBOR VAC VBOR
	02	C01Z C10Z
	04	E36A E36B
	06	G12A G16A G38A G38B
	10	K09A K09B
15.19.99↔		BORP MBOR VAC VAC I VAC II VBOR
	02	C01Z C10Z
	04	E36A E36B
	06	G12A G16A G38A G38B
	10	K09A K09B
15.21.00↔		BORP MBOR VAC

CHOP	MDC	DRG
		VAC I VAC II VBOR
	02	C01Z C10Z
	04	E36A E36B
	06	G12A G16A G38A G38B
	10	K09A K09B
15.21.10↔		BORP MBOR VAC VAC I VAC II VBOR
	02	C01Z C10Z
	04	E36A E36B
	06	G12A G16A G38A G38B
	10	K09A K09B
15.21.11↔		BORP MBOR VAC VAC I VAC II VBOR
	02	C01Z C10Z
	04	E36A E36B
	06	G12A G16A G38A G38B
	10	K09A K09B
15.21.99↔		BORP MBOR VAC VAC I VAC II VBOR
	02	C01Z C10Z
	04	E36A E36B
	06	G12A G16A G38A G38B
	10	K09A K09B
15.22.00↔		BORP MBOR VAC VAC I VAC II VBOR
	02	C01Z C10Z
	04	E36A E36B
	06	G12A G16A G38A G38B
	10	K09A K09B
15.22.10↔		BORP MBOR VAC VAC I VAC II VBOR
	02	C01Z C10Z
	04	E36A E36B
	06	G12A G16A G38A G38B
	10	K09A K09B
15.22.11↔		BORP MBOR VAC VAC I VAC II VBOR
	02	C01Z C10Z
	04	E36A E36B
	06	G12A G16A G38A G38B
	10	K09A K09B
15.22.99↔		BORP MBOR VAC VAC I VAC II VBOR
	02	C01Z C10Z
	04	E36A E36B
	06	G12A G16A G38A G38B
	10	K09A K09B
15.29.00↔		BORP MBOR VAC VBOR
	02	C01Z C10Z
	04	E36A E36B
	06	G12A G16A G38A G38B
	08	I17Z
	21B	X06A X06B X06C
15.29.01↔		BORP MBOR VAC VBOR
	02	C01Z C10Z
	04	E36A E36B
	06	G12A G16A G38A G38B
	08	I17Z
	21B	X06A X06B X06C
15.29.02↔		BORP MBOR VAC VBOR
	02	C01Z C10Z
	04	E36A E36B
	06	G12A G16A G38A G38B
	08	I17Z
	21B	X06A X06B X06C
15.29.09↔		BORP MBOR VAC VBOR
	02	C01Z C10Z
	04	E36A E36B
	06	G12A G16A G38A G38B
	08	I17Z
	21B	X06A X06B X06C
15.29.10↔		BORP MBOR VAC VAC I VAC II VBOR
	02	C01Z C10Z
	04	E36A E36B
	06	G12A G16A G38A G38B
	08	I17Z
	21B	X06A X06B X06C
15.29.11↔		BORP MBOR VAC VAC I VAC II VBOR
	02	C01Z C10Z
	04	E36A E36B
	06	G12A G16A G38A G38B
	08	I17Z
	21B	X06A X06B X06C
15.29.12↔		BORP MBOR VAC VAC I VAC II VBOR
	02	C01Z C10Z
	04	E36A E36B
	06	G12A G16A G38A G38B
	08	I17Z
	21B	X06A X06B X06C
15.29.19↔		BORP MBOR VAC VAC I VAC II VBOR
	02	C01Z C10Z
	04	E36A E36B
	06	G12A G16A G38A G38B
	08	I17Z
	21B	X06A X06B X06C
15.29.30↔		BORP MBOR VAC VAC I VAC II VBOR
	02	C01Z C10Z
	04	E36A E36B
	06	G12A G16A G38A G38B
	08	I17Z
	21B	X06A X06B X06C
15.29.31↔		BORP MBOR VAC VAC I VAC II VBOR
	02	C01Z C10Z
	04	E36A E36B
	06	G12A G16A G38A G38B
	08	I17Z
	21B	X06A X06B X06C
15.29.32↔		BORP MBOR VAC VAC I VAC II VBOR
	02	C01Z C10Z
	04	E36A E36B
	06	G12A G16A G38A G38B
	08	I17Z
	21B	X06A X06B X06C
15.29.39↔		BORP MBOR VAC VAC I VAC II VBOR
	02	C01Z C10Z
	04	E36A E36B
	06	G12A G16A G38A G38B
	08	I17Z
	21B	X06A X06B X06C
15.29.40↔		BORP MBOR VAC VAC I VAC II VBOR
	02	C01Z C10Z
	04	E36A E36B
	06	G12A G16A G38A G38B
	08	I17Z
	21B	X06A X06B X06C
15.29.41↔		BORP MBOR VAC VAC I VAC II VBOR
	02	C01Z C10Z
	04	E36A E36B
	06	G12A G16A G38A G38B
	08	I17Z
	21B	X06A X06B X06C
15.29.42↔		BORP MBOR VAC VAC I VAC II VBOR
	02	C01Z C10Z
	04	E36A E36B
	06	G12A G16A G38A G38B
	08	I17Z
	21B	X06A X06B X06C
15.29.49↔		BORP MBOR VAC VAC I VAC II VBOR
	02	C01Z C10Z
	04	E36A E36B
	06	G12A G16A G38A G38B
	08	I17Z
	21B	X06A X06B X06C
15.3X.00↔		BORP MBOR VAC VAC I VAC II VBOR
	02	C01Z C10Z
	04	E36A E36B
	06	G12A G16A G38A G38B
	10	K09A K09B
15.3X.10↔		BORP MBOR VAC VAC I VAC II VBOR
	02	C01Z C10Z
	04	E36A E36B
	06	G12A G16A G38A G38B
	10	K09A K09B
15.3X.11↔		BORP MBOR VAC VAC I VAC II VBOR
	02	C01Z C10Z
	04	E36A E36B
	06	G12A G16A G38A G38B
	10	K09A K09B
15.3X.12↔		BORP MBOR VAC VAC I VAC II VBOR
	02	C01Z C10Z
	04	E36A E36B
	06	G12A G16A G38A G38B

PROC

CHOP	MDC	DRG
	10	K09A K09B
15.3X.20↔		BORP MBOR VAC
		VAC I VAC II VBOR
	02	C01Z C10Z
	04	E36A E36B
	06	G12A G16A G38A
		G38B
	10	K09A K09B
15.3X.21↔		BORP MBOR VAC
		VAC I VAC II VBOR
	02	C01Z C10Z
	04	E36A E36B
	06	G12A G16A G38A
		G38B
	10	K09A K09B
15.3X.99↔		BORP MBOR VAC
		VAC I VAC II VBOR
	02	C01Z C10Z
	04	E36A E36B
	06	G12A G16A G38A
		G38B
	10	K09A K09B
15.4X.00↔		BORP MBOR VAC
		VAC I VAC II VBOR
	02	C01Z C10Z
	04	E36A E36B
	06	G12A G16A G38A
		G38B
	10	K09A K09B
15.4X.10↔		BORP MBOR VAC
		VAC I VAC II VBOR
	02	C01Z C10Z
	04	E36A E36B
	06	G12A G16A G38A
		G38B
	10	K09A K09B
15.4X.11↔		BORP MBOR VAC
		VAC I VAC II VBOR
	02	C01Z C10Z
	04	E36A E36B
	06	G12A G16A G38A
		G38B
	10	K09A K09B
15.4X.12↔		BORP MBOR VAC
		VAC I VAC II VBOR
	02	C01Z C10Z
	04	E36A E36B
	06	G12A G16A G38A
		G38B
	10	K09A K09B
15.4X.20↔		BORP MBOR VAC
		VAC I VAC II VBOR
	02	C01Z C10Z
	04	E36A E36B
	06	G12A G16A G38A
		G38B
	10	K09A K09B
15.4X.21↔		BORP MBOR VAC
		VAC I VAC II VBOR
	02	C01Z C10Z
	04	E36A E36B
	06	G12A G16A G38A
		G38B
	10	K09A K09B
15.4X.99↔		BORP MBOR VAC
		VAC I VAC II VBOR
	02	C01Z C10Z
	04	E36A E36B
	06	G12A G16A G38A
		G38B

CHOP	MDC	DRG
	10	K09A K09B
15.5X.00↔		BORP MBOR VAC
		VAC I VAC II VBOR
	02	C01Z C10Z
	04	E36A E36B
	06	G12A G16A G38A
		G38B
15.5X.10↔		BORP MBOR VAC
		VAC I VAC II VBOR
	02	C01Z C10Z
	04	E36A E36B
	06	G12A G16A G38A
		G38B
15.5X.11↔		BORP MBOR VAC
		VAC I VAC II VBOR
	02	C01Z C10Z
	04	E36A E36B
	06	G12A G16A G38A
		G38B
15.5X.99↔		BORP MBOR VAC
		VAC I VAC II VBOR
	02	C01Z C10Z
	04	E36A E36B
	06	G12A G16A G38A
		G38B
15.6↔		BORP MBOR VAC
		VBOR
	02	C01Z C10Z
	04	E36A E36B
	06	G12A G16A G38A
		G38B
	08	I17Z
	10	K09A K09B
	21B	X06A X06B X06C
15.7↔		BORP MBOR VAC
		VAC I VAC II VBOR
	01	B09A B09B B09C
		B09D
	02	C01Z C10Z
	04	E36A E36B
	06	G12A G16A G38A
		G38B
15.9↔		BORP MBOR VAC
		VAC I VAC II VBOR
	02	C01Z C10Z
	04	E36A E36B
	06	G12A G16A G38A
		G38B
16.01↔		BORP KORP MBOR
		MKOR VAC VAC I
		VAC II VBOR VKOR
	01	B01A B02A B02B
		B09A B09B B09C
		B09D B20A B20B
		B20C
	02	C01Z C02Z C29Z
	04	E36A E36B
	06	G12A G16A G33Z
		G38A G38B G38C
	07	H33Z
	08	I17Z
	10	K09A K09B
	11	L33Z
	21B	X06A X06B X06C
16.02↔		BORP KORP MBOR
		MKOR VAC VAC I
		VAC II VBOR VKOR
	01	B01A B02A B02B
		B09A B09B B09C
		B09D B20A B20B

CHOP	MDC	DRG
		B20C
	02	C01Z C02Z C29Z
	04	E36A E36B
	06	G12A G16A G33Z
		G38A G38B G38C
	07	H33Z
	08	I17Z
	10	K09A K09B
	11	L33Z
	21B	X06A X06B X06C
16.09↔		BORP MBOR VAC
		VAC I VAC II VBOR
	01	B01A B02A B02B
		B09A B09B B09C
		B09D B20A B20B
		B20C
	02	C01Z C02Z C29Z
	04	E36A E36B
	06	G12A G16A G33Z
		G38A G38B G38C
	07	H33Z
	10	K09A K09B
	11	L33Z
	21B	X06A X06B X06C
16.1↔		BORP MBOR VAC
		VAC I VAC II VBOR
	02	C01Z C02Z C29Z
	04	E36A E36B
	06	G12A G16A G38A
		G38B
	21B	X06A X06B X06C
16.23.11↔	01	B09A B09B B09C
		B09D
	02	C01Z C02Z C29Z
	08	I17Z
	21B	X06A X06B X06C
16.23.12‡↔		AKBB
	01	B60A
	02	C14Z
	16	Q86A
16.23.21‡↔		AKBB
	01	B60A
	02	C14Z
	16	Q86A
16.23.99‡↔		AKBB
	01	B60A
	02	C14Z
	16	Q86A
16.31↔		BORP MBOR VAC
		VAC I VAC II VBOR
	02	C01Z C02Z C29Z
	04	E36A E36B
	06	G12A G16A G38A
		G38B
	21B	X06A X06B X06C
	22	Y02A Y02B Y02C
16.39↔		BORP KORP MBOR
		MKOR VAC VAC I
		VAC II VBOR VKOR
	02	C01Z C02Z C29Z
	04	E36A E36B
	06	G12A G16A G38A
		G38B
	21B	X06A X06B X06C
	22	Y02A Y02B Y02C
16.41↔		BORP KORP MBOR
		MKOR VAC VAC I
		VAC II VBOR VKOR
	02	C01Z C02Z C29Z
	04	E36A E36B

CHOP	MDC	DRG
	06	G12A G16A G38A G38B
	21B	X06A X06B X06C
	22	Y02A Y02B Y02C
16.42↔		BORP KORP MBOR MKOR VAC VAC I VAC II VBOR VKOR
	02	C01Z C02Z C29Z
	04	E36A E36B
	06	G12A G16A G38A G38B
	21B	X06A X06B X06C
	22	Y02A Y02B Y02C
16.49↔		BORP KORP MBOR MKOR VAC VAC I VAC II VBOR VKOR
	02	C01Z C02Z C29Z
	04	E36A E36B
	06	G12A G16A G38A G38B
	21B	X06A X06B X06C
	22	Y02A Y02B Y02C
16.51.00↔		BORP KORP MBOR MKOR VAC VAC I VAC II VBOR VKOR
	01	B01A B02A B02B B09A B09B B09C B09D B20A B20B B20C
	02	C01Z C02Z C29Z
	03	D25A D25B D28Z D29Z
	04	E36A E36B
	06	G12A G16A G33Z G38A G38B G38C
	07	H33Z
	08	I17Z
	09	J02A J02B J08Z
	11	L33Z
	21B	X06A X06B X06C
	22	Y02A Y02B Y02C
16.51.10↔		BORP KORP MBOR MKOR VAC VAC I VAC II VBOR VKOR
	01	B01A B02A B02B B09A B09B B09C B09D B20A B20B B20C
	02	C01Z C02Z C29Z
	03	D25A D25B D28Z D29Z
	04	E36A E36B
	06	G12A G16A G33Z G38A G38B G38C
	07	H33Z
	08	I17Z
	09	J02A J02B J08Z
	11	L33Z
	21B	X06A X06B X06C
	22	Y02A Y02B Y02C
16.51.11↔		BORP KORP MBOR MKOR VAC VAC I VAC II VBOR VKOR
	01	B01A B02A B02B B09A B09B B09C B09D B20A B20B B20C
	02	C01Z C02Z C29Z
	03	D25A D25B D28Z D29Z
	04	E36A E36B
	06	G12A G16A G33Z G38A G38B G38C
	07	H33Z
	08	I17Z
	09	J02A J02B J08Z
	11	L33Z
	21B	X06A X06B X06C
	22	Y02A Y02B Y02C
16.51.99↔		BORP KORP MBOR MKOR VAC VAC I VAC II VBOR VKOR
	01	B01A B02A B02B B09A B09B B09C B09D B20A B20B B20C
	02	C01Z C02Z C29Z
	03	D25A D25B D28Z D29Z
	04	E36A E36B
	06	G12A G16A G33Z G38A G38B G38C
	07	H33Z
	08	I17Z
	09	J02A J02B J08Z
	11	L33Z
	21B	X06A X06B X06C
	22	Y02A Y02B Y02C
16.52.00↔		BORP KORP MBOR MKOR VAC VAC I VAC II VBOR VKOR
	01	B01A B02A B02B B09A B09B B09C B09D B20A B20B B20C
	02	C01Z C02Z C29Z
	03	D25A D25B D28Z D29Z
	04	E36A E36B
	06	G12A G16A G33Z G38A G38B G38C
	07	H33Z
	08	I17Z
	09	J02A J02B J08Z
	11	L33Z
	21B	X06A X06B X06C
	22	Y02A Y02B Y02C
16.52.10↔		BORP KORP MBOR MKOR VAC VAC I VAC II VBOR VKOR
	01	B01A B02A B02B B09A B09B B09C B09D B20A B20B B20C
	02	C01Z C02Z C29Z
	03	D25A D25B D28Z D29Z
	04	E36A E36B
	06	G12A G16A G33Z G38A G38B G38C
	07	H33Z
	08	I17Z
	09	J02A J02B J08Z
	11	L33Z
	21B	X06A X06B X06C
	22	Y02A Y02B Y02C
16.52.11↔		BORP KORP MBOR MKOR VAC VAC I VAC II VBOR VKOR
	01	B01A B02A B02B B09A B09B B09C B09D B20A B20B B20C
	02	C01Z C02Z C29Z
	03	D25A D25B D28Z D29Z
	04	E36A E36B
	06	G12A G16A G33Z G38A G38B G38C
	07	H33Z
	08	I17Z
	09	J02A J02B J08Z
	11	L33Z
	21B	X06A X06B X06C
	22	Y02A Y02B Y02C
16.52.99↔		BORP KORP MBOR MKOR VAC VAC I VAC II VBOR VKOR
	01	B01A B02A B02B B09A B09B B09C B09D B20A B20B B20C
	02	C01Z C02Z C29Z
	03	D25A D25B D28Z D29Z
	04	E36A E36B
	06	G12A G16A G33Z G38A G38B G38C
	07	H33Z
	08	I17Z
	09	J02A J02B J08Z
	11	L33Z
	21B	X06A X06B X06C
	22	Y02A Y02B Y02C
16.59.00↔		BORP KORP MBOR MKOR VAC VAC I VAC II VBOR VKOR
	01	B01A B02A B02B B09A B09B B09C B09D B20A B20B B20C
	02	C01Z C02Z C29Z
	03	D25A D25B D28Z D29Z
	04	E36A E36B
	06	G12A G16A G33Z G38A G38B G38C
	07	H33Z
	08	I17Z
	09	J02A J02B J08Z
	11	L33Z
	21B	X06A X06B X06C
	22	Y02A Y02B Y02C
16.59.10↔		BORP KORP MBOR MKOR VAC VAC I VAC II VBOR VKOR
	01	B01A B02A B02B B09A B09B B09C B09D B20A B20B B20C
	02	C01Z C02Z C29Z
	03	D25A D25B D28Z D29Z
	04	E36A E36B
	06	G12A G16A G33Z G38A G38B G38C
	07	H33Z
	08	I17Z
	09	J02A J02B J08Z
	11	L33Z

PROC

PROC

CHOP	MDC	DRG
	21B	X06A X06B X06C
	22	Y02A Y02B Y02C
16.59.11↔		BORP KORP MBOR MKOR VAC VAC I VAC II VBOR VKOR
	01	B01A B02A B02B B09A B09B B09C B09D B20A B20B B20C
	02	C01Z C02Z C29Z
	03	D25A D25B D28Z D29Z
	04	E36A E36B
	06	G12A G16A G33Z G38A G38B G38C
	07	H33Z
	08	I17Z
	09	J02A J02B J08Z
	11	L33Z
	21B	X06A X06B X06C
	22	Y02A Y02B Y02C
16.59.99↔		BORP KORP MBOR MKOR VAC VAC I VAC II VBOR VKOR
	01	B01A B02A B02B B09A B09B B09C B09D B20A B20B B20C
	02	C01Z C02Z C29Z
	03	D25A D25B D28Z D29Z
	04	E36A E36B
	06	G12A G16A G33Z G38A G38B G38C
	07	H33Z
	08	I17Z
	09	J02A J02B J08Z
	11	L33Z
	21B	X06A X06B X06C
	22	Y02A Y02B Y02C
16.61.00↔		BORP MBOR VAC VAC I VAC II VBOR
	02	C01Z C02Z C29Z
	03	D12A D12B
	04	E36A E36B
	06	G12A G16A G38A G38B
	08	I17Z
	21B	X06A X06B X06C
	22	Y02A Y02B Y02C
16.61.10↔		BORP MBOR VAC VAC I VAC II VBOR
	02	C01Z C02Z C29Z
	03	D12A D12B
	04	E36A E36B
	06	G12A G16A G38A G38B
	08	I17Z
	21B	X06A X06B X06C
	22	Y02A Y02B Y02C
16.61.99↔		BORP MBOR VAC VAC I VAC II VBOR
	02	C01Z C02Z C29Z
	03	D12A D12B
	04	E36A E36B
	06	G12A G16A G38A G38B
	08	I17Z
	21B	X06A X06B X06C
	22	Y02A Y02B Y02C
16.62.00↔		BORP MBOR VAC VAC I VAC II VBOR
	02	C01Z C02Z C29Z
	03	D12A D12B
	04	E36A E36B
	06	G12A G16A G38A G38B
	08	I17Z
	21B	X06A X06B X06C
	22	Y02A Y02B Y02C
16.62.10↔		BORP MBOR VAC VAC I VAC II VBOR
	02	C01Z C02Z C29Z
	03	D12A D12B
	04	E36A E36B
	06	G12A G16A G38A G38B
	08	I17Z
	21B	X06A X06B X06C
	22	Y02A Y02B Y02C
16.62.20↔		BORP MBOR VAC VAC I VAC II VBOR
	02	C01Z C02Z C29Z
	03	D12A D12B
	04	E36A E36B
	06	G12A G16A G38A G38B
	08	I17Z
	21B	X06A X06B X06C
	22	Y02A Y02B Y02C
16.62.29↔		BORP MBOR VAC VAC I VAC II VBOR
	02	C01Z C02Z C29Z
	03	D12A D12B
	04	E36A E36B
	06	G12A G16A G38A G38B
	08	I17Z
	21B	X06A X06B X06C
	22	Y02A Y02B Y02C
16.62.99↔		BORP MBOR VAC VAC I VAC II VBOR
	02	C01Z C02Z C29Z
	03	D12A D12B
	04	E36A E36B
	06	G12A G16A G38A G38B
	08	I17Z
	21B	X06A X06B X06C
	22	Y02A Y02B Y02C
16.63↔		BORP MBOR VAC VAC I VAC II VBOR
	01	B01A B02A B02B B09A B09B B09C B09D B20A B20B B20C
	02	C01Z C02Z C29Z
	03	D12A D12B
	04	E36A E36B
	06	G12A G16A G33Z G38A G38B G38C
	07	H33Z
	08	I17Z
	10	K09A K09B
	11	L33Z
	21B	X06A X06B X06C
	22	Y02A Y02B Y02C
16.64↔		BORP MBOR VAC VAC I VAC II VBOR
	01	B01A B02A B02B B09A B09B B09C B09D B20A B20B B20C
	02	C01Z C02Z C29Z
	03	D12A D12B
	04	E36A E36B
	06	G12A G16A G33Z G38A G38B G38C
	07	H33Z
	08	I17Z
	10	K09A K09B
	11	L33Z
	21B	X06A X06B X06C
	22	Y02A Y02B Y02C
16.65.00↔		BORP MBOR VAC VAC I VAC II VBOR
	02	C01Z C02Z C29Z
	04	E36A E36B
	06	G12A G16A G38A G38B
	08	I17Z
	21B	X06A X06B X06C
	22	Y02A Y02B Y02C
16.65.10↔		BORP MBOR VAC VAC I VAC II VBOR
	02	C01Z C02Z C29Z
	04	E36A E36B
	06	G12A G16A G38A G38B
	08	I17Z
	21B	X06A X06B X06C
	22	Y02A Y02B Y02C
16.65.99↔		BORP MBOR VAC VAC I VAC II VBOR
	02	C01Z C02Z C29Z
	04	E36A E36B
	06	G12A G16A G38A G38B
	08	I17Z
	21B	X06A X06B X06C
	22	Y02A Y02B Y02C
16.66↔		BORP MBOR VAC VAC I VAC II VBOR
	01	B01A B02A B02B B09A B09B B09C B09D B20A B20B B20C
	02	C01Z C02Z C29Z
	03	D12A D12B
	04	E36A E36B
	06	G12A G16A G33Z G38A G38B G38C
	07	H33Z
	08	I17Z
	10	K09A K09B
	11	L33Z
	21B	X06A X06B X06C
	22	Y02A Y02B Y02C
16.71↔		BORP MBOR VAC VAC I VAC II VBOR
	02	C01Z C02Z C29Z
	04	E36A E36B
	06	G12A G16A G38A G38B
	21B	X06A X06B X06C
16.72↔		BORP MBOR VAC VAC I VAC II VBOR
	02	C01Z C02Z C29Z
	04	E36A E36B
	06	G12A G16A G38A

CHOP	MDC	DRG
		G38B
	21B	X06A X06B X06C
16.81↔		BORP MBOR VAC VBOR
	02	C01Z C02Z C29Z
	03	D12A D12B
	04	E36A E36B
	06	G12A G16A G38A G38B
	08	I17Z
	21B	X06A X06B X06C
16.82↔		BORP MBOR VAC VAC I VAC II VBOR
	02	C01Z C02Z C29Z
	04	E36A E36B
	06	G12A G16A G38A G38B
	08	I17Z
	21B	X06A X06B X06C
	22	Y02A Y02B Y02C
16.89↔		BORP MBOR VAC VAC I VAC II VBOR
	01	B09A B09B B09C B09D
	02	C01Z C02Z C29Z
	04	E36A E36B
	06	G12A G16A G38A G38B
	08	I17Z
	10	K09A K09B
	21B	X06A X06B X06C
	22	Y02A Y02B Y02C
16.92↔		BORP MBOR VAC VAC I VAC II VBOR
	01	B09A B09B B09C B09D
	02	C01Z C02Z C29Z
	04	E36A E36B
	06	G12A G16A G38A G38B
	10	K09A K09B
	21B	X06A X06B X06C
	22	Y02A Y02B Y02C
16.98.10↔		BORP MBOR VAC VBOR
	01	B09A B09B B09C B09D
	02	C01Z C02Z C29Z
	03	D12A D12B
	04	E36A E36B
	06	G12A G16A G38A G38B
	08	I17Z
	21B	X06A X06B X06C
	22	Y02A Y02B Y02C
16.98.11↔		BORP KORP MBOR MKOR VAC VAC I VAC II VB VBOR VKOR
	01	B09A B09B B09C B09D
	02	C01Z C02Z C29Z
	03	D02A D02B D12A D12B D24A D24B
	04	E36A E36B
	05	F04Z
	06	G12A G16A G38A G38B
	08	I02A I02B I02C
	09	J01A J01B J02A

CHOP	MDC	DRG
		J02B
	12	M37Z
	21A	W01A W01B
	21B	X01A X06A X06B X06C X07A X07B
	22	Y02A Y02B
16.98.19↔		BORP MBOR VAC VAC I VAC II VBOR
	01	B09A B09B B09C B09D
	02	C01Z C02Z C29Z
	03	D12A D12B
	04	E36A E36B
	06	G12A G16A G38A G38B
	08	I17Z
	21B	X06A X06B X06C
	22	Y02A Y02B Y02C
16.98.20↔		BORP MBOR VAC VAC I VAC II VBOR
	01	B09A B09B B09C B09D
	02	C01Z C02Z C29Z
	03	D12A D12B
	04	E36A E36B
	06	G12A G16A G38A G38B
	08	I17Z
	10	K09A K09B
	21B	X06A X06B X06C
	22	Y02A Y02B Y02C
16.98.21↔		BORP MBOR VAC VAC I VAC II VBOR
	02	C01Z C02Z C29Z
	03	D12A D12B
	04	E36A E36B
	06	G12A G16A G38A G38B
	08	I17Z
	21B	X06A X06B X06C
	22	Y02A Y02B Y02C
18.01↔	03	D09A D09B D30A D30B D30C
	09	J02A J02B J03A J03B J04Z J11A J11B
	21B	X06A X06B X06C
18.09↔	03	D09A D09B D30A D30B D30C
	09	J02A J02B J03A J03B J04Z J11A J11B
	21B	X06A X06B X06C
18.21↔	01	B17A B17B
	03	D09A D09B D12A D12B D30A D30B
	05	F21A F21B F21C
	08	I27A I27B I27C I27D
	09	J02A J02B J03A J03B J04Z J08Z J11A J11B J21Z J22Z
	10	K09A K09B
	21B	X06A X06B X06C
18.29.12↔	01	B17A B17B
	03	D09A D09B D12A D12B D30A D30B D30C
	05	F21A F21B F21C

CHOP	MDC	DRG
	08	I27A I27B I27C I27D
	09	J02A J02B J03A J03B J04Z J08Z J11A J11B J21Z J22Z
	10	K09A K09B
	21B	X06A X06B X06C
18.31↔	01	B17A B17B
	03	D09A D09B D12A D12B D30A D30B
	05	F21A F21B F21C
	08	I27A I27B I27C I27D
	09	J02A J02B J03A J03B J04Z J08Z J10A J10B J21Z
	10	K09A K09B
	21B	X06A X06B X06C
18.32↔		BORP MBOR VAC VAC I VAC II VBOR
	01	B17A B17B
	03	D09A D09B D12A D12B D30A D30B D30C
	04	E36A E36B
	05	F21A F21B F21C
	06	G12A G16A G38A G38B
	08	I27A I27B I27C I27D
	09	J02A J02B J03A J03B J04Z J08Z J10A J10B J21Z
	10	K09A K09B
	21B	X06A X06B X06C
	22	Y02A Y02B Y02C
18.33↔		BORP MBOR VAC VBOR
	03	D09A D09B D30A D30B
	04	E36A E36B
	06	G12A G16A G38A G38B
	09	J02A J02B J03A J03B J04Z J10A J10B
	21B	X06A X06B X06C
	22	Y02A Y02B Y02C
18.5↔		BORP MBOR VAC VAC I VAC II VBOR
	03	D09A D09B D30A D30B D30C
	04	E36A E36B
	06	G12A G16A G38A G38B
	09	J02A J02B J03A J03B J04Z J10A J10B
18.6X.00↔		BORP MBOR VAC VBOR
	03	D09A D09B D30A D30B
	04	E36A E36B
	06	G12A G16A G38A G38B
	09	J02A J02B J03A J03B J04Z J10A J10B
	21B	X06A X06B X06C

PROC

PROC

CHOP	MDC	DRG
	22	Y02A Y02B Y02C
18.6X.10↔		BORP MBOR VAC
		VBOR
	03	D09A D09B D30A
		D30B
	04	E36A E36B
	06	G12A G16A G38A
		G38B
	09	J02A J02B J03A
		J03B J04Z J10A
		J10B
	21B	X06A X06B X06C
18.6X.20↔		BORP MBOR VAC
		VAC I VAC II VBOR
	03	D09A D09B D30A
		D30B
	04	E36A E36B
	06	G12A G16A G38A
		G38B
	09	J02A J02B J03A
		J03B J04Z J10A
		J10B
	21B	X06A X06B X06C
	22	Y02A Y02B Y02C
18.6X.30↔		BORP MBOR VAC
		VAC I VAC II VBOR
	03	D09A D09B D30A
		D30B
	04	E36A E36B
	06	G12A G16A G38A
		G38B
	09	J02A J02B J03A
		J03B J04Z J10A
		J10B
	21B	X06A X06B X06C
	22	Y02A Y02B Y02C
18.6X.99↔		BORP MBOR VAC
		VBOR
	03	D09A D09B D30A
		D30B
	04	E36A E36B
	06	G12A G16A G38A
		G38B
	09	J02A J02B J03A
		J03B J04Z J10A
		J10B
	21B	X06A X06B X06C
	22	Y02A Y02B Y02C
18.71.00↔		BORP MBOR VAC
		VAC I VAC II VBOR
	01	B01A B02A B02B
		B09A B09B B09C
		B09D B20A B20B
		B20C
	03	D09A D09B D17Z
		D30A D30B
	04	E36A E36B
	06	G12A G16A G33Z
		G38A G38B G38C
	07	H33Z
	08	I15A I15B
	09	J02A J02B J03A
		J03B J04Z J10A
		J10B
	11	L33Z
	21B	X06A X06B X06C
	22	Y02A Y02B Y02C
18.71.10↔		BORP MBOR VAC
		VAC I VAC II VBOR
	01	B01A B02A B02B
		B09A B09B B09C
		B09D B20A B20B
		B20C
	03	D09A D09B D17Z
		D30A D30B
	04	E36A E36B
	06	G12A G16A G33Z
		G38A G38B G38C
	07	H33Z
	08	I15A I15B
	09	J02A J02B J03A
		J03B J04Z J10A
		J10B
	11	L33Z
	21B	X06A X06B X06C
	22	Y02A Y02B Y02C
18.71.11↔		BORP KORP MBOR
		MKOR VAC VAC I
		VAC II VBOR VKOR
	01	B01A B02A B02B
		B09A B09B B09C
		B09D B20A B20B
		B20C
	03	D09A D09B D17Z
		D30A D30B
	04	E36A E36B
	06	G12A G16A G33Z
		G38A G38B G38C
	07	H33Z
	08	I15A I15B
	09	J02A J02B J03A
		J03B J04Z J10A
		J10B
	11	L33Z
	21B	X06A X06B X06C
	22	Y02A Y02B Y02C
18.71.12↔		BORP KORP MBOR
		MKOR VAC VAC I
		VAC II VBOR VKOR
	01	B01A B02A B02B
		B09A B09B B09C
		B09D B20A B20B
		B20C
	03	D09A D09B D17Z
		D30A D30B
	04	E36A E36B
	06	G12A G16A G33Z
		G38A G38B G38C
	07	H33Z
	08	I15A I15B
	09	J02A J02B J03A
		J03B J04Z J10A
		J10B
	11	L33Z
	21B	X06A X06B X06C
	22	Y02A Y02B Y02C
18.71.13↔		BORP KORP MBOR
		MKOR VAC VAC I
		VAC II VBOR VKOR
	01	B01A B02A B02B
		B09A B09B B09C
		B09D B20A B20B
		B20C
	03	D09A D09B D17Z
		D30A D30B
	04	E36A E36B
	06	G12A G16A G33Z
		G38A G38B G38C
	07	H33Z
	08	I15A I15B
	09	J02A J02B J03A
		J03B J04Z J10A
		J10B
	11	L33Z
	21B	X06A X06B X06C
	22	Y02A Y02B Y02C
18.71.14↔		BORP KORP MBOR
		MKOR VAC VAC I
		VAC II VB VBOR
		VKOR
	01	B01A B02A B02B
		B09A B09B B09C
		B09D B20A B20B
		B20C
	03	D02A D02B D09A
		D09B D17Z D24A
		D24B D30A D30B
	04	E36A E36B
	05	F04Z
	06	G12A G16A G33Z
		G38A G38B G38C
	07	H33Z
	08	I02A I02B I02C
	09	J01A J01B J02A
		J02B J03A J03B
		J04Z J10A J10B
	11	L33Z
	12	M37Z
	21A	W01A W01B
	21B	X01A X06A X06B
		X06C X07A X07B
	22	Y02A Y02B
18.71.19↔		BORP MBOR VAC
		VAC I VAC II VBOR
	01	B01A B02A B02B
		B09A B09B B09C
		B09D B20A B20B
		B20C
	03	D09A D09B D17Z
		D30A D30B
	04	E36A E36B
	06	G12A G16A G33Z
		G38A G38B G38C
	07	H33Z
	08	I15A I15B
	09	J02A J02B J03A
		J03B J04Z J10A
		J10B
	11	L33Z
	21B	X06A X06B X06C
	22	Y02A Y02B Y02C
18.71.20↔		BORP KORP MBOR
		MKOR VAC VAC I
		VAC II VBOR VKOR
	01	B01A B02A B02B
		B09A B09B B09C
		B09D B20A B20B
		B20C
	03	D09A D09B D17Z
		D30A D30B
	04	E36A E36B
	06	G12A G16A G33Z
		G38A G38B G38C
	07	H33Z
	08	I15A I15B
	09	J02A J02B J03A
		J03B J04Z J10A
		J10B
	11	L33Z
	21B	X06A X06B X06C

CHOP	MDC	DRG
	22	Y02A Y02B Y02C
18.71.21↔		BORP KORP MBOR MKOR VAC VAC I VAC II VBOR VKOR
	01	B01A B02A B02B B09A B09B B09C B09D B20A B20B B20C
	03	D09A D09B D17Z D30A D30B
	04	E36A E36B
	06	G12A G16A G33Z G38A G38B G38C
	07	H33Z
	08	I15A I15B
	09	J02A J02B J03A J03B J04Z J10A J10B
	11	L33Z
	21B	X06A X06B X06C
	22	Y02A Y02B Y02C
18.71.22↔		BORP KORP MBOR MKOR VAC VAC I VAC II VBOR VKOR
	01	B01A B02A B02B B09A B09B B09C B09D B20A B20B B20C
	03	D09A D09B D17Z D30A D30B
	04	E36A E36B
	06	G12A G16A G33Z G38A G38B G38C
	07	H33Z
	08	I15A I15B
	09	J02A J02B J03A J03B J04Z J10A J10B
	11	L33Z
	21B	X06A X06B X06C
	22	Y02A Y02B Y02C
18.71.23↔		BORP KORP MBOR MKOR VAC VAC I VAC II VBOR VKOR
	01	B01A B02A B02B B09A B09B B09C B09D B20A B20B B20C
	03	D09A D09B D17Z D30A D30B
	04	E36A E36B
	06	G12A G16A G33Z G38A G38B G38C
	07	H33Z
	08	I15A I15B
	09	J02A J02B J03A J03B J04Z J10A J10B
	11	L33Z
	21B	X06A X06B X06C
	22	Y02A Y02B Y02C
18.71.24↔		BORP KORP MBOR MKOR VAC VAC I VAC II VB VBOR VKOR
	01	B01A B02A B02B B09A B09B B09C B09D B20A B20B B20C
	03	D02A D02B D09A D09B D17Z D24A D24B D30A D30B
	04	E36A E36B
	05	F04Z
	06	G12A G16A G33Z G38A G38B G38C
	07	H33Z
	08	I02A I02B I02C
	09	J01A J01B J02A J02B J03A J03B J04Z J10A J10B
	11	L33Z
	12	M37Z
	21A	W01A W01B
	21B	X01A X06A X06B X06C X07A X07B
	22	Y02A Y02B
18.71.29↔		BORP KORP MBOR MKOR VAC VAC I VAC II VBOR VKOR
	01	B01A B02A B02B B09A B09B B09C B09D B20A B20B B20C
	03	D09A D09B D17Z D30A D30B
	04	E36A E36B
	06	G12A G16A G33Z G38A G38B G38C
	07	H33Z
	08	I15A I15B
	09	J02A J02B J03A J03B J04Z J10A J10B
	11	L33Z
	21B	X06A X06B X06C
	22	Y02A Y02B Y02C
18.71.30↔		BORP KORP MBOR MKOR VAC VAC I VAC II VBOR VKOR
	01	B01A B02A B02B B09A B09B B09C B09D B20A B20B B20C
	03	D09A D09B D17Z D30A D30B
	04	E36A E36B
	06	G12A G16A G33Z G38A G38B G38C
	07	H33Z
	08	I15A I15B
	09	J02A J02B J03A J03B J04Z J10A J10B
	11	L33Z
	21B	X06A X06B X06C
	22	Y02A Y02B Y02C
18.71.99↔		BORP MBOR VAC VAC I VAC II VBOR
	01	B01A B02A B02B B09A B09B B09C B09D B20A B20B B20C
	03	D09A D09B D17Z D30A D30B
	04	E36A E36B
	06	G12A G16A G33Z G38A G38B G38C
	07	H33Z
	08	I15A I15B
	09	J02A J02B J03A J03B J04Z J10A J10B
	11	L33Z
	21B	X06A X06B X06C
	22	Y02A Y02B Y02C
18.72↔		BORP KORP MBOR MKOR VAC VAC I VAC II VBOR VKOR
	03	D09A D09B D17Z D30A D30B
	04	E36A E36B
	06	G12A G16A G38A G38B
	09	J02A J02B J03A J03B J04Z J10A J10B
	21B	X06A X06B X06C
	22	Y02A Y02B Y02C
18.79↔	03	D09A D09B D17Z D30A D30B D30C
	09	J02A J02B J03A J03B J04Z J10A J10B
	21B	X06A X06B X06C
19.0↔		BORP MBOR VAC VAC I VAC II VBOR
	03	D09A D09B D30A D30B
	04	E36A E36B
	06	G12A G16A G38A G38B
19.11↔		BORP KORP MBOR MKOR VAC VAC I VAC II VBOR VKOR
	01	B01A B02A B02B B09A B09B B09C B09D B20A B20B B20C
	03	D09A D09B D30A D30B
	04	E36A E36B
	06	G12A G16A G38A G38B
	21B	X06A X06B X06C
19.19.00↔		BORP KORP MBOR MKOR VAC VAC I VAC II VBOR VKOR
	01	B01A B02A B02B B09A B09B B09C B09D B20A B20B B20C
	03	D09A D09B D30A D30B D30C
	04	E36A E36B
	06	G12A G16A G38A G38B
	21B	X06A X06B X06C
19.19.10↔		BORP KORP MBOR MKOR VAC VAC I VAC II VBOR VKOR
	01	B01A B02A B02B B09A B09B B09C B09D B20A B20B B20C
	03	D09A D09B D30A D30B
	04	E36A E36B
	06	G12A G16A G38A G38B

PROC

PROC

CHOP	MDC	DRG
	21B	X06A X06B X06C
19.19.11↔		BORP KORP MBOR
		MKOR VAC VAC I
		VAC II VBOR VKOR
	01	B01A B02A B02B
		B09A B09B B09C
		B09D B20A B20B
		B20C
	03	D09A D09B D30A
		D30B
	04	E36A E36B
	06	G12A G16A G38A
		G38B
	21B	X06A X06B X06C
19.19.12↔		BORP KORP MBOR
		MKOR VAC VAC I
		VAC II VBOR VKOR
	01	B01A B02A B02B
		B09A B09B B09C
		B09D B20A B20B
		B20C
	03	D09A D09B D30A
		D30B
	04	E36A E36B
	06	G12A G16A G38A
		G38B
	21B	X06A X06B X06C
19.19.99↔		BORP KORP MBOR
		MKOR VAC VAC I
		VAC II VBOR VKOR
	01	B01A B02A B02B
		B09A B09B B09C
		B09D B20A B20B
		B20C
	03	D09A D09B D30A
		D30B
	04	E36A E36B
	06	G12A G16A G38A
		G38B
	21B	X06A X06B X06C
19.21↔		BORP KORP MBOR
		MKOR VAC VAC I
		VAC II VBOR VKOR
	01	B01A B02A B02B
		B09A B09B B09C
		B09D B20A B20B
		B20C
	03	D09A D09B D30A
		D30B
	04	E36A E36B
	06	G12A G16A G38A
		G38B
	21B	X06A X06B X06C
19.29.00↔		BORP MBOR VAC
		VAC I VAC II VBOR
	01	B01A B02A B02B
		B09A B09B B09C
		B09D B20A B20B
		B20C
	03	D09A D09B D30A
		D30B D30C
	04	E36A E36B
	06	G12A G16A G38A
		G38B
	21B	X06A X06B X06C
19.29.10↔		BORP KORP MBOR
		MKOR VAC VAC I
		VAC II VBOR VKOR
	01	B01A B02A B02B
		B09A B09B B09C
		B09D B20A B20B
		B20C
	03	D09A D09B D30A
		D30B D30C
	04	E36A E36B
	06	G12A G16A G38A
		G38B
	21B	X06A X06B X06C
19.29.11↔		BORP KORP MBOR
		MKOR VAC VAC I
		VAC II VBOR VKOR
	01	B01A B02A B02B
		B09A B09B B09C
		B09D B20A B20B
		B20C
	03	D09A D09B D30A
		D30B D30C
	04	E36A E36B
	06	G12A G16A G38A
		G38B
	21B	X06A X06B X06C
19.29.12↔		BORP KORP MBOR
		MKOR VAC VAC I
		VAC II VBOR VKOR
	01	B01A B02A B02B
		B09A B09B B09C
		B09D B20A B20B
		B20C
	03	D09A D09B D30A
		D30B D30C
	04	E36A E36B
	06	G12A G16A G38A
		G38B
	21B	X06A X06B X06C
19.29.13↔		BORP KORP MBOR
		MKOR VAC VAC I
		VAC II VBOR VKOR
	01	B01A B02A B02B
		B09A B09B B09C
		B09D B20A B20B
		B20C
	03	D09A D09B D30A
		D30B D30C
	04	E36A E36B
	06	G12A G16A G38A
		G38B
	21B	X06A X06B X06C
19.29.99↔		BORP KORP MBOR
		MKOR VAC VAC I
		VAC II VBOR VKOR
	01	B01A B02A B02B
		B09A B09B B09C
		B09D B20A B20B
		B20C
	03	D09A D09B D30A
		D30B D30C
	04	E36A E36B
	06	G12A G16A G38A
		G38B
	21B	X06A X06B X06C
19.3↔		BORP MBOR VAC
		VAC I VAC II VBOR
	03	D09A D09B D30A
		D30B D30C
	04	E36A E36B
	06	G12A G16A G38A
		G38B
	21B	X06A X06B X06C
19.4↔		BORP MBOR VAC
		VBOR
	03	D09A D09B D30A
		B09D B20A B20B
		B20C
	03	D09A D09B D30A
		D30B D30C
	04	E36A E36B
	06	G12A G16A G38A
		G38B
	21B	X06A X06B X06C
19.52↔		BORP MBOR VAC
		VAC I VAC II VBOR
	01	B01A B02A B02B
		B09A B09B B09C
		B09D B20A B20B
		B20C
	03	D06A D06B D09A
		D09B
	04	E36A E36B
	06	G12A G16A G38A
		G38B
	21B	X06A X06B X06C
19.53↔		BORP MBOR VAC
		VAC I VAC II VBOR
	01	B01A B02A B02B
		B09A B09B B09C
		B09D B20A B20B
		B20C
	03	D06A D06B D09A
		D09B
	04	E36A E36B
	06	G12A G16A G38A
		G38B
	21B	X06A X06B X06C
19.54↔		BORP MBOR VAC
		VAC I VAC II VBOR
	01	B01A B02A B02B
		B09A B09B B09C
		B09D B20A B20B
		B20C
	03	D06A D06B D09A
		D09B
	04	E36A E36B
	06	G12A G16A G38A
		G38B
	21B	X06A X06B X06C
19.55↔		BORP MBOR VAC
		VAC I VAC II VBOR
	01	B01A B02A B02B
		B09A B09B B09C
		B09D B20A B20B
		B20C
	03	D06A D06B D09A
		D09B
	04	E36A E36B
	06	G12A G16A G38A
		G38B
	21B	X06A X06B X06C
19.56.00↔		BORP MBOR VAC
		VAC I VAC II VBOR
	01	B01A B02A B02B
		B09A B09B B09C
		B09D B20A B20B
		B20C
	03	D06A D06B D09A
		D09B
	04	E36A E36B
	06	G12A G16A G38A
		G38B
	21B	X06A X06B X06C
19.56.10↔		BORP MBOR VAC
		VAC I VAC II VBOR
	01	B01A B02A B02B
		B09A B09B B09C
		B09D B20A B20B

CHOP	MDC	DRG
		B20C
	03	D06A D06B D09A D09B
	04	E36A E36B
	06	G12A G16A G38A G38B
	21B	X06A X06B X06C
19.56.11↔		BORP MBOR VAC VAC I VAC II VBOR
	01	B01A B02A B02B B09A B09B B09C B09D B20A B20B B20C
	03	D06A D06B D09A D09B
	04	E36A E36B
	06	G12A G16A G38A G38B
	21B	X06A X06B X06C
19.56.20↔		BORP MBOR VAC VAC I VAC II VBOR
	01	B01A B02A B02B B09A B09B B09C B09D B20A B20B B20C
	03	D06A D06B D09A D09B
	04	E36A E36B
	06	G12A G16A G38A G38B
	21B	X06A X06B X06C
19.56.21↔		BORP MBOR VAC VAC I VAC II VBOR
	01	B01A B02A B02B B09A B09B B09C B09D B20A B20B B20C
	03	D06A D06B D09A D09B
	04	E36A E36B
	06	G12A G16A G38A G38B
	21B	X06A X06B X06C
19.56.99↔		BORP MBOR VAC VAC I VAC II VBOR
	01	B01A B02A B02B B09A B09B B09C B09D B20A B20B B20C
	03	D06A D06B D09A D09B
	04	E36A E36B
	06	G12A G16A G38A G38B
	21B	X06A X06B X06C
19.6↔		BORP MBOR VAC VAC I VAC II VBOR
	01	B01A B02A B02B B09A B09B B09C B09D B20A B20B B20C
	03	D06A D06B D06C D09A D09B D30A D30B
	04	E36A E36B
	06	G12A G16A G38A G38B
	21B	X06A X06B X06C
19.9X.11↔		BORP MBOR VAC VAC I VAC II VBOR
	03	D06A D06B D06C D09A D09B D30A D30B
	04	E36A E36B
	06	G12A G16A G38A G38B
	09	J02A J02B J03A J03B J04Z J10A J10B
	21B	X06A X06B X06C
19.9X.12↔		BORP KORP MBOR MKOR VAC VAC I VAC II VBOR VKOR
	03	D06A D06B D06C D09A D09B D30A D30B
	04	E36A E36B
	06	G12A G16A G38A G38B
	09	J02A J02B J03A J03B J04Z J10A J10B
	21B	X06A X06B X06C
	22	Y02A Y02B Y02C
19.9X.13↔		BORP KORP MBOR MKOR VAC VAC I VAC II VBOR VKOR
	03	D06A D06B D06C D09A D09B D30A D30B
	04	E36A E36B
	06	G12A G16A G38A G38B
	09	J02A J02B J03A J03B J04Z J10A J10B
	21B	X06A X06B X06C
	22	Y02A Y02B Y02C
19.9X.14↔		BORP MBOR VAC VAC I VAC II VBOR
	03	D06A D06B D06C D09A D09B D30A D30B
	04	E36A E36B
	06	G12A G16A G38A G38B
	09	J02A J02B J03A J03B J04Z J10A J10B
	21B	X06A X06B X06C
19.9X.19↔		BORP MBOR VAC VBOR
	03	D06A D06B D06C D09A D09B D30A D30B
	04	E36A E36B
	06	G12A G16A G38A G38B
	09	J02A J02B J03A J03B J04Z J10A J10B
	21B	X06A X06B X06C
19.9X.99↔		BORP MBOR VAC VBOR
	03	D06A D06B D06C D09A D09B D30A D30B
	04	E36A E36B
	06	G12A G16A G38A G38B
	09	J02A J02B J03A J03B J04Z J10A J10B
	21B	X06A X06B X06C
20.01↔	01	B09A B09B B09C B09D
	03	D09A D09B D30A D30B D30C
	21B	X06A X06B X06C
20.21↔		BORP MBOR VAC VBOR
	03	D09A D09B D30A D30B D30C
	04	E36A E36B
	06	G12A G16A G38A G38B
20.22↔		BORP MBOR VAC VAC I VAC II VBOR
	03	D09A D09B D30A D30B D30C
	04	E36A E36B
	06	G12A G16A G38A G38B
20.23.00↔	01	B01A B02A B02B B09A B09B B09C B09D B20A B20B B20C
	03	D06A D06B D06C D09A D09B D30A D30B D30C
	21B	X06A X06B X06C
20.23.10↔	01	B01A B02A B02B B09A B09B B09C B09D B20A B20B B20C
	03	D06A D06B D06C D09A D09B D30A D30B D30C
	21B	X06A X06B X06C
20.23.11↔	01	B01A B02A B02B B09A B09B B09C B09D B20A B20B B20C
	03	D06A D06B D06C D09A D09B D30A D30B D30C
	21B	X06A X06B X06C
20.23.12↔	01	B01A B02A B02B B09A B09B B09C B09D B20A B20B B20C
	03	D06A D06B D06C D09A D09B D30A D30B D30C
	21B	X06A X06B X06C
20.23.13↔	01	B01A B02A B02B B09A B09B B09C B09D B20A B20B B20C
	03	D06A D06B D06C D09A D09B D30A D30B D30C
	21B	X06A X06B X06C
20.23.99↔	01	B01A B02A B02B B09A B09B B09C B09D B20A B20B B20C
	03	D06A D06B D06C D09A D09B D30A D30B D30C

PROC

PROC

CHOP	MDC	DRG
	21B	X06A X06B X06C
20.32.01↔	03	D09A D09B D30A D30B D30C
20.32.02↔	03	D09A D09B D30A D30B D30C
20.32.99↔	03	D09A D09B D30A D30B D30C
20.40↔		BORP MBOR VAC VAC I VAC II VBOR
	03	D06A D06B
	04	E36A E36B
	06	G12A G16A G38A G38B
20.41↔		BORP MBOR VAC VBOR
	01	B01A B02A B02B B09A B09B B09C B09D B20A B20B B20C
	03	D06A D06B
	04	E36A E36B
	06	G12A G16A G38A G38B
20.42↔		BORP KORP MBOR MKOR VAC VAC I VAC II VBOR VKOR
	01	B01A B02A B02B B09A B09B B09C B09D B20A B20B B20C
	03	D06A D06B
	04	E36A E36B
	06	G12A G16A G38A G38B
20.43.00↔		BORP MBOR VAC VBOR
	01	B01A B02A B02B B09A B09B B09C B09D B20A B20B B20C
	03	D06A D06B
	04	E36A E36B
	06	G12A G16A G38A G38B
20.43.11↔		BORP KORP MBOR MKOR VAC VAC I VAC II VBOR VKOR
	01	B01A B02A B02B B09A B09B B09C B09D B20A B20B B20C
	03	D06A D06B
	04	E36A E36B
	06	G12A G16A G38A G38B
20.43.12↔		BORP KORP MBOR MKOR VAC VAC I VAC II VBOR VKOR
	01	B01A B02A B02B B09A B09B B09C B09D B20A B20B B20C
	03	D06A D06B
	04	E36A E36B
	06	G12A G16A G38A G38B
20.43.99↔		BORP MBOR VAC VAC I VAC II VBOR
	03	D06A D06B
	04	E36A E36B
	06	G12A G16A G38A G38B
20.44.00↔		BORP MBOR VAC VAC I VAC II VBOR
	03	D06A D06B
	04	E36A E36B
	06	G12A G16A G38A G38B
20.44.11↔		BORP KORP MBOR MKOR VAC VAC I VAC II VBOR VKOR
	01	B01A B02A B02B B09A B09B B09C B09D B20A B20B B20C
	03	D06A D06B
	04	E36A E36B
	06	G12A G16A G38A G38B
20.44.12↔		BORP KORP MBOR MKOR VAC VAC I VAC II VBOR VKOR
	01	B01A B02A B02B B09A B09B B09C B09D B20A B20B B20C
	03	D06A D06B
	04	E36A E36B
	06	G12A G16A G38A G38B
20.44.13↔		BORP KORP MBOR MKOR VAC VAC I VAC II VBOR VKOR
	01	B01A B02A B02B B09A B09B B09C B09D B20A B20B B20C
	03	D06A D06B
	04	E36A E36B
	06	G12A G16A G38A G38B
20.44.14↔		BORP KORP MBOR MKOR VAC VAC I VAC II VBOR VKOR
	01	B01A B02A B02B B09A B09B B09C B09D B20A B20B B20C
	03	D06A D06B
	04	E36A E36B
	06	G12A G16A G38A G38B
20.44.99↔		BORP MBOR VAC VAC I VAC II VBOR
	03	D06A D06B
	04	E36A E36B
	06	G12A G16A G38A G38B
20.45.10↔		BORP MBOR VAC VAC I VAC II VBOR
	03	D06A D06B
	04	E36A E36B
	06	G12A G16A G38A G38B
20.45.11↔		BORP KORP MBOR MKOR VAC VAC I VAC II VBOR VKOR
	01	B01A B02A B02B B09A B09B B09C B09D B20A B20B B20C
	03	D06A D06B
	04	E36A E36B
	06	G12A G16A G38A G38B
20.45.12↔		BORP KORP MBOR MKOR VAC VAC I VAC II VBOR VKOR
	01	B01A B02A B02B B09A B09B B09C B09D B20A B20B B20C
	03	D06A D06B
	04	E36A E36B
	06	G12A G16A G38A G38B
20.45.13↔		BORP KORP MBOR MKOR VAC VAC I VAC II VBOR VKOR
	01	B01A B02A B02B B09A B09B B09C B09D B20A B20B B20C
	03	D06A D06B
	04	E36A E36B
	06	G12A G16A G38A G38B
20.45.14↔		BORP KORP MBOR MKOR VAC VAC I VAC II VBOR VKOR
	01	B01A B02A B02B B09A B09B B09C B09D B20A B20B B20C
	03	D06A D06B
	04	E36A E36B
	06	G12A G16A G38A G38B
20.45.15↔		BORP MBOR VAC VBOR
	01	B01A B02A B02B B09A B09B B09C B09D B20A B20B B20C
	03	D06A D06B
	04	E36A E36B
	06	G12A G16A G38A G38B
20.45.99↔		BORP MBOR VAC VAC I VAC II VBOR
	03	D06A D06B
	04	E36A E36B
	06	G12A G16A G38A G38B
20.49↔		BORP MBOR VAC VAC I VAC II VBOR
	03	D06A D06B
	04	E36A E36B
	06	G12A G16A G38A G38B
20.51.10↔	01	B01A B02A B02B B09A B09B B09C B09D B20A B20B B20C
	03	D06A D06B D06C D09A D09B D30A D30B
20.51.11↔	01	B01A B02A B02B B09A B09B B09C B09D B20A B20B

CHOP	MDC	DRG
		B20C
	03	D06A D06B D06C D09A D09B D30A D30B
20.51.12↔	01	B01A B02A B02B B09A B09B B09C B09D B20A B20B B20C
	03	D06A D06B D06C D09A D09B D30A D30B
20.51.99↔	01	B01A B02A B02B B09A B09B B09C B09D B20A B20B B20C
	03	D06A D06B D06C D09A D09B D30A D30B
20.59↔	03	D09A D09B D30A D30B D30C
20.61.00↔		BORP MBOR VAC VBOR
	03	D09A D09B D30A D30B
	04	E36A E36B
	06	G12A G16A G38A G38B
	21B	X06A X06B X06C
20.61.10↔		BORP MBOR VAC VBOR
	03	D09A D09B D30A D30B
	04	E36A E36B
	06	G12A G16A G38A G38B
	21B	X06A X06B X06C
20.61.99↔		BORP MBOR VAC VBOR
	03	D09A D09B D30A D30B
	04	E36A E36B
	06	G12A G16A G38A G38B
	21B	X06A X06B X06C
20.62.00↔		BORP MBOR VAC VBOR
	03	D09A D09B D30A D30B
	04	E36A E36B
	06	G12A G16A G38A G38B
	21B	X06A X06B X06C
20.62.10↔		BORP MBOR VAC VBOR
	03	D09A D09B D30A D30B
	04	E36A E36B
	06	G12A G16A G38A G38B
	21B	X06A X06B X06C
20.62.99↔		BORP MBOR VAC VAC I VAC II VBOR
	03	D09A D09B D30A D30B
	04	E36A E36B
	06	G12A G16A G38A G38B
	21B	X06A X06B X06C
20.71↔		BORP MBOR VAC VAC I VAC II VBOR

CHOP	MDC	DRG
	03	D06A D06B D06C
	04	E36A E36B
	06	G12A G16A G38A G38B
20.72.00↔	03	D06A D06B D06C
20.72.10↔	03	D06A D06B D06C
20.72.11↔	03	D06A D06B D06C
20.72.12↔	03	D06A D06B D06C
20.72.13↔	03	D06A D06B D06C
20.72.14↔	03	D06A D06B D06C
20.72.99↔	03	D06A D06B D06C
20.79.00↔	01	B01A B02A B02B B09A B09B B09C B09D B20A B20B B20C
	03	D06A D06B D06C
20.79.10↔		BORP MBOR VAC VAC I VAC II VBOR
	01	B01A B02A B02B B09A B09B B09C B09D B20A B20B B20C
	03	D06A D06B D06C
	04	E36A E36B
	06	G12A G16A G38A G38B
20.79.11↔		BORP MBOR VAC VAC I VAC II VBOR
	01	B01A B02A B02B B09A B09B B09C B09D B20A B20B B20C
	03	D06A D06B D06C
	04	E36A E36B
	06	G12A G16A G38A G38B
20.79.20↔		BORP MBOR VAC VAC I VAC II VBOR
	01	B01A B02A B02B B09A B09B B09C B09D B20A B20B B20C
	03	D06A D06B D06C
	04	E36A E36B
	06	G12A G16A G38A G38B
20.79.21↔		BORP MBOR VAC VAC I VAC II VBOR
	01	B01A B02A B02B B09A B09B B09C B09D B20A B20B B20C
	03	D06A D06B D06C
	04	E36A E36B
	06	G12A G16A G38A G38B
20.79.22↔		BORP MBOR VAC VAC I VAC II VBOR
	01	B01A B02A B02B B09A B09B B09C B09D B20A B20B B20C
	03	D06A D06B D06C
	04	E36A E36B
	06	G12A G16A G38A G38B
20.79.23↔		BORP MBOR VAC VAC I VAC II VBOR
	01	B01A B02A B02B B09A B09B B09C

CHOP	MDC	DRG
		B09D B20A B20B B20C
	03	D06A D06B D06C
	04	E36A E36B
	06	G12A G16A G38A G38B
20.79.99↔		BORP MBOR VAC VAC I VAC II VBOR
	01	B01A B02A B02B B09A B09B B09C B09D B20A B20B B20C
	03	D06A D06B D06C
	04	E36A E36B
	06	G12A G16A G38A G38B
20.8↔		BORP MBOR VAC VAC I VAC II VBOR
	03	D09A D09B D30A D30B
	04	E36A E36B
	06	G12A G16A G38A G38B
20.91↔		BORP MBOR VAC VAC I VAC II VBOR
	03	D09A D09B D30A D30B
	04	E36A E36B
	06	G12A G16A G38A G38B
20.92↔		BORP MBOR VAC VAC I VAC II VBOR
	01	B01A B02A B02B B09A B09B B09C B09D B20A B20B B20C
	03	D06A D06B D06C
	04	E36A E36B
	06	G12A G16A G38A G38B
20.93↔		BORP MBOR VAC VAC I VAC II VBOR
	03	D06A D06B D06C
	04	E36A E36B
	06	G12A G16A G38A G38B
	21B	X06A X06B X06C
20.95.00↔		BORP KORP MBOR MKOR VAC VAC I VAC II VBOR VKOR
	03	D23Z
	04	E36A E36B
	06	G12A G16A G38A G38B
20.95.10↔		BORP KORP MBOR MKOR VAC VAC I VAC II VBOR VKOR
	03	D23Z
	04	E36A E36B
	06	G12A G16A G38A G38B
20.95.11↔		BORP KORP MBOR MKOR VAC VAC I VAC II VBOR VKOR
	03	D23Z
	04	E36A E36B
	06	G12A G16A G38A G38B
20.95.99↔		BORP KORP MBOR MKOR VAC VAC I

PROC

PROC

CHOP	MDC	DRG
		VAC II VBOR VKOR
	03	D23Z
	04	E36A E36B
	06	G12A G16A G38A G38B
20.96↔		BORP KORP MBOR MKOR VAC VAC I VAC II VBOR VKOR
	03	D01A D01B
	04	E36A E36B
	06	G12A G16A G38A G38B
20.97↔		BORP KORP MBOR MKOR VAC VAC I VAC II VBOR VKOR
	03	D01A D01B
	04	E36A E36B
	06	G12A G16A G38A G38B
20.98↔		BORP KORP MBOR MKOR VAC VAC I VAC II VBOR VKOR
	03	D01A D01B
	04	E36A E36B
	06	G12A G16A G38A G38B
20.99.10↔		BORP MBOR VAC VAC I VAC II VBOR
	01	B01A B02A B02B B09A B09B B09C B09D B20A B20B B20C
	03	D09A D09B D23Z D30A D30B
	04	E36A E36B
	06	G12A G16A G38A G38B
	08	I15A I15B
	11	L09A L09B
	21B	X06A X06B X06C
	22	Y02A Y02B Y02C
20.99.20↔		BORP MBOR VAC VAC I VAC II VBOR
	01	B01A B02A B02B B09A B09B B09C B09D B20A B20B B20C
	03	D09A D09B D30A D30B
	04	E36A E36B
	06	G12A G16A G38A G38B
	08	I15A I15B
	21B	X06A X06B X06C
	22	Y02A Y02B Y02C
20.99.30↔		BORP MBOR VAC VBOR
	01	B01A B02A B02B B09A B09B B09C B09D B20A B20B B20C
	03	D09A D09B D30A D30B
	04	E36A E36B
	06	G12A G16A G38A G38B
	08	I15A I15B
	21B	X06A X06B X06C
20.99.99↔	01	B01A B02A B02B B09A B09B B09C B09D B20A B20B B20C
	03	D09A D09B D30A D30B
	08	I15A I15B
	21B	X06A X06B X06C
21.04↔		BORP MBOR VAC VAC I VAC II VBOR
	03	D12A D12B
	04	E36A E36B
	05	F21A F21B F21C
	06	G12A G16A G38A G38B
	21B	X06A X06B X06C
21.05↔		BORP MBOR VAC VAC I VAC II VBOR
	03	D12A D12B
	04	E36A E36B
	05	F21A F21B F21C
	06	G12A G16A G38A G38B
	21B	X06A X06B X06C
21.06↔		BORP MBOR VAC VAC I VAC II VBOR
	03	D12A D12B
	04	E36A E36B
	05	F21A F21B F21C
	06	G12A G16A G38A G38B
	21B	X06A X06B X06C
21.07↔		BORP MBOR VAC VAC I VAC II VBOR
	02	C13A C14Z
	03	D09A D09B D30A D30B D30C D38A D38B
	04	E36A E36B
	06	G12A G16A G38A G38B
	08	I28A I28B
	09	J02A J02B J03A J03B J04Z J10A J10B
	21B	X06A X06B X06C
21.09.10↔	03	D12A D12B
21.1↔	02	C13A C14Z
	03	D39Z
	09	J02A J02B J03A J03B J04Z J10A J10B
	21B	X06A X06B X06C
21.31.10↔	02	C13A C14Z
	03	D09A D09B D30A D30B D30C D35Z D38A
	09	J02A J02B J03A J03B J04Z J10A J10B
	21B	X06A X06B X06C
21.31.12↔	02	C13A C14Z
	03	D09A D09B D30A D30B D30C D35Z D38A
	09	J02A J02B J03A J03B J04Z J10A J10B
	21B	X06A X06B X06C
21.32↔	01	B17A B17B
	02	C13A C14Z
	03	D09A D09B D12A D12B D30A D30B D30C D35Z D39Z
	05	F21A F21B F21C
	08	I27A I27B I27C I27D
	09	J02A J02B J03A J03B J04Z J08Z J10A J10B J21Z
	10	K09A K09B
	21B	X06A X06B X06C
21.4X.00↔		BORP MBOR VAC VAC I VAC II VBOR
	01	B17A B17B
	03	D12A D12B D35Z D38A
	04	E36A E36B
	05	F21A F21B F21C
	06	G12A G16A G38A G38B
	08	I27A I27B I27C I27D
	09	J02A J02B J03A J03B J04Z J08Z J10A J10B J21Z J22Z
	10	K09A K09B
	21B	X06A X06B X06C
	22	Y02A Y02B Y02C
21.4X.12↔		BORP MBOR VAC VAC I VAC II VBOR
	01	B17A B17B
	03	D12A D12B D35Z D38A
	04	E36A E36B
	05	F21A F21B F21C
	06	G12A G16A G38A G38B
	08	I27A I27B I27C I27D
	09	J02A J02B J03A J03B J04Z J08Z J10A J10B J21Z
	10	K09A K09B
	21B	X06A X06B X06C
	22	Y02A Y02B Y02C
21.4X.22↔		BORP MBOR VAC VAC I VAC II VBOR
	01	B17A B17B
	03	D12A D12B D35Z D38A
	04	E36A E36B
	05	F21A F21B F21C
	06	G12A G16A G38A G38B
	08	I27A I27B I27C I27D
	09	J02A J02B J03A J03B J04Z J08Z J10A J10B J21Z
	10	K09A K09B
	21B	X06A X06B X06C
	22	Y02A Y02B Y02C
21.4X.32↔		BORP MBOR VAC VAC I VAC II VBOR
	01	B17A B17B
	03	D12A D12B D35Z D38A
	04	E36A E36B
	05	F21A F21B F21C
	06	G12A G16A G38A

CHOP	MDC	DRG
		G38B
	08	I27A I27B I27C I27D
	09	J02A J02B J03A J03B J04Z J08Z J10A J10B J21Z
	10	K09A K09B
	21B	X06A X06B X06C
	22	Y02A Y02B Y02C
21.4X.99↔		BORP MBOR VAC VAC I VAC II VBOR
	01	B17A B17B
	03	D12A D12B D35Z D38A
	04	E36A E36B
	05	F21A F21B F21C
	06	G12A G16A G38A G38B
	08	I27A I27B I27C I27D
	09	J02A J02B J03A J03B J04Z J08Z J10A J10B J21Z J22Z
	10	K09A K09B
	21B	X06A X06B X06C
	22	Y02A Y02B Y02C
21.5↔	02	C13A C14Z
	03	D09A D09B D30A D30B D30C D38A D38B
	04	E02A E02B E02C E07Z
	21B	X06A X06B X06C
21.61↔	02	C13A C14Z
	03	D39Z
	04	E02A E02B E02C E07Z
21.62↔	02	C13A C14Z
	03	D39Z
	21B	X06A X06B X06C
21.69.00↔	02	C13A C14Z
	03	D39Z
	04	E02A E02B E02C E07Z
21.69.10↔	02	C13A C14Z
	03	D39Z
	04	E02A E02B E02C E07Z
21.69.11↔	02	C13A C14Z
	03	D39Z
	04	E02A E02B E02C E07Z
21.69.12↔	02	C13A C14Z
	03	D39Z
	04	E02A E02B E02C E07Z
21.69.99↔	02	C13A C14Z
	03	D39Z
	04	E02A E02B E02C E07Z
21.72↔	03	D25A D25B D28Z D29Z
	08	I17Z
	09	J02A J02B J03A J03B J04Z J08Z J11A J11B
	21B	X06A X06B X06C
21.82↔		BORP MBOR VAC VAC I VAC II VBOR
	02	C13A C14Z
	03	D09A D09B D30A D30B D30C D38A D38B
	04	E36A E36B
	06	G12A G16A G38A G38B
	21B	X06A X06B X06C
21.83.00↔		BORP MBOR VAC VAC I VAC II VBOR
	02	C13A C14Z
	03	D35Z D38A
	04	E02A E02B E02C E07Z E36A E36B
	06	G12A G16A G38A G38B
	08	I28A I28B I28C
	09	J02A J02B J03A J03B J04Z J10A J10B
	21B	X06A X06B X06C
	22	Y02A Y02B Y02C
21.83.10↔		BORP MBOR VAC VAC I VAC II VBOR
	02	C13A C14Z
	03	D35Z D38A
	04	E02A E02B E02C E07Z E36A E36B
	06	G12A G16A G38A G38B
	08	I28A I28B I28C
	09	J02A J02B J03A J03B J04Z J10A J10B
	21B	X06A X06B X06C
	22	Y02A Y02B Y02C
21.83.11↔		BORP MBOR VAC VAC I VAC II VBOR
	02	C13A C14Z
	03	D35Z D38A
	04	E02A E02B E02C E07Z E36A E36B
	06	G12A G16A G38A G38B
	08	I28A I28B I28C
	09	J02A J02B J03A J03B J04Z J10A J10B
	21B	X06A X06B X06C
	22	Y02A Y02B Y02C
21.83.12↔		BORP MBOR VAC VAC I VAC II VBOR
	02	C13A C14Z
	03	D35Z D38A
	04	E02A E02B E02C E07Z E36A E36B
	06	G12A G16A G38A G38B
	08	I28A I28B I28C
	09	J02A J02B J03A J03B J04Z J10A J10B
	21B	X06A X06B X06C
	22	Y02A Y02B Y02C
21.83.20↔		BORP MBOR VAC VAC I VAC II VBOR
	02	C13A C14Z
	03	D35Z D38A
	04	E02A E02B E02C E07Z E36A E36B
	06	G12A G16A G38A G38B
	08	I28A I28B I28C
	09	J02A J02B J03A J03B J04Z J10A J10B
	21B	X06A X06B X06C
	22	Y02A Y02B Y02C
21.83.99↔		BORP MBOR VAC VAC I VAC II VBOR
	02	C13A C14Z
	03	D35Z D38A
	04	E02A E02B E02C E07Z E36A E36B
	06	G12A G16A G38A G38B
	08	I28A I28B I28C
	09	J02A J02B J03A J03B J04Z J10A J10B
	21B	X06A X06B X06C
	22	Y02A Y02B Y02C
21.84↔		BORP MBOR VAC VBOR
	02	C13A C14Z
	03	D35Z D38A
	04	E02A E02B E02C E07Z E36A E36B
	06	G12A G16A G38A G38B
	08	I28A I28B I28C
	09	J02A J02B J03A J03B J04Z J10A J10B
	21B	X06A X06B X06C
	22	Y02A Y02B Y02C
21.85↔		BORP MBOR VAC VBOR
	02	C13A C14Z
	03	D35Z D38A
	04	E02A E02B E02C E07Z E36A E36B
	06	G12A G16A G38A G38B
	08	I28A I28B I28C
	09	J02A J02B J03A J03B J04Z J10A J10B
	21B	X06A X06B X06C
	22	Y02A Y02B Y02C
21.86.00↔		BORP MBOR VAC VBOR
	02	C13A C14Z
	03	D35Z D38A D38B
	04	E02A E02B E02C E07Z E36A E36B
	06	G12A G16A G38A G38B
	08	I28A I28B I28C
	09	J02A J02B J03A J03B J04Z J10A J10B
	21B	X06A X06B X06C
	22	Y02A Y02B Y02C
21.86.10↔		BORP MBOR VAC VBOR
	02	C13A C14Z
	03	D03A D35Z D38A
	04	E02A E02B E02C E07Z E36A E36B

PROC

CHOP	MDC	DRG
	06	G12A G16A G38A G38B
	08	I28A I28B I28C
	09	J02A J02B J03A J03B J04Z J10A J10B
	21B	X06A X06B X06C
	22	Y02A Y02B Y02C
21.86.11↔		BORP MBOR VAC VAC I VAC II VB VBOR
	02	C13A C14Z
	03	D03A D35Z D38A D38B
	04	E02A E02B E02C E07Z E36A E36B
	05	F21A F21B F21C
	06	G12A G16A G38A G38B
	08	I28A I28B I28C
	09	J02A J02B J03A J03B J04Z J10A J10B
	21B	X06A X06B X06C
	22	Y02A Y02B Y02C
21.86.99↔		BORP MBOR VAC VBOR
	02	C13A C14Z
	03	D03A D35Z D38A D38B
	04	E02A E02B E02C E07Z E36A E36B
	06	G12A G16A G38A G38B
	08	I28A I28B I28C
	09	J02A J02B J03A J03B J04Z J10A J10B
	21B	X06A X06B X06C
	22	Y02A Y02B Y02C
21.87↔		BORP MBOR VAC VBOR
	02	C13A C14Z
	03	D03A D35Z D38A
	04	E02A E02B E02C E07Z E36A E36B
	06	G12A G16A G38A G38B
	08	I28A I28B I28C
	09	J02A J02B J03A J03B J04Z J10A J10B
	21B	X06A X06B X06C
21.88.00↔	02	C13A C14Z
	03	D35Z D38A D38B
	04	E02A E02B E02C E07Z
	08	I28A I28B
	09	J02A J02B J03A J03B J04Z J10A J10B
	21B	X06A X06B X06C
21.88.10↔	02	C13A C14Z
	03	D35Z D38A D38B
	04	E02A E02B E02C E07Z
	08	I28A I28B
	09	J02A J02B J03A J03B J04Z J10A J10B
	21B	X06A X06B X06C
	22	Y02A Y02B Y02C
21.88.11↔	02	C13A C14Z
	03	D35Z D38A D38B
	04	E02A E02B E02C E07Z
	08	I28A I28B
	09	J02A J02B J03A J03B J04Z J10A J10B
	21B	X06A X06B X06C
	22	Y02A Y02B Y02C
21.88.12↔	02	C13A C14Z
	03	D35Z D38A D38B
	04	E02A E02B E02C E07Z
	08	I28A I28B
	09	J02A J02B J03A J03B J04Z J10A J10B
	21B	X06A X06B X06C
	22	Y02A Y02B Y02C
21.88.13↔	02	C13A C14Z
	03	D35Z D38A D38B
	04	E02A E02B E02C E07Z
	08	I28A I28B
	09	J02A J02B J03A J03B J04Z J10A J10B
	19	U01A U01B
	21B	X06A X06B X06C
	22	Y02A Y02B Y02C
21.88.14↔	02	C13A C14Z
	03	D35Z D38A D38B
	04	E02A E02B E02C E07Z
	08	I28A I28B
	09	J02A J02B J03A J03B J04Z J10A J10B
	19	U01A U01B
	21B	X06A X06B X06C
	22	Y02A Y02B Y02C
21.88.15↔	02	C13A C14Z
	03	D35Z D38A D38B
	04	E02A E02B E02C E07Z
	08	I28A I28B
	09	J02A J02B J03A J03B J04Z J10A J10B
	19	U01A U01B
	21B	X06A X06B X06C
	22	Y02A Y02B Y02C
21.88.99↔	02	C13A C14Z
	03	D35Z D38A D38B
	04	E02A E02B E02C E07Z
	08	I28A I28B
	09	J02A J02B J03A J03B J04Z J10A J10B
	19	U01A U01B
	21B	X06A X06B X06C
21.89↔		BORP MBOR VAC VBOR
	02	C13A C14Z
	03	D35Z D39Z
	04	E02A E02B E02C E07Z E36A E36B
	06	G12A G16A G38A G38B
	08	I28A I28B I28C
	09	J02A J02B J03A J03B J04Z J10A J10B
	19	U01A U01B
	21B	X06A X06B X06C
21.91↔	02	C13A C14Z
	03	D09A D09B D30A D30B D30C D39Z
	09	J02A J02B J03A J03B J04Z J10A J10B
	21B	X06A X06B X06C
21.99.00↔	02	C13A C14Z
	03	D12A D12B D39Z
	04	E02A E02B E02C E07Z
	21B	X06A X06B X06C
21.99.10↔	02	C13A C14Z
	03	D12A D12B D38A D38B
	04	E02A E02B E02C E07Z
	21B	X06A X06B X06C
21.99.20↔	02	C13A C14Z
	03	D12A D12B D38A D38B
	04	E02A E02B E02C E07Z
	21B	X06A X06B X06C
21.99.99↔	02	C13A C14Z
	03	D12A D12B D39Z
	04	E02A E02B E02C E07Z
	21B	X06A X06B X06C
22.2X.00↔	02	C14Z
22.2X.10↔	01	B09A B09B B09C B09D
	02	C14Z
	03	D06A D06B D06C
	08	I28A I28B
22.2X.11↔	01	B09A B09B B09C B09D
	02	C14Z
	03	D06A D06B D06C
	08	I28A I28B
22.31↔		BORP MBOR VAC VAC I VAC II VBOR
	01	B09A B09B B09C B09D
	03	D06A D06B D06C
	04	E36A E36B
	06	G12A G16A G38A G38B
22.41.00↔		BORP MBOR VAC VAC I VAC II VBOR
	01	B09A B09B B09C B09D
	03	D06A D06B
	04	E36A E36B
	06	G12A G16A G38A G38B
22.41.10↔		BORP MBOR VAC VAC I VAC II VBOR
	01	B09A B09B B09C B09D
	03	D06A D06B

CHOP	MDC	DRG
	04	E36A E36B
	06	G12A G16A G38A G38B
22.41.11↔		BORP MBOR VAC VAC I VAC II VBOR
	01	B09A B09B B09C B09D
	03	D06A D06B
	04	E36A E36B
	06	G12A G16A G38A G38B
22.41.12↔		BORP MBOR VAC VAC I VAC II VBOR
	01	B09A B09B B09C B09D
	03	D06A D06B
	04	E36A E36B
	06	G12A G16A G38A G38B
22.41.99↔		BORP MBOR VAC VAC I VAC II VBOR
	01	B09A B09B B09C B09D
	03	D06A D06B
	04	E36A E36B
	06	G12A G16A G38A G38B
22.42.00↔		BORP MBOR VAC VAC I VAC II VBOR
	01	B09A B09B B09C B09D
	03	D06A D06B
	04	E36A E36B
	06	G12A G16A G38A G38B
22.42.10↔		BORP MBOR VAC VAC I VAC II VBOR
	01	B09A B09B B09C B09D
	03	D06A D06B
	04	E36A E36B
	06	G12A G16A G38A G38B
22.42.11↔		BORP MBOR VAC VAC I VAC II VBOR
	01	B09A B09B B09C B09D
	03	D06A D06B
	04	E36A E36B
	06	G12A G16A G38A G38B
22.42.99↔		BORP MBOR VAC VAC I VAC II VBOR
	01	B09A B09B B09C B09D
	03	D06A D06B
	04	E36A E36B
	06	G12A G16A G38A G38B
22.50↔	03	D06A D06B D06C
22.51↔	01	B01A B02A B02B B09A B09B B09C B09D B20A B20B B20C
	02	C14Z
	03	D06A D06B D06C
22.52↔		BORP MBOR VAC VAC I VAC II VBOR
	01	B01A B02A B02B B09A B09B B09C B09D B20A B20B B20C
	02	C14Z
	03	D06A D06B D06C
	04	E36A E36B
	06	G12A G16A G38A G38B
22.53↔	01	B09A B09B B09C B09D
	03	D06A D06B D06C
22.60↔		BORP MBOR VAC VAC I VAC II VBOR
	03	D06A D06B D06C
	04	E36A E36B
	06	G12A G16A G38A G38B
22.61↔		BORP MBOR VAC VAC I VAC II VBOR
	01	B09A B09B B09C B09D
	03	D06A D06B D06C
	04	E36A E36B
	06	G12A G16A G38A G38B
	08	I28A I28B
22.62.00↔		BORP MBOR VAC VAC I VAC II VBOR
	01	B09A B09B B09C B09D
	03	D06A D06B D06C
	04	E36A E36B
	06	G12A G16A G38A G38B
	08	I28A I28B
22.62.10↔		BORP MBOR VAC VAC I VAC II VBOR
	01	B09A B09B B09C B09D
	03	D06A D06B D06C
	04	E36A E36B
	06	G12A G16A G38A G38B
	08	I28A I28B
22.62.11↔		BORP MBOR VAC VAC I VAC II VBOR
	01	B09A B09B B09C B09D
	03	D06A D06B D06C
	04	E36A E36B
	06	G12A G16A G38A G38B
	08	I28A I28B
22.62.19↔		BORP MBOR VAC VAC I VAC II VBOR
	01	B09A B09B B09C B09D
	03	D06A D06B D06C
	04	E36A E36B
	06	G12A G16A G38A G38B
	08	I28A I28B
22.62.20↔		BORP MBOR VAC VAC I VAC II VBOR
	01	B09A B09B B09C B09D
	03	D06A D06B D06C
	04	E36A E36B
	06	G12A G16A G38A G38B
	08	I28A I28B
22.62.21↔		BORP MBOR VAC VAC I VAC II VBOR
	01	B09A B09B B09C B09D
	03	D06A D06B D06C
	04	E36A E36B
	06	G12A G16A G38A G38B
	08	I28A I28B
22.62.29↔		BORP MBOR VAC VAC I VAC II VBOR
	01	B09A B09B B09C B09D
	03	D06A D06B D06C
	04	E36A E36B
	06	G12A G16A G38A G38B
	08	I28A I28B
22.62.99↔		BORP MBOR VAC VAC I VAC II VBOR
	01	B09A B09B B09C B09D
	03	D06A D06B D06C
	04	E36A E36B
	06	G12A G16A G38A G38B
	08	I28A I28B
22.63.00↔		BORP MBOR VAC VAC I VAC II VBOR
	01	B01A B02A B02B B09A B09B B09C B09D B20A B20B B20C
	03	D06A D06B
	04	E36A E36B
	06	G12A G16A G38A G38B
22.63.10↔		BORP MBOR VAC VAC I VAC II VBOR
	01	B01A B02A B02B B09A B09B B09C B09D B20A B20B B20C
	03	D06A D06B
	04	E36A E36B
	06	G12A G16A G38A G38B
22.63.11↔		BORP MBOR VAC VAC I VAC II VBOR
	01	B01A B02A B02B B09A B09B B09C B09D B20A B20B B20C
	03	D06A D06B
	04	E36A E36B
	06	G12A G16A G38A G38B
22.63.99↔		BORP MBOR VAC VAC I VAC II VBOR
	01	B01A B02A B02B B09A B09B B09C B09D B20A B20B B20C
	03	D06A D06B
	04	E36A E36B
	06	G12A G16A G38A G38B
22.64↔		BORP MBOR VAC VAC I VAC II VBOR
	01	B01A B02A B02B

PROC

PROC

CHOP	MDC	DRG
		B09A B09B B09C B09D B20A B20B B20C
	03	D06A D06B
	04	E36A E36B
	06	G12A G16A G38A G38B
22.71↔		BORP MBOR VAC VAC I VAC II VBOR
	03	D06A D06B
	04	E36A E36B
	06	G12A G16A G38A G38B
	21B	X06A X06B X06C
22.79.00↔		BORP MBOR VAC VBOR
	01	B09A B09B B09C B09D
	03	D06A D06B D25A D25B
	04	E36A E36B
	06	G12A G16A G38A G38B
	08	I15A I15B
	09	J02A J02B J08Z
	21A	W01A W01B W01C
	21B	X06A X06B X06C
22.79.10↔		BORP MBOR VAC VAC I VAC II VBOR
	01	B09A B09B B09C B09D
	03	D06A D06B D25A D25B
	04	E36A E36B
	06	G12A G16A G38A G38B
	08	I15A I15B
	09	J02A J02B J08Z
	21A	W01A W01B W01C
	21B	X06A X06B X06C
22.79.11↔		BORP MBOR VAC VAC I VAC II VBOR
	01	B09A B09B B09C B09D
	03	D06A D06B D25A D25B
	04	E36A E36B
	06	G12A G16A G38A G38B
	08	I15A I15B
	09	J02A J02B J08Z
	21A	W01A W01B W01C
	21B	X06A X06B X06C
22.79.19↔		BORP MBOR VAC VBOR
	01	B09A B09B B09C B09D
	03	D06A D06B D25A D25B
	04	E36A E36B
	06	G12A G16A G38A G38B
	08	I15A I15B
	09	J02A J02B J08Z
	21A	W01A W01B W01C
	21B	X06A X06B X06C
22.9X.00↔	03	D06A D06B D06C
	08	I17Z
22.9X.10↔	03	D06A D06B D06C
	08	I17Z
22.9X.11↔	03	D06A D06B D06C
	08	I17Z
22.9X.12↔	03	D06A D06B D06C
	08	I17Z
22.9X.13↔	03	D06A D06B
	08	I17Z
22.9X.14↔	03	D06A D06B
	08	I17Z
22.9X.20↔	03	D06A D06B
	08	I17Z
22.9X.21↔	03	D06A D06B
	08	I17Z
22.9X.22↔	03	D06A D06B
	08	I17Z
22.9X.23↔	03	D06A D06B
	08	I17Z
22.9X.24↔	03	D06A D06B
	08	I17Z
22.9X.25↔	03	D06A D06B
	08	I17Z
22.9X.29↔	03	D06A D06B D06C
	08	I17Z
22.9X.99↔	03	D06A D06B D06C
	08	I17Z
23.02‡↔	01	B60A
	03	D40Z
23.04‡↔	01	B60A
	03	D40Z
23.10‡↔	01	B60A
	03	D40Z
23.12.11‡↔	01	B60A
	03	D40Z
23.12.12‡↔	01	B60A
	03	D40Z
23.13.11‡↔	01	B60A
	03	D40Z
23.13.12‡↔	01	B60A
	03	D40Z
23.19‡↔	01	B60A
	03	D40Z
23.70‡↔	01	B60A
	03	D40Z
23.73.11‡↔	01	B60A
	03	D40Z
23.73.12‡↔	01	B60A
	03	D40Z
23.79‡↔	01	B60A
	03	D40Z
23.80‡↔	01	B60A
	03	D40Z
23.81.11‡↔	01	B60A
	03	D40Z
23.81.12‡↔	01	B60A
	03	D40Z
23.82.11‡↔	01	B60A
	03	D40Z
23.82.12‡↔	01	B60A
	03	D40Z
23.89‡↔	01	B60A
	03	D40Z
23.A0‡↔	01	B60A
	03	D40Z
23.A1.11‡↔	01	B60A
	03	D40Z
23.A1.12‡↔	01	B60A
	03	D40Z
23.A1.13‡↔	01	B60A
	03	D40Z
24.2X.10↔		BORP MBOR VAC VAC I VAC II VBOR
	03	D08Z D22Z D25A D25B D30A D30B D30C
	04	E36A E36B
	06	G12A G16A G38A G38B
	21B	X06A X06B X06C
24.2X.99↔	03	D08Z D22Z D25A D25B D30A D30B D30C
	21B	X06A X06B X06C
24.4X.00↔		BORP MBOR VAC VBOR
	03	D08Z D22Z D25A D25B D30A D30B D30C
	04	E36A E36B
	06	G12A G16A G38A G38B
24.4X.10↔		BORP MBOR VAC VAC I VAC II VBOR
	03	D08Z D22Z D25A D25B D30A D30B D30C
	04	E36A E36B
	06	G12A G16A G38A G38B
24.4X.11↔		BORP MBOR VAC VAC I VAC II VBOR
	03	D08Z D22Z D25A D25B D30A D30B D30C
	04	E36A E36B
	06	G12A G16A G38A G38B
24.4X.99↔	03	D08Z D22Z D25A D25B D30A D30B D30C
24.5X.00↔		BORP MBOR VAC VBOR
	03	D08Z D22Z D25A D25B D30A D30B D30C
	04	E36A E36B
	06	G12A G16A G38A G38B
	09	J02A J02B J03A J03B J04Z J11A J11B
	21B	X06A X06B X06C
24.5X.10↔		BORP MBOR VAC VAC I VAC II VBOR
	03	D08Z D22Z D25A D25B D30A D30B D30C
	04	E36A E36B
	06	G12A G16A G38A G38B
	09	J02A J02B J03A J03B J04Z J11A J11B
	21B	X06A X06B X06C
24.5X.99↔		BORP MBOR VAC VBOR
	03	D08Z D22Z D25A D25B D30A D30B D30C
	04	E36A E36B
	06	G12A G16A G38A G38B

CHOP	MDC	DRG
	09	J02A J02B J03A J03B J04Z J11A J11B
	21B	X06A X06B X06C
24.91.10↔		BORP MBOR VAC VAC I VAC II VBOR
	03	D08Z D22Z D25A D25B D30A D30B D30C
	04	E36A E36B
	06	G12A G16A G38A G38B
	09	J02A J02B J03A J03B J04Z J11A J11B
	21B	X06A X06B X06C
24.91.11↔		BORP MBOR VAC VAC I VAC II VBOR
	03	D08Z D22Z D25A D25B D30A D30B D30C
	04	E36A E36B
	06	G12A G16A G38A G38B
	09	J02A J02B J03A J03B J04Z J11A J11B
	21B	X06A X06B X06C
	22	Y02A Y02B Y02C
24.91.99↔		BORP MBOR VAC VBOR
	03	D08Z D22Z D25A D25B D30A D30B D30C
	04	E36A E36B
	06	G12A G16A G38A G38B
	09	J02A J02B J03A J03B J04Z J11A J11B
	21B	X06A X06B X06C
24.99.00‡↔	01	B60A
	03	D40Z
24.99.10‡↔	01	B60A
	03	D40Z
24.99.11‡↔	01	B60A
	03	D40Z
24.99.20‡↔	01	B60A
	03	D40Z
24.99.99‡↔	01	B60A
	03	D40Z
25.02↔	03	D08Z D22Z D25A D25B D30A D30B D30C
	09	J02A J02B J03A J03B J04Z J11A J11B
25.1↔	03	D08Z D22Z D25A D25B D30A D30B D30C
25.2X.00↔		BORP KORP MBOR MKOR VAC VAC I VAC II VBOR VKOR
	03	D02A D02B D24A D24B D24C D25A D25B
	04	E36A E36B
	06	G12A G16A G33Z G38A G38B G38C
	07	H33Z
	09	J02A J02B J08Z
	11	L33Z
	21B	X07A X07B
25.2X.09↔		BORP KORP MBOR MKOR VAC VAC I VAC II VBOR VKOR
	03	D02A D02B D24A D24B D24C D25A D25B
	04	E36A E36B
	06	G12A G16A G33Z G38A G38B G38C
	07	H33Z
	09	J02A J02B J08Z
	11	L33Z
	21B	X07A X07B
25.2X.10↔		BORP KORP MBOR MKOR VAC VAC I VAC II VBOR VKOR
	03	D02A D02B D24A D24B D24C D25A D25B
	04	E36A E36B
	06	G12A G16A G33Z G38A G38B G38C
	07	H33Z
	09	J02A J02B J08Z
	11	L33Z
	21B	X07A X07B
25.2X.11↔		BORP KORP MBOR MKOR VAC VAC I VAC II VBOR VKOR
	03	D02A D02B D24A D24B D24C D25A D25B
	04	E36A E36B
	06	G12A G16A G33Z G38A G38B G38C
	07	H33Z
	09	J02A J02B J08Z
	11	L33Z
	21B	X07A X07B
25.2X.12↔		BORP KORP MBOR MKOR VAC VAC I VAC II VBOR VKOR
	03	D02A D02B D24A D24B D24C D25A D25B
	04	E36A E36B
	06	G12A G16A G33Z G38A G38B G38C
	07	H33Z
	09	J02A J02B J08Z
	11	L33Z
	21B	X07A X07B
25.2X.13↔		BORP KORP MBOR MKOR VAC VAC I VAC II VBOR VKOR
	03	D02A D02B D24A D24B D24C D25A D25B
	04	E36A E36B
	06	G12A G16A G33Z G38A G38B G38C
	07	H33Z
	09	J02A J02B J08Z
	11	L33Z
	21B	X07A X07B
25.2X.14↔		BORP KORP MBOR MKOR VAC VAC I VAC II VB VBOR VKOR
	03	D02A D02B D24A D24B D25A D25B
	04	E36A E36B
	05	F04Z
	06	G12A G16A G33Z G38A G38B G38C
	07	H33Z
	08	I02A I02B I02C
	09	J01A J01B J02A J02B J08Z
	11	L33Z
	12	M37Z
	21A	W01A W01B
	21B	X01A X07A X07B
	22	Y02A Y02B
25.2X.19↔		BORP KORP MBOR MKOR VAC VAC I VAC II VBOR VKOR
	03	D02A D02B D24A D24B D24C D25A D25B
	04	E36A E36B
	06	G12A G16A G33Z G38A G38B G38C
	07	H33Z
	09	J02A J02B J08Z
	11	L33Z
	21B	X07A X07B
25.2X.20↔		BORP KORP MBOR MKOR VAC VAC I VAC II VBOR VKOR
	03	D02A D02B D24A D24B D24C D25A D25B
	04	E36A E36B
	06	G12A G16A G33Z G38A G38B G38C
	07	H33Z
	09	J02A J02B J08Z
	11	L33Z
	21B	X07A X07B
25.2X.21↔		BORP KORP MBOR MKOR VAC VAC I VAC II VBOR VKOR
	03	D02A D02B D24A D24B D24C D25A D25B
	04	E36A E36B
	06	G12A G16A G33Z G38A G38B G38C
	07	H33Z
	09	J02A J02B J08Z
	11	L33Z
	21B	X07A X07B
25.2X.22↔		BORP KORP MBOR MKOR VAC VAC I VAC II VBOR VKOR
	03	D02A D02B D24A D24B D24C D25A D25B
	04	E36A E36B
	06	G12A G16A G33Z G38A G38B G38C
	07	H33Z
	09	J02A J02B J08Z
	11	L33Z
	21B	X07A X07B
25.2X.23↔		BORP KORP MBOR

PROC

PROC

CHOP	MDC	DRG
		MKOR VAC VAC I
		VAC II VBOR VKOR
	03	D02A D02B D24A
		D24B D24C D25A
		D25B
	04	E36A E36B
	06	G12A G16A G33Z
		G38A G38B G38C
	07	H33Z
	09	J02A J02B J08Z
	11	L33Z
	21B	X07A X07B
25.2X.24↔		BORP KORP MBOR
		MKOR VAC VAC I
		VAC II VB VBOR
		VKOR
	03	D02A D02B D24A
		D24B D25A D25B
	04	E36A E36B
	05	F04Z
	06	G12A G16A G33Z
		G38A G38B G38C
	07	H33Z
	08	I02A I02B I02C
	09	J01A J01B J02A
		J02B J08Z
	11	L33Z
	12	M37Z
	21A	W01A W01B
	21B	X01A X07A X07B
	22	Y02A Y02B
25.2X.29↔		BORP KORP MBOR
		MKOR VAC VAC I
		VAC II VBOR VKOR
	03	D02A D02B D24A
		D24B D24C D25A
		D25B
	04	E36A E36B
	06	G12A G16A G33Z
		G38A G38B G38C
	07	H33Z
	09	J02A J02B J08Z
	11	L33Z
	21B	X07A X07B
25.2X.30↔		BORP KORP MBOR
		MKOR VAC VAC I
		VAC II VBOR VKOR
	03	D02A D02B D24A
		D24B D24C D25A
		D25B
	04	E36A E36B
	06	G12A G16A G33Z
		G38A G38B G38C
	07	H33Z
	09	J02A J02B J08Z
	11	L33Z
	21B	X07A X07B
25.2X.31↔		BORP KORP MBOR
		MKOR VAC VAC I
		VAC II VBOR VKOR
	03	D02A D02B D24A
		D24B D24C D25A
		D25B
	04	E36A E36B
	06	G12A G16A G33Z
		G38A G38B G38C
	07	H33Z
	09	J02A J02B J08Z
	11	L33Z
	21B	X07A X07B
25.2X.32↔		BORP KORP MBOR
		MKOR VAC VAC I
		VAC II VBOR VKOR
	03	D02A D02B D24A
		D24B D24C D25A
		D25B
	04	E36A E36B
	06	G12A G16A G33Z
		G38A G38B G38C
	07	H33Z
	09	J02A J02B J08Z
	11	L33Z
	21B	X07A X07B
25.2X.33↔		BORP KORP MBOR
		MKOR VAC VAC I
		VAC II VBOR VKOR
	03	D02A D02B D24A
		D24B D24C D25A
		D25B
	04	E36A E36B
	06	G12A G16A G33Z
		G38A G38B G38C
	07	H33Z
	09	J02A J02B J08Z
	11	L33Z
	21B	X07A X07B
25.2X.34↔		BORP KORP MBOR
		MKOR VAC VAC I
		VAC II VB VBOR
		VKOR
	03	D02A D02B D24A
		D24B D25A D25B
	04	E36A E36B
	05	F04Z
	06	G12A G16A G33Z
		G38A G38B G38C
	07	H33Z
	08	I02A I02B I02C
	09	J01A J01B J02A
		J02B J08Z
	11	L33Z
	12	M37Z
	21A	W01A W01B
	21B	X01A X07A X07B
	22	Y02A Y02B
25.2X.39↔		BORP KORP MBOR
		MKOR VAC VAC I
		VAC II VBOR VKOR
	03	D02A D02B D24A
		D24B D24C D25A
		D25B
	04	E36A E36B
	06	G12A G16A G33Z
		G38A G38B G38C
	07	H33Z
	09	J02A J02B J08Z
	11	L33Z
	21B	X07A X07B
25.2X.40↔		BORP KORP MBOR
		MKOR VAC VAC I
		VAC II VBOR VKOR
	03	D02A D02B D24A
		D24B D24C D25A
		D25B
	04	E36A E36B
	06	G12A G16A G33Z
		G38A G38B G38C
	07	H33Z
	09	J02A J02B J08Z
	11	L33Z
	21B	X07A X07B
25.2X.41↔		BORP KORP MBOR
		MKOR VAC VAC I
		VAC II VBOR VKOR
	03	D02A D02B D24A
		D24B D24C D25A
		D25B
	04	E36A E36B
	06	G12A G16A G33Z
		G38A G38B G38C
	07	H33Z
	09	J02A J02B J08Z
	11	L33Z
	21B	X07A X07B
25.2X.42↔		BORP KORP MBOR
		MKOR VAC VAC I
		VAC II VBOR VKOR
	03	D02A D02B D24A
		D24B D24C D25A
		D25B
	04	E36A E36B
	06	G12A G16A G33Z
		G38A G38B G38C
	07	H33Z
	09	J02A J02B J08Z
	11	L33Z
	21B	X07A X07B
25.2X.43↔		BORP KORP MBOR
		MKOR VAC VAC I
		VAC II VBOR VKOR
	03	D02A D02B D24A
		D24B D24C D25A
		D25B
	04	E36A E36B
	06	G12A G16A G33Z
		G38A G38B G38C
	07	H33Z
	09	J02A J02B J08Z
	11	L33Z
	21B	X07A X07B
25.2X.44↔		BORP KORP MBOR
		MKOR VAC VAC I
		VAC II VB VBOR
		VKOR
	03	D02A D02B D24A
		D24B D25A D25B
	04	E36A E36B
	05	F04Z
	06	G12A G16A G33Z
		G38A G38B G38C
	07	H33Z
	08	I02A I02B I02C
	09	J01A J01B J02A
		J02B J08Z
	11	L33Z
	12	M37Z
	21A	W01A W01B
	21B	X01A X07A X07B
	22	Y02A Y02B
25.2X.49↔		BORP KORP MBOR
		MKOR VAC VAC I
		VAC II VBOR VKOR
	03	D02A D02B D24A
		D24B D24C D25A
		D25B
	04	E36A E36B
	06	G12A G16A G33Z
		G38A G38B G38C
	07	H33Z
	09	J02A J02B J08Z

CHOP	MDC	DRG
	11	L33Z
	21B	X07A X07B
25.2X.50↔		BORP KORP MBOR MKOR VAC VAC I VAC II VBOR VKOR
	03	D02A D02B D24A D24B D24C D25A D25B
	04	E36A E36B
	06	G12A G16A G33Z G38A G38B G38C
	07	H33Z
	09	J02A J02B J08Z
	11	L33Z
	21B	X07A X07B
25.2X.51↔		BORP KORP MBOR MKOR VAC VAC I VAC II VBOR VKOR
	03	D02A D02B D24A D24B D24C D25A D25B
	04	E36A E36B
	06	G12A G16A G33Z G38A G38B G38C
	07	H33Z
	09	J02A J02B J08Z
	11	L33Z
	21B	X07A X07B
25.2X.52↔		BORP KORP MBOR MKOR VAC VAC I VAC II VBOR VKOR
	03	D02A D02B D24A D24B D24C D25A D25B
	04	E36A E36B
	06	G12A G16A G33Z G38A G38B G38C
	07	H33Z
	09	J02A J02B J08Z
	11	L33Z
	21B	X07A X07B
25.2X.53↔		BORP KORP MBOR MKOR VAC VAC I VAC II VBOR VKOR
	03	D02A D02B D24A D24B D24C D25A D25B
	04	E36A E36B
	06	G12A G16A G33Z G38A G38B G38C
	07	H33Z
	09	J02A J02B J08Z
	11	L33Z
	21B	X07A X07B
25.2X.54↔		BORP KORP MBOR MKOR VAC VAC I VAC II VB VBOR VKOR
	03	D02A D02B D24A D24B D25A D25B
	04	E36A E36B
	05	F04Z
	06	G12A G16A G33Z G38A G38B G38C
	07	H33Z
	08	I02A I02B I02C
	09	J01A J01B J02A J02B J08Z
	11	L33Z
	12	M37Z
	21A	W01A W01B
	21B	X01A X07A X07B
	22	Y02A Y02B
25.2X.59↔		BORP KORP MBOR MKOR VAC VAC I VAC II VBOR VKOR
	03	D02A D02B D24A D24B D24C D25A D25B
	04	E36A E36B
	06	G12A G16A G33Z G38A G38B G38C
	07	H33Z
	09	J02A J02B J08Z
	11	L33Z
	21B	X07A X07B
25.3X.00↔		BORP KORP MBOR MKOR VAC VAC I VAC II VBOR VKOR
	03	D02A D02B D24A D24B D24C D25A D25B
	04	E36A E36B
	06	G12A G16A G33Z G38A G38B G38C
	07	H33Z
	09	J02A J02B J08Z
	11	L33Z
	21B	X07A X07B
25.3X.09↔		BORP KORP MBOR MKOR VAC VAC I VAC II VBOR VKOR
	03	D02A D02B D24A D24B D24C D25A D25B
	04	E36A E36B
	06	G12A G16A G33Z G38A G38B G38C
	07	H33Z
	09	J02A J02B J08Z
	11	L33Z
	21B	X07A X07B
25.3X.10↔		BORP KORP MBOR MKOR VAC VAC I VAC II VBOR VKOR
	03	D02A D02B D24A D24B D24C D25A D25B
	04	E36A E36B
	06	G12A G16A G33Z G38A G38B G38C
	07	H33Z
	09	J02A J02B J08Z
	11	L33Z
	21B	X07A X07B
25.3X.11↔		BORP KORP MBOR MKOR VAC VAC I VAC II VBOR VKOR
	03	D02A D02B D24A D24B D24C D25A D25B
	04	E36A E36B
	06	G12A G16A G33Z G38A G38B G38C
	07	H33Z
	09	J02A J02B J08Z
	11	L33Z
	21B	X07A X07B
25.3X.12↔		BORP KORP MBOR MKOR VAC VAC I VAC II VBOR VKOR
	03	D02A D02B D24A D24B D24C D25A D25B
	04	E36A E36B
	06	G12A G16A G33Z G38A G38B G38C
	07	H33Z
	09	J02A J02B J08Z
	11	L33Z
	21B	X07A X07B
25.3X.13↔		BORP KORP MBOR MKOR VAC VAC I VAC II VBOR VKOR
	03	D02A D02B D24A D24B D24C D25A D25B
	04	E36A E36B
	06	G12A G16A G33Z G38A G38B G38C
	07	H33Z
	09	J02A J02B J08Z
	11	L33Z
	21B	X07A X07B
25.3X.14↔		BORP KORP MBOR MKOR VAC VAC I VAC II VB VBOR VKOR
	03	D02A D02B D24A D24B D25A D25B
	04	E36A E36B
	05	F04Z
	06	G12A G16A G33Z G38A G38B G38C
	07	H33Z
	08	I02A I02B I02C
	09	J01A J01B J02A J02B J08Z
	11	L33Z
	12	M37Z
	21A	W01A W01B
	21B	X01A X07A X07B
	22	Y02A Y02B
25.3X.19↔		BORP KORP MBOR MKOR VAC VAC I VAC II VBOR VKOR
	03	D02A D02B D24A D24B D24C D25A D25B
	04	E36A E36B
	06	G12A G16A G33Z G38A G38B G38C
	07	H33Z
	09	J02A J02B J08Z
	11	L33Z
	21B	X07A X07B
25.3X.20↔		BORP KORP MBOR MKOR VAC VAC I VAC II VBOR VKOR
	03	D02A D02B D24A D24B D24C D25A D25B
	04	E36A E36B
	06	G12A G16A G33Z G38A G38B G38C
	07	H33Z
	09	J02A J02B J08Z
	11	L33Z
	21B	X07A X07B
25.3X.21↔		BORP KORP MBOR

PROC

PROC

CHOP	MDC	DRG
		MKOR VAC VAC I VAC II VBOR VKOR
	03	D02A D02B D24A D24B D24C D25A D25B
	04	E36A E36B
	06	G12A G16A G33Z G38A G38B G38C
	07	H33Z
	09	J02A J02B J08Z
	11	L33Z
	21B	X07A X07B
25.3X.22↔		BORP KORP MBOR MKOR VAC VAC I VAC II VBOR VKOR
	03	D02A D02B D24A D24B D24C D25A D25B
	04	E36A E36B
	06	G12A G16A G33Z G38A G38B G38C
	07	H33Z
	09	J02A J02B J08Z
	11	L33Z
	21B	X07A X07B
25.3X.23↔		BORP KORP MBOR MKOR VAC VAC I VAC II VBOR VKOR
	03	D02A D02B D24A D24B D24C D25A D25B
	04	E36A E36B
	06	G12A G16A G33Z G38A G38B G38C
	07	H33Z
	09	J02A J02B J08Z
	11	L33Z
	21B	X07A X07B
25.3X.24↔		BORP KORP MBOR MKOR VAC VAC I VAC II VB VBOR VKOR
	03	D02A D02B D24A D24B D25A D25B
	04	E36A E36B
	05	F04Z
	06	G12A G16A G33Z G38A G38B G38C
	07	H33Z
	08	I02A I02B I02C
	09	J01A J01B J02A J02B J08Z
	11	L33Z
	12	M37Z
	21A	W01A W01B
	21B	X01A X07A X07B
	22	Y02A Y02B
25.3X.29↔		BORP KORP MBOR MKOR VAC VAC I VAC II VBOR VKOR
	03	D02A D02B D24A D24B D24C D25A D25B
	04	E36A E36B
	06	G12A G16A G33Z G38A G38B G38C
	07	H33Z
	09	J02A J02B J08Z
	11	L33Z
	21B	X07A X07B
25.3X.30↔		BORP KORP MBOR MKOR VAC VAC I VAC II VBOR VKOR
	03	D02A D02B D24A D24B D24C D25A D25B
	04	E36A E36B
	06	G12A G16A G33Z G38A G38B G38C
	07	H33Z
	09	J02A J02B J08Z
	11	L33Z
	21B	X07A X07B
25.3X.31↔		BORP KORP MBOR MKOR VAC VAC I VAC II VBOR VKOR
	03	D02A D02B D24A D24B D24C D25A D25B
	04	E36A E36B
	06	G12A G16A G33Z G38A G38B G38C
	07	H33Z
	09	J02A J02B J08Z
	11	L33Z
	21B	X07A X07B
25.3X.32↔		BORP KORP MBOR MKOR VAC VAC I VAC II VBOR VKOR
	03	D02A D02B D24A D24B D24C D25A D25B
	04	E36A E36B
	06	G12A G16A G33Z G38A G38B G38C
	07	H33Z
	09	J02A J02B J08Z
	11	L33Z
	21B	X07A X07B
25.3X.33↔		BORP KORP MBOR MKOR VAC VAC I VAC II VBOR VKOR
	03	D02A D02B D24A D24B D24C D25A D25B
	04	E36A E36B
	06	G12A G16A G33Z G38A G38B G38C
	07	H33Z
	09	J02A J02B J08Z
	11	L33Z
	21B	X07A X07B
25.3X.34↔		BORP KORP MBOR MKOR VAC VAC I VAC II VB VBOR VKOR
	03	D02A D02B D24A D24B D25A D25B
	04	E36A E36B
	05	F04Z
	06	G12A G16A G33Z G38A G38B G38C
	07	H33Z
	08	I02A I02B I02C
	09	J01A J01B J02A J02B J08Z
	11	L33Z
	12	M37Z
	21A	W01A W01B
	21B	X01A X07A X07B
	22	Y02A Y02B
25.3X.39↔		BORP KORP MBOR MKOR VAC VAC I VAC II VBOR VKOR
	03	D02A D02B D24A D24B D24C D25A D25B
	04	E36A E36B
	06	G12A G16A G33Z G38A G38B G38C
	07	H33Z
	09	J02A J02B J08Z
	11	L33Z
	21B	X07A X07B
25.3X.40↔		BORP KORP MBOR MKOR VAC VAC I VAC II VBOR VKOR
	03	D02A D02B D24A D24B D24C D25A D25B
	04	E36A E36B
	06	G12A G16A G33Z G38A G38B G38C
	07	H33Z
	09	J02A J02B J08Z
	11	L33Z
	21B	X07A X07B
25.3X.41↔		BORP KORP MBOR MKOR VAC VAC I VAC II VBOR VKOR
	03	D02A D02B D24A D24B D24C D25A D25B
	04	E36A E36B
	06	G12A G16A G33Z G38A G38B G38C
	07	H33Z
	09	J02A J02B J08Z
	11	L33Z
	21B	X07A X07B
25.3X.42↔		BORP KORP MBOR MKOR VAC VAC I VAC II VBOR VKOR
	03	D02A D02B D24A D24B D24C D25A D25B
	04	E36A E36B
	06	G12A G16A G33Z G38A G38B G38C
	07	H33Z
	09	J02A J02B J08Z
	11	L33Z
	21B	X07A X07B
25.3X.43↔		BORP KORP MBOR MKOR VAC VAC I VAC II VBOR VKOR
	03	D02A D02B D24A D24B D24C D25A D25B
	04	E36A E36B
	06	G12A G16A G33Z G38A G38B G38C
	07	H33Z
	09	J02A J02B J08Z
	11	L33Z
	21B	X07A X07B
25.3X.44↔		BORP KORP MBOR MKOR VAC VAC I VAC II VB VBOR VKOR

CHOP	MDC	DRG
	03	D02A D02B D24A D24B D25A D25B
	04	E36A E36B
	05	F04Z
	06	G12A G16A G33Z G38A G38B G38C
	07	H33Z
	08	I02A I02B I02C
	09	J01A J01B J02A J02B J08Z
	11	L33Z
	12	M37Z
	21A	W01A W01B
	21B	X01A X07A X07B
	22	Y02A Y02B
25.3X.49↔		BORP KORP MBOR MKOR VAC VAC I VAC II VBOR VKOR
	03	D02A D02B D24A D24B D24C D25A D25B
	04	E36A E36B
	06	G12A G16A G33Z G38A G38B G38C
	07	H33Z
	09	J02A J02B J08Z
	11	L33Z
	21B	X07A X07B
25.3X.50↔		BORP KORP MBOR MKOR VAC VAC I VAC II VBOR VKOR
	03	D02A D02B D24A D24B D24C D25A D25B
	04	E36A E36B
	06	G12A G16A G33Z G38A G38B G38C
	07	H33Z
	09	J02A J02B J08Z
	11	L33Z
	21B	X07A X07B
25.3X.51↔		BORP KORP MBOR MKOR VAC VAC I VAC II VBOR VKOR
	03	D02A D02B D24A D24B D24C D25A D25B
	04	E36A E36B
	06	G12A G16A G33Z G38A G38B G38C
	07	H33Z
	09	J02A J02B J08Z
	11	L33Z
	21B	X07A X07B
25.3X.52↔		BORP KORP MBOR MKOR VAC VAC I VAC II VBOR VKOR
	03	D02A D02B D24A D24B D24C D25A D25B
	04	E36A E36B
	06	G12A G16A G33Z G38A G38B G38C
	07	H33Z
	09	J02A J02B J08Z
	11	L33Z
	21B	X07A X07B
25.3X.53↔		BORP KORP MBOR MKOR VAC VAC I VAC II VBOR VKOR
	03	D02A D02B D24A D24B D24C D25A
	04	E36A E36B
	06	G12A G16A G33Z G38A G38B G38C
	07	H33Z
	09	J02A J02B J08Z
	11	L33Z
	21B	X07A X07B
25.3X.54↔		BORP KORP MBOR MKOR VAC VAC I VAC II VB VBOR VKOR
	03	D02A D02B D24A D24B D25A D25B
	04	E36A E36B
	05	F04Z
	06	G12A G16A G33Z G38A G38B G38C
	07	H33Z
	08	I02A I02B I02C
	09	J01A J01B J02A J02B J08Z
	11	L33Z
	12	M37Z
	21A	W01A W01B
	21B	X01A X07A X07B
	22	Y02A Y02B
25.3X.59↔		BORP KORP MBOR MKOR VAC VAC I VAC II VBOR VKOR
	03	D02A D02B D24A D24B D24C D25A D25B
	04	E36A E36B
	06	G12A G16A G33Z G38A G38B G38C
	07	H33Z
	09	J02A J02B J08Z
	11	L33Z
	21B	X07A X07B
25.4X.00↔		BORP KORP MBOR MKOR VAC VAC I VAC II VBOR VKOR
	03	D02A D02B D24A D24B D24C D25A D25B
	04	E36A E36B
	06	G12A G16A G33Z G38A G38B G38C
	07	H33Z
	09	J02A J02B J08Z
	11	L33Z
	21B	X07A X07B
25.4X.10↔		BORP KORP MBOR MKOR VAC VAC I VAC II VBOR VKOR
	03	D02A D02B D24A D24B D24C D25A D25B
	04	E36A E36B
	06	G12A G16A G33Z G38A G38B G38C
	07	H33Z
	09	J02A J02B J08Z
	11	L33Z
	21B	X07A X07B
25.4X.11↔		BORP KORP MBOR MKOR VAC VAC I VAC II VBOR VKOR
	03	D02A D02B D24A D24B D24C D25A D25B
	04	E36A E36B
	06	G12A G16A G33Z G38A G38B G38C
	07	H33Z
	09	J02A J02B J08Z
	11	L33Z
	21B	X07A X07B
25.4X.12↔		BORP KORP MBOR MKOR VAC VAC I VAC II VBOR VKOR
	03	D02A D02B D24A D24B D24C D25A D25B
	04	E36A E36B
	06	G12A G16A G33Z G38A G38B G38C
	07	H33Z
	09	J02A J02B J08Z
	11	L33Z
	21B	X07A X07B
25.4X.13↔		BORP KORP MBOR MKOR VAC VAC I VAC II VBOR VKOR
	03	D02A D02B D24A D24B D24C D25A D25B
	04	E36A E36B
	06	G12A G16A G33Z G38A G38B G38C
	07	H33Z
	09	J02A J02B J08Z
	11	L33Z
	21B	X07A X07B
25.4X.14↔		BORP KORP MBOR MKOR VAC VAC I VAC II VB VBOR VKOR
	03	D02A D02B D24A D24B D25A D25B
	04	E36A E36B
	05	F04Z
	06	G12A G16A G33Z G38A G38B G38C
	07	H33Z
	08	I02A I02B I02C
	09	J01A J01B J02A J02B J08Z
	11	L33Z
	12	M37Z
	21A	W01A W01B
	21B	X01A X07A X07B
	22	Y02A Y02B
25.4X.19↔		BORP KORP MBOR MKOR VAC VAC I VAC II VBOR VKOR
	03	D02A D02B D24A D24B D24C D25A D25B
	04	E36A E36B
	06	G12A G16A G33Z G38A G38B G38C
	07	H33Z
	09	J02A J02B J08Z
	11	L33Z
	21B	X07A X07B
25.4X.20↔		BORP KORP MBOR

PROC

PROC

CHOP	MDC	DRG
		MKOR VAC VAC I
		VAC II VBOR VKOR
	03	D02A D02B D24A
		D24B D24C D25A
		D25B
	04	E36A E36B
	06	G12A G16A G33Z
		G38A G38B G38C
	07	H33Z
	09	J02A J02B J08Z
	11	L33Z
	21B	X07A X07B
25.4X.21↔		BORP KORP MBOR
		MKOR VAC VAC I
		VAC II VBOR VKOR
	03	D02A D02B D24A
		D24B D24C D25A
		D25B
	04	E36A E36B
	06	G12A G16A G33Z
		G38A G38B G38C
	07	H33Z
	09	J02A J02B J08Z
	11	L33Z
	21B	X07A X07B
25.4X.22↔		BORP KORP MBOR
		MKOR VAC VAC I
		VAC II VBOR VKOR
	03	D02A D02B D24A
		D24B D24C D25A
		D25B
	04	E36A E36B
	06	G12A G16A G33Z
		G38A G38B G38C
	07	H33Z
	09	J02A J02B J08Z
	11	L33Z
	21B	X07A X07B
25.4X.23↔		BORP KORP MBOR
		MKOR VAC VAC I
		VAC II VBOR VKOR
	03	D02A D02B D24A
		D24B D24C D25A
		D25B
	04	E36A E36B
	06	G12A G16A G33Z
		G38A G38B G38C
	07	H33Z
	09	J02A J02B J08Z
	11	L33Z
	21B	X07A X07B
25.4X.24↔		BORP KORP MBOR
		MKOR VAC VAC I
		VAC II VB VBOR
		VKOR
	03	D02A D02B D24A
		D24B D25A D25B
	04	E36A E36B
	05	F04Z
	06	G12A G16A G33Z
		G38A G38B G38C
	07	H33Z
	08	I02A I02B I02C
	09	J01A J01B J02A
		J02B J08Z
	11	L33Z
	12	M37Z
	21A	W01A W01B
	21B	X01A X07A X07B
	22	Y02A Y02B
25.4X.29↔		BORP KORP MBOR
		MKOR VAC VAC I
		VAC II VBOR VKOR
	03	D02A D02B D24A
		D24B D24C D25A
		D25B
	04	E36A E36B
	06	G12A G16A G33Z
		G38A G38B G38C
	07	H33Z
	09	J02A J02B J08Z
	11	L33Z
	21B	X07A X07B
25.4X.30↔		BORP KORP MBOR
		MKOR VAC VAC I
		VAC II VBOR VKOR
	03	D02A D02B D24A
		D24B D24C D25A
		D25B
	04	E36A E36B
	06	G12A G16A G33Z
		G38A G38B G38C
	07	H33Z
	09	J02A J02B J08Z
	11	L33Z
	21B	X07A X07B
25.4X.31↔		BORP KORP MBOR
		MKOR VAC VAC I
		VAC II VBOR VKOR
	03	D02A D02B D24A
		D24B D24C D25A
		D25B
	04	E36A E36B
	06	G12A G16A G33Z
		G38A G38B G38C
	07	H33Z
	09	J02A J02B J08Z
	11	L33Z
	21B	X07A X07B
25.4X.32↔		BORP KORP MBOR
		MKOR VAC VAC I
		VAC II VBOR VKOR
	03	D02A D02B D24A
		D24B D24C D25A
		D25B
	04	E36A E36B
	06	G12A G16A G33Z
		G38A G38B G38C
	07	H33Z
	09	J02A J02B J08Z
	11	L33Z
	21B	X07A X07B
25.4X.33↔		BORP KORP MBOR
		MKOR VAC VAC I
		VAC II VBOR VKOR
	03	D02A D02B D24A
		D24B D24C D25A
		D25B
	04	E36A E36B
	06	G12A G16A G33Z
		G38A G38B G38C
	07	H33Z
	09	J02A J02B J08Z
	11	L33Z
	21B	X07A X07B
25.4X.34↔		BORP KORP MBOR
		MKOR VAC VAC I
		VAC II VB VBOR
		VKOR
	03	D02A D02B D24A
		D24B D25A D25B
	04	E36A E36B
	05	F04Z
	06	G12A G16A G33Z
		G38A G38B G38C
	07	H33Z
	08	I02A I02B I02C
	09	J01A J01B J02A
		J02B J08Z
	11	L33Z
	12	M37Z
	21A	W01A W01B
	21B	X01A X07A X07B
	22	Y02A Y02B
25.4X.39↔		BORP KORP MBOR
		MKOR VAC VAC I
		VAC II VBOR VKOR
	03	D02A D02B D24A
		D24B D24C D25A
		D25B
	04	E36A E36B
	06	G12A G16A G33Z
		G38A G38B G38C
	07	H33Z
	09	J02A J02B J08Z
	11	L33Z
	21B	X07A X07B
25.4X.40↔		BORP KORP MBOR
		MKOR VAC VAC I
		VAC II VBOR VKOR
	03	D02A D02B D24A
		D24B D24C D25A
		D25B
	04	E36A E36B
	06	G12A G16A G33Z
		G38A G38B G38C
	07	H33Z
	09	J02A J02B J08Z
	11	L33Z
	21B	X07A X07B
25.4X.41↔		BORP KORP MBOR
		MKOR VAC VAC I
		VAC II VBOR VKOR
	03	D02A D02B D24A
		D24B D24C D25A
		D25B
	04	E36A E36B
	06	G12A G16A G33Z
		G38A G38B G38C
	07	H33Z
	09	J02A J02B J08Z
	11	L33Z
	21B	X07A X07B
25.4X.42↔		BORP KORP MBOR
		MKOR VAC VAC I
		VAC II VBOR VKOR
	03	D02A D02B D24A
		D24B D24C D25A
		D25B
	04	E36A E36B
	06	G12A G16A G33Z
		G38A G38B G38C
	07	H33Z
	09	J02A J02B J08Z
	11	L33Z
	21B	X07A X07B
25.4X.43↔		BORP KORP MBOR
		MKOR VAC VAC I
		VAC II VBOR VKOR
	03	D02A D02B D24A

CHOP	MDC	DRG
		D24B D24C D25A D25B
	04	E36A E36B
	06	G12A G16A G33Z G38A G38B G38C
	07	H33Z
	09	J02A J02B J08Z
	11	L33Z
	21B	X07A X07B
25.4X.44↔		BORP KORP MBOR MKOR VAC VAC I VAC II VB VBOR VKOR
	03	D02A D02B D24A D24B D25A D25B
	04	E36A E36B
	05	F04Z
	06	G12A G16A G33Z G38A G38B G38C
	07	H33Z
	08	I02A I02B I02C
	09	J01A J01B J02A J02B J08Z
	11	L33Z
	12	M37Z
	21A	W01A W01B
	21B	X01A X07A X07B
	22	Y02A Y02B
25.4X.49↔		BORP KORP MBOR MKOR VAC VAC I VAC II VBOR VKOR
	03	D02A D02B D24A D24B D24C D25A D25B
	04	E36A E36B
	06	G12A G16A G33Z G38A G38B G38C
	07	H33Z
	09	J02A J02B J08Z
	11	L33Z
	21B	X07A X07B
25.4X.50↔		BORP KORP MBOR MKOR VAC VAC I VAC II VBOR VKOR
	03	D02A D02B D24A D24B D24C D25A D25B
	04	E36A E36B
	06	G12A G16A G33Z G38A G38B G38C
	07	H33Z
	09	J02A J02B J08Z
	11	L33Z
	21B	X07A X07B
25.4X.51↔		BORP KORP MBOR MKOR VAC VAC I VAC II VBOR VKOR
	03	D02A D02B D24A D24B D24C D25A D25B
	04	E36A E36B
	06	G12A G16A G33Z G38A G38B G38C
	07	H33Z
	09	J02A J02B J08Z
	11	L33Z
	21B	X07A X07B
25.4X.52↔		BORP KORP MBOR MKOR VAC VAC I VAC II VBOR VKOR
	03	D02A D02B D24A D24B D24C D25A D25B
	04	E36A E36B
	06	G12A G16A G33Z G38A G38B G38C
	07	H33Z
	09	J02A J02B J08Z
	11	L33Z
	21B	X07A X07B
25.4X.53↔		BORP KORP MBOR MKOR VAC VAC I VAC II VBOR VKOR
	03	D02A D02B D24A D24B D24C D25A D25B
	04	E36A E36B
	06	G12A G16A G33Z G38A G38B G38C
	07	H33Z
	09	J02A J02B J08Z
	11	L33Z
	21B	X07A X07B
25.4X.54↔		BORP KORP MBOR MKOR VAC VAC I VAC II VB VBOR VKOR
	03	D02A D02B D24A D24B D25A D25B
	04	E36A E36B
	05	F04Z
	06	G12A G16A G33Z G38A G38B G38C
	07	H33Z
	08	I02A I02B I02C
	09	J01A J01B J02A J02B J08Z
	11	L33Z
	12	M37Z
	21A	W01A W01B
	21B	X01A X07A X07B
	22	Y02A Y02B
25.4X.59↔		BORP KORP MBOR MKOR VAC VAC I VAC II VBOR VKOR
	03	D02A D02B D24A D24B D24C D25A D25B
	04	E36A E36B
	06	G12A G16A G33Z G38A G38B G38C
	07	H33Z
	09	J02A J02B J08Z
	11	L33Z
	21B	X07A X07B
25.4X.99↔		BORP KORP MBOR MKOR VAC VAC I VAC II VBOR VKOR
	03	D02A D02B D24A D24B D24C D25A D25B
	04	E36A E36B
	06	G12A G16A G33Z G38A G38B G38C
	07	H33Z
	09	J02A J02B J08Z
	11	L33Z
	21B	X07A X07B
25.59.00↔		BORP MBOR VAC VAC I VAC II VBOR
	03	D08Z D22Z D25A D25B D30A D30B D30C
	04	E07Z E36A E36B
	06	G12A G16A G38A G38B
	21B	X06A X06B X06C
	22	Y02A Y02B Y02C
25.59.10↔		BORP MBOR VAC VAC I VAC II VBOR
	03	D08Z D22Z D25A D25B D30A D30B D30C
	04	E07Z E36A E36B
	06	G12A G16A G38A G38B
	21B	X06A X06B X06C
	22	Y02A Y02B Y02C
25.59.11↔		BORP MBOR VAC VAC I VAC II VBOR
	03	D25A D25B
	04	E07Z E36A E36B
	06	G12A G16A G38A G38B
	21B	X06A X06B X06C
	22	Y02A Y02B Y02C
25.59.99↔		BORP MBOR VAC VAC I VAC II VBOR
	03	D08Z D22Z D25A D25B D30A D30B D30C
	04	E07Z E36A E36B
	06	G12A G16A G38A G38B
	21B	X06A X06B X06C
	22	Y02A Y02B Y02C
25.93↔	03	D08Z D22Z D25A D25B D30A D30B D30C
25.94↔	03	D08Z D22Z D25A D25B D30A D30B D30C
26.11‡↔		AKBB
	01	B60A
	03	D86A
	16	Q86A
26.12↔	03	D06A D06B D06C
	08	I28A I28B I28C
26.21↔		BORP MBOR VAC VBOR
	03	D06A D06B D06C
	04	E36A E36B
	06	G12A G16A G38A G38B
26.29.00↔		BORP MBOR VAC VBOR
	03	D06A D06B D06C
	04	E36A E36B
	06	G12A G16A G38A G38B
26.29.10↔		BORP MBOR VAC VBOR
	03	D06A D06B D06C
	04	E36A E36B
	06	G12A G16A G38A G38B
26.29.99↔		BORP MBOR VAC VBOR
	03	D06A D06B D06C
	04	E36A E36B

PROC

PROC

CHOP	MDC	DRG
	06	G12A G16A G38A G38B
26.30↔		BORP MBOR VAC VBOR
	03	D06A D06B D06C
	04	E36A E36B
	06	G12A G16A G38A G38B
26.31.00↔		BORP MBOR VAC VAC I VAC II VBOR
	03	D05A D05B
	04	E36A E36B
	06	G12A G16A G38A G38B
26.31.10↔		BORP MBOR VAC VAC I VAC II VBOR
	03	D05A D05B
	04	E36A E36B
	06	G12A G16A G38A G38B
26.31.11↔		BORP MBOR VAC VAC I VAC II VBOR
	03	D05A D05B
	04	E36A E36B
	06	G12A G16A G38A G38B
26.31.99↔		BORP MBOR VAC VAC I VAC II VBOR
	03	D05A D05B
	04	E36A E36B
	06	G12A G16A G38A G38B
26.32.00↔		BORP MBOR VAC VAC I VAC II VBOR
	03	D05A D05B
	04	E36A E36B
	06	G12A G16A G38A G38B
26.32.10↔		BORP MBOR VAC VAC I VAC II VBOR
	03	D05A D05B D24A D24B
	04	E36A E36B
	06	G12A G16A G38A G38B
26.32.11↔		BORP MBOR VAC VAC I VAC II VBOR
	03	D05A D05B D24A D24B
	04	E36A E36B
	06	G12A G16A G38A G38B
26.32.20↔		BORP MBOR VAC VAC I VAC II VBOR
	03	D05A D05B D24A D24B
	04	E36A E36B
	06	G12A G16A G38A G38B
26.32.30↔		BORP MBOR VAC VAC I VAC II VBOR
	03	D05A D05B
	04	E36A E36B
	06	G12A G16A G38A G38B
26.32.99↔		BORP MBOR VAC VAC I VAC II VBOR
	03	D05A D05B
	04	E36A E36B
	06	G12A G16A G38A

CHOP	MDC	DRG
		G38B
26.41.00↔		BORP MBOR VAC VBOR
	03	D06A D06B D06C
	04	E36A E36B
	06	G12A G16A G38A G38B
	21B	X06A X06B X06C
26.41.10↔		BORP MBOR VAC VBOR
	03	D06A D06B D06C
	04	E36A E36B
	06	G12A G16A G38A G38B
	21B	X06A X06B X06C
26.41.99↔		BORP MBOR VAC VBOR
	03	D06A D06B D06C
	04	E36A E36B
	06	G12A G16A G38A G38B
	21B	X06A X06B X06C
26.42↔		BORP MBOR VAC VBOR
	03	D06A D06B D06C
	04	E36A E36B
	06	G12A G16A G38A G38B
	21B	X06A X06B X06C
26.49.00↔		BORP MBOR VAC VBOR
	03	D06A D06B D06C
	04	E36A E36B
	06	G12A G16A G38A G38B
	21B	X06A X06B X06C
26.49.10↔		BORP MBOR VAC VAC I VAC II VBOR
	03	D06A D06B D06C
	04	E36A E36B
	06	G12A G16A G38A G38B
	21B	X06A X06B X06C
26.49.11↔		BORP MBOR VAC VAC I VAC II VBOR
	03	D06A D06B D06C
	04	E36A E36B
	06	G12A G16A G38A G38B
	21B	X06A X06B X06C
26.49.12↔		BORP MBOR VAC VAC I VAC II VBOR
	03	D06A D06B D06C
	04	E36A E36B
	06	G12A G16A G38A G38B
	21B	X06A X06B X06C
26.49.99↔		BORP MBOR VAC VBOR
	03	D06A D06B D06C
	04	E36A E36B
	06	G12A G16A G38A G38B
	21B	X06A X06B X06C
26.99.00↔	03	D06A D06B D06C
26.99.10↔	03	D06A D06B D06C
26.99.20↔	03	D06A D06B D06C
26.99.21↔	03	D06A D06B D06C
26.99.22↔	03	D06A D06B D06C
26.99.23↔	03	D06A D06B D06C

CHOP	MDC	DRG
26.99.24↔	03	D06A D06B D06C
26.99.29↔	03	D06A D06B D06C
26.99.99↔	03	D06A D06B D06C
27.0‡↔	01	B60A
	03	D06A D06B D06C D40Z
27.1↔	03	D08Z D22Z D25A D25B D30A D30B D30C
	09	J02A J02B J03A J03B J04Z J11A J11B
	21B	X06A X06B X06C
27.21.10‡↔		AKBB
	01	B60A
	03	D86A
	16	Q86A
27.21.20↔	03	D08Z D22Z D25A D25B D30A D30B D30C
	09	J02A J02B J03A J03B J04Z J11A J11B
27.21.99‡↔		AKBB
	01	B60A
	03	D86A
	16	Q86A
27.22.10‡↔		AKBB
	01	B60A
	03	D86A
	16	Q86A
27.22.20↔	03	D08Z D22Z D25A D25B D30A D30B D30C
	09	J02A J02B J03A J03B J04Z J11A J11B
27.22.99‡↔		AKBB
	01	B60A
	03	D86A
	16	Q86A
27.24.20↔	03	D08Z D22Z D25A D25B D30A D30B D30C
	09	J02A J02B J03A J03B J04Z J11A J11B
27.24.99↔	03	D08Z D22Z D25A D25B D30A D30B D30C
	09	J02A J02B J03A J03B J04Z J11A J11B
27.31.00↔		BORP MBOR VAC VBOR
	03	D08Z D22Z D25A D25B D30A D30B D30C
	04	E36A E36B
	06	G12A G16A G38A G38B
27.31.10↔		BORP MBOR VAC VBOR
	03	D08Z D22Z D25A D25B D30A D30B D30C
	04	E36A E36B
	06	G12A G16A G38A G38B
27.31.20↔		BORP MBOR VAC

CHOP	MDC	DRG
		VBOR
	03	D08Z D22Z D25A D25B D30A D30B D30C
	04	E36A E36B
	06	G12A G16A G38A G38B
27.31.30↔		BORP MBOR VAC VBOR
	03	D08Z D22Z D25A D25B D30A D30B D30C
	04	E36A E36B
	06	G12A G16A G38A G38B
27.31.99↔		BORP MBOR VAC VBOR
	03	D08Z D22Z D25A D25B D30A D30B D30C
	04	E36A E36B
	06	G12A G16A G38A G38B
27.32.00↔		BORP MBOR VAC VAC I VAC II VBOR
	03	D08Z D22Z D24A D24B D24C D25A D25B D30A D30B D30C
	04	E36A E36B
	06	G12A G16A G38A G38B
	08	I17Z
	09	J02A J02B J08Z
	21B	X06A X06B X06C
27.32.10↔		BORP MBOR VAC VAC I VAC II VBOR
	03	D08Z D22Z D24A D24B D24C D25A D25B D30A D30B D30C
	04	E36A E36B
	06	G12A G16A G38A G38B
	08	I17Z
	09	J02A J02B J08Z
	21B	X06A X06B X06C
27.32.11↔		BORP MBOR VAC VAC I VAC II VBOR
	03	D08Z D22Z D24A D24B D24C D25A D25B D30A D30B D30C
	04	E36A E36B
	06	G12A G16A G38A G38B
	08	I17Z
	09	J02A J02B J08Z
	21B	X06A X06B X06C
27.32.12↔		BORP MBOR VAC VAC I VAC II VBOR
	03	D08Z D22Z D24A D24B D24C D25A D25B D30A D30B D30C
	04	E36A E36B
	06	G12A G16A G38A G38B
	08	I17Z
	09	J02A J02B J08Z
	21B	X06A X06B X06C
27.32.99↔		BORP MBOR VAC VBOR
	03	D08Z D22Z D24A D24B D24C D25A D25B D30A D30B D30C
	04	E36A E36B
	06	G12A G16A G38A G38B
	08	I17Z
	09	J02A J02B J08Z
	21B	X06A X06B X06C
27.42↔	03	D08Z D22Z D25A D25B D30A D30B D30C
	09	J02A J02B J03A J03B J04Z J11A J11B
	21B	X06A X06B X06C
27.43.00↔	03	D08Z D22Z D25A D25B D30A D30B D30C
	09	J02A J02B J03A J03B J04Z J11A J11B
	21B	X06A X06B X06C
27.43.10↔	03	D08Z D22Z D25A D25B D30A D30B D30C
	09	J02A J02B J03A J03B J04Z J11A J11B
	21B	X06A X06B X06C
27.43.99↔	03	D08Z D22Z D25A D25B D30A D30B D30C
	09	J02A J02B J03A J03B J04Z J11A J11B
	21B	X06A X06B X06C
27.44.00↔	03	D08Z D22Z D25A D25B D30A D30B D30C
	09	J02A J02B J03A J03B J04Z J11A J11B
	21B	X06A X06B X06C
27.44.11↔	03	D08Z D22Z D25A D25B D30A D30B D30C
	09	J02A J02B J03A J03B J04Z J11A J11B
	21B	X06A X06B X06C
27.44.20↔	03	D08Z D22Z D25A D25B D30A D30B D30C
	09	J02A J02B J03A J03B J04Z J11A J11B
	21B	X06A X06B X06C
	22	Y02A Y02B Y02C
27.44.99↔	03	D08Z D22Z D25A D25B D30A D30B D30C
	09	J02A J02B J03A J03B J04Z J11A J11B
	21B	X06A X06B X06C
27.49.00↔	03	D08Z D22Z D25A D25B D30A D30B D30C
	09	J02A J02B J03A J03B J04Z J11A J11B
	21B	X06A X06B X06C
27.49.10↔	03	D08Z D22Z D25A D25B D30A D30B D30C
	09	J02A J02B J03A J03B J04Z J11A J11B
	21B	X06A X06B X06C
27.49.11↔	03	D08Z D22Z D25A D25B D30A D30B D30C
	09	J02A J02B J03A J03B J04Z J11A J11B
	21B	X06A X06B X06C
27.49.99↔	03	D08Z D22Z D25A D25B D30A D30B D30C
	09	J02A J02B J03A J03B J04Z J11A J11B
	21B	X06A X06B X06C
27.54.00↔		BORP KORP MBOR MKOR VAC VAC I VAC II VBOR VKOR
	03	D08Z D22Z D25A D25B D30A D30B D30C
	04	E36A E36B
	06	G12A G16A G38A G38B
	09	J02A J02B J03A J03B J04Z J11A J11B
	21B	X06A X06B X06C
	22	Y02A Y02B Y02C
27.54.10↔		BORP KORP MBOR MKOR VAC VAC I VAC II VBOR VKOR
	03	D03A D03B D03C
	04	E36A E36B
	06	G12A G16A G38A G38B
	09	J02A J02B J03A J03B J04Z J11A J11B
	21B	X06A X06B X06C
	22	Y02A Y02B Y02C
27.54.11↔		BORP KORP MBOR MKOR VAC VAC I VAC II VBOR VKOR
	03	D03A D03B D03C
	04	E36A E36B
	06	G12A G16A G38A G38B
	09	J02A J02B J03A J03B J04Z J11A J11B
	21B	X06A X06B X06C
	22	Y02A Y02B Y02C
27.54.99↔		BORP KORP MBOR MKOR VAC VAC I VAC II VBOR VKOR
	03	D08Z D22Z D25A

PROC

PROC

CHOP	MDC	DRG
		D25B D30A D30B D30C
	04	E36A E36B
	06	G12A G16A G38A G38B
	09	J02A J02B J03A J03B J04Z J11A J11B
	21B	X06A X06B X06C
	22	Y02A Y02B Y02C
27.55.00↔		BORP MBOR VAC VAC I VAC II VBOR
	03	D08Z D22Z D25A D25B D30A D30B D30C
	04	E36A E36B
	05	F04Z F13A F13B F28A
	06	G12A G16A G38A G38B
	08	I17Z
	09	J02A J02B J03A J03B J04Z J10A J10B
	21B	X06A X06B X06C
27.55.10↔		BORP MBOR VAC VB VBOR
	03	D08Z D22Z D25A D25B D30A D30B D30C
	04	E36A E36B
	05	F04Z F13A F13B F21A F21B F21C F28A
	06	G12A G16A G38A G38B
	08	I17Z I28A I28B I28C
	09	J02A J02B J03A J03B J04Z J10A J10B
	21B	X06A X06B X06C
	22	Y02A Y02B Y02C
27.55.20↔		BORP MBOR VAC VAC I VAC II VB VBOR
	03	D08Z D22Z D25A D25B D30A D30B D30C
	04	E36A E36B
	05	F04Z F13A F13B F21A F21B F21C F28A
	06	G12A G16A G38A G38B
	08	I17Z I28A I28B I28C
	09	J02A J02B J03A J03B J04Z J10A J10B
	21B	X01A X06A X06B X06C X07A X07B
	22	Y02A Y02B Y02C
27.55.99↔		BORP MBOR VAC VAC I VAC II VBOR
	03	D08Z D22Z D25A D25B D30A D30B D30C
	04	E36A E36B
	05	F04Z F13A F13B

CHOP	MDC	DRG
		F28A
	06	G12A G16A G38A G38B
	08	I17Z
	09	J02A J02B J03A J03B J04Z J10A J10B
	21B	X01A X06A X06B X06C X07A X07B
27.56.10↔		BORP MBOR VAC VB VBOR
	01	B17A B17B
	03	D25A D25B D28Z D29Z
	04	E36A E36B
	05	F04Z F13A F13B F21A F21B F21C F28A
	06	G12A G16A G38A G38B
	08	I17Z I28A I28B I28C
	09	J02A J02B J04Z J08Z J21Z J22Z
	21B	X06A X06B X06C
	22	Y02A Y02B Y02C
27.56.20↔		BORP MBOR VAC VAC I VAC II VB VBOR
	01	B17A B17B
	03	D25A D25B D28Z D29Z
	04	E36A E36B
	05	F04Z F13A F13B F21A F21B F21C F28A
	06	G12A G16A G38A G38B
	08	I17Z I28A I28B I28C
	09	J02A J02B J04Z J08Z J21Z J22Z
	21B	X01A X01B X06A X06B X06C X07A X07B
	22	Y02A Y02B Y02C
27.56.30↔		BORP MBOR VAC VB VBOR
	01	B17A B17B
	03	D25A D25B D28Z D29Z
	04	E36A E36B
	05	F04Z F13A F13B F21A F21B F21C F28A
	06	G12A G16A G38A G38B
	08	I17Z I28A I28B I28C
	09	J02A J02B J04Z J08Z J21Z J22Z
	21B	X01A X01B X06A X06B X06C X07A X07B
	22	Y02A Y02B Y02C
27.56.40↔		BORP MBOR VAC VAC I VAC II VB VBOR
	01	B17A B17B
	03	D25A D25B D28Z

CHOP	MDC	DRG
		D29Z
	04	E36A E36B
	05	F04Z F13A F13B F21A F21B F21C F28A
	06	G12A G16A G38A G38B
	08	I17Z I28A I28B I28C
	09	J02A J02B J04Z J08Z J21Z J22Z
	21B	X01A X01B X06A X06B X06C X07A X07B
	22	Y02A Y02B Y02C
27.56.50↔		BORP MBOR VAC VB VBOR
	01	B17A B17B
	03	D25A D25B D28Z D29Z
	04	E36A E36B
	05	F04Z F13A F13B F21A F21B F21C F28A
	06	G12A G16A G38A G38B
	08	I17Z I28A I28B I28C
	09	J02A J02B J04Z J08Z J21Z J22Z
	21B	X01A X01B X06A X06B X06C X07A X07B
	22	Y02A Y02B Y02C
27.56.60↔		BORP MBOR VAC VAC I VAC II VB VBOR
	01	B17A B17B
	03	D25A D25B D28Z D29Z
	04	E36A E36B
	05	F04Z F13A F13B F21A F21B F21C F28A
	06	G12A G16A G38A G38B
	08	I17Z I28A I28B I28C
	09	J02A J02B J04Z J08Z J21Z J22Z
	21B	X01A X01B X06A X06B X06C X07A X07B
	22	Y02A Y02B Y02C
27.56.99↔		BORP MBOR VAC VB VBOR
	01	B17A B17B
	03	D25A D25B D28Z D29Z
	04	E36A E36B
	05	F04Z F13A F13B F21A F21B F21C F28A
	06	G12A G16A G38A G38B
	08	I17Z I28A I28B I28C
	09	J02A J02B J04Z J08Z J21Z J22Z
	21B	X01A X01B X06A

CHOP	MDC	DRG
		X06B X06C X07A X07B
	22	Y02A Y02B Y02C
27.57.10↔		BORP KORP MBOR MKOR VAC VAC I VAC II VB VBOR VKOR
	03	D02A D02B D24A D24B
	04	E36A E36B
	05	F04Z F13A F13B
	06	G12A G16A G38A G38B
	08	I02A I02B I02C
	09	J01A J01B J02A J02B J03A J03B J04Z J08Z J11A J11B
	12	M37Z
	21A	W01A W01B
	21B	X01A X06A X06B X06C X07A X07B
	22	Y02A Y02B
27.57.11↔		BORP KORP MBOR MKOR VAC VAC I VAC II VBOR VKOR
	03	D24A D24B D24C D25A D25B
	04	E36A E36B
	05	F04Z F13A F13B
	06	G12A G16A G38A G38B
	08	I17Z
	09	J02A J02B J03A J03B J04Z J08Z J11A J11B
	21B	X01A X01B X06A X06B X06C X07A X07B
27.57.99↔		BORP KORP MBOR MKOR VAC VAC I VAC II VBOR VKOR
	01	B17A B17B
	03	D25A D25B
	04	E36A E36B
	05	F04Z F13A F13B
	06	G12A G16A G38A G38B
	08	I17Z
	09	J02A J02B J03A J03B J04Z J08Z J11A J11B
	21B	X01A X01B X06A X06B X06C X07A X07B
27.58↔		BORP MBOR VAC VAC I VAC II VBOR
	03	D08Z D12A D12B D22Z D25A D25B D30A D30B D30C
	04	E36A E36B
	05	F04Z F13A F13B
	06	G12A G16A G38A G38B
	09	J02A J02B J03A J03B J04Z J08Z J10A J10B J11A J11B
	21B	X06A X06B X06C
	22	Y02A Y02B Y02C
27.59.20↔		BORP MBOR VAC VB VBOR
	03	D08Z D12A D12B D22Z D25A D25B D30A D30B D30C
	04	E36A E36B
	05	F04Z F13A F13B F21A F21B F21C
	06	G12A G16A G38A G38B
	08	I28A I28B I28C
	09	J02A J02B J03A J03B J04Z J08Z J10A J10B J11A J11B
	21B	X06A X06B X06C
	22	Y02A Y02B Y02C
27.59.21↔		BORP MBOR VAC VAC I VAC II VB VBOR
	03	D08Z D12A D12B D22Z D25A D25B D30A D30B D30C
	04	E36A E36B
	05	F04Z F13A F13B F21A F21B F21C
	06	G12A G16A G38A G38B
	08	I28A I28B I28C
	09	J02A J02B J03A J03B J04Z J08Z J10A J10B J11A J11B
	21B	X06A X06B X06C
	22	Y02A Y02B Y02C
27.59.30↔		BORP MBOR VAC VB VBOR
	03	D08Z D12A D12B D22Z D25A D25B D30A D30B D30C
	04	E36A E36B
	05	F04Z F13A F13B F21A F21B F21C
	06	G12A G16A G38A G38B
	08	I28A I28B I28C
	09	J02A J02B J03A J03B J04Z J08Z J10A J10B J11A J11B
	21B	X06A X06B X06C
	22	Y02A Y02B Y02C
27.59.31↔		BORP MBOR VAC VAC I VAC II VB VBOR
	03	D08Z D12A D12B D22Z D25A D25B D30A D30B D30C
	04	E36A E36B
	05	F04Z F13A F13B F21A F21B F21C
	06	G12A G16A G38A G38B
	08	I28A I28B I28C
	09	J02A J02B J03A J03B J04Z J08Z J10A J10B J11A J11B
	21B	X06A X06B X06C
	22	Y02A Y02B Y02C
27.59.40↔		BORP KORP MBOR MKOR VAC VAC I VAC II VB VBOR VKOR
	03	D02A D02B D24A D24B
	04	E36A E36B
	05	F04Z F13A F13B
	06	G12A G16A G38A G38B
	08	I02A I02B I02C
	09	J01A J01B J02A J02B J03A J03B J04Z J08Z J10A J10B J11A J11B
	12	M37Z
	21A	W01A W01B
	21B	X01A X06A X06B X06C X07A X07B
	22	Y02A Y02B
27.59.41↔		BORP MBOR VAC VAC I VAC II VB VBOR
	03	D08Z D12A D12B D22Z D25A D25B D30A D30B D30C
	04	E36A E36B
	05	F04Z F13A F13B F21A F21B F21C
	06	G12A G16A G38A G38B
	08	I28A I28B I28C
	09	J02A J02B J03A J03B J04Z J08Z J10A J10B J11A J11B
	21B	X06A X06B X06C
	22	Y02A Y02B Y02C
27.59.60↔		BORP MBOR VAC VBOR
	03	D08Z D12A D12B D22Z D25A D25B D30A D30B D30C
	04	E36A E36B
	05	F04Z F13A F13B
	06	G12A G16A G38A G38B
	09	J02A J02B J03A J03B J04Z J08Z J10A J10B J11A J11B
	21B	X06A X06B X06C
	22	Y02A Y02B Y02C
27.59.99↔		BORP MBOR VAC VB VBOR
	01	B17A B17B
	03	D08Z D12A D12B D22Z D25A D25B D30A D30B D30C
	04	E36A E36B
	05	F04Z F13A F13B F21A F21B F21C
	06	G12A G16A G38A G38B
	08	I28A I28B I28C
	09	J02A J02B J03A J03B J04Z J08Z J10A J10B J11A J11B
	21B	X06A X06B X06C

PROC

PROC

CHOP	MDC	DRG
	22	Y02A Y02B Y02C
27.61↔	03	D12A D12B
	04	E02A E02B E02C E07Z
	09	J02A J02B J03A J03B J04Z J10A J10B
	21B	X06A X06B X06C
27.62.00↔		BORP KORP MBOR MKOR VAC VAC I VAC II VBOR VKOR
	03	D03A D03B D03C D12A D12B
	04	E36A E36B
	06	G12A G16A G38A G38B
	08	I17Z
	09	J02A J02B J03A J03B J04Z J11A J11B
	21B	X06A X06B X06C
27.62.10↔		BORP KORP MBOR MKOR VAC VAC I VAC II VBOR VKOR
	03	D03A D03B D03C D12A D12B
	04	E36A E36B
	06	G12A G16A G38A G38B
	08	I17Z
	09	J02A J02B J03A J03B J04Z J11A J11B
	21B	X06A X06B X06C
27.62.11↔		BORP KORP MBOR MKOR VAC VAC I VAC II VBOR VKOR
	03	D03A D03B D03C D12A D12B
	04	E36A E36B
	06	G12A G16A G38A G38B
	08	I17Z
	09	J02A J02B J03A J03B J04Z J11A J11B
	21B	X06A X06B X06C
27.62.12↔		BORP MBOR VAC VAC I VAC II VBOR
	03	D03A D03B D03C D12A D12B
	04	E02A E02B E02C E07Z E36A E36B
	06	G12A G16A G38A G38B
	21B	X06A X06B X06C
27.62.20↔		BORP KORP MBOR MKOR VAC VAC I VAC II VBOR VKOR
	03	D03A D03B D03C D12A D12B
	04	E36A E36B
	06	G12A G16A G38A G38B
	08	I17Z
	09	J02A J02B J03A J03B J04Z J11A J11B
	21B	X06A X06B X06C
27.62.21↔		BORP MBOR VAC VAC I VAC II VBOR
	03	D03A D03B D03C D12A D12B
	04	E02A E02B E02C E07Z E36A E36B
	06	G12A G16A G38A G38B
	21B	X06A X06B X06C
27.62.22↔		BORP MBOR VAC VAC I VAC II VBOR
	03	D03A D03B D03C D12A D12B
	04	E02A E02B E02C E07Z E36A E36B
	06	G12A G16A G38A G38B
	21B	X06A X06B X06C
27.62.99↔		BORP KORP MBOR MKOR VAC VAC I VAC II VBOR VKOR
	03	D03A D03B D03C D12A D12B
	04	E36A E36B
	06	G12A G16A G38A G38B
	08	I17Z
	09	J02A J02B J03A J03B J04Z J11A J11B
	21B	X06A X06B X06C
27.63.00↔		BORP MBOR VAC VAC I VAC II VBOR
	03	D03A D03B D03C D12A D12B
	04	E36A E36B
	06	G12A G16A G38A G38B
	08	I17Z
	09	J02A J02B J03A J03B J04Z J11A J11B
	21B	X06A X06B X06C
27.63.10↔		BORP KORP MBOR MKOR VAC VAC I VAC II VBOR VKOR
	03	D03A D03B D03C D12A D12B
	04	E36A E36B
	06	G12A G16A G38A G38B
	08	I17Z
	09	J02A J02B J03A J03B J04Z J11A J11B
	21B	X06A X06B X06C
27.63.11↔		BORP KORP MBOR MKOR VAC VAC I VAC II VBOR VKOR
	03	D03A D03B D03C D12A D12B
	04	E36A E36B
	06	G12A G16A G38A G38B
	08	I17Z
	09	J02A J02B J03A J03B J04Z J11A J11B
	21B	X06A X06B X06C
27.63.20↔		BORP KORP MBOR MKOR VAC VAC I VAC II VBOR VKOR
	03	D03A D03B D03C D12A D12B
	04	E36A E36B
	06	G12A G16A G38A G38B
	08	I17Z
	09	J02A J02B J03A J03B J04Z J11A J11B
	21B	X06A X06B X06C
27.63.99↔		BORP KORP MBOR MKOR VAC VAC I VAC II VBOR VKOR
	03	D03A D03B D03C D12A D12B
	04	E36A E36B
	06	G12A G16A G38A G38B
	21B	X06A X06B X06C
27.64↔		BORP MBOR VAC VAC I VAC II VBOR
	03	D03A D03B D03C D12A D12B
	04	E36A E36B
	06	G12A G16A G38A G38B
	21B	X07A X07B
27.69.10↔		BORP MBOR VAC VBOR
	03	D03A D03B D03C D12A D12B
	04	E02A E02B E02C E07Z E36A E36B
	06	G12A G16A G38A G38B
	21B	X06A X06B X06C
27.69.11↔		BORP MBOR VAC VBOR
	03	D03A D03B D03C D12A D12B
	04	E02A E02B E02C E07Z E36A E36B
	06	G12A G16A G38A G38B
	21B	X06A X06B X06C
27.69.99↔		BORP MBOR VAC VBOR
	03	D03A D03B D03C D12A D12B
	04	E02A E02B E02C E07Z E36A E36B
	06	G12A G16A G38A G38B
	21B	X06A X06B X06C
27.71↔	03	D08Z D22Z D25A D25B D30A D30B D30C
27.72↔	03	D08Z D22Z D25A D25B D30A D30B D30C
27.73↔		BORP MBOR VAC VBOR
	03	D03A D03B D03C D12A D12B
	04	E02A E02B E02C

CHOP	MDC	DRG
		E07Z E36A E36B
	06	G12A G16A G38A G38B
	21B	X06A X06B X06C
27.79↔		BORP MBOR VAC VBOR
	03	D08Z D22Z D25A D25B D30A D30B D30C
	04	E36A E36B
	06	G12A G16A G38A G38B
27.99↔	03	D08Z D22Z D25A D25B D30A D30B D30C
	09	J02A J02B J03A J03B J04Z J11A J11B
	21B	X06A X06B X06C
28.0↔	03	D09A D09B D13A D13B D13C
28.2X.00↔		BORP MBOR VAC VBOR
	03	D09A D09B D13A D13B D13C
	04	E02A E02B E07Z E36A E36B
	06	G12A G16A G38A G38B
28.2X.10↔		BORP MBOR VAC VBOR
	03	D09A D09B D13A D13B D13C
	04	E02A E02B E07Z E36A E36B
	06	G12A G16A G38A G38B
28.2X.11↔		BORP MBOR VAC VBOR
	03	D09A D09B D13A D13B D13C
	04	E02A E02B E07Z E36A E36B
	06	G12A G16A G38A G38B
28.2X.12↔		BORP MBOR VAC VAC I VAC II VBOR
	03	D09A D09B D13A D13B D30B
	04	E02A E02B E07Z E36A E36B
	06	G12A G16A G38A G38B
28.2X.99↔		BORP MBOR VAC VBOR
	03	D09A D09B D13A D13B D13C
	04	E02A E02B E07Z E36A E36B
	06	G12A G16A G38A G38B
28.3X.00↔		BORP MBOR VAC VAC I VAC II VBOR
	03	D09A D09B D13A D13B D13C
	04	E02A E02B E02C E07Z E36A E36B
	06	G12A G16A G38A G38B
28.3X.10↔		BORP MBOR VAC VAC I VAC II VBOR
	03	D09A D09B D13A D13B D13C
	04	E02A E02B E02C E07Z E36A E36B
	06	G12A G16A G38A G38B
28.3X.11↔		BORP MBOR VAC VAC I VAC II VBOR
	03	D09A D09B D13A D13B D13C
	04	E02A E02B E02C E07Z E36A E36B
	06	G12A G16A G38A G38B
28.3X.12↔		BORP MBOR VAC VAC I VAC II VBOR
	03	D09A D09B D13A D13B D13C
	04	E02A E02B E02C E07Z E36A E36B
	06	G12A G16A G38A G38B
28.3X.99↔		BORP MBOR VAC VAC I VAC II VBOR
	03	D09A D09B D13A D13B D13C
	04	E02A E02B E02C E07Z E36A E36B
	06	G12A G16A G38A G38B
28.4↔		BORP MBOR VAC VBOR
	03	D09A D09B D13A D13B D13C
	04	E02A E02B E07Z E36A E36B
	06	G12A G16A G38A G38B
28.5X.00↔		BORP MBOR VAC VAC I VAC II VBOR
	03	D09A D09B D13A D13B D13C
	04	E36A E36B
	06	G12A G16A G38A G38B
28.5X.10↔		BORP MBOR VAC VAC I VAC II VBOR
	03	D09A D09B D13A D13B D13C
	04	E36A E36B
	06	G12A G16A G38A G38B
28.5X.11↔		BORP MBOR VAC VAC I VAC II VBOR
	03	D09A D09B D13A D13B D13C
	04	E36A E36B
	06	G12A G16A G38A G38B
28.5X.99↔		BORP MBOR VAC VAC I VAC II VBOR
	03	D09A D09B D13A D13B D13C
	04	E36A E36B
	06	G12A G16A G38A G38B
28.6↔		BORP MBOR VAC VAC I VAC II VBOR
	03	D09A D09B D13A D13B D13C
	04	E02A E02B E02C E07Z E36A E36B
	06	G12A G16A G38A G38B
28.7X.00↔	03	D09A D09B D13A D13B
	21B	X06A X06B X06C
28.7X.10↔	03	D09A D09B D13A D13B
	21B	X06A X06B X06C
28.7X.11↔	03	D09A D09B D13A D13B
	21B	X06A X06B X06C
28.7X.99↔	03	D09A D09B D13A D13B
	21B	X06A X06B X06C
28.91↔		BORP MBOR VAC VBOR
	03	D09A D09B D13A D13B D13C
	04	E36A E36B
	06	G12A G16A G38A G38B
28.92↔		BORP MBOR VAC VBOR
	03	D09A D09B D13A D13B D13C
	04	E36A E36B
	06	G12A G16A G38A G38B
	21B	X06A X06B X06C
28.99↔	03	D09A D09B D13A D13B D13C
	21B	X06A X06B X06C
29.0↔	03	D12A D12B
	21B	X06A X06B X06C
29.12.10‡↔		AKBB
	01	B60A
	03	D86A
	16	Q86A
29.12.20↔	03	D12A D12B D39Z
	09	J02A J02B J03A J03B J04Z J11A J11B
29.12.30↔	03	D12A D12B D39Z
	09	J02A J02B J03A J03B J04Z J11A J11B
29.12.99‡↔		AKBB
	01	B60A
	03	D86A
	16	Q86A
29.2X.00↔		BORP MBOR VAC VAC I VAC II VBOR
	03	D12A D12B
	04	E36A E36B
	06	G12A G16A G38A G38B
	09	J02A J02B J03A J03B J04Z J11A J11B
	21B	X06A X06B X06C
29.2X.10↔		BORP MBOR VAC VAC I VAC II VBOR
	03	D12A D12B
	04	E36A E36B
	06	G12A G16A G38A G38B
	09	J02A J02B J03A

PROC

PROC

CHOP	MDC	DRG
		J03B J04Z J11A J11B
	21B	X06A X06B X06C
29.2X.11↔		BORP MBOR VAC VAC I VAC II VBOR
	03	D12A D12B
	04	E36A E36B
	06	G12A G16A G38A G38B
	09	J02A J02B J03A J03B J04Z J11A J11B
	21B	X06A X06B X06C
29.2X.20↔		BORP MBOR VAC VAC I VAC II VBOR
	03	D12A D12B
	04	E36A E36B
	06	G12A G16A G38A G38B
	09	J02A J02B J03A J03B J04Z J11A J11B
	21B	X06A X06B X06C
29.2X.21↔		BORP MBOR VAC VAC I VAC II VBOR
	03	D12A D12B
	04	E36A E36B
	06	G12A G16A G38A G38B
	09	J02A J02B J03A J03B J04Z J11A J11B
	21B	X06A X06B X06C
29.2X.99↔		BORP MBOR VAC VAC I VAC II VBOR
	03	D12A D12B
	04	E36A E36B
	06	G12A G16A G38A G38B
	09	J02A J02B J03A J03B J04Z J11A J11B
	21B	X06A X06B X06C
29.31↔		BORP MBOR VAC VAC I VAC II VBOR
	03	D12A
	04	E36A E36B
	06	G12A G12B G16A G33Z G38A G38B G38C
	07	H33Z
	11	L33Z
29.32.00↔		BORP MBOR VAC VAC I VAC II VBOR
	03	D12A D12B
	04	E36A E36B
	06	G12A G12B G16A G33Z G38A G38B G38C
	07	H33Z
	11	L33Z
29.32.10↔		BORP MBOR VAC VAC I VAC II VBOR
	03	D12A D12B
	04	E36A E36B
	06	G12A G12B G16A G33Z G38A G38B G38C
	07	H33Z
	11	L33Z
29.32.11↔		BORP MBOR VAC VAC I VAC II VBOR
	03	D12A D12B
	04	E36A E36B
	06	G12A G12B G16A G33Z G38A G38B G38C
	07	H33Z
	11	L33Z
29.32.99↔		BORP MBOR VAC VAC I VAC II VBOR
	03	D12A D12B
	04	E36A E36B
	06	G12A G12B G16A G33Z G38A G38B G38C
	07	H33Z
	11	L33Z
29.33.00↔		BORP MBOR VAC VAC I VAC II VBOR
	03	D03A D03B D03C D12A D12B D25A D25B
	04	E02A E02B E02C E07Z E36A E36B
	06	G12A G16A G16B G18A G18B G19A G19B G33Z G38A G38B G38C
	07	H33Z
	09	J02A J02B J08Z
	11	L33Z
	21B	X06A X06B X06C
29.33.10↔		BORP KORP MBOR MKOR VAC VAC I VAC II VBOR VKOR
	03	D03A D03B D03C D12A D12B D25A D25B
	04	E02A E02B E02C E07Z E36A E36B
	06	G12A G16A G16B G18A G18B G19A G19B G33Z G38A G38B G38C
	07	H33Z
	09	J02A J02B J08Z
	11	L33Z
	21B	X06A X06B X06C
29.33.11↔		BORP KORP MBOR MKOR VAC VAC I VAC II VBOR VKOR
	03	D12A D12B D24A D24B D24C
	04	E02A E02B E02C E07Z E36A E36B
	06	G12A G16A G16B G18A G18B G19A G19B G33Z G38A G38B G38C
	07	H33Z
	09	J02A J02B J08Z
	11	L33Z
	21B	X06A X06B X06C
29.33.12↔		BORP KORP MBOR MKOR VAC VAC I VAC II VB VBOR VKOR
	03	D02A D02B D24A D24B
	04	E02A E02B E02C E07Z E36A E36B
	05	F04Z
	06	G12A G16A G16B G18A G18B G19A G19B G33Z G38A G38B G38C
	07	H33Z
	08	I02A I02B I02C
	09	J01A J01B J02A J02B J08Z
	11	L33Z
	12	M37Z
	21A	W01A W01B
	21B	X01A X06A X06B X06C X07A X07B
	22	Y02A Y02B
29.33.20↔		BORP KORP MBOR MKOR VAC VAC I VAC II VBOR VKOR
	03	D12A D12B D24A D24B D24C
	04	E02A E02B E02C E07Z E36A E36B
	06	G12A G16A G16B G18A G18B G19A G19B G33Z G38A G38B G38C
	07	H33Z
	09	J02A J02B J08Z
	11	L33Z
	21B	X06A X06B X06C
29.33.21↔		BORP KORP MBOR MKOR VAC VAC I VAC II VB VBOR VKOR
	03	D02A D02B D24A D24B
	04	E02A E02B E02C E07Z E36A E36B
	05	F04Z
	06	G12A G16A G16B G18A G18B G19A G19B G33Z G38A G38B G38C
	07	H33Z
	08	I02A I02B I02C
	09	J01A J01B J02A J02B J08Z
	11	L33Z
	12	M37Z
	21A	W01A W01B
	21B	X01A X06A X06B X06C X07A X07B
	22	Y02A Y02B
29.33.99↔		BORP KORP MBOR MKOR VAC VAC I VAC II VBOR VKOR
	03	D03A D03B D03C D12A D12B D25A D25B
	04	E02A E02B E02C E07Z E36A E36B
	06	G12A G16A G16B G18A G18B G19A G19B G33Z G38A G38B G38C
	07	H33Z
	09	J02A J02B J08Z
	11	L33Z

CHOP	MDC	DRG
	21B	X06A X06B X06C X07A X07B
29.39↔	03	D12A D12B
	06	G12A G12B
	07	H33Z
	11	L33Z
29.4X.10↔		BORP KORP MBOR MKOR VAC VAC I VAC II VBOR VKOR
	03	D03A D03B D03C D12A D12B D25A D25B
	04	E02A E02B E02C E07Z E36A E36B
	06	G12A G16A G33Z G38A G38B G38C
	07	H33Z
	09	J02A J02B J08Z
	11	L33Z
	21B	X06A X06B X06C X07A X07B
29.4X.11↔		BORP KORP MBOR MKOR VAC VAC I VAC II VBOR VKOR
	03	D03A D03B D03C D12A D12B D25A D25B
	04	E02A E02B E02C E07Z E36A E36B
	06	G12A G16A G33Z G38A G38B G38C
	07	H33Z
	09	J02A J02B J08Z
	11	L33Z
	21B	X06A X06B X06C X07A X07B
29.4X.12↔		BORP KORP MBOR MKOR VAC VAC I VAC II VB VBOR VKOR
	03	D02A D02B D03A D03B D03C D24A D24B D25A D25B
	04	E02A E02B E02C E07Z E36A E36B
	05	F04Z
	06	G12A G16A G33Z G38A G38B G38C
	07	H33Z
	08	I02A I02B I02C
	09	J01A J01B J02A J02B J08Z
	11	L33Z
	12	M37Z
	21A	W01A W01B
	21B	X01A X06A X06B X06C X07A X07B
	22	Y02A Y02B
29.4X.99↔		BORP MBOR VAC VAC I VAC II VBOR
	03	D03A D03B D03C D12A D12B D25A D25B
	04	E02A E02B E02C E07Z E36A E36B
	06	G12A G16A G38A G38B
	07	H33Z
	09	J02A J02B J08Z
	11	L33Z
	21B	X06A X06B X06C X07A X07B
29.51↔	03	D12A D12B
	21B	X06A X06B X06C
29.52↔		BORP MBOR VAC VAC I VAC II VBOR
	03	D12A D12B
	04	E36A E36B
	06	G12A G16A G38A G38B
	09	J02A J02B J03A J03B J04Z J11A J11B
	21B	X06A X06B X06C
29.53↔	03	D12A D12B
	21B	X06A X06B X06C
29.54↔	03	D12A D12B
29.59↔		BORP MBOR VAC VBOR
	03	D03A D03B D03C D12A D12B
	04	E02A E02B E02C E07Z E36A E36B
	06	G12A G16A G38A G38B
	21B	X06A X06B X06C
29.92↔	01	B17A B17B
	03	D12A D12B
	08	I02A I02B I02C I08A I08B I13A I13B I28A I28B
	21B	X06A X06B X06C
29.99↔		BORP MBOR VAC VBOR
	03	D12A D12B
	04	E36A E36B
	06	G12A G12B G16A G38A G38B
	07	H33Z
	11	L33Z
30.01↔	03	D09A D09B D30A D30B D30C
	04	E02A E02B E02C
30.09.00↔	03	D09A D09B D30A D30B D30C
	04	E02A E02B E02C
30.09.10↔	03	D09A D09B D30A D30B D30C
	04	E02A E02B E02C
30.09.11↔	03	D09A D09B D30A D30B D30C
	04	E02A E02B E02C
30.09.20↔	03	D09A D09B D30A D30B D30C
	04	E02A E02B E02C
30.09.21↔	03	D09A D09B D30A D30B D30C
	04	E02A E02B E02C
30.09.99↔	03	D09A D09B D30A D30B D30C
	04	E02A E02B E02C
30.1X.00↔		BORP MBOR VAC VAC I VAC II VBOR
	03	D25A D25B
	04	E02A E02B E02C E36A E36B
	06	G12A G16A G38A G38B
	21B	X06A X06B X06C
	22	Y02A Y02B Y02C
30.1X.10↔		BORP MBOR VAC VAC I VAC II VBOR
	03	D25A D25B
	04	E02A E02B E02C E36A E36B
	06	G12A G16A G38A G38B
	09	J02A J02B J08Z
	21B	X06A X06B X06C
30.1X.11↔		BORP MBOR VAC VAC I VAC II VBOR
	03	D25A D25B
	04	E02A E02B E02C E36A E36B
	06	G12A G16A G38A G38B
	09	J02A J02B J08Z
	21B	X06A X06B X06C
30.1X.99↔		BORP MBOR VAC VAC I VAC II VBOR
	03	D25A D25B
	04	E02A E02B E02C E36A E36B
	06	G12A G16A G38A G38B
	09	J02A J02B J08Z
	21B	X06A X06B X06C
30.21↔		BORP MBOR VAC VAC I VAC II VBOR
	03	D09A D09B D30A D30B
	04	E02A E02B E36A E36B
	06	G12A G16A G38A G38B
30.22.00↔		BORP MBOR VAC VAC I VAC II VBOR
	03	D09A D09B D12A D12B D30A D30B D30C
	04	E02A E02B E36A E36B
	06	G12A G16A G38A G38B
	21B	X06A X06B X06C
	22	Y02A Y02B Y02C
30.22.10↔		BORP MBOR VAC VAC I VAC II VBOR
	03	D09A D09B D12A D12B D30A D30B D30C
	04	E02A E02B E36A E36B
	06	G12A G16A G38A G38B
	21B	X06A X06B X06C
	22	Y02A Y02B Y02C
30.22.11↔		BORP MBOR VAC VAC I VAC II VBOR
	03	D09A D09B D12A D12B D30A D30B D30C
	04	E02A E02B E36A E36B
	06	G12A G16A G38A G38B
	21B	X06A X06B X06C
	22	Y02A Y02B Y02C
30.22.99↔		BORP MBOR VAC VAC I VAC II VBOR
	03	D09A D09B D12A

PROC

PROC

CHOP	MDC	DRG
		D12B D30A D30B D30C
	04	E02A E02B E36A E36B
	06	G12A G16A G38A G38B
	21B	X06A X06B X06C
	22	Y02A Y02B Y02C
30.29.00↔		BORP MBOR VAC VAC I VAC II VBOR
	03	D25A D25B D28Z D29Z
	04	E02A E02B E36A E36B
	06	G12A G16A G38A G38B
	09	J02A J02B J08Z
	21B	X06A X06B X06C
30.29.10↔		BORP MBOR VAC VAC I VAC II VBOR
	03	D25A D25B D28Z D29Z
	04	E02A E02B E36A E36B
	06	G12A G16A G38A G38B
	09	J02A J02B J08Z
	21B	X06A X06B X06C
30.29.11↔		BORP MBOR VAC VAC I VAC II VBOR
	03	D25A D25B D28Z D29Z
	04	E02A E02B E36A E36B
	06	G12A G16A G38A G38B
	09	J02A J02B J08Z
	21B	X06A X06B X06C
30.29.20↔		BORP MBOR VAC VAC I VAC II VBOR
	03	D25A D25B D28Z D29Z
	04	E02A E02B E36A E36B
	06	G12A G16A G38A G38B
	09	J02A J02B J08Z
	21B	X06A X06B X06C
30.29.21↔		BORP MBOR VAC VAC I VAC II VBOR
	03	D25A D25B D28Z D29Z
	04	E02A E02B E36A E36B
	06	G12A G16A G38A G38B
	09	J02A J02B J08Z
	21B	X06A X06B X06C
30.29.22↔		BORP MBOR VAC VAC I VAC II VBOR
	03	D25A D25B D28Z D29Z
	04	E02A E02B E36A E36B
	06	G12A G16A G38A G38B
	09	J02A J02B J08Z
	21B	X06A X06B X06C
30.29.30↔		BORP MBOR VAC VAC I VAC II VBOR
	03	D25A D25B D28Z D29Z
	04	E02A E02B E36A E36B
	06	G12A G16A G38A G38B
	09	J02A J02B J08Z
	21B	X06A X06B X06C
30.29.99↔		BORP MBOR VAC VAC I VAC II VBOR
	03	D25A D25B D28Z D29Z
	04	E02A E02B E36A E36B
	06	G12A G16A G38A G38B
	09	J02A J02B J08Z
	21B	X06A X06B X06C
30.3X.00↔		BORP KORP MBOR MKOR VAC VAC I VAC II VBOR VKOR
	03	D12A D12B D24A D24B D24C
	04	E02A E02B E02C E07Z E36A E36B
	06	G12A G16A G38A G38B
	09	J02A J02B J08Z
	21B	X06A X06B X06C X07A X07B
30.3X.10↔		BORP KORP MBOR MKOR VAC VAC I VAC II VBOR VKOR
	03	D12A D12B D24A D24B
	04	E02A E02B E02C E07Z E36A E36B
	06	G12A G16A G38A G38B
	09	J02A J02B J08Z
	21B	X06A X06B X06C X07A X07B
30.3X.11↔		BORP KORP MBOR MKOR VAC VAC I VAC II VBOR VKOR
	03	D12A D12B D24A D24B
	04	E02A E02B E02C E07Z E36A E36B
	06	G12A G16A G38A G38B
	09	J02A J02B J08Z
	21B	X06A X06B X06C X07A X07B
30.3X.12↔		BORP KORP MBOR MKOR VAC VAC I VAC II VBOR VKOR
	03	D12A D12B D24A D24B
	04	E02A E02B E02C E07Z E36A E36B
	06	G12A G16A G38A G38B
	09	J02A J02B J08Z
	21B	X06A X06B X06C X07A X07B
30.3X.13↔		BORP KORP MBOR MKOR VAC VAC I VAC II VBOR VKOR
	03	D12A D12B D24A D24B
	04	E02A E02B E02C E07Z E36A E36B
	06	G12A G16A G38A G38B
	09	J02A J02B J08Z
	21B	X06A X06B X06C X07A X07B
30.3X.14↔		BORP KORP MBOR MKOR VAC VAC I VAC II VBOR VKOR
	03	D12A D12B D24A D24B
	04	E02A E02B E02C E07Z E36A E36B
	06	G12A G16A G38A G38B
	09	J02A J02B J08Z
	21B	X06A X06B X06C X07A X07B
30.3X.15↔		BORP KORP MBOR MKOR VAC VAC I VAC II VB VBOR VKOR
	03	D02A D02B D24A D24B
	04	E02A E02B E02C E07Z E36A E36B
	05	F04Z
	06	G12A G16A G38A G38B
	08	I02A I02B I02C
	09	J01A J01B J02A J02B J08Z
	12	M37Z
	21A	W01A W01B
	21B	X01A X06A X06B X06C X07A X07B
	22	Y02A Y02B
30.3X.16↔		BORP KORP MBOR MKOR VAC VAC I VAC II VBOR VKOR
	03	D12A D12B D24A D24B
	04	E02A E02B E02C E07Z E36A E36B
	06	G12A G16A G38A G38B
	09	J02A J02B J08Z
	21B	X06A X06B X06C X07A X07B
30.3X.17↔		BORP KORP MBOR MKOR VAC VAC I VAC II VBOR VKOR
	03	D12A D12B D24A D24B
	04	E02A E02B E02C E07Z E36A E36B
	06	G12A G16A G38A G38B
	09	J02A J02B J08Z
	21B	X06A X06B X06C X07A X07B
30.3X.19↔		BORP KORP MBOR MKOR VAC VAC I VAC II VBOR VKOR
	03	D12A D12B D24A D24B
	04	E02A E02B E02C E07Z E36A E36B

CHOP	MDC	DRG
	06	G12A G16A G38A G38B
	09	J02A J02B J08Z
	21B	X06A X06B X06C X07A X07B
30.3X.99↔		BORP KORP MBOR MKOR VAC VAC I VAC II VBOR VKOR
	03	D12A D12B D24A D24B D24C
	04	E02A E02B E02C E07Z E36A E36B
	06	G12A G16A G38A G38B
	09	J02A J02B J08Z
	21B	X06A X06B X06C X07A X07B
30.4X.10↔		BORP KORP MBOR MKOR VAC VAC I VAC II VBOR VKOR
	03	D12A D12B D24A D24B
	04	E02A E02B E07Z E36A E36B
	06	G12A G16A G38A G38B
	09	J02A J02B J03A J03B J04Z J08Z J10A J10B
	10	K09A K09B
	21B	X06A X06B X06C X07A X07B
30.4X.11↔		BORP KORP MBOR MKOR VAC VAC I VAC II VBOR VKOR
	03	D12A D12B D24A D24B
	04	E02A E02B E07Z E36A E36B
	06	G12A G16A G38A G38B
	09	J02A J02B J03A J03B J04Z J08Z J10A J10B
	10	K09A K09B
	21B	X06A X06B X06C X07A X07B
30.4X.12↔		BORP KORP MBOR MKOR VAC VAC I VAC II VBOR VKOR
	03	D12A D12B D24A D24B
	04	E02A E02B E07Z E36A E36B
	06	G12A G16A G38A G38B
	09	J02A J02B J03A J03B J04Z J08Z J10A J10B
	10	K09A K09B
	21B	X06A X06B X06C X07A X07B
30.4X.13↔		BORP KORP MBOR MKOR VAC VAC I VAC II VBOR VKOR
	03	D12A D12B D24A D24B
	04	E02A E02B E07Z E36A E36B
	06	G12A G16A G38A G38B
	09	J02A J02B J03A J03B J04Z J08Z
	21B	X06A X06B X06C X07A X07B
30.4X.14↔		BORP KORP MBOR MKOR VAC VAC I VAC II VBOR VKOR
	03	D12A D12B D24A D24B
	04	E02A E02B E07Z E36A E36B
	06	G12A G16A G38A G38B
	09	J02A J02B J03A J03B J04Z J08Z J10A J10B
	10	K09A K09B
	21B	X06A X06B X06C X07A X07B
30.4X.15↔		BORP KORP MBOR MKOR VAC VAC I VAC II VB VBOR VKOR
	03	D02A D02B D24A D24B
	04	E02A E02B E07Z E36A E36B
	05	F04Z
	06	G12A G16A G38A G38B
	08	I02A I02B I02C
	09	J01A J01B J02A J02B J03A J03B J04Z J08Z J10A J10B
	10	K09A K09B
	12	M37Z
	21A	W01A W01B
	21B	X01A X06A X06B X06C X07A X07B
	22	Y02A Y02B
30.4X.16↔		BORP KORP MBOR MKOR VAC VAC I VAC II VBOR VKOR
	03	D12A D12B D24A D24B
	04	E02A E02B E07Z E36A E36B
	06	G12A G16A G38A G38B
	09	J02A J02B J03A J03B J04Z J08Z J10A J10B
	10	K09A K09B
	21B	X06A X06B X06C X07A X07B
30.4X.17↔		BORP KORP MBOR MKOR VAC VAC I VAC II VBOR VKOR
	03	D12A D12B D24A D24B
	04	E02A E02B E07Z E36A E36B
	06	G12A G16A G38A G38B
	09	J02A J02B J03A J03B J04Z J08Z J10A J10B
	10	K09A K09B
	21B	X06A X06B X06C X07A X07B
30.4X.19↔		BORP KORP MBOR MKOR VAC VAC I VAC II VBOR VKOR
	03	D12A D12B D24A D24B
	04	E02A E02B E07Z E36A E36B
	06	G12A G16A G38A G38B
	09	J02A J02B J03A J03B J04Z J08Z J10A J10B
	10	K09A K09B
	21B	X06A X06B X06C X07A X07B
30.4X.20↔		BORP KORP MBOR MKOR VAC VAC I VAC II VBOR VKOR
	03	D12A D12B D24A D24B
	04	E02A E02B E07Z E36A E36B
	06	G12A G16A G38A G38B
	09	J02A J02B J03A J03B J04Z J08Z J10A J10B
	10	K06A K06B K06C K09A K09B
	21B	X06A X06B X06C X07A X07B
30.4X.21↔		BORP KORP MBOR MKOR VAC VAC I VAC II VBOR VKOR
	03	D12A D12B D24A D24B
	04	E02A E02B E07Z E36A E36B
	06	G12A G16A G38A G38B
	09	J02A J02B J03A J03B J04Z J08Z J10A J10B
	10	K06A K06B K06C K09A K09B
	21B	X06A X06B X06C X07A X07B
30.4X.22↔		BORP KORP MBOR MKOR VAC VAC I VAC II VBOR VKOR
	03	D12A D12B D24A D24B
	04	E02A E02B E07Z E36A E36B
	06	G12A G16A G38A G38B
	09	J02A J02B J03A J03B J04Z J08Z J10A J10B
	10	K06A K06B K06C K09A K09B
	21B	X06A X06B X06C X07A X07B
30.4X.23↔		BORP KORP MBOR MKOR VAC VAC I VAC II VBOR VKOR

PROC

PROC

CHOP	MDC	DRG
	03	D12A D12B D24A D24B
	04	E02A E02B E07Z E36A E36B
	06	G12A G16A G38A G38B
	09	J02A J02B J03A J03B J04Z J08Z J10A J10B
	10	K06A K06B K06C K09A K09B
	21B	X06A X06B X06C X07A X07B
30.4X.24↔		BORP KORP MBOR MKOR VAC VAC I VAC II VBOR VKOR
	03	D12A D12B D24A D24B
	04	E02A E02B E07Z E36A E36B
	06	G12A G16A G38A G38B
	09	J02A J02B J03A J03B J04Z J08Z J10A J10B
	10	K06A K06B K06C K09A K09B
	21B	X06A X06B X06C X07A X07B
30.4X.25↔		BORP KORP MBOR MKOR VAC VAC I VAC II VB VBOR VKOR
	03	D02A D02B D24A D24B
	04	E02A E02B E07Z E36A E36B
	05	F04Z
	06	G12A G16A G38A G38B
	08	I02A I02B I02C
	09	J01A J01B J02A J02B J03A J03B J04Z J08Z J10A J10B
	10	K06A K06B K06C K09A K09B
	12	M37Z
	21A	W01A W01B
	21B	X01A X06A X06B X06C X07A X07B
	22	Y02A Y02B
30.4X.26↔		BORP KORP MBOR MKOR VAC VAC I VAC II VBOR VKOR
	03	D12A D12B D24A D24B
	04	E02A E02B E07Z E36A E36B
	06	G12A G16A G38A G38B
	09	J02A J02B J03A J03B J04Z J08Z J10A J10B
	10	K06A K06B K06C K09A K09B
	21B	X06A X06B X06C X07A X07B
30.4X.27↔		BORP KORP MBOR MKOR VAC VAC I VAC II VBOR VKOR
	03	D12A D12B D24A D24B
	04	E02A E02B E07Z E36A E36B
	06	G12A G16A G38A G38B
	09	J02A J02B J03A J03B J04Z J08Z J10A J10B
	10	K06A K06B K06C K09A K09B
	21B	X06A X06B X06C X07A X07B
30.4X.29↔		BORP KORP MBOR MKOR VAC VAC I VAC II VBOR VKOR
	03	D12A D12B D24A D24B
	04	E02A E02B E07Z E36A E36B
	06	G12A G16A G38A G38B
	09	J02A J02B J03A J03B J04Z J08Z J10A J10B
	10	K06A K06B K06C K09A K09B
	21B	X06A X06B X06C X07A X07B
30.4X.99↔		BORP KORP MBOR MKOR VAC VAC I VAC II VBOR VKOR
	03	D12A D12B D24A D24B D24C
	04	E02A E02B E07Z E36A E36B
	06	G12A G16A G38A G38B
	09	J02A J02B J03A J03B J04Z J08Z J10A J10B
	10	K09A K09B
	21B	X06A X06B X06C X07A X07B
31.1‡↔	Prä	A94A A94B
	01	B60A
	03	D02A D02B D15A D15B
	04	E02A E02B E02C
31.21‡↔	Prä	A94A A94B
	01	B60A
	03	D02A D02B D15A D15B
	04	E02A E02B E02C
31.29‡↔	Prä	A94A A94B
	01	B60A
	03	D02A D02B D15A D15B
	04	E02A E02B E02C
31.3↔	03	D09A D09B D30A D30B D30C
	04	E02A E02B E02C
31.43‡↔		AKBB
	01	B60A
	03	D86A
	16	Q86A
31.44‡↔		AKBB
	01	B60A
	03	D86A
	16	Q86A
31.45↔	03	D09A D09B D30A D30B
	04	E02A E02B E02C
31.51↔	03	D09A D09B D30A D30B
	04	E02A E02B E02C
31.61↔		BORP MBOR VAC VAC I VAC II VBOR
	03	D09A D09B D25A D25B D30A D30B
	04	E02A E02B E02C E36A E36B
	06	G12A G16A G38A G38B
	21B	X06A X06B X06C
	22	Y02A Y02B Y02C
31.62↔		BORP MBOR VAC VAC I VAC II VBOR
	03	D09A D09B D25A D25B D30A D30B
	04	E02A E02B E02C E36A E36B
	06	G12A G16A G38A G38B
	21B	X06A X06B X06C
	22	Y02A Y02B Y02C
31.63↔		BORP MBOR VAC VBOR
	03	D09A D09B D25A D25B D30A D30B
	04	E02A E02B E02C E36A E36B
	06	G12A G16A G38A G38B
	21B	X06A X06B X06C
	22	Y02A Y02B Y02C
31.64↔		BORP MBOR VAC VAC I VAC II VBOR
	03	D09A D09B D25A D25B D30A D30B
	04	E02A E02B E02C E36A E36B
	06	G12A G16A G38A G38B
	21B	X06A X06B X06C
	22	Y02A Y02B Y02C
31.69.12↔		BORP MBOR VAC VAC I VAC II VBOR
	03	D25A D25B D28Z D29Z
	04	E02A E02B E02C E36A E36B
	06	G12A G16A G38A G38B
	09	J02A J02B J08Z
	21B	X06A X06B X06C
31.69.14↔		BORP MBOR VAC VAC I VAC II VBOR
	03	D25A D25B D28Z D29Z
	04	E02A E02B E02C E36A E36B
	06	G12A G16A G38A G38B
	09	J02A J02B J08Z
	21B	X06A X06B X06C
31.69.20↔		BORP MBOR VAC VAC I VAC II VBOR
	03	D25A D25B D28Z

CHOP	MDC	DRG
		D29Z
	04	E02A E02B E02C E36A E36B
	06	G12A G16A G38A G38B
	09	J02A J02B J08Z
	21B	X06A X06B X06C
31.69.30↔		BORP MBOR VAC VAC I VAC II VBOR
	03	D25A D25B D28Z D29Z
	04	E02A E02B E02C E36A E36B
	06	G12A G16A G38A G38B
	09	J02A J02B J08Z
	19	U01A U01B
	21B	X06A X06B X06C
31.69.31↔		BORP MBOR VAC VAC I VAC II VBOR
	03	D25A D25B D28Z D29Z
	04	E02A E02B E02C E36A E36B
	06	G12A G16A G38A G38B
	09	J02A J02B J08Z
	21B	X06A X06B X06C
31.69.40↔		BORP MBOR VAC VAC I VAC II VBOR
	03	D25A D25B D28Z D29Z
	04	E02A E02B E02C E36A E36B
	06	G12A G16A G38A G38B
	09	J02A J02B J08Z
	21B	X06A X06B X06C
31.69.41↔		BORP MBOR VAC VBOR
	03	D25A D25B D28Z D29Z
	04	E02A E02B E02C E36A E36B
	06	G12A G16A G38A G38B
	09	J02A J02B J08Z
	19	U01A U01B
	21B	X06A X06B X06C
31.69.42↔		BORP MBOR VAC VAC I VAC II VBOR
	03	D25A D25B D28Z D29Z
	04	E02A E02B E02C E36A E36B
	06	G12A G16A G38A G38B
	09	J02A J02B J08Z
	19	U01A U01B
	21B	X06A X06B X06C
31.69.99↔		BORP MBOR VAC VBOR
	03	D25A D25B D28Z D29Z
	04	E02A E02B E02C E36A E36B
	06	G12A G16A G38A G38B
	09	J02A J02B J08Z
	19	U01A U01B

CHOP	MDC	DRG
	21B	X06A X06B X06C
31.71↔		BORP MBOR VAC VAC I VAC II VBOR
	03	D12A D12B D25A D25B
	04	E02A E02B E02C E36A E36B
	06	G12A G16A G38A G38B
	21B	X06A X06B X06C
31.72↔		BORP MBOR VAC VAC I VAC II VBOR
	03	D12A D12B
	04	E02A E02B E02C E36A E36B
	05	F21A F21B F21C
	06	G12A G12B G16A G38A G38B
	09	J02A J02B J03A J03B J04Z J11A J11B
	21B	X06A X06B X06C
	22	Y02A Y02B Y02C
31.73↔		BORP MBOR VAC VAC I VAC II VBOR
	03	D12A D12B D25A D25B
	04	E01A E01B E02A E02B E02C E06A E06B E06C E36A E36B
	06	G02A G02B G12A G16A G16B G18A G18B G19A G19B G38A G38B G38C
	07	H33Z
	11	L33Z
	21B	X06A X06B X06C
	22	Y02A Y02B Y02C
31.75↔		BORP MBOR VAC VAC I VAC II VBOR
	03	D09A D09B D24A D24B D24C D30A D30B
	04	E02A E02B E02C E36A E36B
	06	G12A G16A G38A G38B
31.79.00↔		BORP MBOR VAC VAC I VAC II VBOR
	03	D12A D12B
	04	E02A E02B E02C E36A E36B
	06	G12A G16A G38A G38B
	21B	X04Z X05Z X06A X06B X06C
31.79.10‡↔	Prä	A94A A94B
	01	B60A
	03	D02A D02B D15A D15B
	04	E02A E02B E02C
31.79.11↔		BORP MBOR VAC VAC I VAC II VBOR
	03	D12A D12B
	04	E02A E02B E02C E36A E36B
	06	G12A G16A G38A G38B
	21B	X04Z X05Z X06A

CHOP	MDC	DRG
		X06B X06C
31.79.12↔		BORP MBOR VAC VAC I VAC II VBOR
	03	D12A D12B
	04	E02A E02B E02C E36A E36B
	06	G12A G16A G38A G38B
	21B	X04Z X05Z X06A X06B X06C
31.79.13↔		BORP MBOR VAC VAC I VAC II VBOR
	03	D12A D12B
	04	E02A E02B E02C E36A E36B
	06	G12A G16A G38A G38B
	21B	X04Z X05Z X06A X06B X06C
31.79.14↔		BORP MBOR VAC VAC I VAC II VBOR
	03	D12A D12B
	04	E02A E02B E02C E36A E36B
	06	G12A G16A G38A G38B
	21B	X04Z X05Z X06A X06B X06C
31.79.15↔		BORP MBOR VAC VAC I VAC II VBOR
	03	D12A D12B
	04	E02A E02B E02C E36A E36B
	06	G12A G16A G38A G38B
	21B	X04Z X05Z X06A X06B X06C
31.79.99↔	03	D12A D12B
	04	E02A E02B E02C
	21B	X04Z X05Z X06A X06B X06C
31.91↔	01	B17A B17B
	03	D12A D12B
	08	I02A I02B I02C I08A I08B I13A I13B I28A I28B
	21B	X06A X06B X06C
31.92↔	03	D09A D09B D30A D30B D30C
	04	E02A E02B E02C
	21B	X06A X06B X06C
	22	Y02A Y02B Y02C
31.96↔	03	D12A D12B
	04	E02A E02B E02C
	21B	X06A X06B X06C
31.97↔	03	D12A D12B
	04	E02A E02B E02C
	21B	X06A X06B X06C
31.98↔	03	D09A D09B D30A D30B D30C
	04	E02A E02B E02C
	21B	X06A X06B X06C
	22	Y02A Y02B Y02C
31.99.00↔	03	D12A D12B
	04	E02A E02B E02C
	21B	X06A X06B X06C
31.99.99↔	03	D12A D12B
	04	E02A E02B E02C
	21B	X06A X06B X06C
32.01.10‡↔	01	B60A

PROC

CHOP	MDC	DRG
	04	E64A E65B E71B E75A E86A
32.01.11‡↔	01	B60A
	04	E64A E65B E71B E75A E86A
32.01.12‡↔	01	B60A
	04	E64A E65B E71B E75A E86A
32.01.13‡↔	01	B60A
	04	E64A E65B E71B E75A E86A
32.01.99‡↔	01	B60A
	04	E64A E65B E71B E75A E86A
32.09.10↔		BORP MBOR VAC VAC I VAC II VBOR
	04	E01A E01B E06A E06B E06C E36A E36B
	06	G12A G16A G33Z G38A G38B G38C
	07	H33Z
	08	I28A I28B
	09	J01A J01B
	11	L33Z
	21B	X06A X06B X06C
	22	Y02A Y02B Y02C
32.09.20↔		BORP MBOR VAC VAC I VAC II VBOR
	04	E01A E01B E06A E06B E06C E36A E36B
	06	G12A G16A G33Z G38A G38B G38C
	07	H33Z
	08	I28A I28B
	09	J01A J01B
	11	L33Z
	21B	X06A X06B X06C
	22	Y02A Y02B Y02C
32.09.99‡↔	01	B60A
	04	E71B
32.1X.10↔		BORP MBOR VAC VAC I VAC II VBOR
	04	E01A E01B E05A E05B E05C E36A E36B
	06	G12A G16A G33Z G38A G38B G38C
	07	H33Z
	11	L33Z
	21B	X06A X06B X06C X07A X07B
	22	Y02A Y02B Y02C
32.1X.20↔		BORP MBOR VAC VAC I VAC II VBOR
	04	E01A E01B E05A E05B E05C E36A E36B
	06	G12A G16A G33Z G38A G38B G38C
	07	H33Z
	11	L33Z
	21B	X06A X06B X06C X07A X07B
	22	Y02A Y02B Y02C
32.21↔		BORP MBOR VAC VAC I VAC II VBOR
	04	E01A E01B E06A E06B E06C E36A E36B
	06	G12A G16A G33Z G38A G38B G38C
	07	H33Z
	11	L33Z
	21B	X07A X07B
32.22↔		BORP MBOR VAC VAC I VAC II VBOR
	04	E01A E01B E06A E36A E36B
	06	G12A G16A G33Z G38A G38B G38C
	07	H33Z
	11	L33Z
	21B	X07A X07B
32.2A.09‡↔	01	B60A
	04	E71B
32.2A.11↔		BORP MBOR VAC VAC I VAC II VBOR
	04	E01A E01B E06A E06B E06C E36A E36B
	06	G12A G16A G33Z G38A G38B G38C
	07	H33Z
	08	I28A I28B
	09	J01A J01B
	11	L33Z
	21B	X06A X06B X06C
	22	Y02A Y02B Y02C
32.2A.12↔		BORP MBOR VAC VAC I VAC II VBOR
	04	E01A E01B E06A E06B E06C E36A E36B
	06	G12A G16A G33Z G38A G38B G38C
	07	H33Z
	08	I28A I28B
	09	J01A J01B
	11	L33Z
	21B	X06A X06B X06C
	22	Y02A Y02B Y02C
32.2A.13‡↔	01	B60A
	04	E71B
32.2A.14‡↔	01	B60A
	04	E71B
32.31.11↔		BORP KORP MBOR MKOR MVE VAC VAC I VAC II VBOR VKOR
	04	E01A E01B E06A E06B E06C E36A E36B
	06	G12A G16A G33Z G38A G38B G38C
	07	H33Z
	09	J01A J01B
	11	L33Z
	21B	X06A X06B X06C X07A X07B
	22	Y02A Y02B Y02C
32.31.12↔		BORP KORP MBOR MKOR MVE VAC VAC I VAC II VBOR VKOR
	04	E01A E01B E06A E06B E06C E36A E36B
	06	G12A G16A G33Z G38A G38B G38C
	07	H33Z
	09	J01A J01B
	11	L33Z
	21B	X06A X06B X06C X07A X07B
	22	Y02A Y02B Y02C
32.31.13↔		BORP KORP MBOR MKOR MVE VAC VAC I VAC II VBOR VKOR
	04	E01A E01B E06A E06B E06C E36A E36B
	06	G12A G16A G33Z G38A G38B G38C
	07	H33Z
	09	J01A J01B
	11	L33Z
	21B	X06A X06B X06C X07A X07B
	22	Y02A Y02B Y02C
32.31.14↔		BORP KORP MBOR MKOR MVE VAC VAC I VAC II VBOR VKOR
	04	E01A E01B E06A E06B E06C E36A E36B
	06	G12A G16A G33Z G38A G38B G38C
	07	H33Z
	09	J01A J01B
	11	L33Z
	21B	X06A X06B X06C X07A X07B
	22	Y02A Y02B Y02C
32.32.11↔		BORP KORP MBOR MKOR MVE VAC VAC I VAC II VBOR VKOR
	04	E01A E01B E06A E06B E06C E36A E36B
	06	G12A G16A G33Z G38A G38B G38C
	07	H33Z
	09	J01A J01B
	11	L33Z
	21B	X06A X06B X06C X07A X07B
	22	Y02A Y02B Y02C
32.32.12↔		BORP KORP MBOR MKOR MVE VAC VAC I VAC II VBOR VKOR
	04	E01A E01B E06A E06B E06C E36A E36B
	06	G12A G16A G33Z G38A G38B G38C
	07	H33Z
	09	J01A J01B
	11	L33Z
	21B	X06A X06B X06C X07A X07B
	22	Y02A Y02B Y02C
32.32.13↔		BORP KORP MBOR MKOR MVE VAC VAC I VAC II VBOR

CHOP	MDC	DRG
		VKOR
	04	E01A E01B E06A E06B E06C E36A E36B
	06	G12A G16A G33Z G38A G38B G38C
	07	H33Z
	09	J01A J01B
	11	L33Z
	21B	X06A X06B X06C X07A X07B
	22	Y02A Y02B Y02C
32.32.14↔		BORP KORP MBOR MKOR MVE VAC VAC I VAC II VBOR VKOR
	04	E01A E01B E06A E06B E06C E36A E36B
	06	G12A G16A G33Z G38A G38B G38C
	07	H33Z
	09	J01A J01B
	11	L33Z
	21B	X06A X06B X06C X07A X07B
	22	Y02A Y02B Y02C
32.39↔		BORP KORP MBOR MKOR MVE VAC VAC I VAC II VBOR VKOR
	04	E01A E01B E06A E06B E06C E36A E36B
	06	G12A G16A G33Z G38A G38B G38C
	07	H33Z
	09	J01A J01B
	11	L33Z
	21B	X06A X06B X06C X07A X07B
	22	Y02A Y02B Y02C
32.40↔		BORP KORP MBOR MKOR VAC VAC I VAC II VBOR VKOR
	04	E01A E01B E05A E05B E05C E36A E36B
	06	G12A G16A G33Z G38A G38B G38C
	07	H33Z
	09	J01A J01B
	11	L33Z
	21B	X06A X06B X06C X07A X07B
	22	Y02A Y02B Y02C
32.41.15↔		BORP KORP MBOR MKOR MVE VAC VAC I VAC II VBOR VKOR
	04	E01A E01B E05A E05B E05C E36A E36B
	06	G02A G02B G12A G16A G33Z G38A G38B G38C
	07	H33Z
	09	J01A J01B
	11	L33Z
	21B	X06A X06B X06C X07A X07B
	22	Y02A Y02B Y02C
32.41.16↔		BORP KORP MBOR MKOR MVE VAC VAC I VAC II VBOR VKOR
	04	E01A E01B E36A E36B
	06	G02A G02B G12A G16A G33Z G38A G38B G38C
	07	H33Z
	09	J01A J01B
	11	L33Z
	21B	X06A X06B X06C X07A X07B
	22	Y02A Y02B Y02C
32.41.17↔		BORP KORP MBOR MKOR MVE VAC VAC I VAC II VBOR VKOR
	04	E01A E01B E05A E05B E05C E36A E36B
	06	G02A G02B G12A G16A G33Z G38A G38B G38C
	07	H33Z
	09	J01A J01B
	11	L33Z
	21B	X06A X06B X06C X07A X07B
	22	Y02A Y02B Y02C
32.41.18↔		BORP KORP MBOR MKOR MVE VAC VAC I VAC II VBOR VKOR
	04	E01A E01B E36A E36B
	06	G02A G02B G12A G16A G33Z G38A G38B G38C
	07	H33Z
	09	J01A J01B
	11	L33Z
	21B	X06A X06B X06C X07A X07B
	22	Y02A Y02B Y02C
32.42.15↔		BORP KORP MBOR MKOR MVE VAC VAC I VAC II VBOR VKOR
	04	E01A E01B E05A E05B E05C E36A E36B
	06	G02A G02B G12A G16A G33Z G38A G38B G38C
	07	H33Z
	09	J01A J01B
	11	L33Z
	21B	X06A X06B X06C X07A X07B
	22	Y02A Y02B Y02C
32.42.16↔		BORP KORP MBOR MKOR MVE VAC VAC I VAC II VBOR VKOR
	04	E01A E01B E36A E36B
	06	G02A G02B G12A G16A G33Z G38A G38B G38C
	07	H33Z
	09	J01A J01B
	11	L33Z
	21B	X06A X06B X06C X07A X07B
	22	Y02A Y02B Y02C
32.42.17↔		BORP KORP MBOR MKOR MVE VAC VAC I VAC II VBOR VKOR
	04	E01A E01B E05A E05B E05C E36A E36B
	06	G02A G02B G12A G16A G33Z G38A G38B G38C
	07	H33Z
	09	J01A J01B
	11	L33Z
	21B	X06A X06B X06C X07A X07B
	22	Y02A Y02B Y02C
32.42.18↔		BORP KORP MBOR MKOR MVE VAC VAC I VAC II VBOR VKOR
	04	E01A E01B E36A E36B
	06	G02A G02B G12A G16A G33Z G38A G38B G38C
	07	H33Z
	09	J01A J01B
	11	L33Z
	21B	X06A X06B X06C X07A X07B
	22	Y02A Y02B Y02C
32.43.11↔		BORP KORP MBOR MKOR MVE VAC VAC I VAC II VBOR VKOR
	04	E01A E01B E05A E05B E05C E36A E36B
	06	G12A G16A G33Z G38A G38B G38C
	07	H33Z
	09	J01A J01B
	11	L33Z
	21B	X06A X06B X06C X07A X07B
	22	Y02A Y02B Y02C
32.43.12↔		BORP KORP MBOR MKOR MVE VAC VAC I VAC II VBOR VKOR
	04	E01A E01B E36A E36B
	06	G12A G16A G33Z G38A G38B G38C
	07	H33Z
	09	J01A J01B
	11	L33Z
	21B	X06A X06B X06C X07A X07B
	22	Y02A Y02B Y02C
32.43.13↔		BORP KORP MBOR

PROC

CHOP	MDC	DRG
		MKOR MVE VAC VAC I VAC II VBOR VKOR
	04	E01A E01B E05A E05B E05C E36A E36B
	06	G12A G16A G33Z G38A G38B G38C
	07	H33Z
	09	J01A J01B
	11	L33Z
	21B	X06A X06B X06C X07A X07B
	22	Y02A Y02B Y02C BORP KORP MBOR MKOR MVE VAC VAC I VAC II VBOR VKOR
32.43.14↔		
	04	E01A E01B E36A E36B
	06	G12A G16A G33Z G38A G38B G38C
	07	H33Z
	09	J01A J01B
	11	L33Z
	21B	X06A X06B X06C X07A X07B
	22	Y02A Y02B Y02C BORP KORP MBOR MKOR MVE VAC VAC I VAC II VBOR VKOR
32.43.21↔		
	04	E01A E01B E05A E05B E05C E36A E36B
	06	G12A G16A G33Z G38A G38B G38C
	07	H33Z
	09	J01A J01B
	11	L33Z
	21B	X06A X06B X06C X07A X07B
	22	Y02A Y02B Y02C BORP KORP MBOR MKOR MVE VAC VAC I VAC II VBOR VKOR
32.43.22↔		
	04	E01A E01B E36A E36B
	06	G12A G16A G33Z G38A G38B G38C
	07	H33Z
	09	J01A J01B
	11	L33Z
	21B	X06A X06B X06C X07A X07B
	22	Y02A Y02B Y02C BORP KORP MBOR MKOR MVE VAC VAC I VAC II VBOR VKOR
32.43.23↔		
	04	E01A E01B E05A E05B E05C E36A E36B
	06	G12A G16A G33Z G38A G38B G38C
	07	H33Z
	09	J01A J01B
	11	L33Z
	21B	X06A X06B X06C X07A X07B
	22	Y02A Y02B Y02C BORP KORP MBOR MKOR MVE VAC VAC I VAC II VBOR VKOR
32.43.24↔		
	04	E01A E01B E36A E36B
	06	G12A G16A G33Z G38A G38B G38C
	07	H33Z
	09	J01A J01B
	11	L33Z
	21B	X06A X06B X06C X07A X07B
	22	Y02A Y02B Y02C BORP KORP MBOR MKOR MVE VAC VAC I VAC II VBOR VKOR
32.44.11↔		
	04	E01A E01B E05A E05B E05C E36A E36B
	06	G12A G16A G33Z G38A G38B G38C
	07	H33Z
	09	J01A J01B
	11	L33Z
	21B	X06A X06B X06C X07A X07B
	22	Y02A Y02B Y02C BORP KORP MBOR MKOR MVE VAC VAC I VAC II VBOR VKOR
32.44.12↔		
	04	E01A E01B E36A E36B
	06	G12A G16A G33Z G38A G38B G38C
	07	H33Z
	09	J01A J01B
	11	L33Z
	21B	X06A X06B X06C X07A X07B
	22	Y02A Y02B Y02C BORP KORP MBOR MKOR MVE VAC VAC I VAC II VBOR VKOR
32.44.13↔		
	04	E01A E01B E05A E05B E05C E36A E36B
	06	G12A G16A G33Z G38A G38B G38C
	07	H33Z
	09	J01A J01B
	11	L33Z
	21B	X06A X06B X06C X07A X07B
	22	Y02A Y02B Y02C BORP KORP MBOR MKOR MVE VAC VAC I VAC II VBOR VKOR
32.44.14↔		
	04	E01A E01B E36A E36B
	06	G12A G16A G33Z G38A G38B G38C
	07	H33Z
	09	J01A J01B
	11	L33Z
	21B	X06A X06B X06C X07A X07B
	22	Y02A Y02B Y02C BORP KORP MBOR MKOR MVE VAC VAC I VAC II VBOR VKOR
32.44.21↔		
	04	E01A E01B E05A E05B E05C E36A E36B
	06	G12A G16A G33Z G38A G38B G38C
	07	H33Z
	09	J01A J01B
	11	L33Z
	21B	X06A X06B X06C X07A X07B
	22	Y02A Y02B Y02C BORP KORP MBOR MKOR MVE VAC VAC I VAC II VBOR VKOR
32.44.22↔		
	04	E01A E01B E36A E36B
	06	G12A G16A G33Z G38A G38B G38C
	07	H33Z
	09	J01A J01B
	11	L33Z
	21B	X06A X06B X06C X07A X07B
	22	Y02A Y02B Y02C BORP KORP MBOR MKOR MVE VAC VAC I VAC II VBOR VKOR
32.44.23↔		
	04	E01A E01B E05A E05B E05C E36A E36B
	06	G12A G16A G33Z G38A G38B G38C
	07	H33Z
	09	J01A J01B
	11	L33Z
	21B	X06A X06B X06C X07A X07B
	22	Y02A Y02B Y02C BORP KORP MBOR MKOR MVE VAC VAC I VAC II VBOR VKOR
32.44.24↔		
	04	E01A E01B E36A E36B
	06	G12A G16A G33Z G38A G38B G38C
	07	H33Z
	09	J01A J01B
	11	L33Z
	21B	X06A X06B X06C X07A X07B
	22	Y02A Y02B Y02C BORP KORP MBOR MKOR MVE VAC VAC I VAC II VBOR VKOR
32.49↔		
	04	E01A E01B E05A E05B E05C E36A E36B
	06	G12A G16A G33Z

CHOP	MDC	DRG
		G38A G38B G38C
	07	H33Z
	09	J01A J01B
	11	L33Z
	21B	X06A X06B X06C X07A X07B
	22	Y02A Y02B Y02C
32.50.11↔		BORP KORP MBOR MKOR MVE VAC VAC I VAC II VBOR VKOR
	04	E01A E01B E05A E05B E05C E36A E36B
	06	G12A G16A G33Z G38A G38B G38C
	07	H33Z
	11	L33Z
	21B	X06A X06B X06C X07A X07B
	22	Y02A Y02B Y02C
32.50.12↔		BORP KORP MBOR MKOR MVE VAC VAC I VAC II VBOR VKOR
	04	E01A E01B E36A E36B
	06	G12A G16A G33Z G38A G38B G38C
	07	H33Z
	11	L33Z
	21B	X06A X06B X06C X07A X07B
	22	Y02A Y02B Y02C
32.50.13↔		BORP KORP MBOR MKOR MVE VAC VAC I VAC II VBOR VKOR
	04	E01A E01B E05A E05B E05C E36A E36B
	06	G12A G16A G33Z G38A G38B G38C
	07	H33Z
	11	L33Z
	21B	X06A X06B X06C X07A X07B
	22	Y02A Y02B Y02C
32.50.14↔		BORP KORP MBOR MKOR MVE VAC VAC I VAC II VBOR VKOR
	04	E01A E01B E36A E36B
	06	G12A G16A G33Z G38A G38B G38C
	07	H33Z
	11	L33Z
	21B	X06A X06B X06C X07A X07B
	22	Y02A Y02B Y02C
32.51.15↔		BORP KORP MBOR MKOR MVE VAC VAC I VAC II VBOR VKOR
	04	E01A E01B E05A E05B E05C E36A E36B
	06	G12A G16A G33Z G38A G38B G38C
	07	H33Z
	11	L33Z
	21B	X06A X06B X06C
32.51.16↔	22	Y02A Y02B Y02C BORP KORP MBOR MKOR MVE VAC VAC I VAC II VBOR VKOR
	04	E01A E01B E36A E36B
	06	G12A G16A G33Z G38A G38B G38C
	07	H33Z
	11	L33Z
	21B	X06A X06B X06C X07A X07B
	22	Y02A Y02B Y02C
32.51.17↔		BORP KORP MBOR MKOR MVE VAC VAC I VAC II VBOR VKOR
	04	E01A E01B E05A E05B E05C E36A E36B
	06	G12A G16A G33Z G38A G38B G38C
	07	H33Z
	11	L33Z
	21B	X06A X06B X06C X07A X07B
	22	Y02A Y02B Y02C
32.51.18↔		BORP KORP MBOR MKOR MVE VAC VAC I VAC II VBOR VKOR
	04	E01A E01B E36A E36B
	06	G12A G16A G33Z G38A G38B G38C
	07	H33Z
	11	L33Z
	21B	X06A X06B X06C X07A X07B
	22	Y02A Y02B Y02C
32.52.11↔		BORP KORP MBOR MKOR MVE VAC VAC I VAC II VBOR VKOR
	04	E01A E01B E05A E05B E05C E36A E36B
	06	G12A G16A G33Z G38A G38B G38C
	07	H33Z
	11	L33Z
	21B	X06A X06B X06C X07A X07B
	22	Y02A Y02B Y02C
32.52.12↔		BORP KORP MBOR MKOR MVE VAC VAC I VAC II VBOR VKOR
	04	E01A E01B E36A E36B
	06	G12A G16A G33Z G38A G38B G38C
	07	H33Z
	11	L33Z
	21B	X06A X06B X06C X07A X07B
	22	Y02A Y02B Y02C
32.52.13↔		BORP KORP MBOR MKOR MVE VAC VAC I VAC II VBOR VKOR
	04	E01A E01B E05A E05B E05C E36A E36B
	06	G12A G16A G33Z G38A G38B G38C
	07	H33Z
	11	L33Z
	21B	X06A X06B X06C X07A X07B
	22	Y02A Y02B Y02C
32.52.14↔		BORP KORP MBOR MKOR MVE VAC VAC I VAC II VBOR VKOR
	04	E01A E01B E36A E36B
	06	G12A G16A G33Z G38A G38B G38C
	07	H33Z
	11	L33Z
	21B	X06A X06B X06C X07A X07B
	22	Y02A Y02B Y02C
32.59↔		BORP KORP MBOR MKOR MVE VAC VAC I VAC II VBOR VKOR
	04	E01A E01B E05A E05B E05C E36A E36B
	06	G12A G16A G33Z G38A G38B G38C
	07	H33Z
	11	L33Z
	21B	X06A X06B X06C X07A X07B
	22	Y02A Y02B Y02C
32.6↔		BORP MBOR MVE VAC VAC I VAC II VBOR
	04	E01A E01B E36A E36B
	06	G12A G16A G33Z G38A G38B G38C
	07	H33Z
	09	J01A J01B
	11	L33Z
	21B	X06A X06B X06C X07A X07B
	22	Y02A Y02B Y02C
33.20↔		BORP MBOR VAC VAC I VAC II VBOR
	04	E01A E01B E06A E06B E06C E36A E36B
	06	G12A G16A G33Z G38A G38B G38C
	07	H33Z
	11	L33Z
	21B	X06A X06B X06C
33.22‡↔	01	B60A
	04	E64A E65B E75A E86A
33.23.11‡↔	01	B60A

PROC

PROC

CHOP	MDC	DRG
	04	E64A E65B E75A E86A
33.23.13‡↔	01	B60A
	04	E64A E65B E75A E86A
33.23.14‡↔	01	B60A
	04	E64A E65B E75A E86A
33.23.99‡↔	01	B60A
	04	E64A E65B E75A E86A
33.24.10‡↔		AKBB
	01	B60A
	04	E64A E65B E71A E71B E75A E77A E86A
	16	Q86A
33.24.11‡↔		AKBB
	01	B60A
	04	E64A E65B E71A E71B E75A E77A E86A
	16	Q86A
33.24.12‡↔		AKBB
	01	B60A
	04	E64A E65B E71A E71B E75A E77A E86A
	16	Q86A
33.24.13‡↔		AKBB
	01	B60A
	04	E64A E65B E71A E71B E75A E77A E86A
	16	Q86A
33.24.14‡↔		AKBB
	01	B60A
	04	E64A E65B E71A E71B E75A E77A E86A
	16	Q86A
33.24.16‡↔		AKBB
	01	B60A
	04	E64A E65B E71A E71B E75A E77A E86A
	16	Q86A
33.24.99‡↔		AKBB
	01	B60A
	04	E64A E65B E75A E86A
	16	Q86A
33.25↔		BORP MBOR VAC VAC I VAC II VBOR
	04	E01A E01B E06A E06B E06C E36A E36B
	06	G12A G16A G38A G38B
	21B	X06A X06B X06C
	22	Y02A Y02B Y02C
33.26.11‡↔		AKBB
	01	B60A
	04	E86B
	16	Q86A
33.26.12‡↔		AKBB
	01	B60A
	04	E86B
	16	Q86A
33.26.13‡↔		AKBB
	01	B60A
	04	E86B
	16	Q86A
33.26.99‡↔		AKBB
	01	B60A
	04	E86B
	16	Q86A
33.27‡↔		AKBB
	01	B60A
	04	E64A E65B E75A E86A
	16	Q86A
33.28↔		BORP MBOR VAC VAC I VAC II VBOR
	04	E01A E01B E06A E06B E06C E36A E36B
	06	G12A G16A G38A G38B
	11	L09A L09B
33.31↔		BORP MBOR VAC VAC I VAC II VBOR
	01	B17A B17B
	04	E36A E36B
	06	G12A G16A G38A G38B
	08	I02A I02B I02C I08A I08B I13A I13B
33.33↔		BORP MBOR VAC VAC I VAC II VBOR
	04	E36A E36B
	06	G12A G12B G16A G38A G38B
	07	H06Z
	09	J02A J02B J03A J03B J04Z J11A J11B
	10	K09A K09B
	21B	X06A X06B
33.34.10↔	04	E01A E01B E06A E06B E06C
	06	G02A G02B G33Z G38A G38B G38C
	07	H33Z
	08	I10A I10B I10C
	09	J01A J01B
	11	L33Z
	21A	W01A W01B W01C
33.34.20↔		BORP KORP MBOR MKOR VAC VAC I VAC II VBOR VKOR
	04	E01A E01B E06A E06B E06C E36A E36B
	06	G02A G02B G12A G16A G33Z G38A G38B G38C
	07	H33Z
	08	I10A I10B I10C
	09	J01A J01B
	11	L33Z
	21A	W01A W01B W01C
33.34.99↔	04	E01A E01B E06A E06B E06C
	06	G02A G02B G38A G38B G38C
	07	H33Z
	08	I10A I10B I10C
	09	J01A J01B
	11	L33Z
	21A	W01A W01B W01C
33.39↔	04	E01A E01B E06A E06B E06C
	06	G02A G02B G33Z G38A G38B G38C
	07	H33Z
	11	L33Z
33.41↔		BORP MBOR VAC VAC I VAC II VBOR
	04	E01A E01B E06A E06B E06C E36A E36B
	06	G12A G16A G33Z G38A G38B G38C
	07	H33Z
	11	L33Z
	21B	X06A X06B X06C
	22	Y02A Y02B Y02C
33.42↔		BORP MBOR VAC VAC I VAC II VBOR
	04	E01A E01B E05A E05B E05C E36A E36B
	06	G12A G16A G33Z G38A G38B G38C
	07	H33Z
	09	J02A J02B J03A J03B J04Z J11A J11B
	11	L33Z
	21B	X06A X06B X06C
	22	Y02A Y02B Y02C
33.43↔		BORP MBOR VAC VAC I VAC II VBOR
	04	E01A E01B E05A E05B E05C E36A E36B
	06	G12A G16A G33Z G38A G38B G38C
	07	H33Z
	11	L33Z
	21B	X06A X06B X06C
	22	Y02A Y02B Y02C
33.50↔		BORP KORP MBOR MKOR VAC VAC I VAC II VBOR VKOR
	04	E36A E36B
	06	G12A G16A G38A G38B
	Prä	A05Z A06A A06B A06C A07A A07B A07C
33.51↔		BORP KORP MBOR MKOR VAC VAC I VAC II VBOR VKOR
	04	E36A E36B
	06	G12A G16A G38A G38B
	Prä	A05Z A06A A06B A06C A07A A07B A07C
33.52↔		BORP KORP MBOR MKOR VAC VAC I VAC II VBOR VKOR
	04	E36A E36B
	06	G12A G16A G38A G38B
	Prä	A05Z A06A A06B A06C A07A A07B

CHOP	MDC	DRG
		A07C
33.53↔		BORP KORP MBOR
		MKOR VAC VAC I
		VAC II VBOR VKOR
	04	E36A E36B
	06	G12A G16A G38A
		G38B
	Prä	A05Z A06A A06B
		A06C A07A A07B
		A07C
33.6X.00↔		BORP KORP MBOR
		MKOR VAC VAC I
		VAC II VBOR VKOR
	04	E36A E36B
	06	G12A G16A G38A
		G38B
	Prä	A05Z A06A A06B
		A06C A07A A07B
		A07C
33.6X.10↔		BORP KORP MBOR
		MKOR VAC VAC I
		VAC II VBOR VKOR
	04	E36A E36B
	06	G12A G16A G38A
		G38B
	Prä	A05Z A06A A06B
		A06C A07A A07B
		A07C
33.6X.99↔		BORP KORP MBOR
		MKOR VAC VAC I
		VAC II VBOR VKOR
	04	E36A E36B
	06	G12A G16A G38A
		G38B
	Prä	A05Z A06A A06B
		A06C A07A A07B
		A07C
33.71.11‡↔	01	B60A
	04	E02A E02B
33.71.12‡↔	01	B60A
	04	E02A E02B
33.71.13‡↔	01	B60A
	04	E02A E02B
33.71.14‡↔	01	B60A
	04	E02A E02B
33.71.16‡↔	01	B60A
	04	E02A E02B
33.71.17‡↔	01	B60A
	04	E02A E02B
33.71.18‡↔	01	B60A
	04	E02A E02B
33.71.1A‡↔	01	B60A
	04	E02A E02B
33.71.1B‡↔	01	B60A
	04	E02A E02B
33.71.1C‡↔	01	B60A
	04	E02A E02B
33.71.21‡↔	01	B60A
	04	E02A E02B
33.71.22‡↔	01	B60A
	04	E02A E02B
33.71.23‡↔	01	B60A
	04	E02A E02B
33.71.24‡↔	01	B60A
	04	E02A E02B
33.71.26‡↔	01	B60A
	04	E02A E02B
33.71.27‡↔	01	B60A
	04	E02A E02B
33.71.28‡↔	01	B60A

CHOP	MDC	DRG
	04	E02A E02B
33.71.2A‡↔	01	B60A
	04	E02A E02B
33.71.2B‡↔	01	B60A
	04	E02A E02B
33.71.2C‡↔	01	B60A
	04	E02A E02B
33.72.11‡↔	01	B60A
	04	E65A
33.72.12‡↔	01	B60A
	04	E65A
33.72.13‡↔	01	B60A
	04	E65A
33.72.14‡↔	01	B60A
	04	E65A
33.72.15‡↔	01	B60A
	04	E65A
33.72.16‡↔	01	B60A
	04	E65A
33.72.17‡↔	01	B60A
	04	E65A
33.72.18‡↔	01	B60A
	04	E65A
33.72.1A‡↔	01	B60A
	04	E65A
33.91.20‡↔	01	B60A
	04	E02A E02B
33.91.21‡↔	01	B60A
	04	E02A E02B
33.91.22‡↔	01	B60A
	04	E02A E02B
33.91.23‡↔	01	B60A
	04	E02A E02B
33.91.29‡↔	01	B60A
	04	E02A E02B
33.92↔		BORP MBOR VAC
		VAC I VAC II VBOR
	04	E01A E01B E06A
		E06B E06C E36A
		E36B
	06	G12A G16A G33Z
		G38A G38B G38C
	07	H33Z
	11	L33Z
	21B	X06A X06B X06C
	22	Y02A Y02B Y02C
33.94.00‡↔	01	B60A
	04	E64A E65B E75A
		E86A
33.94.09‡↔	01	B60A
	04	E64A E65B E75A
		E86A
33.94.11‡↔	01	B60A
	04	E64A E65B E75A
		E86A
33.94.12‡↔	01	B60A
	04	E64A E65B E75A
		E86A
34.02↔	04	E01A E01B E06A
		E06B E06C
	05	F04Z F13A F13B
	06	G33Z G38A G38B
		G38C
	07	H33Z
	11	L33Z
	21B	X06A X06B X06C
34.03↔	04	E01A E01B E02A
		E02B E02C
	05	F03C F03D F04Z
		F13A F13B F13C

CHOP	MDC	DRG
		F21A F21B F21C
		F31A F31B F31C
	06	G12A G12B G33Z
		G38A G38B G38C
	07	H06Z H33Z
	08	I23A I23B I23C
	09	J02A J02B J03A
		J03B J04Z J11A
		J11B
	10	K09A K09B
	11	L09A L09B L33Z
	12	M06Z M09A M09B
		M37Z
	13	N11A N11B
	14	O02A O02B
	21B	X06A X06B X06C
34.04‡↔		KP
	01	B60A
	05	F62A F62B
	09	J62A
34.05‡↔		KP KPP
	01	B60A
34.06↔		BORP MBOR VAC
		VBOR
	01	B17A B17B
	03	D12A D12B
	04	E02A E02B E02C
		E36A E36B
	05	F04Z F13A F13B
		F21A F21B F21C
	06	G12A G12B G16A
		G38A G38B
	07	H06Z
	08	I27A I27B I27C
		I27D
	09	J11A J11B
	10	K09A K09B
	11	L09A L09B
	12	M06Z M37Z
	13	N11A N11B
	21B	X06A X06B X06C
34.09.10‡↔		KPP
	01	B60A
34.1↔		BORP MBOR VAC
		VBOR
	04	E02A E02B E36A
		E36B
	05	F04Z F13A F13B
		F21A F21B F21C
	06	G12A G16A G38A
		G38B
	10	K09A K09B
	21B	X06A X06B X06C
34.20↔	01	B17A B17B
	03	D12A D12B
	04	E02A E02B E02C
	05	F21A F21B F21C
	06	G12A G12B
	07	H06Z
	09	J11A J11B
	10	K09A K09B
	11	L09A L09B
	12	M06Z M37Z
	13	N11A N11B
	21B	X06A X06B X06C
34.21.00↔		BORP MBOR VAC
		VBOR
	01	B17A B17B
	03	D12A D12B
	04	E02A E02B E02C

PROC

PROC

CHOP	MDC	DRG
		E36A E36B
	05	F04Z F13A F13B
		F21A F21B F21C
	06	G12A G12B G16A
		G38A G38B
	07	H06Z
	08	I27A I27B I27C
		I27D
	09	J11A J11B
	10	K09A K09B
	11	L09A L09B
	12	M06Z M37Z
	13	N11A N11B
	21B	X06A X06B X06C
34.21.10↔		BORP MBOR VAC
		VAC I VAC II VBOR
	01	B17A B17B
	03	D12A D12B
	04	E02A E02B E02C
		E36A E36B
	05	F04Z F13A F13B
		F21A F21B F21C
	06	G12A G12B G16A
		G38A G38B
	07	H06Z
	08	I27A I27B I27C
		I27D
	09	J11A J11B
	10	K09A K09B
	11	L09A L09B
	12	M06Z M37Z
	13	N11A N11B
	21B	X06A X06B X06C
34.21.20↔		BORP MBOR VAC
		VAC I VAC II VBOR
	01	B17A B17B
	03	D12A D12B
	04	E02A E02B E02C
		E36A E36B
	05	F04Z F13A F13B
		F21A F21B F21C
	06	G12A G12B G16A
		G38A G38B
	07	H06Z
	08	I27A I27B I27C
		I27D
	09	J11A J11B
	10	K09A K09B
	11	L09A L09B
	12	M06Z M37Z
	13	N11A N11B
	21B	X06A X06B X06C
34.21.99↔		BORP MBOR VAC
		VAC I VAC II VBOR
	01	B17A B17B
	03	D12A D12B
	04	E02A E02B E02C
		E36A E36B
	05	F04Z F13A F13B
		F21A F21B F21C
	06	G12A G12B G16A
		G38A G38B
	07	H06Z
	08	I27A I27B I27C
		I27D
	09	J11A J11B
	10	K09A K09B
	11	L09A L09B
	12	M06Z M37Z
	13	N11A N11B

CHOP	MDC	DRG
	21B	X06A X06B X06C
34.22↔	04	E02A E02B E02C
	08	I18A I18B I18C
34.23.10‡↔		AKBB
	01	B60A
	04	E86B
	16	Q86A
34.23.20↔	01	B17A B17B
	04	E02A E02B E02C
	08	I27A I27B I27C
		I27D
	09	J02A J02B J03A
		J03B J04Z J11A
		J11B
	10	K09A K09B
34.23.99‡↔		AKBB
	01	B60A
	04	E86B
	16	Q86A
34.24‡↔		AKBB
	01	B60A
	04	E86B
	16	Q86A
34.25‡↔		AKBB
	01	B60A
	04	E86B
	16	Q86A
34.26↔		BORP MBOR VAC
		VAC I VAC II VBOR
	04	E02A E02B E02C
		E36A E36B
	05	F21A F21B F21C
	06	G12A G16A G38A
		G38B
	10	K09A K09B
	21B	X06A X06B X06C
34.27.10‡↔		AKBB
	01	B60A
	04	E86B
	16	Q86A
34.27.20↔		BORP MBOR VAC
		VAC I VAC II VBOR
	04	E01A E01B E06A
		E06B E06C E36A
		E36B
	06	G12A G16A G38A
		G38B
	21B	X06A X06B X06C
34.27.99‡↔		AKBB
	01	B60A
	04	E86B
	16	Q86A
34.3X.10↔	04	E01A E01B E02A
		E02B E02C E06A
		E06B E06C
	06	G12A G12B
	07	H33Z
	08	I28A I28B
	09	J02A J02B J03A
		J03B J04Z J11A
		J11B
	10	K09A K09B
	11	L33Z
	13	N11A N11B
	21B	X06A X06B X06C
34.3X.21↔		BORP MBOR VAC
		VBOR
	04	E01A E01B E02A
		E02B E02C E06A
		E06B E06C E36A

CHOP	MDC	DRG
		E36B
	06	G12A G12B G16A
		G38A G38B
	07	H33Z
	08	I28A I28B
	09	J02A J02B J03A
		J03B J04Z J11A
		J11B
	10	K09A K09B
	11	L33Z
	13	N11A N11B
	21B	X06A X06B X06C
34.3X.22↔		BORP KORP MBOR
		MKOR VAC VAC I
		VAC II VBOR VKOR
	04	E01A E01B E02A
		E02B E02C E05A
		E05B E05C E36A
		E36B
	06	G12A G12B G16A
		G33Z G38A G38B
		G38C
	07	H33Z
	08	I28A I28B
	09	J02A J02B J03A
		J03B J04Z J11A
		J11B
	10	K09A K09B
	11	L33Z
	13	N11A N11B
	21B	X06A X06B X06C
34.3X.23↔		BORP KORP MBOR
		MKOR VAC VAC I
		VAC II VBOR VKOR
	04	E01A E01B E02A
		E02B E02C E05A
		E05B E05C E36A
		E36B
	06	G12A G12B G16A
		G33Z G38A G38B
		G38C
	07	H33Z
	08	I28A I28B
	09	J02A J02B J03A
		J03B J04Z J11A
		J11B
	10	K09A K09B
	11	L33Z
	13	N11A N11B
	21B	X06A X06B X06C
34.3X.24↔		BORP KORP MBOR
		MKOR VAC VAC I
		VAC II VBOR VKOR
	04	E01A E01B E02A
		E02B E02C E05A
		E05B E05C E36A
		E36B
	06	G12A G12B G16A
		G33Z G38A G38B
		G38C
	07	H33Z
	08	I28A I28B
	09	J02A J02B J03A
		J03B J04Z J11A
		J11B
	10	K09A K09B
	11	L33Z
	13	N11A N11B
	21B	X06A X06B X06C
34.3X.25↔		BORP KORP MBOR

CHOP	MDC	DRG
		MKOR VAC VAC I
		VAC II VBOR VKOR
	04	E01A E01B E02A
		E02B E02C E05A
		E05B E05C E36A
		E36B
	06	G12A G12B G16A
		G33Z G38A G38B
		G38C
	07	H33Z
	08	I28A I28B
	09	J02A J02B J03A
		J03B J04Z J11A
		J11B
	10	K09A K09B
	11	L33Z
	13	N11A N11B
	21B	X06A X06B X06C
34.3X.26↔		BORP KORP MBOR
		MKOR VAC VAC I
		VAC II VBOR VKOR
	04	E01A E01B E02A
		E02B E02C E05A
		E05B E05C E36A
		E36B
	06	G12A G12B G16A
		G33Z G38A G38B
		G38C
	07	H33Z
	08	I28A I28B
	09	J02A J02B J03A
		J03B J04Z J11A
		J11B
	10	K09A K09B
	11	L33Z
	13	N11A N11B
	21B	X06A X06B X06C
34.3X.27↔		BORP KORP MBOR
		MKOR VAC VAC I
		VAC II VBOR VKOR
	04	E01A E01B E02A
		E02B E02C E05A
		E05B E05C E36A
		E36B
	06	G12A G12B G16A
		G33Z G38A G38B
		G38C
	07	H33Z
	08	I28A I28B
	09	J02A J02B J03A
		J03B J04Z J11A
		J11B
	10	K09A K09B
	11	L33Z
	13	N11A N11B
	21B	X06A X06B X06C
34.3X.28↔		BORP KORP MBOR
		MKOR VAC VAC I
		VAC II VBOR VKOR
	04	E01A E01B E02A
		E02B E02C E05A
		E05B E05C E36A
		E36B
	06	G12A G12B G16A
		G33Z G38A G38B
		G38C
	07	H33Z
	08	I28A I28B
	09	J02A J02B J03A
		J03B J04Z J11A

CHOP	MDC	DRG
		J11B
	10	K09A K09B
	11	L33Z
	13	N11A N11B
	21B	X06A X06B X06C
34.3X.29↔	04	E01A E01B E02A
		E02B E02C E05A
		E05B E05C
	06	G12A G12B
	07	H33Z
	08	I28A I28B
	09	J02A J02B J03A
		J03B J04Z J11A
		J11B
	10	K09A K09B
	11	L33Z
	13	N11A N11B
	21B	X06A X06B X06C
34.3X.30↔	04	E01A E01B E02A
		E02B E02C E06A
		E06B E06C
	06	G12A G12B
	07	H33Z
	08	I28A I28B
	09	J02A J02B J03A
		J03B J04Z J11A
		J11B
	10	K09A K09B
	11	L33Z
	13	N11A N11B
	21B	X06A X06B X06C
34.3X.99↔	04	E01A E01B E02A
		E02B E02C E06A
		E06B E06C
	06	G12A G12B
	07	H33Z
	08	I28A I28B
	09	J02A J02B J03A
		J03B J04Z J11A
		J11B
	10	K09A K09B
	11	L33Z
	13	N11A N11B
	21B	X06A X06B X06C
34.4X.10↔	01	B03A B03B B03C
	04	E01A E01B E02A
		E02B E02C E06A
		E06B E06C
	06	G12A G12B
	07	H33Z
	08	I28A I28B
	09	J02A J02B J03A
		J03B J04Z J11A
		J11B J18A J23A
		J23B J25Z
	10	K09A K09B
	11	L33Z
	13	N11A N11B
	21B	X06A X06B X07A
		X07B
34.4X.21↔		BORP MBOR VAC
		VBOR
	01	B03A B03B B03C
	04	E01A E01B E02A
		E02B E02C E06A
		E06B E06C E36A
		E36B
	06	G12A G12B G16A
		G38A G38B
	07	H33Z

CHOP	MDC	DRG
	08	I28A I28B
	09	J02A J02B J03A
		J03B J04Z J11A
		J11B J18A J23A
		J23B J25Z
	10	K09A K09B
	11	L33Z
	13	N11A N11B
	21B	X06A X06B X07A
		X07B
34.4X.22↔		BORP MBOR VAC
		VBOR
	01	B03A B03B B03C
	04	E01A E01B E02A
		E02B E02C E06A
		E06B E06C E36A
		E36B
	06	G12A G12B G16A
		G33Z G38A G38B
		G38C
	07	H33Z
	08	I28A I28B
	09	J01A J01B J02A
		J02B J03A J03B
		J04Z J11A J11B
		J18A J23A J23B
		J25Z
	10	K09A K09B
	11	L33Z
	13	N11A N11B
	21B	X06A X06B X07A
		X07B
34.4X.31↔		BORP KORP MBOR
		MKOR VAC VAC I
		VAC II VBOR VKOR
	01	B03A B03B B03C
	04	E01A E01B E02A
		E02B E02C E05A
		E05B E05C E36A
		E36B
	06	G12A G12B G16A
		G33Z G38A G38B
		G38C
	07	H33Z
	08	I28A I28B
	09	J01A J01B J02A
		J02B J03A J03B
		J04Z J11A J11B
	10	K09A K09B
	11	L33Z
	13	N11A N11B
	21B	X06A X06B X07A
		X07B
34.4X.32↔		BORP KORP MBOR
		MKOR VAC VAC I
		VAC II VBOR VKOR
	01	B03A B03B B03C
	04	E01A E01B E02A
		E02B E02C E05A
		E05B E05C E36A
		E36B
	06	G12A G12B G16A
		G33Z G38A G38B
		G38C
	07	H33Z
	08	I28A I28B
	09	J01A J01B J02A
		J02B J03A J03B
		J04Z J11A J11B
	10	K09A K09B

PROC

PROC

CHOP	MDC	DRG
	11	L33Z
	13	N11A N11B
	21B	X06A X06B X07A
		X07B
34.4X.40↔	04	E02A E02B E02C
	06	G12A G12B
	08	I28A I28B I28C
	09	J11A J11B J18A
		J23A J23B J25Z
	10	K09A K09B
	13	N11A N11B
	21B	X06A X06B X06C
34.4X.99↔	04	E02A E02B E02C
	06	G12A G12B
	08	I28A I28B I28C
	09	J11A J11B J18A
		J23A J23B J25Z
	10	K09A K09B
	13	N11A N11B
	21B	X06A X06B X06C
34.51.00↔		BORP MBOR VAC
		VAC I VAC II VBOR
	04	E01A E01B E05A
		E05B E05C E36A
		E36B
	05	F21A F21B F21C
	06	G12A G16A G33Z
		G38A G38B G38C
	07	H33Z
	11	L33Z
	21B	X06A X06B X06C
	22	Y02A Y02B Y02C
34.51.11↔		BORP MBOR VAC
		VAC I VAC II VBOR
	04	E01A E01B E05A
		E05B E05C E33A
		E33B E36A E36B
	05	F21A F21B F21C
	06	G12A G12B G16A
		G33Z G38A G38B
		G38C
	07	H33Z
	09	J11A J11B
	11	L33Z
	13	N11A N11B
	21B	X06A X06B X06C
	22	Y02A Y02B Y02C
34.51.12↔		BORP MBOR VAC
		VAC I VAC II VBOR
	04	E01A E01B E05A
		E05B E05C E33A
		E33B E36A E36B
	05	F21A F21B F21C
	06	G12A G12B G16A
		G33Z G38A G38B
		G38C
	07	H33Z
	09	J11A J11B
	11	L33Z
	13	N11A N11B
	21B	X06A X06B X06C
	22	Y02A Y02B Y02C
34.51.13↔		BORP MBOR VAC
		VAC I VAC II VBOR
	04	E01A E01B E05A
		E05B E05C E33A
		E33B E36A E36B
	05	F21A F21B F21C
	06	G12A G12B G16A
		G33Z G38A G38B
		G38C
	07	H33Z
	09	J11A J11B
	11	L33Z
	13	N11A N11B
	21B	X06A X06B X06C
	22	Y02A Y02B Y02C
34.51.14↔		BORP MBOR VAC
		VAC I VAC II VBOR
	04	E01A E01B E05A
		E05B E05C E33A
		E33B E36A E36B
	05	F21A F21B F21C
	06	G12A G12B G16A
		G33Z G38A G38B
		G38C
	07	H33Z
	09	J11A J11B
	11	L33Z
	13	N11A N11B
	21B	X06A X06B X06C
	22	Y02A Y02B Y02C
34.51.15↔		BORP MBOR VAC
		VAC I VAC II VBOR
	04	E01A E01B E05A
		E05B E05C E33A
		E33B E36A E36B
	05	F21A F21B F21C
	06	G12A G12B G16A
		G33Z G38A G38B
		G38C
	07	H33Z
	09	J11A J11B
	11	L33Z
	13	N11A N11B
	21B	X06A X06B X06C
	22	Y02A Y02B Y02C
34.51.16↔		BORP MBOR VAC
		VAC I VAC II VBOR
	04	E01A E01B E05A
		E05B E05C E33A
		E33B E36A E36B
	05	F21A F21B F21C
	06	G12A G12B G16A
		G33Z G38A G38B
		G38C
	07	H33Z
	09	J11A J11B
	11	L33Z
	13	N11A N11B
	21B	X06A X06B X06C
	22	Y02A Y02B Y02C
34.51.99↔		BORP MBOR VAC
		VAC I VAC II VBOR
	04	E01A E01B E05A
		E05B E05C E33A
		E33B E36A E36B
	05	F21A F21B F21C
	06	G12A G12B G16A
		G33Z G38A G38B
		G38C
	07	H33Z
	09	J11A J11B
	11	L33Z
	13	N11A N11B
	21B	X06A X06B X06C
	22	Y02A Y02B Y02C
34.52.00↔		BORP MBOR VAC
		VAC I VAC II VBOR
	04	E01A E01B E05A
		E05B E05C E36A
		E36B
	05	F21A F21B F21C
	06	G12A G16A G33Z
		G38A G38B G38C
	07	H33Z
	09	J11A J11B
	11	L33Z
	13	N11A N11B
	21B	X06A X06B X06C
	22	Y02A Y02B Y02C
34.52.11↔		BORP MBOR VAC
		VAC I VAC II VBOR
	04	E01A E01B E05A
		E05B E05C E36A
		E36B
	05	F21A F21B F21C
	06	G12A G12B G16A
		G33Z G38A G38B
		G38C
	07	H33Z
	09	J11A J11B
	11	L33Z
	13	N11A N11B
	21B	X06A X06B X06C
	22	Y02A Y02B Y02C
34.52.12↔		BORP MBOR VAC
		VAC I VAC II VBOR
	04	E01A E01B E05A
		E05B E05C E36A
		E36B
	05	F21A F21B F21C
	06	G12A G12B G16A
		G33Z G38A G38B
		G38C
	07	H33Z
	09	J11A J11B
	11	L33Z
	13	N11A N11B
	21B	X06A X06B X06C
	22	Y02A Y02B Y02C
34.52.13↔		BORP MBOR VAC
		VAC I VAC II VBOR
	04	E01A E01B E05A
		E05B E05C E36A
		E36B
	05	F21A F21B F21C
	06	G12A G12B G16A
		G33Z G38A G38B
		G38C
	07	H33Z
	09	J11A J11B
	11	L33Z
	13	N11A N11B
	21B	X06A X06B X06C
	22	Y02A Y02B Y02C
34.52.14↔		BORP MBOR VAC
		VAC I VAC II VBOR
	04	E01A E01B E05A
		E05B E05C E36A
		E36B
	05	F21A F21B F21C
	06	G12A G12B G16A
		G33Z G38A G38B
		G38C
	07	H33Z
	09	J11A J11B
	11	L33Z
	13	N11A N11B
	21B	X06A X06B X06C
	22	Y02A Y02B Y02C
34.52.15↔		BORP MBOR VAC

CHOP	MDC	DRG
		VAC I VAC II VBOR
	04	E01A E01B E05A E05B E05C E36A E36B
	05	F21A F21B F21C
	06	G12A G12B G16A G33Z G38A G38B G38C
	07	H33Z
	09	J11A J11B
	11	L33Z
	13	N11A N11B
	21B	X06A X06B X06C
	22	Y02A Y02B Y02C
34.52.16↔		BORP MBOR VAC VAC I VAC II VBOR
	04	E01A E01B E05A E05B E05C E36A E36B
	05	F21A F21B F21C
	06	G12A G12B G16A G33Z G38A G38B G38C
	07	H33Z
	09	J11A J11B
	11	L33Z
	13	N11A N11B
	21B	X06A X06B X06C
	22	Y02A Y02B Y02C
34.52.99↔		BORP MBOR VAC VAC I VAC II VBOR
	04	E01A E01B E05A E05B E05C E36A E36B
	05	F21A F21B F21C
	06	G12A G12B G16A G33Z G38A G38B G38C
	07	H33Z
	09	J11A J11B
	11	L33Z
	13	N11A N11B
	21B	X06A X06B X06C
	22	Y02A Y02B Y02C
34.59.10↔		BORP MBOR VAC VAC I VAC II VBOR
	04	E01A E01B E05A E05B E05C E36A E36B
	05	F21A F21B F21C
	06	G12A G12B G16A G33Z G38A G38B G38C
	07	H33Z
	09	J11A J11B
	11	L33Z
	13	N11A N11B
	21B	X06A X06B X06C
	22	Y02A Y02B Y02C
34.59.20↔		BORP MBOR VAC VAC I VAC II VBOR
	04	E01A E01B E05A E05B E05C E33A E33B E36A E36B
	05	F21A F21B F21C
	06	G12A G12B G16A G33Z G38A G38B G38C
	07	H33Z
	09	J11A J11B
	11	L33Z
	13	N11A N11B
	21B	X06A X06B X06C
	22	Y02A Y02B Y02C
34.6X.11↔		BORP MBOR VAC VAC I VAC II VBOR
	04	E02A E02B E36A E36B
	05	F21A F21B F21C
	06	G12A G12B G16A G33Z G38A G38B G38C
	07	H33Z
	09	J11A J11B
	11	L33Z
	13	N11A N11B
	21B	X06A X06B X06C
34.6X.12↔		BORP MBOR VAC VAC I VAC II VBOR
	04	E02A E02B E36A E36B
	05	F21A F21B F21C
	06	G12A G12B G16A G33Z G38A G38B G38C
	07	H33Z
	09	J11A J11B
	11	L33Z
	13	N11A N11B
	21B	X06A X06B X06C
34.6X.13↔		BORP MBOR VAC VAC I VAC II VBOR
	04	E02A E02B E36A E36B
	05	F21A F21B F21C
	06	G12A G12B G16A G33Z G38A G38B G38C
	07	H33Z
	09	J11A J11B
	11	L33Z
	13	N11A N11B
	21B	X06A X06B X06C
34.6X.19↔		BORP MBOR VAC VAC I VAC II VBOR
	04	E02A E02B E36A E36B
	05	F21A F21B F21C
	06	G12A G12B G16A G33Z G38A G38B G38C
	07	H33Z
	09	J11A J11B
	11	L33Z
	13	N11A N11B
	21B	X06A X06B X06C
34.6X.21↔		BORP MBOR VAC VAC I VAC II VBOR
	04	E02A E02B E02C E36A E36B
	05	F21A F21B F21C
	06	G12A G12B G16A G33Z G38A G38B G38C
	07	H33Z
	08	I28A I28B I28C
	09	J11A J11B
	11	L33Z
	13	N11A N11B
	21B	X06A X06B X06C
34.6X.22↔		BORP MBOR VAC VAC I VAC II VBOR
	04	E02A E02B E02C E36A E36B
	05	F21A F21B F21C
	06	G12A G12B G16A G33Z G38A G38B G38C
	07	H33Z
	08	I28A I28B I28C
	09	J11A J11B
	11	L33Z
	13	N11A N11B
	21B	X06A X06B X06C
34.6X.23↔		BORP MBOR VAC VAC I VAC II VBOR
	04	E02A E02B E02C E36A E36B
	05	F21A F21B F21C
	06	G12A G12B G16A G33Z G38A G38B G38C
	07	H33Z
	08	I28A I28B I28C
	09	J11A J11B
	11	L33Z
	13	N11A N11B
	21B	X06A X06B X06C
34.6X.29↔		BORP MBOR VAC VAC I VAC II VBOR
	04	E02A E02B E02C E36A E36B
	05	F21A F21B F21C
	06	G12A G12B G16A G33Z G38A G38B G38C
	07	H33Z
	08	I28A I28B I28C
	09	J11A J11B
	11	L33Z
	13	N11A N11B
	21B	X06A X06B X06C
34.6X.99↔		BORP MBOR VAC VAC I VAC II VBOR
	04	E02A E02B E02C E36A E36B
	05	F21A F21B F21C
	06	G12A G12B G16A G33Z G38A G38B G38C
	07	H33Z
	08	I28A I28B I28C
	09	J11A J11B
	11	L33Z
	13	N11A N11B
	21B	X06A X06B X06C
34.71↔		BORP MBOR VAC VAC I VAC II VBOR
	04	E01A E01B E06A E06B E06C E36A E36B
	06	G12A G16A G33Z G38A G38B G38C
	07	H33Z
	09	J02A J02B J03A J03B J04Z J11A J11B
	11	L33Z
	21B	X06A X06B
	22	Y02A Y02B Y02C

PROC

PROC

CHOP	MDC	DRG
34.72↔		BORP MBOR VAC VAC I VAC II VBOR
	04	E01A E01B E06A E06B E06C E36A E36B
	06	G12A G16A G38A G38B
	07	H33Z
	09	J02A J02B J03A J03B J04Z J11A J11B
	11	L33Z
	21B	X06A X06B
	22	Y02A Y02B Y02C
34.73↔		BORP MBOR VAC VAC I VAC II VBOR
	04	E01A E01B E05A E05B E05C E36A E36B
	06	G12A G16A G33Z G38A G38B G38C
	07	H33Z
	09	J02A J02B J03A J03B J04Z J11A J11B
	11	L33Z
	21B	X06A X06B X06C
	22	Y02A Y02B Y02C
34.74↔		BORP KORP MBOR MKOR VAC VAC I VAC II VBOR VKOR
	04	E01A E01B E06A E06B E06C E36A E36B
	06	G12A G16A G33Z G38A G38B G38C
	07	H33Z
	08	I28A I28B
	11	L33Z
	21B	X07A X07B
34.75↔		BORP MBOR VAC VAC I VAC II VBOR
	04	E01A E01B E06A E06B E06C E36A E36B
	06	G12A G16A G38A G38B
	07	H33Z
	09	J02A J02B J03A J03B J04Z J11A J11B
	11	L33Z
	21B	X06A X06B
	22	Y02A Y02B Y02C
34.76↔		BORP KORP MBOR MKOR VAC VAC I VAC II VBOR VKOR
	04	E01A E01B E06A E06B E06C E36A E36B
	05	F31A F31B F31C F31D F31E
	06	G12A G16A G33Z G38A G38B G38C
	07	H33Z
	08	I28A I28B
	09	J02A J02B J03A J03B J04Z J11A J11B
	11	L33Z
	21B	X06A X06B
	22	Y02A Y02B Y02C
34.77↔		BORP KORP MBOR MKOR VAC VAC I VAC II VBOR VKOR
	04	E01A E01B E06A E06B E06C E36A E36B
	05	F31A F31B F31C F31D F31E
	06	G12A G16A G33Z G38A G38B G38C
	07	H33Z
	08	I28A I28B
	09	J02A J02B J03A J03B J04Z J11A J11B
	11	L33Z
	21B	X06A X06B
	22	Y02A Y02B Y02C
34.79↔		BORP KORP MBOR MKOR VAC VAC I VAC II VBOR VKOR
	04	E01A E01B E06A E06B E06C E36A E36B
	05	F31A F31B F31C F31D F31E
	06	G12A G16A G33Z G38A G38B G38C
	07	H33Z
	08	I28A I28B
	09	J02A J02B J03A J03B J04Z J11A J11B
	11	L33Z
	21B	X06A X06B
	22	Y02A Y02B Y02C
34.81↔	04	E01A E01B E06A E06B E06C
	06	G33Z G38A G38B G38C
	07	H33Z
	08	I28A I28B
	11	L33Z
	13	N04A N04B N07A N33Z
	21B	X06A X06B X06C X07A X07B
34.82↔		BORP KORP MBOR MKOR MVE VAC VAC I VAC II VBOR VKOR
	04	E01A E01B E06A E06B E06C E36A E36B
	06	G09C G12A G16A G33Z G38A G38B G38C
	07	H33Z
	11	L33Z
	21B	X06A X06B X06C X07A X07B
34.83↔		BORP KORP MBOR MKOR VAC VAC I VAC II VBOR VKOR
	04	E01A E01B E06A E06B E06C E36A E36B
	06	G12A G16A G33Z G38A G38B G38C
	07	H33Z
	11	L33Z
	21B	X06A X06B X06C X07A X07B
34.84↔		MVE
	04	E01A E01B E06A E06B E06C
	06	G02A G02B G16A G16B G18A G18B G19A G19B G33Z G38A G38B G38C
	07	H01B H33Z
	11	L33Z
	21B	X06A X06B X06C X07A X07B
34.85↔		BORP KORP MBOR MKOR VAC VAC I VAC II VBOR VKOR
	01	B21A B21B B21C B21D B21E B21F
	04	E36A E36B
	06	G12A G16A G38A G38B
34.89.00↔	04	E02A E02B E02C
	08	I23A I23B I23C
	09	J02A J02B J03A J03B J04Z J11A J11B
	10	K09A K09B
	21B	X06A X06B X06C
34.89.10↔	04	E02A E02B E02C
	08	I23A I23B I23C
	09	J02A J02B J03A J03B J04Z J11A J11B
	10	K09A K09B
	21B	X06A X06B X06C
34.89.99↔	04	E02A E02B E02C
	08	I23A I23B I23C
	09	J02A J02B J03A J03B J04Z J11A J11B
	10	K09A K09B
	21B	X06A X06B X06C
34.93↔	01	B03A B03B B03C
	04	E02A E02B E02C
	08	I28A I28B I28C
	21B	X06A X06B
34.99.00↔	04	E02A E02B E02C
	08	I23A I23B I23C
	21B	X06A X06B
34.99.10↔		BORP MBOR VAC VAC I VAC II VBOR
	04	E02A E02B E02C E36A E36B
	06	G12A G16A G38A G38B
	08	I23A I23B I23C
	21B	X06A X06B
34.99.99↔	04	E02A E02B E02C
	08	I23A I23B I23C
	21B	X06A X06B
35.31↔		BORP KORP MBOR MKOR VAC VAC I VAC II VBOR VKOR
	04	E36A E36B
	05	F01A F01C F03A F03B F03C F03D F03E F04Z F30Z

CHOP	MDC	DRG
	06	G12A G16A G33Z G38A G38B G38C
	07	H33Z
	11	L33Z
	15	P02A P02B P02C
	21B	X06A X06B X06C X07A X07B
	Prä	A06A A06B A06C A07A
35.32↔		BORP KORP MBOR MKOR VAC VAC I VAC II VBOR VKOR
	04	E36A E36B
	05	F01A F01C F03A F03B F03C F03D F03E F04Z F30Z
	06	G12A G16A G33Z G38A G38B G38C
	07	H33Z
	11	L33Z
	15	P02A P02B P02C
	21B	X06A X06B X06C X07A X07B
	Prä	A06A A06B A06C A07A
35.34↔		BORP KORP MBOR MKOR VAC VAC I VAC II VBOR VKOR
	04	E36A E36B
	05	F01A F01C F03A F03B F03C F03D F03E F04Z F30Z
	06	G12A G16A G33Z G38A G38B G38C
	07	H33Z
	11	L33Z
	15	P02A P02B P02C
	21B	X07A X07B
	Prä	A06A A06B A06C A07A
35.35.00↔		BORP KORP MBOR MKOR VAC VAC I VAC II VBOR VKOR
	04	E36A E36B
	05	F01A F01C F03A F03B F03C F03D F03E F04Z F30Z
	06	G12A G16A G33Z G38A G38B G38C
	07	H33Z
	11	L33Z
	15	P02A P02B P02C
	21B	X07A X07B
	Prä	A06A A06B A06C A07A
35.35.09↔		BORP KORP MBOR MKOR VAC VAC I VAC II VBOR VKOR
	04	E36A E36B
	05	F01A F01C F03A F03B F03C F03D F03E F04Z F30Z
	06	G12A G16A G33Z G38A G38B G38C
	07	H33Z
	11	L33Z
	15	P02A P02B P02C
	21B	X07A X07B
	Prä	A06A A06B A06C A07A
35.35.10↔		BORP KORP MBOR MKOR VAC VAC I VAC II VBOR VKOR
	04	E36A E36B
	05	F01A F01C F03A F03B F03C F03D F03E F04Z F30Z
	06	G12A G16A G33Z G38A G38B G38C
	07	H33Z
	11	L33Z
	15	P02A P02B P02C
	21B	X07A X07B
	Prä	A06A A06B A06C A07A
35.36.00↔		BORP KORP MBOR MKOR VAC VAC I VAC II VBOR VKOR
	04	E36A E36B
	05	F01A F01C F03A F03B F03C F03D F03E F04Z F30Z
	06	G12A G16A G33Z G38A G38B G38C
	07	H33Z
	11	L33Z
	15	P02A P02B P02C
	21B	X06A X06B X06C X07A X07B
	Prä	A06A A06B A06C A07A
35.36.09↔		BORP KORP MBOR MKOR VAC VAC I VAC II VBOR VKOR
	04	E36A E36B
	05	F01A F01C F03A F03B F03C F03D F03E F04Z F30Z
	06	G12A G16A G33Z G38A G38B G38C
	07	H33Z
	11	L33Z
	15	P02A P02B P02C
	21B	X06A X06B X06C X07A X07B
	Prä	A06A A06B A06C A07A
35.36.11↔		BORP KORP MBOR MKOR VAC VAC I VAC II VBOR VKOR
	04	E36A E36B
	05	F01A F01C F03A F03B F03C F03D F03E F04Z F30Z
	06	G12A G16A G33Z G38A G38B G38C
	07	H33Z
	11	L33Z
	15	P02A P02B P02C
	21B	X06A X06B X06C X07A X07B
	Prä	A06A A06B A06C A07A
35.36.21↔		BORP KORP MBOR MKOR VAC VAC I VAC II VBOR VKOR
	04	E36A E36B
	05	F01A F01C F03A F03B F03C F03D F03E F04Z F30Z
	06	G12A G16A G33Z G38A G38B G38C
	07	H33Z
	11	L33Z
	15	P02A P02B P02C
	21B	X07A X07B
	Prä	A06A A06B A06C A07A
35.41.00↔		BORP KORP MBOR MKOR VAC VAC I VAC II VBOR VKOR
	04	E36A E36B
	05	F01A F01C F12A F19Z F30Z F31A F31B F31C F31D F31E F50A F50B
	06	G12A G16A G33Z G38A G38B G38C
	07	H33Z
	11	L33Z
	15	P02A P02B P02C
	21B	X07A X07B
35.41.10↔		BORP KORP MBOR MKOR VAC VAC I VAC II VBOR VKOR
	04	E36A E36B
	05	F01A F01C F12A F30Z F31A F31B F31C F31D F31E F50A F50B
	06	G12A G16A G33Z G38A G38B G38C
	07	H33Z
	11	L33Z
	15	P02A P02B P02C
	21B	X07A X07B
35.41.20↔		BORP KORP MBOR MKOR VAC VAC I VAC II VBOR VKOR
	04	E36A E36B
	05	F01A F01C F12A F19Z F30Z F31A F31B F31C F31D F31E F50A F50B
	06	G12A G16A G33Z G38A G38B G38C
	07	H33Z
	11	L33Z
	15	P02A P02B P02C
	21B	X07A X07B
35.41.99↔		BORP KORP MBOR MKOR VAC VAC I VAC II VBOR VKOR
	04	E36A E36B
	05	F01A F01C F12A F19Z F30Z F31A F31B F31C F31D F31E F50A F50B
	06	G12A G16A G33Z G38A G38B G38C
	07	H33Z
	11	L33Z
	15	P02A P02B P02C
	21B	X07A X07B
35.42.00↔		BORP KORP MBOR MKOR VAC VAC I VAC II VBOR VKOR
	04	E36A E36B
	05	F01A F01C F12A

PROC

CHOP	MDC	DRG
		F19Z F30Z F31A
		F31B F31C F31D
		F31E F50A F50B
	06	G12A G16A G33Z
		G38A G38B G38C
	07	H33Z
	11	L33Z
	15	P02A P02B P02C
	21B	X07A X07B
35.42.09↔		BORP KORP MBOR
		MKOR VAC VAC I
		VAC II VBOR VKOR
	04	E36A E36B
	05	F01A F01C F12A
		F19Z F30Z F31A
		F31B F31C F31D
		F31E F50A F50B
	06	G12A G16A G33Z
		G38A G38B G38C
	07	H33Z
	11	L33Z
	15	P02A P02B P02C
	21B	X07A X07B
35.42.10↔		BORP KORP MBOR
		MKOR VAC VAC I
		VAC II VBOR VKOR
	04	E36A E36B
	05	F01A F01C F12A
		F30Z F31A F31B
		F31C F31D F31E
		F50A F50B
	06	G12A G16A G33Z
		G38A G38B G38C
	07	H33Z
	11	L33Z
	15	P02A P02B P02C
	21B	X07A X07B
35.42.21↔		BORP KORP MBOR
		MKOR VAC VAC I
		VAC II VBOR VKOR
	04	E36A E36B
	05	F01A F01C F12A
		F19Z F30Z F31A
		F31B F31C F31D
		F31E F50A F50B
	06	G12A G16A G33Z
		G38A G38B G38C
	07	H33Z
	11	L33Z
	15	P02A P02B P02C
	21B	X07A X07B
35.42.22↔		BORP KORP MBOR
		MKOR VAC VAC I
		VAC II VBOR VKOR
	04	E36A E36B
	05	F01A F01C F12A
		F19Z F30Z F31A
		F31B F31C F31D
		F31E F50A F50B
	06	G12A G16A G33Z
		G38A G38B G38C
	07	H33Z
	11	L33Z
	15	P02A P02B P02C
	21B	X07A X07B
35.43.00↔		BORP KORP MBOR
		MKOR VAC VAC I
		VAC II VBOR VKOR
	04	E36A E36B
	05	F01A F01C F03B
		F03C F03D F30Z
		F31A F31B F31C
		F31D F31E
	06	G12A G16A G33Z
		G38A G38B G38C
	07	H33Z
	11	L33Z
	15	P02A P02B P02C
	Prä	A06A A06B A06C
		A07A
35.43.10↔		BORP KORP MBOR
		MKOR VAC VAC I
		VAC II VBOR VKOR
	04	E36A E36B
	05	F01A F01C F03B
		F03C F03D F30Z
		F31A F31B F31C
		F31D F31E
	06	G12A G16A G33Z
		G38A G38B G38C
	07	H33Z
	11	L33Z
	15	P02A P02B P02C
	21B	X07A X07B
	Prä	A06A A06B A06C
		A07A
35.43.20↔		BORP KORP MBOR
		MKOR VAC VAC I
		VAC II VBOR VKOR
	04	E36A E36B
	05	F01A F01C F12A
		F19Z F30Z F31A
		F31B F31C F31D
		F31E F50A F50B
	06	G12A G16A G33Z
		G38A G38B G38C
	07	H33Z
	11	L33Z
	15	P02A P02B P02C
	21B	X07A X07B
35.43.99↔		BORP KORP MBOR
		MKOR VAC VAC I
		VAC II VBOR VKOR
	04	E36A E36B
	05	F01A F01C F03B
		F03C F03D F30Z
		F31A F31B F31C
		F31D F31E
	06	G12A G16A G33Z
		G38A G38B G38C
	07	H33Z
	11	L33Z
	15	P02A P02B P02C
	21B	X07A X07B
	Prä	A06A A06B A06C
		A07A
35.50↔		BORP KORP MBOR
		MKOR VAC VAC I
		VAC II VBOR VKOR
	04	E36A E36B
	05	F01A F01C F03B
		F03C F03D F30Z
		F31A F31B F31C
		F31D F31E
	06	G12A G16A G33Z
		G38A G38B G38C
	07	H33Z
	11	L33Z
	15	P02A P02B P02C
	21B	X07A X07B
	Prä	A06A A06B A06C
		A07A
35.51↔		BORP KORP MBOR
		MKOR VAC VAC I
		VAC II VBOR VKOR
	01	B04A B04B B04C
	04	E01A E01B E36A
		E36B
	05	F01A F01C F03B
		F03C F03D F30Z
		F31A F31B F31C
		F31D F31E F98B
	06	G12A G16A G33Z
		G38A G38B G38C
	07	H33Z
	11	L33Z
	15	P02A P02B P02C
	21B	X07A X07B
	Prä	A06A A06B A06C
		A07A
35.53↔		BORP KORP MBOR
		MKOR VAC VAC I
		VAC II VBOR VKOR
	04	E36A E36B
	05	F01A F01C F03B
		F03C F03D F12A
		F30Z F31A F31B
		F31C F31D F31E
		F50A F50B
	06	G12A G16A G33Z
		G38A G38B G38C
	07	H33Z
	11	L33Z
	15	P02A P02B P02C
	21B	X07A X07B
	Prä	A06A A06B A06C
		A07A
35.54↔		BORP KORP MBOR
		MKOR VAC VAC I
		VAC II VBOR VKOR
	04	E36A E36B
	05	F01A F01C F03B
		F03C F03D F30Z
		F31A F31B F31C
		F31D F31E
	06	G12A G16A G33Z
		G38A G38B G38C
	07	H33Z
	11	L33Z
	15	P02A P02B P02C
	21B	X07A X07B
	Prä	A06A A06B A06C
		A07A
35.55↔		BORP MBOR VAC
		VAC I VAC II VBOR
	04	E36A E36B
	05	F12A F50A F50B
		F95A F95B
	06	G12A G16A G38A
		G38B
	15	P02A P02B P02C
35.60↔		BORP KORP MBOR
		MKOR VAC VAC I
		VAC II VBOR VKOR
	04	E36A E36B
	05	F01A F01C F03B
		F03C F03D F30Z
		F31A F31B F31C
		F31D F31E

CHOP	MDC	DRG
	06	G12A G16A G33Z G38A G38B G38C
	07	H33Z
	11	L33Z
	15	P02A P02B P02C
	21B	X07A X07B
	Prä	A06A A06B A06C A07A
35.61↔		BORP KORP MBOR MKOR VAC VAC I VAC II VBOR VKOR
	01	B04A B04B B04C
	04	E01A E01B E36A E36B
	05	F01A F01C F03B F03C F03D F12A F30Z F31A F31B F31C F31D F31E F50A F50B F98B
	06	G12A G16A G33Z G38A G38B G38C
	07	H33Z
	11	L33Z
	15	P02A P02B P02C
	21B	X07A X07B
	Prä	A06A A06B A06C A07A
35.62↔		BORP KORP MBOR MKOR VAC VAC I VAC II VBOR VKOR
	04	E36A E36B
	05	F01A F01C F03B F03C F03D F12A F30Z F31A F31B F31C F31D F31E F50A F50B
	06	G12A G16A G33Z G38A G38B G38C
	07	H33Z
	11	L33Z
	15	P02A P02B P02C
	21B	X07A X07B
	Prä	A06A A06B A06C A07A
35.63↔		BORP KORP MBOR MKOR VAC VAC I VAC II VBOR VKOR
	04	E36A E36B
	05	F01A F01C F03B F03C F03D F30Z F31A F31B F31C F31D F31E
	06	G12A G16A G33Z G38A G38B G38C
	07	H33Z
	11	L33Z
	15	P02A P02B P02C
	21B	X07A X07B
	Prä	A06A A06B A06C A07A
35.70↔		BORP KORP MBOR MKOR VAC VAC I VAC II VBOR VKOR
	04	E36A E36B
	05	F01A F01C F03B F03C F03D F30Z F31A F31B F31C F31D F31E
	06	G12A G16A G33Z G38A G38B G38C
	07	H33Z
	11	L33Z
	15	P02A P02B P02C
	21B	X07A X07B
	Prä	A06A A06B A06C A07A
35.71↔		BORP KORP MBOR MKOR VAC VAC I VAC II VBOR VKOR
	04	E36A E36B
	05	F01A F01C F03B F03C F03D F30Z F31A F31B F31C F31D F31E
	06	G12A G16A G33Z G38A G38B G38C
	07	H33Z
	11	L33Z
	15	P02A P02B P02C
	21B	X07A X07B
	Prä	A06A A06B A06C A07A
35.72.00↔		BORP KORP MBOR MKOR VAC VAC I VAC II VBOR VKOR
	04	E36A E36B
	05	F01A F01C F03B F03C F03D F30Z F31A F31B F31C F31D F31E
	06	G12A G16A G33Z G38A G38B G38C
	07	H33Z
	11	L33Z
	15	P02A P02B P02C
	21B	X07A X07B
	Prä	A06A A06B A06C A07A
35.72.10↔		BORP KORP MBOR MKOR VAC VAC I VAC II VBOR VKOR
	04	E36A E36B
	05	F01A F01C F03B F03C F03D F30Z F31A F31B F31C F31D F31E
	06	G12A G16A G33Z G38A G38B G38C
	07	H33Z
	11	L33Z
	15	P02A P02B P02C
	21B	X07A X07B
	Prä	A06A A06B A06C A07A
35.72.99↔		BORP KORP MBOR MKOR VAC VAC I VAC II VBOR VKOR
	04	E36A E36B
	05	F01A F01C F03B F03C F03D F30Z F31A F31B F31C F31D F31E
	06	G12A G16A G33Z G38A G38B G38C
	07	H33Z
	11	L33Z
	15	P02A P02B P02C
	21B	X07A X07B
	Prä	A06A A06B A06C A07A
35.73↔		BORP KORP MBOR MKOR VAC VAC I VAC II VBOR VKOR
	04	E36A E36B
	05	F01A F01C F03B F03C F03D F30Z F31A F31B F31C F31D F31E
	06	G12A G16A G33Z G38A G38B G38C
	07	H33Z
	11	L33Z
	15	P02A P02B P02C
	21B	X07A X07B
	Prä	A06A A06B A06C A07A
35.81↔		BORP KORP MBOR MKOR VAC VAC I VAC II VBOR VKOR
	04	E36A E36B
	05	F01A F01C F03B F03C F03D F30Z
	06	G12A G16A G33Z G38A G38B G38C
	07	H33Z
	11	L33Z
	15	P02A P02B P02C
	21B	X07A X07B
	Prä	A06A A06B A06C A07A
35.82↔		BORP KORP MBOR MKOR VAC VAC I VAC II VBOR VKOR
	04	E36A E36B
	05	F01A F01C F03B F03C F03D F30Z
	06	G12A G16A G33Z G38A G38B G38C
	07	H33Z
	11	L33Z
	15	P02A P02B P02C
	21B	X07A X07B
	Prä	A06A A06B A06C A07A
35.83↔		BORP KORP MBOR MKOR VAC VAC I VAC II VBOR VKOR
	04	E36A E36B
	05	F01A F01C F30Z
	06	G12A G16A G33Z G38A G38B G38C
	07	H33Z
	11	L33Z
	15	P02A P02B P02C
	21B	X07A X07B
	Prä	A06A A06B A06C A07A
35.84↔		BORP KORP MBOR MKOR VAC VAC I VAC II VBOR VKOR
	04	E36A E36B
	05	F01A F01C F30Z
	06	G12A G16A G33Z G38A G38B G38C
	07	H33Z
	11	L33Z
	15	P02A P02B P02C
	21B	X07A X07B
	Prä	A06A A06B A06C A07A

PROC

PROC

CHOP	MDC	DRG
35.85↔		BORP KORP MBOR MKOR VAC VAC I VAC II VBOR VKOR
	04	E36A E36B
	05	F01A F01C F30Z
	06	G12A G16A G33Z G38A G38B G38C
	07	H33Z
	11	L33Z
	15	P02A P02B P02C
	21B	X07A X07B
	Prä	A06A A06B A06C A07A
35.91↔		BORP KORP MBOR MKOR VAC VAC I VAC II VBOR VKOR
	04	E36A E36B
	05	F01A F01C F03B F03C F03D F30Z F31A F31B F31C F31D F31E
	06	G12A G16A G33Z G38A G38B G38C
	07	H33Z
	11	L33Z
	15	P02A P02B P02C
	21B	X07A X07B
	Prä	A06A A06B A06C A07A
35.92↔		BORP KORP MBOR MKOR VAC VAC I VAC II VBOR VKOR
	04	E36A E36B
	05	F01A F01C F03B F03C F03D F30Z F31A F31B F31C F31D F31E
	06	G12A G16A G33Z G38A G38B G38C
	07	H33Z
	11	L33Z
	15	P02A P02B P02C
	21B	X07A X07B
	Prä	A06A A06B A06C A07A
35.93↔		BORP KORP MBOR MKOR VAC VAC I VAC II VBOR VKOR
	04	E36A E36B
	05	F01A F01C F03B F03C F03D F30Z F31A F31B F31C F31D F31E
	06	G12A G16A G33Z G38A G38B G38C
	07	H33Z
	11	L33Z
	15	P02A P02B P02C
	21B	X07A X07B
	Prä	A06A A06B A06C A07A
35.94↔		BORP KORP MBOR MKOR VAC VAC I VAC II VBOR VKOR
	04	E36A E36B
	05	F01A F01C F03B F03C F03D F30Z F31A F31B F31C F31D F31E
	06	G12A G16A G33Z G38A G38B G38C
	07	H33Z
	11	L33Z
	15	P02A P02B P02C
	21B	X07A X07B
	Prä	A06A A06B A06C A07A
35.95↔		BORP KORP MBOR MKOR VAC VAC I VAC II VBOR VKOR
	04	E36A E36B
	05	F01A F01C F03A F03B F03C F03D F04Z F06A F06B F30Z F31A F31B F31C
	06	G12A G16A G33Z G38A G38B G38C
	07	H33Z
	11	L33Z
	15	P02A P02B P02C
	21B	X07A X07B
	Prä	A06A A06B A06C A07A
35.98.11↔		BORP KORP MBOR MKOR VAC VAC I VAC II VBOR VKOR
	01	B04A B04B B04C
	04	E01A E01B E36A E36B
	05	F12A F50A F50B F95A F95B F98B
	06	G12A G16A G38A G38B
	15	P02A P02B P02C
35.98.12↔		BORP KORP MBOR MKOR VAC VAC I VAC II VBOR VKOR
	01	B04A B04B B04C
	04	E01A E01B E36A E36B
	05	F12A F50A F50B F95A F95B F98B
	06	G12A G16A G38A G38B
	15	P02A P02B P02C
35.98.19↔		BORP KORP MBOR MKOR VAC VAC I VAC II VBOR VKOR
	01	B04A B04B B04C
	04	E01A E01B E36A E36B
	05	F01A F01C F12A F30Z F31A F31B F31C F31D F31E F50A F50B F98B
	06	G12A G16A G33Z G38A G38B G38C
	07	H33Z
	11	L33Z
	15	P02A P02B P02C
	21B	X07A X07B
35.98.30↔		BORP KORP MBOR MKOR VAC VAC I VAC II VBOR VKOR
	04	E36A E36B
	05	F01A F01C F12A F30Z F31A F31B F31C F31D F31E F50A F50B
	06	G12A G16A G33Z G38A G38B G38C
	07	H33Z
	11	L33Z
	15	P02A P02B P02C
	21B	X07A X07B
	Prä	A06A A06B A06C A07A
35.98.99↔		BORP KORP MBOR MKOR VAC VBOR VKOR
	04	E36A E36B
	05	F01A F01C F03B F03C F03D F30Z F31A F31B F31C F31D F31E
	06	G12A G16A G33Z G38A G38B G38C
	07	H33Z
	11	L33Z
	15	P02A P02B P02C
	21B	X07A X07B
35.A1.00↔		BORP KORP MBOR MKOR VAC VAC I VAC II VBOR VKOR
	04	E36A E36B
	05	F01A F01C F03A F03B F03C F03D F03E F04Z F30Z
	06	G12A G16A G38A G38B
	15	P02A P02B P02C
35.A1.09↔		BORP KORP MBOR MKOR VAC VAC I VAC II VBOR VKOR
	04	E36A E36B
	05	F01A F01C F03A F03B F03C F03D F03E F04Z F30Z
	06	G12A G16A G38A G38B
	15	P02A P02B P02C
35.A1.11↔		BORP KORP MBOR MKOR VAC VAC I VAC II VBOR VKOR
	04	E36A E36B
	05	F01A F01C F03A F03B F03C F03D F03E F04Z F30Z F31A F31B F31C F31D F31E
	06	G12A G16A G33Z G38A G38B G38C
	07	H33Z
	11	L33Z
	15	P02A P02B P02C
	21B	X07A X07B
	Prä	A06A A06B A06C A07A
35.A1.12↔		BORP KORP MBOR MKOR VAC VAC I VAC II VBOR VKOR
	04	E36A E36B
	05	F01A F01C F03A F03B F03C F03D F03E F04Z F30Z F31A F31B F31C F31D F31E
	06	G12A G16A G33Z G38A G38B G38C
	07	H33Z
	11	L33Z

CHOP	MDC	DRG
	15	P02A P02B P02C
	21B	X07A X07B
	Prä	A06A A06B A06C A07A
35.A1.13↔		BORP KORP MBOR MKOR VAC VAC I VAC II VBOR VKOR
	04	E36A E36B
	05	F01A F01C F03A F03B F03C F03D F03E F04Z F30Z
	06	G12A G16A G38A G38B
	15	P02A P02B P02C
35.A1.14↔		BORP KORP MBOR MKOR VAC VAC I VAC II VBOR VKOR
	04	E36A E36B
	05	F01A F01C F03A F03B F03C F03D F03E F04Z F30Z
	06	G12A G16A G38A G38B
	15	P02A P02B P02C
35.A2.00↔		BORP KORP MBOR MKOR VAC VAC I VAC II VBOR VKOR
	04	E36A E36B
	05	F01A F01C F03A F03B F03C F03D F03E F04Z F30Z
	06	G12A G16A G38A G38B
	15	P02A P02B P02C
35.A2.09↔		BORP KORP MBOR MKOR VAC VAC I VAC II VBOR VKOR
	04	E36A E36B
	05	F01A F01C F03A F03B F03C F03D F03E F04Z F30Z
	06	G12A G16A G38A G38B
	15	P02A P02B P02C
35.A2.11↔		BORP KORP MBOR MKOR VAC VAC I VAC II VBOR VKOR
	04	E36A E36B
	05	F01A F01C F03A F03B F03C F03D F03E F04Z F30Z
	06	G12A G16A G33Z G38A G38B G38C
	07	H33Z
	11	L33Z
	15	P02A P02B P02C
	21B	X07A X07B
	Prä	A06A A06B A06C A07A
35.A2.12↔		BORP KORP MBOR MKOR VAC VAC I VAC II VBOR VKOR
	04	E36A E36B
	05	F01A F01C F03A F03B F03C F03D F03E F04Z F30Z
	06	G12A G16A G33Z G38A G38B G38C
	07	H33Z
	11	L33Z

CHOP	MDC	DRG
	15	P02A P02B P02C
	21B	X07A X07B
	Prä	A06A A06B A06C A07A
35.A2.13↔		BORP KORP MBOR MKOR VAC VAC I VAC II VBOR VKOR
	04	E36A E36B
	05	F01A F01C F03A F03B F03C F03D F03E F04Z F30Z
	06	G12A G16A G38A G38B
	15	P02A P02B P02C
35.A2.14↔		BORP KORP MBOR MKOR VAC VAC I VAC II VBOR VKOR
	04	E36A E36B
	05	F01A F01C F03A F03B F03C F03D F03E F04Z F30Z
	06	G12A G16A G38A G38B
	15	P02A P02B P02C
35.A3.00↔		BORP KORP MBOR MKOR VAC VAC I VAC II VBOR VKOR
	04	E36A E36B
	05	F01A F01C F03A F03B F03C F03D F03E F04Z F30Z
	06	G12A G16A G38A G38B
	15	P02A P02B P02C
35.A3.09↔		BORP KORP MBOR MKOR VAC VAC I VAC II VBOR VKOR
	04	E36A E36B
	05	F01A F01C F03A F03B F03C F03D F03E F04Z F30Z
	06	G12A G16A G38A G38B
	15	P02A P02B P02C
35.A3.11↔		BORP KORP MBOR MKOR VAC VAC I VAC II VBOR VKOR
	04	E36A E36B
	05	F01A F01C F03A F03B F03C F03D F03E F04Z F30Z
	06	G12A G16A G33Z G38A G38B G38C
	07	H33Z
	11	L33Z
	15	P02A P02B P02C
	21B	X07A X07B
	Prä	A06A A06B A06C A07A
35.A3.12↔		BORP KORP MBOR MKOR VAC VAC I VAC II VBOR VKOR
	04	E36A E36B
	05	F01A F01C F03A F03B F03C F03D F03E F04Z F30Z
	06	G12A G16A G33Z G38A G38B G38C
	07	H33Z
	11	L33Z

CHOP	MDC	DRG
	15	P02A P02B P02C
	21B	X07A X07B
	Prä	A06A A06B A06C A07A
35.A3.13↔		BORP KORP MBOR MKOR VAC VAC I VAC II VBOR VKOR
	04	E36A E36B
	05	F01A F01C F03A F03B F03C F03D F03E F04Z F30Z
	06	G12A G16A G38A G38B
	15	P02A P02B P02C
35.A3.14↔		BORP KORP MBOR MKOR VAC VAC I VAC II VBOR VKOR
	04	E36A E36B
	05	F01A F01C F03A F03B F03C F03D F03E F04Z F30Z
	06	G12A G16A G38A G38B
	15	P02A P02B P02C
35.A4.00↔		BORP KORP MBOR MKOR VAC VAC I VAC II VBOR VKOR
	04	E36A E36B
	05	F01A F01C F03A F03B F03C F03D F03E F04Z F30Z
	06	G12A G16A G38A G38B
	15	P02A P02B P02C
35.A4.09↔		BORP KORP MBOR MKOR VAC VAC I VAC II VBOR VKOR
	04	E36A E36B
	05	F01A F01C F03A F03B F03C F03D F03E F04Z F30Z
	06	G12A G16A G38A G38B
	15	P02A P02B P02C
35.A4.11↔		BORP KORP MBOR MKOR VAC VAC I VAC II VBOR VKOR
	04	E36A E36B
	05	F01A F01C F03A F03B F03C F03D F03E F04Z F30Z
	06	G12A G16A G33Z G38A G38B G38C
	07	H33Z
	11	L33Z
	15	P02A P02B P02C
	21B	X07A X07B
	Prä	A06A A06B A06C A07A
35.A4.12↔		BORP KORP MBOR MKOR VAC VAC I VAC II VBOR VKOR
	04	E36A E36B
	05	F01A F01C F03A F03B F03C F03D F03E F04Z F30Z
	06	G12A G16A G33Z G38A G38B G38C
	07	H33Z
	11	L33Z

PROC

CHOP	MDC	DRG
	15	P02A P02B P02C
	21B	X07A X07B
	Prä	A06A A06B A06C A07A
35.A4.13↔		BORP KORP MBOR MKOR VAC VAC I VAC II VBOR VKOR
	04	E36A E36B
	05	F01A F01C F03A F03B F03C F03D F03E F04Z F30Z
	06	G12A G16A G38A G38B
	15	P02A P02B P02C
35.A4.14↔		BORP KORP MBOR MKOR VAC VAC I VAC II VBOR VKOR
	04	E36A E36B
	05	F01A F01C F03A F03B F03C F03D F03E F04Z F30Z
	06	G12A G16A G38A G38B
	15	P02A P02B P02C
35.B0↔	05	F01A F01C F04Z F06A F06B F06C F12A F19Z F50A F50B
35.B1.11↔	05	F01A F01C F04Z F06A F06B F06C F12A F19Z F50A F50B
35.B1.12↔	05	F01A F01C F04Z F06A F06B F06C F12A F19Z F50A F50B
35.B1.13↔	05	F01A F01C F04Z F06A F06B F06C F12A F19Z F50A F50B
35.B1.14↔	05	F01A F01C F04Z F06A F06B F06C F12A F19Z F50A F50B
35.B9↔	05	F01A F01C F04Z F06A F06B F06C F12A F19Z F50A F50B
35.C1.00↔		BORP KORP MBOR MKOR VAC VAC I VAC II VBOR VKOR
	04	E36A E36B
	05	F01A F01C F03A F03B F03C F03D F03E F04Z F30Z
	06	G12A G16A G38A G38B
	15	P02A P02B P02C
35.C1.09↔		BORP KORP MBOR MKOR VAC VAC I VAC II VBOR VKOR
	04	E36A E36B
	05	F01A F01C F03A F03B F03C F03D F03E F04Z F30Z
	06	G12A G16A G38A G38B
	15	P02A P02B P02C
35.C1.11↔		BORP KORP MBOR MKOR VAC VAC I VAC II VBOR VKOR
	04	E36A E36B
	05	F01A F01C F03A F03B F03C F03D F03E F04Z F30Z
	06	G12A G16A G38A G38B
	15	P02A P02B P02C
	21B	X07A X07B
	Prä	A06A A06B A06C A07A
35.C1.12↔		BORP KORP MBOR MKOR VAC VAC I VAC II VBOR VKOR
	04	E36A E36B
	05	F01A F01C F03A F03B F03C F03D F03E F04Z F30Z
	06	G12A G16A G33Z G38A G38B G38C
	07	H33Z
	11	L33Z
	15	P02A P02B P02C
	21B	X07A X07B
	Prä	A06A A06B A06C A07A
35.C2.00↔		BORP KORP MBOR MKOR VAC VAC I VAC II VBOR VKOR
	04	E36A E36B
	05	F01A F01C F03A F03B F03C F03D F03E F04Z F30Z
	06	G12A G16A G38A G38B
	15	P02A P02B P02C
35.C2.09↔		BORP KORP MBOR MKOR VAC VAC I VAC II VBOR VKOR
	04	E36A E36B
	05	F01A F01C F03A F03B F03C F03D F03E F04Z F30Z
	06	G12A G16A G38A G38B
	15	P02A P02B P02C
35.C2.11↔		BORP KORP MBOR MKOR VAC VAC I VAC II VBOR VKOR
	04	E36A E36B
	05	F01A F01C F03A F03B F03C F03D F03E F04Z F30Z
	06	G12A G16A G33Z G38A G38B G38C
	07	H33Z
	11	L33Z
	15	P02A P02B P02C
	21B	X07A X07B
	Prä	A06A A06B A06C A07A
35.C2.12↔		BORP KORP MBOR MKOR VAC VAC I VAC II VBOR VKOR
	04	E36A E36B
	05	F01A F01C F03A F03B F03C F03D F03E F04Z F30Z
	06	G12A G16A G33Z G38A G38B G38C
	07	H33Z
	11	L33Z
	15	P02A P02B P02C
	21B	X07A X07B
	Prä	A06A A06B A06C A07A
35.C2.13↔		BORP KORP MBOR MKOR VAC VAC I VAC II VBOR VKOR
	04	E36A E36B
	05	F01A F01C F04Z F06A F06B F06C F12A F19Z F50A F50B
	06	G12A G16A G38A G38B
35.C2.14↔	05	F01A F01C F04Z F06A F06B F06C F12A F19Z F50A F50B
35.C3.00↔		BORP KORP MBOR MKOR VAC VAC I VAC II VBOR VKOR
	04	E36A E36B
	05	F01A F01C F03A F03B F03C F03D F03E F04Z F30Z
	06	G12A G16A G38A G38B
	15	P02A P02B P02C
35.C3.09↔		BORP KORP MBOR MKOR VAC VAC I VAC II VBOR VKOR
	04	E36A E36B
	05	F01A F01C F03A F03B F03C F03D F03E F04Z F30Z
	06	G12A G16A G38A G38B
	15	P02A P02B P02C
35.C3.11↔		BORP KORP MBOR MKOR VAC VAC I VAC II VBOR VKOR
	04	E36A E36B
	05	F01A F01C F03A F03B F03C F03D F03E F04Z F30Z
	06	G12A G16A G33Z G38A G38B G38C
	07	H33Z
	11	L33Z
	15	P02A P02B P02C
	21B	X07A X07B
	Prä	A06A A06B A06C A07A
35.C3.12↔		BORP KORP MBOR MKOR VAC VAC I VAC II VBOR VKOR
	04	E36A E36B
	05	F01A F01C F03A F03B F03C F03D F03E F04Z F30Z
	06	G12A G16A G33Z G38A G38B G38C
	07	H33Z
	11	L33Z

CHOP	MDC	DRG
	15	P02A P02B P02C
	21B	X07A X07B
	Prä	A06A A06B A06C A07A
35.C3.13↔	05	F01A F01C F04Z F06A F06B F06C F12A F19Z F50A F50B
35.C3.14↔	05	F01A F01C F04Z F06A F06B F06C F12A F19Z F50A F50B
35.C4.00↔		BORP KORP MBOR MKOR VAC VAC I VAC II VBOR VKOR
	04	E36A E36B
	05	F01A F01C F03A F03B F03C F03D F03E F04Z F30Z
	06	G12A G16A G38A G38B
	15	P02A P02B P02C
35.C4.09↔		BORP KORP MBOR MKOR VAC VAC I VAC II VBOR VKOR
	04	E36A E36B
	05	F01A F01C F03A F03B F03C F03D F03E F04Z F30Z
	06	G12A G16A G38A G38B
	15	P02A P02B P02C
35.C4.11↔		BORP KORP MBOR MKOR VAC VAC I VAC II VBOR VKOR
	04	E36A E36B
	05	F01A F01C F03A F03B F03C F03D F03E F04Z F30Z
	06	G12A G16A G33Z G38A G38B G38C
	07	H33Z
	11	L33Z
	15	P02A P02B P02C
	21B	X07A X07B
	Prä	A06A A06B A06C A07A
35.C4.12↔		BORP KORP MBOR MKOR VAC VAC I VAC II VBOR VKOR
	04	E36A E36B
	05	F01A F01C F03A F03B F03C F03D F03E F04Z F30Z
	06	G12A G16A G33Z G38A G38B G38C
	07	H33Z
	11	L33Z
	15	P02A P02B P02C
	21B	X07A X07B
	Prä	A06A A06B A06C A07A
35.C4.13↔	05	F01A F01C F04Z F06A F06B F06C F12A F19Z F50A F50B
35.C4.14↔	05	F01A F01C F04Z F06A F06B F06C F12A F19Z F50A F50B
35.D1.00↔		BORP KORP MBOR MKOR VAC VAC I VAC II VBOR VKOR
	04	E36A E36B
	05	F01A F01C F03A F03B F03C F03D F03E F04Z F30Z
	06	G12A G16A G33Z G38A G38B G38C
	07	H33Z
	11	L33Z
	15	P02A P02B P02C
	21B	X07A X07B
	Prä	A06A A06B A06C A07A
35.D1.09↔		BORP KORP MBOR MKOR VAC VAC I VAC II VBOR VKOR
	04	E36A E36B
	05	F01A F01C F03A F03B F03C F03D F03E F04Z F30Z
	06	G12A G16A G33Z G38A G38B G38C
	07	H33Z
	11	L33Z
	15	P02A P02B P02C
	21B	X07A X07B
	Prä	A06A A06B A06C A07A
35.D1.11↔		BORP KORP MBOR MKOR VAC VAC I VAC II VBOR VKOR
	04	E36A E36B
	05	F01A F01C F03A F03B F03C F03D F03E F04Z F30Z
	06	G12A G16A G33Z G38A G38B G38C
	07	H33Z
	11	L33Z
	15	P02A P02B P02C
	21B	X07A X07B
	Prä	A06A A06B A06C A07A
35.D1.12↔		BORP KORP MBOR MKOR VAC VAC I VAC II VBOR VKOR
	04	E36A E36B
	05	F01A F01C F03A F03B F03C F03D F03E F04Z F30Z
	06	G12A G16A G33Z G38A G38B G38C
	07	H33Z
	11	L33Z
	15	P02A P02B P02C
	21B	X07A X07B
	Prä	A06A A06B A06C A07A
35.D1.13↔		BORP KORP MBOR MKOR VAC VAC I VAC II VBOR VKOR
	04	E36A E36B
	05	F01A F01C F03A F03B F03C F03D F03E F04Z F30Z
	06	G12A G16A G33Z G38A G38B G38C
	07	H33Z
	11	L33Z
	15	P02A P02B P02C
	21B	X07A X07B
	Prä	A06A A06B A06C A07A
35.D1.14↔		BORP KORP MBOR MKOR VAC VAC I VAC II VBOR VKOR
	04	E36A E36B
	05	F01A F01C F03A F03B F03C F03D F03E F04Z F30Z
	06	G12A G16A G33Z G38A G38B G38C
	07	H33Z
	11	L33Z
	15	P02A P02B P02C
	21B	X07A X07B
	Prä	A06A A06B A06C A07A
35.D2.00↔		BORP KORP MBOR MKOR VAC VAC I VAC II VBOR VKOR
	04	E36A E36B
	05	F01A F01C F03A F03B F03C F03D F03E F04Z F30Z
	06	G12A G16A G33Z G38A G38B G38C
	07	H33Z
	11	L33Z
	15	P02A P02B P02C
	21B	X07A X07B
	Prä	A06A A06B A06C A07A
35.D2.09↔		BORP KORP MBOR MKOR VAC VAC I VAC II VBOR VKOR
	04	E36A E36B
	05	F01A F01C F03A F03B F03C F03D F03E F04Z F30Z
	06	G12A G16A G33Z G38A G38B G38C
	07	H33Z
	11	L33Z
	15	P02A P02B P02C
	21B	X07A X07B
	Prä	A06A A06B A06C A07A
35.D2.11↔		BORP KORP MBOR MKOR VAC VAC I VAC II VBOR VKOR
	04	E36A E36B
	05	F01A F01C F03A F03B F03C F03D F03E F04Z F30Z
	06	G12A G16A G33Z G38A G38B G38C
	07	H33Z
	11	L33Z
	15	P02A P02B P02C
	21B	X07A X07B
	Prä	A06A A06B A06C A07A
35.D2.12↔		BORP KORP MBOR MKOR VAC VAC I VAC II VBOR VKOR
	04	E36A E36B
	05	F01A F01C F03A

PROC

PROC

CHOP	MDC	DRG
		F03B F03C F03D
		F03E F04Z F30Z
	06	G12A G16A G33Z
		G38A G38B G38C
	07	H33Z
	11	L33Z
	15	P02A P02B P02C
	21B	X07A X07B
	Prä	A06A A06B A06C
		A07A
35.D2.14↔		BORP KORP MBOR
		MKOR VAC VAC I
		VAC II VBOR VKOR
	04	E36A E36B
	05	F01A F01C F03B
		F03C F03D F30Z
		F98A F98B F98C
		F98D
	06	G12A G16A G33Z
		G38A G38B G38C
	07	H33Z
	11	L33Z
	15	P02A P02B P02C
	21B	X07A X07B
	Prä	A06A A06B A06C
		A07A
35.D2.21↔		BORP KORP MBOR
		MKOR VAC VAC I
		VAC II VBOR VKOR
	04	E36A E36B
	05	F01A F01C F04Z
		F06A F06B F06C
		F12A F50A F50B
		F98A F98B F98C
		F98D
	06	G12A G16A G38A
		G38B
35.D2.22↔		BORP KORP MBOR
		MKOR VAC VAC I
		VAC II VBOR VKOR
	04	E36A E36B
	05	F01A F01C F04Z
		F06A F06B F06C
		F12A F50A F50B
		F98A F98B F98C
		F98D
	06	G12A G16A G38A
		G38B
35.D2.23↔		BORP KORP MBOR
		MKOR VAC VAC I
		VAC II VBOR VKOR
	04	E36A E36B
	05	F01A F01C F04Z
		F06A F06B F06C
		F12A F50A F50B
		F98A F98B F98C
		F98D
	06	G12A G16A G38A
		G38B
35.D3.00↔		BORP KORP MBOR
		MKOR VAC VAC I
		VAC II VBOR VKOR
	04	E36A E36B
	05	F01A F01C F03A
		F03B F03C F03D
		F03E F04Z F30Z
	06	G12A G16A G33Z
		G38A G38B G38C
	07	H33Z
	11	L33Z
	15	P02A P02B P02C
	21B	X07A X07B
	Prä	A06A A06B A06C
		A07A
35.D3.09↔		BORP KORP MBOR
		MKOR VAC VAC I
		VAC II VBOR VKOR
	04	E36A E36B
	05	F01A F01C F03A
		F03B F03C F03D
		F03E F04Z F30Z
	06	G12A G16A G33Z
		G38A G38B G38C
	07	H33Z
	11	L33Z
	15	P02A P02B P02C
	21B	X07A X07B
	Prä	A06A A06B A06C
		A07A
35.D3.11↔		BORP KORP MBOR
		MKOR VAC VAC I
		VAC II VBOR VKOR
	04	E36A E36B
	05	F01A F01C F03A
		F03B F03C F03D
		F03E F04Z F30Z
	06	G12A G16A G33Z
		G38A G38B G38C
	07	H33Z
	11	L33Z
	15	P02A P02B P02C
	21B	X07A X07B
	Prä	A06A A06B A06C
		A07A
35.D3.12↔		BORP KORP MBOR
		MKOR VAC VAC I
		VAC II VBOR VKOR
	04	E36A E36B
	05	F01A F01C F03A
		F03B F03C F03D
		F03E F04Z F30Z
	06	G12A G16A G33Z
		G38A G38B G38C
	07	H33Z
	11	L33Z
	15	P02A P02B P02C
	21B	X07A X07B
	Prä	A06A A06B A06C
		A07A
35.D3.13↔		BORP KORP MBOR
		MKOR VAC VAC I
		VAC II VBOR VKOR
	04	E36A E36B
	05	F01A F01C F03A
		F03B F03C F03D
		F03E F04Z F30Z
	06	G12A G16A G33Z
		G38A G38B G38C
	07	H33Z
	11	L33Z
	15	P02A P02B P02C
	21B	X07A X07B
	Prä	A06A A06B A06C
		A07A
35.D3.14↔		BORP KORP MBOR
		MKOR VAC VAC I
		VAC II VBOR VKOR
	04	E36A E36B
	05	F01A F01C F03A
		F03B F03C F03D
		F03E F04Z F30Z
	06	G12A G16A G33Z
		G38A G38B G38C
	07	H33Z
	11	L33Z
	15	P02A P02B P02C
	21B	X07A X07B
	Prä	A06A A06B A06C
		A07A
35.D4.00↔		BORP KORP MBOR
		MKOR VAC VAC I
		VAC II VBOR VKOR
	04	E36A E36B
	05	F01A F01C F03A
		F03B F03C F03D
		F03E F04Z F30Z
	06	G12A G16A G33Z
		G38A G38B G38C
	07	H33Z
	11	L33Z
	15	P02A P02B P02C
	21B	X07A X07B
	Prä	A06A A06B A06C
		A07A
35.D4.09↔		BORP KORP MBOR
		MKOR VAC VAC I
		VAC II VBOR VKOR
	04	E36A E36B
	05	F01A F01C F03A
		F03B F03C F03D
		F03E F04Z F30Z
	06	G12A G16A G33Z
		G38A G38B G38C
	07	H33Z
	11	L33Z
	15	P02A P02B P02C
	21B	X07A X07B
	Prä	A06A A06B A06C
		A07A
35.D4.11↔		BORP KORP MBOR
		MKOR VAC VAC I
		VAC II VBOR VKOR
	04	E36A E36B
	05	F01A F01C F03A
		F03B F03C F03D
		F03E F04Z F30Z
	06	G12A G16A G33Z
		G38A G38B G38C
	07	H33Z
	11	L33Z
	15	P02A P02B P02C
	21B	X07A X07B
	Prä	A06A A06B A06C
		A07A
35.D4.12↔		BORP KORP MBOR
		MKOR VAC VAC I
		VAC II VBOR VKOR
	04	E36A E36B
	05	F01A F01C F03A
		F03B F03C F03D
		F03E F04Z F30Z
	06	G12A G16A G33Z
		G38A G38B G38C
	07	H33Z
	11	L33Z
	15	P02A P02B P02C
	21B	X07A X07B
	Prä	A06A A06B A06C
		A07A
35.D4.14↔		BORP KORP MBOR

CHOP	MDC	DRG
		MKOR VAC VAC I
		VAC II VBOR VKOR
	04	E36A E36B
	05	F01A F01C F03B
		F03C F03D F30Z
		F98A F98B F98C
		F98D
	06	G12A G16A G33Z
		G38A G38B G38C
	07	H33Z
	11	L33Z
	15	P02A P02B P02C
	21B	X07A X07B
	Prä	A06A A06B A06C
		A07A
35.D4.21↔		BORP KORP MBOR
		MKOR VAC VAC I
		VAC II VBOR VKOR
	04	E36A E36B
	05	F01A F01C F03B
		F03C F03D F30Z
		F98A F98B F98C
		F98D
	06	G12A G16A G33Z
		G38A G38B G38C
	07	H33Z
	11	L33Z
	15	P02A P02B P02C
	21B	X07A X07B
	Prä	A06A A06B A06C
		A07A
35.D4.22↔		BORP KORP MBOR
		MKOR VAC VAC I
		VAC II VBOR VKOR
	04	E36A E36B
	05	F01A F01C F03B
		F03C F03D F30Z
		F98A F98B F98C
		F98D
	06	G12A G16A G33Z
		G38A G38B G38C
	07	H33Z
	11	L33Z
	15	P02A P02B P02C
	21B	X07A X07B
	Prä	A06A A06B A06C
		A07A
35.E1.00↔	05	F01A F01C F04Z
		F06A F06B F06C
		F12A F19Z F50A
		F50B
35.E1.09↔	05	F01A F01C F04Z
		F06A F06B F06C
		F12A F19Z F50A
		F50B
35.E1.11↔		BORP KORP MBOR
		MKOR VAC VAC I
		VAC II VBOR VKOR
	04	E36A E36B
	05	F01A F01C F03A
		F03B F03C F03D
		F03E F04Z F30Z
	06	G12A G16A G33Z
		G38A G38B G38C
	07	H33Z
	11	L33Z
	15	P02A P02B P02C
	21B	X07A X07B
	Prä	A06A A06B A06C
		A07A
35.E1.12↔		BORP KORP MBOR
		MKOR VAC VAC I
		VAC II VBOR VKOR
	04	E36A E36B
	05	F01A F01C F03A
		F03B F03C F03D
		F03E F04Z F30Z
	06	G12A G16A G33Z
		G38A G38B G38C
	07	H33Z
	11	L33Z
	15	P02A P02B P02C
	21B	X07A X07B
	Prä	A06A A06B A06C
		A07A
35.E1.13↔	05	F01A F01C F04Z
		F06A F06B F06C
		F12A F19Z F50A
		F50B
35.E1.14↔	05	F01A F01C F04Z
		F06A F06B F06C
		F12A F19Z F50A
		F50B
35.E2.00↔	05	F01A F01C F04Z
		F06A F06B F06C
		F12A F19Z F50A
		F50B
35.E2.09↔	05	F01A F01C F04Z
		F06A F06B F06C
		F12A F19Z F50A
		F50B
35.E2.11↔		BORP KORP MBOR
		MKOR VAC VAC I
		VAC II VBOR VKOR
	04	E36A E36B
	05	F01A F01C F03A
		F03B F03C F03D
		F03E F04Z F30Z
	06	G12A G16A G33Z
		G38A G38B G38C
	07	H33Z
	11	L33Z
	15	P02A P02B P02C
	21B	X07A X07B
	Prä	A06A A06B A06C
		A07A
35.E2.12↔		BORP KORP MBOR
		MKOR VAC VAC I
		VAC II VBOR VKOR
	04	E36A E36B
	05	F01A F01C F03A
		F03B F03C F03D
		F03E F04Z F30Z
	06	G12A G16A G33Z
		G38A G38B G38C
	07	H33Z
	11	L33Z
	15	P02A P02B P02C
	21B	X07A X07B
	Prä	A06A A06B A06C
		A07A
35.E2.13↔		BORP KORP MBOR
		MKOR VAC VAC I
		VAC II VBOR VKOR
	04	E36A E36B
	05	F01A F01C F04Z
		F06A F06B F06C
		F12A F50A F50B
		F98A F98B F98C
	06	G12A G16A G38A
		G38B
35.E2.14↔		BORP KORP MBOR
		MKOR VAC VAC I
		VAC II VBOR VKOR
	04	E36A E36B
	05	F01A F01C F04Z
		F06A F06B F06C
		F12A F50A F50B
		F98A F98B F98C
	06	G12A G16A G38A
		G38B
	Prä	A06A A06B A06C
		A07A A11A
35.E2.15↔	05	F01A F01C F04Z
		F06A F06B F06C
		F12A F50A F50B
		F98A F98B F98C
35.E3.00↔	05	F01A F01C F04Z
		F06A F06B F06C
		F12A F19Z F50A
		F50B
35.E3.09↔	05	F01A F01C F04Z
		F06A F06B F06C
		F12A F19Z F50A
		F50B
35.E3.11↔		BORP KORP MBOR
		MKOR VAC VAC I
		VAC II VBOR VKOR
	04	E36A E36B
	05	F01A F01C F03A
		F03B F03C F03D
		F03E F04Z F30Z
	06	G12A G16A G33Z
		G38A G38B G38C
	07	H33Z
	11	L33Z
	15	P02A P02B P02C
	21B	X07A X07B
	Prä	A06A A06B A06C
		A07A
35.E3.12↔		BORP KORP MBOR
		MKOR VAC VAC I
		VAC II VBOR VKOR
	04	E36A E36B
	05	F01A F01C F03A
		F03B F03C F03D
		F03E F04Z F30Z
	06	G12A G16A G33Z
		G38A G38B G38C
	07	H33Z
	11	L33Z
	15	P02A P02B P02C
	21B	X07A X07B
	Prä	A06A A06B A06C
		A07A
35.E3.13↔	05	F01A F01C F04Z
		F06A F06B F06C
		F12A F19Z F50A
		F50B
35.E3.14↔	05	F01A F01C F04Z
		F06A F06B F06C
		F12A F19Z F50A
		F50B
35.E4.00↔	05	F01A F01C F04Z
		F06A F06B F06C
		F12A F19Z F50A
		F50B
35.E4.09↔	05	F01A F01C F04Z
		F06A F06B F06C
		F12A F19Z F50A

PROC

PROC

CHOP	MDC	DRG
		F50B
35.E4.11↔		BORP KORP MBOR
		MKOR VAC VAC I
		VAC II VBOR VKOR
	04	E36A E36B
	05	F01A F01C F03A
		F03B F03C F03D
		F03E F04Z F30Z
	06	G12A G16A G33Z
		G38A G38B G38C
	07	H33Z
	11	L33Z
	15	P02A P02B P02C
	21B	X07A X07B
	Prä	A06A A06B A06C
		A07A
35.E4.12↔		BORP KORP MBOR
		MKOR VAC VAC I
		VAC II VBOR VKOR
	04	E36A E36B
	05	F01A F01C F03A
		F03B F03C F03D
		F03E F04Z F30Z
	06	G12A G16A G33Z
		G38A G38B G38C
	07	H33Z
	11	L33Z
	15	P02A P02B P02C
	21B	X07A X07B
	Prä	A06A A06B A06C
		A07A
35.E4.14↔	05	F01A F01C F04Z
		F06A F06B F06C
		F12A F50A F50B
		F98A F98B F98C
35.E4.15↔	05	F01A F01C F04Z
		F06A F06B F06C
		F12A F50A F50B
		F98A F98B F98C
35.E4.16↔	05	F01A F01C F04Z
		F06A F06B F06C
		F12A F50A F50B
		F98A F98B F98C
35.F1.00↔		BORP KORP MBOR
		MKOR VAC VAC I
		VAC II VBOR VKOR
	04	E36A E36B
	05	F01A F01C F03A
		F03B F03C F03D
		F03E F04Z F30Z
	06	G12A G16A G33Z
		G38A G38B G38C
	07	H33Z
	11	L33Z
	15	P02A P02B P02C
	21B	X07A X07B
	Prä	A06A A06B A06C
		A07A
35.F1.09↔		BORP KORP MBOR
		MKOR VAC VAC I
		VAC II VBOR VKOR
	04	E36A E36B
	05	F01A F01C F03A
		F03B F03C F03D
		F03E F04Z F30Z
	06	G12A G16A G33Z
		G38A G38B G38C
	07	H33Z
	11	L33Z
	15	P02A P02B P02C
	21B	X07A X07B
	Prä	A06A A06B A06C
		A07A
35.F1.11↔		BORP KORP MBOR
		MKOR VAC VAC I
		VAC II VBOR VKOR
	04	E36A E36B
	05	F01A F01C F03A
		F03B F03C F03D
		F03E F04Z F30Z
	06	G12A G16A G33Z
		G38A G38B G38C
	07	H33Z
	11	L33Z
	15	P02A P02B P02C
	21B	X07A X07B
	Prä	A06A A06B A06C
		A07A
35.F1.12↔		BORP KORP MBOR
		MKOR VAC VAC I
		VAC II VBOR VKOR
	04	E36A E36B
	05	F01A F01C F03A
		F03B F03C F03D
		F03E F04Z F30Z
	06	G12A G16A G33Z
		G38A G38B G38C
	07	H33Z
	11	L33Z
	15	P02A P02B P02C
	21B	X07A X07B
	Prä	A06A A06B A06C
		A07A
35.F1.21↔		BORP KORP MBOR
		MKOR VAC VAC I
		VAC II VBOR VKOR
	04	E36A E36B
	05	F01A F01C F03A
		F03B F03C F03D
		F03E F04Z F30Z
	06	G12A G16A G33Z
		G38A G38B G38C
	07	H33Z
	11	L33Z
	15	P02A P02B P02C
	21B	X07A X07B
	Prä	A06A A06B A06C
		A07A
35.F1.22↔		BORP KORP MBOR
		MKOR VAC VAC I
		VAC II VBOR VKOR
	04	E36A E36B
	05	F01A F01C F03A
		F03B F03C F03D
		F04Z F30Z
	06	G12A G16A G33Z
		G38A G38B G38C
	07	H33Z
	11	L33Z
	15	P02A P02B P02C
	21B	X07A X07B
	Prä	A06A A06B A06C
		A07A
35.F1.23↔		BORP KORP MBOR
		MKOR VAC VAC I
		VAC II VBOR VKOR
	04	E36A E36B
	05	F01A F01C F98A
		F98B F98C F98D
	06	G12A G16A G38A
		G38B
	Prä	A06A A06B A06C
		A07A A11A
35.F1.24↔		BORP KORP MBOR
		MKOR VAC VAC I
		VAC II VBOR VKOR
	04	E36A E36B
	05	F01A F01C F98A
		F98B F98C F98D
	06	G12A G16A G33Z
		G38A G38B G38C
	07	H33Z
	11	L33Z
	15	P02A P02B P02C
	21B	X07A X07B
	Prä	A06A A06B A06C
		A07A A11A
35.F1.25↔		BORP KORP MBOR
		MKOR VAC VAC I
		VAC II VBOR VKOR
	04	E36A E36B
	05	F01A F01C F98A
		F98B F98C F98D
	06	G12A G16A G33Z
		G38A G38B G38C
	07	H33Z
	11	L33Z
	15	P02A P02B P02C
	21B	X07A X07B
	Prä	A06A A06B A06C
		A07A A11A
35.F1.26↔		BORP KORP MBOR
		MKOR VAC VAC I
		VAC II VBOR VKOR
	04	E36A E36B
	05	F01A F01C F98A
		F98B F98C F98D
	06	G12A G16A G38A
		G38B
	Prä	A06A A06B A06C
		A07A A11A
35.F1.31↔		BORP KORP MBOR
		MKOR VAC VAC I
		VAC II VBOR VKOR
	04	E36A E36B
	05	F01A F01C F03A
		F03B F03C F03D
		F03E F04Z F30Z
	06	G12A G16A G33Z
		G38A G38B G38C
	07	H33Z
	11	L33Z
	15	P02A P02B P02C
	21B	X07A X07B
	Prä	A06A A06B A06C
		A07A
35.F1.32↔		BORP KORP MBOR
		MKOR VAC VAC I
		VAC II VBOR VKOR
	04	E36A E36B
	05	F01A F01C F03A
		F03B F03C F03D
		F03E F04Z F30Z
	06	G12A G16A G33Z
		G38A G38B G38C
	07	H33Z
	11	L33Z
	15	P02A P02B P02C
	21B	X07A X07B
	Prä	A06A A06B A06C

CHOP	MDC	DRG
		A07A
35.F1.33↔		BORP KORP MBOR
		MKOR VAC VAC I
		VAC II VBOR VKOR
	04	E36A E36B
	05	F01A F01C F98A
		F98B F98C F98D
	06	G12A G16A G38A
		G38B
	Prä	A06A A06B A06C
		A07A A11A
35.F1.34↔		BORP KORP MBOR
		MKOR VAC VAC I
		VAC II VBOR VKOR
	04	E36A E36B
	05	F01A F01C F98A
		F98B F98C F98D
	06	G12A G16A G33Z
		G38A G38B G38C
	07	H33Z
	11	L33Z
	15	P02A P02B P02C
	21B	X07A X07B
	Prä	A06A A06B A06C
		A07A A11A
35.F1.35↔		BORP KORP MBOR
		MKOR VAC VAC I
		VAC II VBOR VKOR
	04	E36A E36B
	05	F01A F01C F98A
		F98B F98C F98D
	06	G12A G16A G33Z
		G38A G38B G38C
	07	H33Z
	11	L33Z
	15	P02A P02B P02C
	21B	X07A X07B
	Prä	A06A A06B A06C
		A07A A11A
35.F1.41↔		BORP KORP MBOR
		MKOR VAC VAC I
		VAC II VBOR VKOR
	04	E36A E36B
	05	F01A F01C F03A
		F03B F03C F03D
		F04Z F30Z
	06	G12A G16A G33Z
		G38A G38B G38C
	07	H33Z
	11	L33Z
	15	P02A P02B P02C
	21B	X07A X07B
	Prä	A06A A06B A06C
		A07A
35.F1.42↔		BORP KORP MBOR
		MKOR VAC VAC I
		VAC II VBOR VKOR
	04	E36A E36B
	05	F01A F01C F03A
		F03B F03C F03D
		F04Z F30Z
	06	G12A G16A G33Z
		G38A G38B G38C
	07	H33Z
	11	L33Z
	15	P02A P02B P02C
	21B	X07A X07B
	Prä	A06A A06B A06C
		A07A
35.F1.43↔		BORP KORP MBOR
		MKOR VAC VAC I
		VAC II VBOR VKOR
	04	E36A E36B
	05	F01A F01C F98A
		F98B F98C F98D
	06	G12A G16A G38A
		G38B
	Prä	A06A A06B A06C
		A07A A11A
35.F1.44↔		BORP KORP MBOR
		MKOR VAC VAC I
		VAC II VBOR VKOR
	04	E36A E36B
	05	F01A F01C F98A
		F98B F98C F98D
	06	G12A G16A G33Z
		G38A G38B G38C
	07	H33Z
	11	L33Z
	15	P02A P02B P02C
	21B	X07A X07B
	Prä	A06A A06B A06C
		A07A A11A
35.F1.45↔		BORP KORP MBOR
		MKOR VAC VAC I
		VAC II VBOR VKOR
	04	E36A E36B
	05	F01A F01C F98A
		F98B F98C F98D
	06	G12A G16A G33Z
		G38A G38B G38C
	07	H33Z
	11	L33Z
	15	P02A P02B P02C
	21B	X07A X07B
	Prä	A06A A06B A06C
		A07A A11A
35.F1.51↔		BORP KORP MBOR
		MKOR VAC VAC I
		VAC II VBOR VKOR
	04	E36A E36B
	05	F01A F01C F03A
		F03B F03C F03D
		F03E F04Z F30Z
	06	G12A G16A G33Z
		G38A G38B G38C
	07	H33Z
	11	L33Z
	15	P02A P02B P02C
	21B	X07A X07B
	Prä	A06A A06B A06C
		A07A
35.F1.52↔		BORP KORP MBOR
		MKOR VAC VAC I
		VAC II VBOR VKOR
	04	E36A E36B
	05	F01A F01C F03A
		F03B F03C F03D
		F03E F04Z F30Z
	06	G12A G16A G33Z
		G38A G38B G38C
	07	H33Z
	11	L33Z
	15	P02A P02B P02C
	21B	X07A X07B
	Prä	A06A A06B A06C
		A07A
35.F1.61↔		BORP KORP MBOR
		MKOR VAC VAC I
		VAC II VBOR VKOR
	04	E36A E36B
	05	F01A F01C F03A
		F03B F03C F03D
		F03E F04Z F30Z
	06	G12A G16A G33Z
		G38A G38B G38C
	07	H33Z
	11	L33Z
	15	P02A P02B P02C
	21B	X07A X07B
	Prä	A06A A06B A06C
		A07A
35.F1.62↔		BORP KORP MBOR
		MKOR VAC VAC I
		VAC II VBOR VKOR
	04	E36A E36B
	05	F01A F01C F03A
		F03B F03C F03D
		F03E F04Z F30Z
	06	G12A G16A G33Z
		G38A G38B G38C
	07	H33Z
	11	L33Z
	15	P02A P02B P02C
	21B	X07A X07B
	Prä	A06A A06B A06C
		A07A
35.F1.71↔		BORP KORP MBOR
		MKOR VAC VAC I
		VAC II VBOR VKOR
	04	E36A E36B
	05	F01A F01C F03A
		F03B F03C F03D
		F04Z F30Z
	06	G12A G16A G33Z
		G38A G38B G38C
	07	H33Z
	11	L33Z
	15	P02A P02B P02C
	21B	X07A X07B
	Prä	A06A A06B A06C
		A07A
35.F1.72↔		BORP KORP MBOR
		MKOR VAC VAC I
		VAC II VBOR VKOR
	04	E36A E36B
	05	F01A F01C F03A
		F03B F03C F03D
		F03E F04Z F30Z
	06	G12A G16A G33Z
		G38A G38B G38C
	07	H33Z
	11	L33Z
	15	P02A P02B P02C
	21B	X07A X07B
	Prä	A06A A06B A06C
		A07A
35.F1.81↔		BORP KORP MBOR
		MKOR VAC VAC I
		VAC II VBOR VKOR
	04	E36A E36B
	05	F01A F01C F03A
		F03B F03C F03D
		F03E F04Z F30Z
	06	G12A G16A G33Z
		G38A G38B G38C
	07	H33Z
	11	L33Z
	15	P02A P02B P02C
	21B	X07A X07B

PROC

PROC

CHOP	MDC	DRG
	Prä	A06A A06B A06C A07A
35.F1.82↔		BORP KORP MBOR MKOR VAC VAC I VAC II VBOR VKOR
	04	E36A E36B
	05	F01A F01C F03A F03B F03C F03D F03E F04Z F30Z
	06	G12A G16A G33Z G38A G38B G38C
	07	H33Z
	11	L33Z
	15	P02A P02B P02C
	21B	X07A X07B
	Prä	A06A A06B A06C A07A
35.F1.A2↔		BORP KORP MBOR MKOR VAC VAC I VAC II VBOR VKOR
	04	E36A E36B
	05	F01A F01C F03A F03B F03C F03D F04Z F30Z
	06	G12A G16A G33Z G38A G38B G38C
	07	H33Z
	11	L33Z
	15	P02A P02B P02C
	21B	X07A X07B
	Prä	A06A A06B A06C A07A
35.F1.B2↔		BORP KORP MBOR MKOR VAC VAC I VAC II VBOR VKOR
	04	E36A E36B
	05	F01A F01C F03A F03B F03C F03D F04Z F30Z
	06	G12A G16A G33Z G38A G38B G38C
	07	H33Z
	11	L33Z
	15	P02A P02B P02C
	21B	X07A X07B
	Prä	A06A A06B A06C A07A
35.F2.00↔		BORP KORP MBOR MKOR VAC VAC I VAC II VBOR VKOR
	04	E36A E36B
	05	F01A F01C F03A F03B F03C F03D F03E F04Z F30Z
	06	G12A G16A G33Z G38A G38B G38C
	07	H33Z
	11	L33Z
	15	P02A P02B P02C
	21B	X07A X07B
	Prä	A06A A06B A06C A07A
35.F2.09↔		BORP KORP MBOR MKOR VAC VAC I VAC II VBOR VKOR
	04	E36A E36B
	05	F01A F01C F03A F03B F03C F03D F03E F04Z F30Z
	06	G12A G16A G33Z G38A G38B G38C
	07	H33Z
	11	L33Z
	15	P02A P02B P02C
	21B	X07A X07B
	Prä	A06A A06B A06C A07A
35.F2.11↔		BORP KORP MBOR MKOR VAC VAC I VAC II VBOR VKOR
	04	E36A E36B
	05	F01A F01C F03A F03B F03C F03D F03E F04Z F30Z
	06	G12A G16A G33Z G38A G38B G38C
	07	H33Z
	11	L33Z
	15	P02A P02B P02C
	21B	X07A X07B
	Prä	A06A A06B A06C A07A
35.F2.12↔		BORP KORP MBOR MKOR VAC VAC I VAC II VBOR VKOR
	04	E36A E36B
	05	F01A F01C F03A F03B F03C F03D F03E F04Z F30Z
	06	G12A G16A G33Z G38A G38B G38C
	07	H33Z
	11	L33Z
	15	P02A P02B P02C
	21B	X07A X07B
	Prä	A06A A06B A06C A07A
35.F2.21↔		BORP KORP MBOR MKOR VAC VAC I VAC II VBOR VKOR
	04	E36A E36B
	05	F01A F01C F03A F03B F03C F03D F03E F04Z F30Z
	06	G12A G16A G33Z G38A G38B G38C
	07	H33Z
	11	L33Z
	15	P02A P02B P02C
	21B	X07A X07B
	Prä	A06A A06B A06C A07A
35.F2.22↔		BORP KORP MBOR MKOR VAC VAC I VAC II VBOR VKOR
	04	E36A E36B
	05	F01A F01C F03A F03B F03C F03D F04Z F30Z
	06	G12A G16A G33Z G38A G38B G38C
	07	H33Z
	11	L33Z
	15	P02A P02B P02C
	21B	X07A X07B
	Prä	A06A A06B A06C A07A
35.F2.23↔		BORP KORP MBOR MKOR VAC VAC I VAC II VBOR VKOR
	04	E36A E36B
	05	F01A F01C F98A F98B F98C F98D
	06	G12A G16A G38A G38B
	Prä	A06A A06B A06C A07A A11A
35.F2.24↔		BORP KORP MBOR MKOR VAC VAC I VAC II VBOR VKOR
	04	E36A E36B
	05	F01A F01C F98A F98B F98C
	06	G12A G16A G38A G38B
	Prä	A06A A06B A06C A07A A11A
35.F2.25↔		BORP KORP MBOR MKOR VAC VAC I VAC II VBOR VKOR
	04	E36A E36B
	05	F01A F01C F98A F98B F98C
	06	G12A G16A G38A G38B
	Prä	A06A A06B A06C A07A A11A
35.F2.26↔		BORP KORP MBOR MKOR VAC VAC I VAC II VBOR VKOR
	04	E36A E36B
	05	F01A F01C F98A F98B F98C
	06	G12A G16A G38A G38B
	Prä	A06A A06B A06C A07A A11A
35.F2.31↔		BORP KORP MBOR MKOR VAC VAC I VAC II VBOR VKOR
	04	E36A E36B
	05	F01A F01C F03A F03B F03C F03D F03E F04Z F30Z
	06	G12A G16A G33Z G38A G38B G38C
	07	H33Z
	11	L33Z
	15	P02A P02B P02C
	21B	X07A X07B
	Prä	A06A A06B A06C A07A
35.F2.32↔		BORP KORP MBOR MKOR VAC VAC I VAC II VBOR VKOR
	04	E36A E36B
	05	F01A F01C F03A F03B F03C F03D F03E F04Z F30Z
	06	G12A G16A G33Z G38A G38B G38C
	07	H33Z
	11	L33Z
	15	P02A P02B P02C
	21B	X07A X07B
	Prä	A06A A06B A06C A07A
35.F2.33↔		BORP KORP MBOR MKOR VAC VAC I VAC II VBOR VKOR

CHOP	MDC	DRG
	04	E36A E36B
	05	F01A F01C F98A F98B F98C
	06	G12A G16A G38A G38B
	Prä	A06A A06B A06C A07A A11A
35.F2.34↔		BORP KORP MBOR MKOR VAC VAC I VAC II VBOR VKOR
	04	E36A E36B
	05	F01A F01C F98A F98B F98C
	06	G12A G16A G38A G38B
	Prä	A06A A06B A06C A07A A11A
35.F2.51↔		BORP KORP MBOR MKOR VAC VAC I VAC II VBOR VKOR
	04	E36A E36B
	05	F01A F01C F03A F03B F03C F03D F03E F04Z F30Z
	06	G12A G16A G33Z G38A G38B G38C
	07	H33Z
	11	L33Z
	15	P02A P02B P02C
	21B	X07A X07B
	Prä	A06A A06B A06C A07A
35.F2.52↔		BORP KORP MBOR MKOR VAC VAC I VAC II VBOR VKOR
	04	E36A E36B
	05	F01A F01C F03A F03B F03C F03D F03E F04Z F30Z
	06	G12A G16A G33Z G38A G38B G38C
	07	H33Z
	11	L33Z
	15	P02A P02B P02C
	21B	X07A X07B
	Prä	A06A A06B A06C A07A
35.F3.00↔		BORP KORP MBOR MKOR VAC VAC I VAC II VBOR VKOR
	04	E36A E36B
	05	F01A F01C F03A F03B F03C F03D F03E F04Z F30Z
	06	G12A G16A G33Z G38A G38B G38C
	07	H33Z
	11	L33Z
	15	P02A P02B P02C
	21B	X07A X07B
	Prä	A06A A06B A06C A07A
35.F3.09↔		BORP KORP MBOR MKOR VAC VAC I VAC II VBOR VKOR
	04	E36A E36B
	05	F01A F01C F03A F03B F03C F03D F03E F04Z F30Z
	06	G12A G16A G33Z G38A G38B G38C
	07	H33Z
	11	L33Z
	15	P02A P02B P02C
	21B	X07A X07B
	Prä	A06A A06B A06C A07A
35.F3.11↔		BORP KORP MBOR MKOR VAC VAC I VAC II VBOR VKOR
	04	E36A E36B
	05	F01A F01C F03A F03B F03C F03D F03E F04Z F30Z
	06	G12A G16A G33Z G38A G38B G38C
	07	H33Z
	11	L33Z
	15	P02A P02B P02C
	21B	X07A X07B
	Prä	A06A A06B A06C A07A
35.F3.12↔		BORP KORP MBOR MKOR VAC VAC I VAC II VBOR VKOR
	04	E36A E36B
	05	F01A F01C F03A F03B F03C F03D F03E F04Z F30Z
	06	G12A G16A G33Z G38A G38B G38C
	07	H33Z
	11	L33Z
	15	P02A P02B P02C
	21B	X07A X07B
	Prä	A06A A06B A06C A07A
35.F3.21↔		BORP KORP MBOR MKOR VAC VAC I VAC II VBOR VKOR
	04	E36A E36B
	05	F01A F01C F03A F03B F03C F03D F03E F04Z F30Z
	06	G12A G16A G33Z G38A G38B G38C
	07	H33Z
	11	L33Z
	15	P02A P02B P02C
	21B	X07A X07B
	Prä	A06A A06B A06C A07A
35.F3.22↔		BORP KORP MBOR MKOR VAC VAC I VAC II VBOR VKOR
	04	E36A E36B
	05	F01A F01C F03A F03B F03C F03D F04Z F30Z
	06	G12A G16A G33Z G38A G38B G38C
	07	H33Z
	11	L33Z
	15	P02A P02B P02C
	21B	X07A X07B
	Prä	A06A A06B A06C A07A
35.F3.23↔		BORP KORP MBOR MKOR VAC VAC I VAC II VBOR VKOR
	04	E36A E36B
	05	F01A F01C F98A F98B F98C F98D
	06	G12A G16A G38A G38B
	Prä	A06A A06B A06C A07A A11A
35.F3.24↔		BORP KORP MBOR MKOR VAC VAC I VAC II VBOR VKOR
	04	E36A E36B
	05	F01A F01C F98A F98B F98C F98D
	06	G12A G16A G38A G38B
	Prä	A06A A06B A06C A07A A11A
35.F3.25↔		BORP KORP MBOR MKOR VAC VAC I VAC II VBOR VKOR
	04	E36A E36B
	05	F01A F01C F98A F98B F98C F98D
	06	G12A G16A G38A G38B
	Prä	A06A A06B A06C A07A A11A
35.F3.31↔		BORP KORP MBOR MKOR VAC VAC I VAC II VBOR VKOR
	04	E36A E36B
	05	F01A F01C F03A F03B F03C F03D F03E F04Z F30Z
	06	G12A G16A G33Z G38A G38B G38C
	07	H33Z
	11	L33Z
	15	P02A P02B P02C
	21B	X07A X07B
	Prä	A06A A06B A06C A07A
35.F3.32↔		BORP KORP MBOR MKOR VAC VAC I VAC II VBOR VKOR
	04	E36A E36B
	05	F01A F01C F03A F03B F03C F03D F03E F04Z F30Z
	06	G12A G16A G33Z G38A G38B G38C
	07	H33Z
	11	L33Z
	15	P02A P02B P02C
	21B	X07A X07B
	Prä	A06A A06B A06C A07A
35.F3.33↔		BORP KORP MBOR MKOR VAC VAC I VAC II VBOR VKOR
	04	E36A E36B
	05	F01A F01C F98A F98B F98C F98D
	06	G12A G16A G38A G38B
	Prä	A06A A06B A06C A07A A11A
35.F3.34↔		BORP KORP MBOR MKOR VAC VAC I VAC II VBOR VKOR

PROC

PROC

CHOP	MDC	DRG
	04	E36A E36B
	05	F01A F01C F98A
		F98B F98C F98D
	06	G12A G16A G38A
		G38B
	Prä	A06A A06B A06C
		A07A A11A
35.F3.35↔		BORP KORP MBOR
		MKOR VAC VAC I
		VAC II VBOR VKOR
	04	E36A E36B
	05	F01A F01C F98A
		F98B F98C F98D
	06	G12A G16A G38A
		G38B
	Prä	A06A A06B A06C
		A07A A11A
35.F3.51↔		BORP KORP MBOR
		MKOR VAC VAC I
		VAC II VBOR VKOR
	04	E36A E36B
	05	F01A F01C F03A
		F03B F03C F03D
		F03E F04Z F30Z
	06	G12A G16A G33Z
		G38A G38B G38C
	07	H33Z
	11	L33Z
	15	P02A P02B P02C
	21B	X07A X07B
	Prä	A06A A06B A06C
		A07A
35.F3.52↔		BORP KORP MBOR
		MKOR VAC VAC I
		VAC II VBOR VKOR
	04	E36A E36B
	05	F01A F01C F03A
		F03B F03C F03D
		F03E F04Z F30Z
	06	G12A G16A G33Z
		G38A G38B G38C
	07	H33Z
	11	L33Z
	15	P02A P02B P02C
	21B	X07A X07B
	Prä	A06A A06B A06C
		A07A
35.F3.61↔		BORP KORP MBOR
		MKOR VAC VAC I
		VAC II VBOR VKOR
	04	E36A E36B
	05	F01A F01C F03A
		F03B F03C F03D
		F03E F04Z F30Z
	06	G12A G16A G33Z
		G38A G38B G38C
	07	H33Z
	11	L33Z
	15	P02A P02B P02C
	21B	X07A X07B
	Prä	A06A A06B A06C
		A07A
35.F3.62↔		BORP KORP MBOR
		MKOR VAC VAC I
		VAC II VBOR VKOR
	04	E36A E36B
	05	F01A F01C F03A
		F03B F03C F03D
		F03E F04Z F30Z
	06	G12A G16A G33Z

CHOP	MDC	DRG
		G38A G38B G38C
	07	H33Z
	11	L33Z
	15	P02A P02B P02C
	21B	X07A X07B
	Prä	A06A A06B A06C
		A07A
35.F3.71↔		BORP KORP MBOR
		MKOR VAC VAC I
		VAC II VBOR VKOR
	04	E36A E36B
	05	F01A F01C F03A
		F03B F03C F03D
		F03E F04Z F30Z
	06	G12A G16A G33Z
		G38A G38B G38C
	07	H33Z
	11	L33Z
	15	P02A P02B P02C
	21B	X07A X07B
	Prä	A06A A06B A06C
		A07A
35.F3.72↔		BORP KORP MBOR
		MKOR VAC VAC I
		VAC II VBOR VKOR
	04	E36A E36B
	05	F01A F01C F03A
		F03B F03C F03D
		F03E F04Z F30Z
	06	G12A G16A G33Z
		G38A G38B G38C
	07	H33Z
	11	L33Z
	15	P02A P02B P02C
	21B	X07A X07B
	Prä	A06A A06B A06C
		A07A
35.F3.81↔		BORP KORP MBOR
		MKOR VAC VAC I
		VAC II VBOR VKOR
	04	E36A E36B
	05	F01A F01C F03A
		F03B F03C F03D
		F03E F04Z F30Z
	06	G12A G16A G33Z
		G38A G38B G38C
	07	H33Z
	11	L33Z
	15	P02A P02B P02C
	21B	X07A X07B
	Prä	A06A A06B A06C
		A07A
35.F3.82↔		BORP KORP MBOR
		MKOR VAC VAC I
		VAC II VBOR VKOR
	04	E36A E36B
	05	F01A F01C F03A
		F03B F03C F03D
		F03E F04Z F30Z
	06	G12A G16A G33Z
		G38A G38B G38C
	07	H33Z
	11	L33Z
	15	P02A P02B P02C
	21B	X07A X07B
	Prä	A06A A06B A06C
		A07A
35.F4.00↔		BORP KORP MBOR
		MKOR VAC VAC I
		VAC II VBOR VKOR

CHOP	MDC	DRG
	04	E36A E36B
	05	F01A F01C F03A
		F03B F03C F03D
		F03E F04Z F30Z
	06	G12A G16A G33Z
		G38A G38B G38C
	07	H33Z
	11	L33Z
	15	P02A P02B P02C
	21B	X07A X07B
	Prä	A06A A06B A06C
		A07A
35.F4.09↔		BORP KORP MBOR
		MKOR VAC VAC I
		VAC II VBOR VKOR
	04	E36A E36B
	05	F01A F01C F03A
		F03B F03C F03D
		F03E F04Z F30Z
	06	G12A G16A G33Z
		G38A G38B G38C
	07	H33Z
	11	L33Z
	15	P02A P02B P02C
	21B	X07A X07B
	Prä	A06A A06B A06C
		A07A
35.F4.11↔		BORP KORP MBOR
		MKOR VAC VAC I
		VAC II VBOR VKOR
	04	E36A E36B
	05	F01A F01C F03A
		F03B F03C F03D
		F03E F04Z F30Z
	06	G12A G16A G33Z
		G38A G38B G38C
	07	H33Z
	11	L33Z
	15	P02A P02B P02C
	21B	X07A X07B
	Prä	A06A A06B A06C
		A07A
35.F4.12↔		BORP KORP MBOR
		MKOR VAC VAC I
		VAC II VBOR VKOR
	04	E36A E36B
	05	F01A F01C F03A
		F03B F03C F03D
		F03E F04Z F30Z
	06	G12A G16A G33Z
		G38A G38B G38C
	07	H33Z
	11	L33Z
	15	P02A P02B P02C
	21B	X07A X07B
	Prä	A06A A06B A06C
		A07A
35.F4.21↔		BORP KORP MBOR
		MKOR VAC VAC I
		VAC II VBOR VKOR
	04	E36A E36B
	05	F01A F01C F03A
		F03B F03C F03D
		F03E F04Z F30Z
	06	G12A G16A G33Z
		G38A G38B G38C
	07	H33Z
	11	L33Z
	15	P02A P02B P02C
	21B	X07A X07B

CHOP	MDC	DRG
	Prä	A06A A06B A06C A07A
35.F4.22↔		BORP KORP MBOR MKOR VAC VAC I VAC II VBOR VKOR
	04	E36A E36B
	05	F01A F01C F03A F03B F03C F03D F04Z F30Z
	06	G12A G16A G33Z G38A G38B G38C
	07	H33Z
	11	L33Z
	15	P02A P02B P02C
	21B	X07A X07B
	Prä	A06A A06B A06C A07A
35.F4.23↔		BORP KORP MBOR MKOR VAC VAC I VAC II VBOR VKOR
	04	E36A E36B
	05	F01A F01C F03A F03B F03C F03D F04Z F30Z F98A F98B F98C
	06	G12A G16A G33Z G38A G38B G38C
	07	H33Z
	11	L33Z
	15	P02A P02B P02C
	21B	X07A X07B
	Prä	A06A A06B A06C A07A
35.F4.24↔		BORP KORP MBOR MKOR VAC VAC I VAC II VBOR VKOR
	04	E36A E36B
	05	F01A F01C F03A F03B F03C F03D F04Z F30Z F98A F98B F98C
	06	G12A G16A G33Z G38A G38B G38C
	07	H33Z
	11	L33Z
	15	P02A P02B P02C
	21B	X07A X07B
	Prä	A06A A06B A06C A07A
35.F4.31↔		BORP KORP MBOR MKOR VAC VAC I VAC II VBOR VKOR
	04	E36A E36B
	05	F01A F01C F03A F03B F03C F03D F03E F04Z F30Z
	06	G12A G16A G33Z G38A G38B G38C
	07	H33Z
	11	L33Z
	15	P02A P02B P02C
	21B	X07A X07B
	Prä	A06A A06B A06C A07A
35.F4.32↔		BORP KORP MBOR MKOR VAC VAC I VAC II VBOR VKOR
	04	E36A E36B
	05	F01A F01C F03A F03B F03C F03D F03E F04Z F30Z
	06	G12A G16A G33Z G38A G38B G38C
	07	H33Z
	11	L33Z
	15	P02A P02B P02C
	21B	X07A X07B
	Prä	A06A A06B A06C A07A
35.F4.33↔		BORP KORP MBOR MKOR VAC VAC I VAC II VBOR VKOR
	04	E36A E36B
	05	F01A F01C F03A F03B F03C F03D F04Z F30Z F98A F98B F98C F98D
	06	G12A G16A G33Z G38A G38B G38C
	07	H33Z
	11	L33Z
	15	P02A P02B P02C
	21B	X07A X07B
	Prä	A06A A06B A06C A07A
35.F4.34↔		BORP KORP MBOR MKOR VAC VAC I VAC II VBOR VKOR
	04	E36A E36B
	05	F01A F01C F03A F03B F03C F03D F04Z F30Z F98A F98B F98C F98D
	06	G12A G16A G33Z G38A G38B G38C
	07	H33Z
	11	L33Z
	15	P02A P02B P02C
	21B	X07A X07B
	Prä	A06A A06B A06C A07A
35.F4.51↔		BORP KORP MBOR MKOR VAC VAC I VAC II VBOR VKOR
	04	E36A E36B
	05	F01A F01C F03A F03B F03C F03D F03E F04Z F30Z
	06	G12A G16A G33Z G38A G38B G38C
	07	H33Z
	11	L33Z
	15	P02A P02B P02C
	21B	X07A X07B
	Prä	A06A A06B A06C A07A
35.F4.52↔		BORP KORP MBOR MKOR VAC VAC I VAC II VBOR VKOR
	04	E36A E36B
	05	F01A F01C F03A F03B F03C F03D F03E F04Z F30Z
	06	G12A G16A G33Z G38A G38B G38C
	07	H33Z
	11	L33Z
	15	P02A P02B P02C
	21B	X07A X07B
	Prä	A06A A06B A06C A07A
35.G0↔		BORP KORP MBOR MKOR VAC VAC I VAC II VBOR VKOR
	04	E36A E36B
	05	F01A F01C F03A F03B F03C F03D F04Z F06A F06B F30Z F31A F31B F31C
	06	G12A G16A G33Z G38A G38B G38C
	07	H33Z
	11	L33Z
	15	P02A P02B P02C
	21B	X07A X07B
	Prä	A06A A06B A06C A07A
35.G1.11↔		BORP KORP MBOR MKOR VAC VAC I VAC II VBOR VKOR
	04	E36A E36B
	05	F01A F01C F03A F03B F03C F03D F04Z F06A F06B F30Z F31A F31B F31C
	06	G12A G16A G33Z G38A G38B G38C
	07	H33Z
	11	L33Z
	15	P02A P02B P02C
	21B	X07A X07B
	Prä	A06A A06B A06C A07A
35.G1.12↔		BORP KORP MBOR MKOR VAC VAC I VAC II VBOR VKOR
	04	E36A E36B
	05	F01A F01C F03A F03B F03C F03D F04Z F06A F06B F30Z F31A F31B F31C
	06	G12A G16A G33Z G38A G38B G38C
	07	H33Z
	11	L33Z
	15	P02A P02B P02C
	21B	X07A X07B
	Prä	A06A A06B A06C A07A
35.G1.13↔		BORP KORP MBOR MKOR VAC VAC I VAC II VBOR VKOR
	04	E36A E36B
	05	F01A F01C F03A F03B F03C F03D F04Z F06A F06B F30Z F31A F31B F31C
	06	G12A G16A G33Z G38A G38B G38C
	07	H33Z
	11	L33Z
	15	P02A P02B P02C
	21B	X07A X07B
	Prä	A06A A06B A06C A07A
35.G1.14↔		BORP KORP MBOR

PROC

PROC

CHOP	MDC	DRG
		MKOR VAC VAC I
		VAC II VBOR VKOR
	04	E36A E36B
	05	F01A F01C F03A
		F03B F03C F03D
		F04Z F06A F06B
		F30Z F31A F31B
		F31C
	06	G12A G16A G33Z
		G38A G38B G38C
	07	H33Z
	11	L33Z
	15	P02A P02B P02C
	21B	X07A X07B
	Prä	A06A A06B A06C
		A07A
35.G2.11↔		BORP KORP MBOR
		MKOR VAC VAC I
		VAC II VBOR VKOR
	04	E36A E36B
	05	F01A F01C F03A
		F03B F03C F03D
		F04Z F06A F06B
		F30Z F31A F31B
		F31C
	06	G12A G16A G33Z
		G38A G38B G38C
	07	H33Z
	11	L33Z
	15	P02A P02B P02C
	21B	X07A X07B
	Prä	A06A A06B A06C
		A07A
35.G2.12↔		BORP KORP MBOR
		MKOR VAC VAC I
		VAC II VBOR VKOR
	04	E36A E36B
	05	F01A F01C F03A
		F03B F03C F03D
		F04Z F06A F06B
		F30Z F31A F31B
		F31C
	06	G12A G16A G33Z
		G38A G38B G38C
	07	H33Z
	11	L33Z
	15	P02A P02B P02C
	21B	X07A X07B
	Prä	A06A A06B A06C
		A07A
35.G2.13↔		BORP KORP MBOR
		MKOR VAC VAC I
		VAC II VBOR VKOR
	04	E36A E36B
	05	F01A F01C F03A
		F03B F03C F03D
		F04Z F06A F06B
		F30Z F31A F31B
		F31C
	06	G12A G16A G33Z
		G38A G38B G38C
	07	H33Z
	11	L33Z
	15	P02A P02B P02C
	21B	X07A X07B
	Prä	A06A A06B A06C
		A07A
35.G2.14↔		BORP KORP MBOR
		MKOR VAC VAC I
		VAC II VBOR VKOR
	04	E36A E36B
	05	F01A F01C F03A
		F03B F03C F03D
		F04Z F06A F06B
		F30Z F31A F31B
		F31C
	06	G12A G16A G33Z
		G38A G38B G38C
	07	H33Z
	11	L33Z
	15	P02A P02B P02C
	21B	X07A X07B
	Prä	A06A A06B A06C
		A07A
35.G3.11↔		BORP KORP MBOR
		MKOR VAC VAC I
		VAC II VBOR VKOR
	04	E36A E36B
	05	F01A F01C F03A
		F03B F03C F03D
		F04Z F06A F06B
		F30Z F31A F31B
		F31C
	06	G12A G16A G33Z
		G38A G38B G38C
	07	H33Z
	11	L33Z
	15	P02A P02B P02C
	21B	X07A X07B
	Prä	A06A A06B A06C
		A07A
35.G3.12↔		BORP KORP MBOR
		MKOR VAC VAC I
		VAC II VBOR VKOR
	04	E36A E36B
	05	F01A F01C F03A
		F03B F03C F03D
		F04Z F06A F06B
		F30Z F31A F31B
		F31C
	06	G12A G16A G33Z
		G38A G38B G38C
	07	H33Z
	11	L33Z
	15	P02A P02B P02C
	21B	X07A X07B
	Prä	A06A A06B A06C
		A07A
35.G3.13↔		BORP KORP MBOR
		MKOR VAC VAC I
		VAC II VBOR VKOR
	04	E36A E36B
	05	F01A F01C F03A
		F03B F03C F03D
		F04Z F06A F06B
		F30Z F31A F31B
		F31C
	06	G12A G16A G33Z
		G38A G38B G38C
	07	H33Z
	11	L33Z
	15	P02A P02B P02C
	21B	X07A X07B
	Prä	A06A A06B A06C
		A07A
35.G3.14↔		BORP KORP MBOR
		MKOR VAC VAC I
		VAC II VBOR VKOR
	04	E36A E36B
	05	F01A F01C F03A
		F03B F03C F03D
		F04Z F06A F06B
		F30Z F31A F31B
		F31C
	06	G12A G16A G33Z
		G38A G38B G38C
	07	H33Z
	11	L33Z
	15	P02A P02B P02C
	21B	X07A X07B
	Prä	A06A A06B A06C
		A07A
35.G4.11↔		BORP KORP MBOR
		MKOR VAC VAC I
		VAC II VBOR VKOR
	04	E36A E36B
	05	F01A F01C F03A
		F03B F03C F03D
		F04Z F06A F06B
		F30Z F31A F31B
		F31C
	06	G12A G16A G33Z
		G38A G38B G38C
	07	H33Z
	11	L33Z
	15	P02A P02B P02C
	21B	X07A X07B
	Prä	A06A A06B A06C
		A07A
35.G4.12↔		BORP KORP MBOR
		MKOR VAC VAC I
		VAC II VBOR VKOR
	04	E36A E36B
	05	F01A F01C F03A
		F03B F03C F03D
		F04Z F06A F06B
		F30Z F31A F31B
		F31C
	06	G12A G16A G33Z
		G38A G38B G38C
	07	H33Z
	11	L33Z
	15	P02A P02B P02C
	21B	X07A X07B
	Prä	A06A A06B A06C
		A07A
35.G4.13↔		BORP KORP MBOR
		MKOR VAC VAC I
		VAC II VBOR VKOR
	04	E36A E36B
	05	F01A F01C F03A
		F03B F03C F03D
		F04Z F06A F06B
		F30Z F31A F31B
		F31C
	06	G12A G16A G33Z
		G38A G38B G38C
	07	H33Z
	11	L33Z
	15	P02A P02B P02C
	21B	X07A X07B
	Prä	A06A A06B A06C
		A07A
35.G4.14↔		BORP KORP MBOR
		MKOR VAC VAC I
		VAC II VBOR VKOR
	04	E36A E36B
	05	F01A F01C F03A
		F03B F03C F03D
		F04Z F06A F06B

CHOP	MDC	DRG
		F30Z F31A F31B
		F31C
	06	G12A G16A G33Z
		G38A G38B G38C
	07	H33Z
	11	L33Z
	15	P02A P02B P02C
	21B	X07A X07B
	Prä	A06A A06B A06C
		A07A
35.G9↔		BORP KORP MBOR
		MKOR VAC VAC I
		VAC II VBOR VKOR
	04	E36A E36B
	05	F01A F01C F03A
		F03B F03C F03D
		F04Z F06A F06B
		F30Z F31A F31B
		F31C
	06	G12A G16A G33Z
		G38A G38B G38C
	07	H33Z
	11	L33Z
	15	P02A P02B P02C
	21B	X07A X07B
	Prä	A06A A06B A06C
		A07A
35.H1.00↔		BORP KORP MBOR
		MKOR VAC VAC I
		VAC II VBOR VKOR
	04	E36A E36B
	05	F01A F01C F03A
		F03B F03C F03D
		F03E F04Z F30Z
	06	G12A G16A G33Z
		G38A G38B G38C
	07	H33Z
	11	L33Z
	15	P02A P02B P02C
	21B	X07A X07B
	Prä	A06A A06B A06C
		A07A
35.H1.09↔		BORP KORP MBOR
		MKOR VAC VAC I
		VAC II VBOR VKOR
	04	E36A E36B
	05	F01A F01C F03A
		F03B F03C F03D
		F03E F04Z F30Z
	06	G12A G16A G33Z
		G38A G38B G38C
	07	H33Z
	11	L33Z
	15	P02A P02B P02C
	21B	X07A X07B
	Prä	A06A A06B A06C
		A07A
35.H1.11↔		BORP KORP MBOR
		MKOR VAC VAC I
		VAC II VBOR VKOR
	04	E36A E36B
	05	F01A F01C F03A
		F03B F03C F03D
		F03E F04Z F30Z
	06	G12A G16A G33Z
		G38A G38B G38C
	07	H33Z
	11	L33Z
	15	P02A P02B P02C
	21B	X07A X07B
	Prä	A06A A06B A06C
		A07A
35.H1.12↔		BORP KORP MBOR
		MKOR VAC VAC I
		VAC II VBOR VKOR
	04	E36A E36B
	05	F01A F01C F03A
		F03B F03C F03D
		F03E F04Z F30Z
	06	G12A G16A G33Z
		G38A G38B G38C
	07	H33Z
	11	L33Z
	15	P02A P02B P02C
	21B	X07A X07B
	Prä	A06A A06B A06C
		A07A
35.H1.21↔		BORP KORP MBOR
		MKOR VAC VAC I
		VAC II VBOR VKOR
	04	E36A E36B
	05	F01A F01C F03A
		F03B F03C F03D
		F03E F04Z F30Z
	06	G12A G16A G33Z
		G38A G38B G38C
	07	H33Z
	11	L33Z
	15	P02A P02B P02C
	21B	X07A X07B
	Prä	A06A A06B A06C
		A07A
35.H1.22↔		BORP KORP MBOR
		MKOR VAC VAC I
		VAC II VBOR VKOR
	04	E36A E36B
	05	F01A F01C F03A
		F03B F03C F03D
		F04Z F30Z
	06	G12A G16A G33Z
		G38A G38B G38C
	07	H33Z
	11	L33Z
	15	P02A P02B P02C
	21B	X07A X07B
	Prä	A06A A06B A06C
		A07A
35.H1.31↔		BORP KORP MBOR
		MKOR VAC VAC I
		VAC II VBOR VKOR
	04	E36A E36B
	05	F01A F01C F03A
		F03B F03C F03D
		F03E F04Z F30Z
	06	G12A G16A G33Z
		G38A G38B G38C
	07	H33Z
	11	L33Z
	15	P02A P02B P02C
	21B	X07A X07B
	Prä	A06A A06B A06C
		A07A
35.H1.32↔		BORP KORP MBOR
		MKOR VAC VAC I
		VAC II VBOR VKOR
	04	E36A E36B
	05	F01A F01C F03A
		F03B F03C F03D
		F03E F04Z F30Z
	06	G12A G16A G33Z
		G38A G38B G38C
	07	H33Z
	11	L33Z
	15	P02A P02B P02C
	21B	X07A X07B
	Prä	A06A A06B A06C
		A07A
35.H1.41↔		BORP KORP MBOR
		MKOR VAC VAC I
		VAC II VBOR VKOR
	04	E36A E36B
	05	F01A F01C F03A
		F03B F03C F03D
		F04Z F30Z
	06	G12A G16A G33Z
		G38A G38B G38C
	07	H33Z
	11	L33Z
	15	P02A P02B P02C
	21B	X07A X07B
	Prä	A06A A06B A06C
		A07A
35.H1.42↔		BORP KORP MBOR
		MKOR VAC VAC I
		VAC II VBOR VKOR
	04	E36A E36B
	05	F01A F01C F03A
		F03B F03C F03D
		F04Z F30Z
	06	G12A G16A G33Z
		G38A G38B G38C
	07	H33Z
	11	L33Z
	15	P02A P02B P02C
	21B	X07A X07B
	Prä	A06A A06B A06C
		A07A
35.H1.51↔		BORP KORP MBOR
		MKOR VAC VAC I
		VAC II VBOR VKOR
	04	E36A E36B
	05	F01A F01C F03A
		F03B F03C F03D
		F03E F04Z F30Z
	06	G12A G16A G33Z
		G38A G38B G38C
	07	H33Z
	11	L33Z
	15	P02A P02B P02C
	21B	X07A X07B
	Prä	A06A A06B A06C
		A07A
35.H1.52↔		BORP KORP MBOR
		MKOR VAC VAC I
		VAC II VBOR VKOR
	04	E36A E36B
	05	F01A F01C F03A
		F03B F03C F03D
		F03E F04Z F30Z
	06	G12A G16A G33Z
		G38A G38B G38C
	07	H33Z
	11	L33Z
	15	P02A P02B P02C
	21B	X07A X07B
	Prä	A06A A06B A06C
		A07A
35.H1.61↔		BORP KORP MBOR
		MKOR VAC VAC I
		VAC II VBOR VKOR

PROC

PROC

CHOP	MDC	DRG
	04	E36A E36B
	05	F01A F01C F03A
		F03B F03C F03D
		F03E F04Z F30Z
	06	G12A G16A G33Z
		G38A G38B G38C
	07	H33Z
	11	L33Z
	15	P02A P02B P02C
	21B	X07A X07B
	Prä	A06A A06B A06C
		A07A
35.H1.62↔		BORP KORP MBOR
		MKOR VAC VAC I
		VAC II VBOR VKOR
	04	E36A E36B
	05	F01A F01C F03A
		F03B F03C F03D
		F03E F04Z F30Z
	06	G12A G16A G33Z
		G38A G38B G38C
	07	H33Z
	11	L33Z
	15	P02A P02B P02C
	21B	X07A X07B
	Prä	A06A A06B A06C
		A07A
35.H1.71↔		BORP KORP MBOR
		MKOR VAC VAC I
		VAC II VBOR VKOR
	04	E36A E36B
	05	F01A F01C F03A
		F03B F03C F03D
		F03E F04Z F30Z
	06	G12A G16A G33Z
		G38A G38B G38C
	07	H33Z
	11	L33Z
	15	P02A P02B P02C
	21B	X07A X07B
	Prä	A06A A06B A06C
		A07A
35.H1.72↔		BORP KORP MBOR
		MKOR VAC VAC I
		VAC II VBOR VKOR
	04	E36A E36B
	05	F01A F01C F03A
		F03B F03C F03D
		F03E F04Z F30Z
	06	G12A G16A G33Z
		G38A G38B G38C
	07	H33Z
	11	L33Z
	15	P02A P02B P02C
	21B	X07A X07B
	Prä	A06A A06B A06C
		A07A
35.H1.81↔		BORP KORP MBOR
		MKOR VAC VAC I
		VAC II VBOR VKOR
	04	E36A E36B
	05	F01A F01C F03A
		F03B F03C F03D
		F03E F04Z F30Z
	06	G12A G16A G33Z
		G38A G38B G38C
	07	H33Z
	11	L33Z
	15	P02A P02B P02C
	21B	X07A X07B
	Prä	A06A A06B A06C
		A07A
35.H1.82↔		BORP KORP MBOR
		MKOR VAC VAC I
		VAC II VBOR VKOR
	04	E36A E36B
	05	F01A F01C F03A
		F03B F03C F03D
		F03E F04Z F30Z
	06	G12A G16A G33Z
		G38A G38B G38C
	07	H33Z
	11	L33Z
	15	P02A P02B P02C
	21B	X07A X07B
	Prä	A06A A06B A06C
		A07A
35.H1.A2↔		BORP KORP MBOR
		MKOR VAC VAC I
		VAC II VBOR VKOR
	04	E36A E36B
	05	F01A F01C F03A
		F03B F03C F03D
		F04Z F30Z
	06	G12A G16A G33Z
		G38A G38B G38C
	07	H33Z
	11	L33Z
	15	P02A P02B P02C
	21B	X07A X07B
	Prä	A06A A06B A06C
		A07A
35.H1.B2↔		BORP KORP MBOR
		MKOR VAC VAC I
		VAC II VBOR VKOR
	04	E36A E36B
	05	F01A F01C F03A
		F03B F03C F03D
		F04Z F30Z
	06	G12A G16A G33Z
		G38A G38B G38C
	07	H33Z
	11	L33Z
	15	P02A P02B P02C
	21B	X07A X07B
	Prä	A06A A06B A06C
		A07A
35.H2.00↔		BORP KORP MBOR
		MKOR VAC VAC I
		VAC II VBOR VKOR
	04	E36A E36B
	05	F01A F01C F03A
		F03B F03C F03D
		F03E F04Z F30Z
	06	G12A G16A G33Z
		G38A G38B G38C
	07	H33Z
	11	L33Z
	15	P02A P02B P02C
	21B	X07A X07B
	Prä	A06A A06B A06C
		A07A
35.H2.09↔		BORP KORP MBOR
		MKOR VAC VAC I
		VAC II VBOR VKOR
	04	E36A E36B
	05	F01A F01C F03A
		F03B F03C F03D
		F03E F04Z F30Z
	06	G12A G16A G33Z
		G38A G38B G38C
	07	H33Z
	11	L33Z
	15	P02A P02B P02C
	21B	X07A X07B
	Prä	A06A A06B A06C
		A07A
35.H2.11↔		BORP KORP MBOR
		MKOR VAC VAC I
		VAC II VBOR VKOR
	04	E36A E36B
	05	F01A F01C F03A
		F03B F03C F03D
		F03E F04Z F30Z
	06	G12A G16A G33Z
		G38A G38B G38C
	07	H33Z
	11	L33Z
	15	P02A P02B P02C
	21B	X07A X07B
	Prä	A06A A06B A06C
		A07A
35.H2.12↔		BORP KORP MBOR
		MKOR VAC VAC I
		VAC II VBOR VKOR
	04	E36A E36B
	05	F01A F01C F03A
		F03B F03C F03D
		F03E F04Z F30Z
	06	G12A G16A G33Z
		G38A G38B G38C
	07	H33Z
	11	L33Z
	15	P02A P02B P02C
	21B	X07A X07B
	Prä	A06A A06B A06C
		A07A
35.H2.21↔		BORP KORP MBOR
		MKOR VAC VAC I
		VAC II VBOR VKOR
	04	E36A E36B
	05	F01A F01C F03A
		F03B F03C F03D
		F03E F04Z F30Z
	06	G12A G16A G33Z
		G38A G38B G38C
	07	H33Z
	11	L33Z
	15	P02A P02B P02C
	21B	X07A X07B
	Prä	A06A A06B A06C
		A07A
35.H2.22↔		BORP KORP MBOR
		MKOR VAC VAC I
		VAC II VBOR VKOR
	04	E36A E36B
	05	F01A F01C F03A
		F03B F03C F03D
		F03E F04Z F30Z
	06	G12A G16A G33Z
		G38A G38B G38C
	07	H33Z
	11	L33Z
	15	P02A P02B P02C
	21B	X07A X07B
	Prä	A06A A06B A06C
		A07A
35.H2.23↔		BORP KORP MBOR
		MKOR VAC VAC I
		VAC II VBOR VKOR

CHOP	MDC	DRG
	04	E36A E36B
	05	F01A F01C F03A F03B F03C F03D F03E F04Z F30Z F98A F98B F98C F98D
	06	G12A G16A G33Z G38A G38B G38C
	07	H33Z
	11	L33Z
	15	P02A P02B P02C
	21B	X07A X07B
	Prä	A06A A06B A06C A07A
35.H2.24↔		BORP KORP MBOR MKOR VAC VAC I VAC II VBOR VKOR
	04	E36A E36B
	05	F01A F01C F03A F03B F03C F03D F03E F04Z F30Z F98A F98B F98C F98D
	06	G12A G16A G33Z G38A G38B G38C
	07	H33Z
	11	L33Z
	15	P02A P02B P02C
	21B	X07A X07B
	Prä	A06A A06B A06C A07A
35.H2.25↔		BORP KORP MBOR MKOR VAC VAC I VAC II VBOR VKOR
	04	E36A E36B
	05	F01A F01C F03A F03B F03C F03D F03E F04Z F30Z F98A F98B F98C F98D
	06	G12A G16A G33Z G38A G38B G38C
	07	H33Z
	11	L33Z
	15	P02A P02B P02C
	21B	X07A X07B
	Prä	A06A A06B A06C A07A
35.H2.26↔		BORP KORP MBOR MKOR VAC VAC I VAC II VBOR VKOR
	04	E36A E36B
	05	F01A F01C F03A F03B F03C F03D F03E F04Z F30Z F98A F98B F98C F98D
	06	G12A G16A G33Z G38A G38B G38C
	07	H33Z
	11	L33Z
	15	P02A P02B P02C
	21B	X07A X07B
	Prä	A06A A06B A06C A07A
35.H2.31↔		BORP KORP MBOR MKOR VAC VAC I VAC II VBOR VKOR
	04	E36A E36B
	05	F01A F01C F03A F03B F03C F03D F03E F04Z F30Z
	06	G12A G16A G33Z G38A G38B G38C
	07	H33Z
	11	L33Z
	15	P02A P02B P02C
	21B	X07A X07B
	Prä	A06A A06B A06C A07A
35.H2.32↔		BORP KORP MBOR MKOR VAC VAC I VAC II VBOR VKOR
	04	E36A E36B
	05	F01A F01C F03A F03B F03C F03D F03E F04Z F30Z
	06	G12A G16A G33Z G38A G38B G38C
	07	H33Z
	11	L33Z
	15	P02A P02B P02C
	21B	X07A X07B
	Prä	A06A A06B A06C A07A
35.H2.33↔		BORP KORP MBOR MKOR VAC VAC I VAC II VBOR VKOR
	04	E36A E36B
	05	F01A F01C F03A F03B F03C F03D F03E F04Z F30Z F98A F98B F98C F98D
	06	G12A G16A G33Z G38A G38B G38C
	07	H33Z
	11	L33Z
	15	P02A P02B P02C
	21B	X07A X07B
	Prä	A06A A06B A06C A07A
35.H2.34↔		BORP KORP MBOR MKOR VAC VAC I VAC II VBOR VKOR
	04	E36A E36B
	05	F01A F01C F03A F03B F03C F03D F03E F04Z F30Z F98A F98B F98C F98D
	06	G12A G16A G33Z G38A G38B G38C
	07	H33Z
	11	L33Z
	15	P02A P02B P02C
	21B	X07A X07B
	Prä	A06A A06B A06C A07A
35.H2.51↔		BORP KORP MBOR MKOR VAC VAC I VAC II VBOR VKOR
	04	E36A E36B
	05	F01A F01C F03A F03B F03C F03D F03E F04Z F30Z
	06	G12A G16A G33Z G38A G38B G38C
	07	H33Z
	11	L33Z
	15	P02A P02B P02C
	21B	X07A X07B
	Prä	A06A A06B A06C A07A
35.H2.52↔		BORP KORP MBOR MKOR VAC VAC I VAC II VBOR VKOR
	04	E36A E36B
	05	F01A F01C F03A F03B F03C F03D F03E F04Z F30Z
	06	G12A G16A G33Z G38A G38B G38C
	07	H33Z
	11	L33Z
	15	P02A P02B P02C
	21B	X07A X07B
	Prä	A06A A06B A06C A07A
35.H3.00↔		BORP KORP MBOR MKOR VAC VAC I VAC II VBOR VKOR
	04	E36A E36B
	05	F01A F01C F03A F03B F03C F03D F03E F04Z F30Z
	06	G12A G16A G33Z G38A G38B G38C
	07	H33Z
	11	L33Z
	15	P02A P02B P02C
	21B	X07A X07B
	Prä	A06A A06B A06C A07A
35.H3.09↔		BORP KORP MBOR MKOR VAC VAC I VAC II VBOR VKOR
	04	E36A E36B
	05	F01A F01C F03A F03B F03C F03D F03E F04Z F30Z
	06	G12A G16A G33Z G38A G38B G38C
	07	H33Z
	11	L33Z
	15	P02A P02B P02C
	21B	X07A X07B
	Prä	A06A A06B A06C A07A
35.H3.11↔		BORP KORP MBOR MKOR VAC VAC I VAC II VBOR VKOR
	04	E36A E36B
	05	F01A F01C F03A F03B F03C F03D F03E F04Z F30Z
	06	G12A G16A G33Z G38A G38B G38C
	07	H33Z
	11	L33Z
	15	P02A P02B P02C
	21B	X07A X07B
	Prä	A06A A06B A06C A07A
35.H3.12↔		BORP KORP MBOR MKOR VAC VAC I VAC II VBOR VKOR
	04	E36A E36B
	05	F01A F01C F03A F03B F03C F03D

PROC

PROC

CHOP	MDC	DRG
		F03E F04Z F30Z
	06	G12A G16A G33Z
		G38A G38B G38C
	07	H33Z
	11	L33Z
	15	P02A P02B P02C
	21B	X07A X07B
	Prä	A06A A06B A06C
		A07A
35.H3.21↔		BORP KORP MBOR
		MKOR VAC VAC I
		VAC II VBOR VKOR
	04	E36A E36B
	05	F01A F01C F03A
		F03B F03C F03D
		F03E F04Z F30Z
	06	G12A G16A G33Z
		G38A G38B G38C
	07	H33Z
	11	L33Z
	15	P02A P02B P02C
	21B	X07A X07B
	Prä	A06A A06B A06C
		A07A
35.H3.22↔		BORP KORP MBOR
		MKOR VAC VAC I
		VAC II VBOR VKOR
	04	E36A E36B
	05	F01A F01C F03A
		F03B F03C F03D
		F03E F04Z F30Z
	06	G12A G16A G33Z
		G38A G38B G38C
	07	H33Z
	11	L33Z
	15	P02A P02B P02C
	21B	X07A X07B
	Prä	A06A A06B A06C
		A07A
35.H3.31↔		BORP KORP MBOR
		MKOR VAC VAC I
		VAC II VBOR VKOR
	04	E36A E36B
	05	F01A F01C F03A
		F03B F03C F03D
		F03E F04Z F30Z
	06	G12A G16A G33Z
		G38A G38B G38C
	07	H33Z
	11	L33Z
	15	P02A P02B P02C
	21B	X07A X07B
	Prä	A06A A06B A06C
		A07A
35.H3.32↔		BORP KORP MBOR
		MKOR VAC VAC I
		VAC II VBOR VKOR
	04	E36A E36B
	05	F01A F01C F03A
		F03B F03C F03D
		F03E F04Z F30Z
	06	G12A G16A G33Z
		G38A G38B G38C
	07	H33Z
	11	L33Z
	15	P02A P02B P02C
	21B	X07A X07B
	Prä	A06A A06B A06C
		A07A
35.H3.51↔		BORP KORP MBOR
		MKOR VAC VAC I
		VAC II VBOR VKOR
	04	E36A E36B
	05	F01A F01C F03A
		F03B F03C F03D
		F03E F04Z F30Z
	06	G12A G16A G33Z
		G38A G38B G38C
	07	H33Z
	11	L33Z
	15	P02A P02B P02C
	21B	X07A X07B
	Prä	A06A A06B A06C
		A07A
35.H3.52↔		BORP KORP MBOR
		MKOR VAC VAC I
		VAC II VBOR VKOR
	04	E36A E36B
	05	F01A F01C F03A
		F03B F03C F03D
		F03E F04Z F30Z
	06	G12A G16A G33Z
		G38A G38B G38C
	07	H33Z
	11	L33Z
	15	P02A P02B P02C
	21B	X07A X07B
	Prä	A06A A06B A06C
		A07A
35.H3.61↔		BORP KORP MBOR
		MKOR VAC VAC I
		VAC II VBOR VKOR
	04	E36A E36B
	05	F01A F01C F03A
		F03B F03C F03D
		F03E F04Z F30Z
	06	G12A G16A G33Z
		G38A G38B G38C
	07	H33Z
	11	L33Z
	15	P02A P02B P02C
	21B	X07A X07B
	Prä	A06A A06B A06C
		A07A
35.H3.62↔		BORP KORP MBOR
		MKOR VAC VAC I
		VAC II VBOR VKOR
	04	E36A E36B
	05	F01A F01C F03A
		F03B F03C F03D
		F03E F04Z F30Z
	06	G12A G16A G33Z
		G38A G38B G38C
	07	H33Z
	11	L33Z
	15	P02A P02B P02C
	21B	X07A X07B
	Prä	A06A A06B A06C
		A07A
35.H3.71↔		BORP KORP MBOR
		MKOR VAC VAC I
		VAC II VBOR VKOR
	04	E36A E36B
	05	F01A F01C F03A
		F03B F03C F03D
		F03E F04Z F30Z
	06	G12A G16A G33Z
		G38A G38B G38C
	07	H33Z
	11	L33Z
	15	P02A P02B P02C
	21B	X07A X07B
	Prä	A06A A06B A06C
		A07A
35.H3.72↔		BORP KORP MBOR
		MKOR VAC VAC I
		VAC II VBOR VKOR
	04	E36A E36B
	05	F01A F01C F03A
		F03B F03C F03D
		F03E F04Z F30Z
	06	G12A G16A G33Z
		G38A G38B G38C
	07	H33Z
	11	L33Z
	15	P02A P02B P02C
	21B	X07A X07B
	Prä	A06A A06B A06C
		A07A
35.H3.81↔		BORP KORP MBOR
		MKOR VAC VAC I
		VAC II VBOR VKOR
	04	E36A E36B
	05	F01A F01C F03A
		F03B F03C F03D
		F03E F04Z F30Z
	06	G12A G16A G33Z
		G38A G38B G38C
	07	H33Z
	11	L33Z
	15	P02A P02B P02C
	21B	X07A X07B
	Prä	A06A A06B A06C
		A07A
35.H3.82↔		BORP KORP MBOR
		MKOR VAC VAC I
		VAC II VBOR VKOR
	04	E36A E36B
	05	F01A F01C F03A
		F03B F03C F03D
		F03E F04Z F30Z
	06	G12A G16A G33Z
		G38A G38B G38C
	07	H33Z
	11	L33Z
	15	P02A P02B P02C
	21B	X07A X07B
	Prä	A06A A06B A06C
		A07A
35.H4.00↔		BORP KORP MBOR
		MKOR VAC VAC I
		VAC II VBOR VKOR
	04	E36A E36B
	05	F01A F01C F03A
		F03B F03C F03D
		F03E F04Z F30Z
	06	G12A G16A G33Z
		G38A G38B G38C
	07	H33Z
	11	L33Z
	15	P02A P02B P02C
	21B	X07A X07B
	Prä	A06A A06B A06C
		A07A
35.H4.09↔		BORP KORP MBOR
		MKOR VAC VAC I
		VAC II VBOR VKOR
	04	E36A E36B
	05	F01A F01C F03A
		F03B F03C F03D

CHOP	MDC	DRG
		F03E F04Z F30Z
	06	G12A G16A G33Z
		G38A G38B G38C
	07	H33Z
	11	L33Z
	15	P02A P02B P02C
	21B	X07A X07B
	Prä	A06A A06B A06C
		A07A
35.H4.11↔		BORP KORP MBOR
		MKOR VAC VAC I
		VAC II VBOR VKOR
	04	E36A E36B
	05	F01A F01C F03A
		F03B F03C F03D
		F03E F04Z F30Z
	06	G12A G16A G33Z
		G38A G38B G38C
	07	H33Z
	11	L33Z
	15	P02A P02B P02C
	21B	X07A X07B
	Prä	A06A A06B A06C
		A07A
35.H4.12↔		BORP KORP MBOR
		MKOR VAC VAC I
		VAC II VBOR VKOR
	04	E36A E36B
	05	F01A F01C F03A
		F03B F03C F03D
		F03E F04Z F30Z
	06	G12A G16A G33Z
		G38A G38B G38C
	07	H33Z
	11	L33Z
	15	P02A P02B P02C
	21B	X07A X07B
	Prä	A06A A06B A06C
		A07A
35.H4.21↔		BORP KORP MBOR
		MKOR VAC VAC I
		VAC II VBOR VKOR
	04	E36A E36B
	05	F01A F01C F03A
		F03B F03C F03D
		F03E F04Z F30Z
	06	G12A G16A G33Z
		G38A G38B G38C
	07	H33Z
	11	L33Z
	15	P02A P02B P02C
	21B	X07A X07B
	Prä	A06A A06B A06C
		A07A
35.H4.22↔		BORP KORP MBOR
		MKOR VAC VAC I
		VAC II VBOR VKOR
	04	E36A E36B
	05	F01A F01C F03A
		F03B F03C F03D
		F03E F04Z F30Z
	06	G12A G16A G33Z
		G38A G38B G38C
	07	H33Z
	11	L33Z
	15	P02A P02B P02C
	21B	X07A X07B
	Prä	A06A A06B A06C
		A07A
35.H4.23↔		BORP KORP MBOR
		MKOR VAC VAC I
		VAC II VBOR VKOR
	04	E36A E36B
	05	F01A F01C F03A
		F03B F03C F03D
		F03E F04Z F30Z
		F98A F98B F98C
		F98D
	06	G12A G16A G33Z
		G38A G38B G38C
	07	H33Z
	11	L33Z
	15	P02A P02B P02C
	21B	X07A X07B
	Prä	A06A A06B A06C
		A07A
35.H4.31↔		BORP KORP MBOR
		MKOR VAC VAC I
		VAC II VBOR VKOR
	04	E36A E36B
	05	F01A F01C F03A
		F03B F03C F03D
		F03E F04Z F30Z
	06	G12A G16A G33Z
		G38A G38B G38C
	07	H33Z
	11	L33Z
	15	P02A P02B P02C
	21B	X07A X07B
	Prä	A06A A06B A06C
		A07A
35.H4.32↔		BORP KORP MBOR
		MKOR VAC VAC I
		VAC II VBOR VKOR
	04	E36A E36B
	05	F01A F01C F03A
		F03B F03C F03D
		F03E F04Z F30Z
	06	G12A G16A G33Z
		G38A G38B G38C
	07	H33Z
	11	L33Z
	15	P02A P02B P02C
	21B	X07A X07B
	Prä	A06A A06B A06C
		A07A
35.H4.33↔		BORP KORP MBOR
		MKOR VAC VAC I
		VAC II VBOR VKOR
	04	E36A E36B
	05	F01A F01C F03A
		F03B F03C F03D
		F03E F04Z F30Z
		F98A F98B F98C
		F98D
	06	G12A G16A G33Z
		G38A G38B G38C
	07	H33Z
	11	L33Z
	15	P02A P02B P02C
	21B	X07A X07B
	Prä	A06A A06B A06C
		A07A
35.H4.51↔		BORP KORP MBOR
		MKOR VAC VAC I
		VAC II VBOR VKOR
	04	E36A E36B
	05	F01A F01C F03A
		F03B F03C F03D
		F03E F04Z F30Z
	06	G12A G16A G33Z
		G38A G38B G38C
	07	H33Z
	11	L33Z
	15	P02A P02B P02C
	21B	X07A X07B
	Prä	A06A A06B A06C
		A07A
35.H4.52↔		BORP KORP MBOR
		MKOR VAC VAC I
		VAC II VBOR VKOR
	04	E36A E36B
	05	F01A F01C F03A
		F03B F03C F03D
		F03E F04Z F30Z
	06	G12A G16A G33Z
		G38A G38B G38C
	07	H33Z
	11	L33Z
	15	P02A P02B P02C
	21B	X07A X07B
	Prä	A06A A06B A06C
		A07A
35.I1.11↔		BORP KORP MBOR
		MKOR VAC VAC I
		VAC II VBOR VKOR
	04	E36A E36B
	05	F01A F01C F03A
		F03B F03C F03D
		F03E F04Z F30Z
	06	G12A G16A G38A
		G38B
	15	P02A P02B P02C
35.I2.11↔		BORP KORP MBOR
		MKOR VAC VAC I
		VAC II VBOR VKOR
	04	E36A E36B
	05	F01A F01C F03A
		F03B F03C F03D
		F03E F04Z F30Z
	06	G12A G16A G33Z
		G38A G38B G38C
	07	H33Z
	11	L33Z
	15	P02A P02B P02C
	21B	X07A X07B
	Prä	A06A A06B A06C
		A07A
35.I3.11↔		BORP KORP MBOR
		MKOR VAC VAC I
		VAC II VBOR VKOR
	04	E36A E36B
	05	F01A F01C F03A
		F03B F03C F03D
		F03E F04Z F30Z
	06	G12A G16A G33Z
		G38A G38B G38C
	07	H33Z
	11	L33Z
	15	P02A P02B P02C
	21B	X07A X07B
	Prä	A06A A06B A06C
		A07A
35.I3.12↔		BORP KORP MBOR
		MKOR VAC VAC I
		VAC II VBOR VKOR
	04	E36A E36B
	05	F01A F01C F03A
		F03B F03C F03D
		F03E F04Z F30Z

PROC

PROC

CHOP	MDC	DRG
	06	G12A G16A G33Z G38A G38B G38C
	07	H33Z
	11	L33Z
	15	P02A P02B P02C
	21B	X07A X07B
	Prä	A06A A06B A06C A07A
36.03.00↔		BORP KORP MBOR MKOR VAC VAC I VAC II VBOR VKOR
	04	E36A E36B
	05	F01A F01C F03C F03D F04Z F06A F06B F06C F06D F30Z F98A
	06	G12A G16A G33Z G38A G38B G38C
	07	H33Z
	11	L33Z
	15	P02A P02B P02C
	21B	X07A X07B
36.03.09↔		BORP KORP MBOR MKOR VAC VAC I VAC II VBOR VKOR
	04	E36A E36B
	05	F01A F01C F03C F03D F04Z F06A F06B F06C F06D F30Z F98A
	06	G12A G16A G33Z G38A G38B G38C
	07	H33Z
	11	L33Z
	15	P02A P02B P02C
	21B	X07A X07B
36.03.11↔		BORP KORP MBOR MKOR VAC VAC I VAC II VBOR VKOR
	04	E36A E36B
	05	F01A F01C F03C F03D F04Z F06A F06B F06C F06D F30Z F98A
	06	G12A G16A G33Z G38A G38B G38C
	07	H33Z
	11	L33Z
	15	P02A P02B P02C
	21B	X07A X07B
36.03.12↔		BORP KORP MBOR MKOR VAC VAC I VAC II VBOR VKOR
	04	E36A E36B
	05	F01A F01C F03C F03D F04Z F06A F06B F06C F06D F30Z F98A
	06	G12A G16A G33Z G38A G38B G38C
	07	H33Z
	11	L33Z
	15	P02A P02B P02C
	21B	X07A X07B
36.03.21↔		BORP KORP MBOR MKOR VAC VAC I VAC II VBOR VKOR
	04	E36A E36B
	05	F01A F01C F03C F03D F04Z F06A

CHOP	MDC	DRG
		F06B F06C F06D F30Z F98A
	06	G12A G16A G33Z G38A G38B G38C
	07	H33Z
	11	L33Z
	15	P02A P02B P02C
	21B	X07A X07B
36.03.22↔		BORP KORP MBOR MKOR VAC VAC I VAC II VBOR VKOR
	04	E36A E36B
	05	F01A F01C F03C F03D F04Z F06A F06B F06C F06D F30Z F98A
	06	G12A G16A G33Z G38A G38B G38C
	07	H33Z
	11	L33Z
	15	P02A P02B P02C
	21B	X07A X07B
36.03.31↔		BORP KORP MBOR MKOR VAC VAC I VAC II VBOR VKOR
	04	E36A E36B
	05	F01A F01C F03C F03D F04Z F06A F06B F06C F06D F30Z F98A
	06	G12A G16A G33Z G38A G38B G38C
	07	H33Z
	11	L33Z
	15	P02A P02B P02C
	21B	X07A X07B
36.03.32↔		BORP KORP MBOR MKOR VAC VAC I VAC II VBOR VKOR
	04	E36A E36B
	05	F01A F01C F03C F03D F04Z F06A F06B F06C F06D F30Z F98A
	06	G12A G16A G33Z G38A G38B G38C
	07	H33Z
	11	L33Z
	15	P02A P02B P02C
	21B	X07A X07B
36.03.41↔		BORP KORP MBOR MKOR VAC VAC I VAC II VBOR VKOR
	04	E36A E36B
	05	F01A F01C F03C F03D F04Z F06A F06B F06C F06D F30Z F98A
	06	G12A G16A G33Z G38A G38B G38C
	07	H33Z
	11	L33Z
	15	P02A P02B P02C
	21B	X07A X07B
36.03.51↔		BORP KORP MBOR MKOR VAC VAC I VAC II VBOR VKOR
	04	E36A E36B
	05	F01A F01C F03C F03D F04Z F06A

CHOP	MDC	DRG
		F06B F06C F06D F30Z F98A
	06	G12A G16A G33Z G38A G38B G38C
	07	H33Z
	11	L33Z
	15	P02A P02B P02C
	21B	X07A X07B
36.03.52↔		BORP KORP MBOR MKOR VAC VAC I VAC II VBOR VKOR
	04	E36A E36B
	05	F01A F01C F03C F03D F04Z F06A F06B F06C F06D F30Z F98A
	06	G12A G16A G33Z G38A G38B G38C
	07	H33Z
	11	L33Z
	15	P02A P02B P02C
	21B	X07A X07B
36.03.61↔		BORP KORP MBOR MKOR VAC VAC I VAC II VBOR VKOR
	04	E36A E36B
	05	F01A F01C F03C F03D F04Z F06A F06B F06C F06D F30Z F98A
	06	G12A G16A G33Z G38A G38B G38C
	07	H33Z
	11	L33Z
	15	P02A P02B P02C
	21B	X07A X07B
36.03.62↔		BORP KORP MBOR MKOR VAC VAC I VAC II VBOR VKOR
	04	E36A E36B
	05	F01A F01C F03C F03D F04Z F06A F06B F06C F06D F30Z F98A
	06	G12A G16A G33Z G38A G38B G38C
	07	H33Z
	11	L33Z
	15	P02A P02B P02C
	21B	X07A X07B
36.03.71↔		BORP KORP MBOR MKOR VAC VAC I VAC II VBOR VKOR
	04	E36A E36B
	05	F01A F01C F03C F03D F04Z F06A F06B F06C F06D F30Z F98A
	06	G12A G16A G33Z G38A G38B G38C
	07	H33Z
	11	L33Z
	15	P02A P02B P02C
	21B	X07A X07B
36.03.81↔		BORP KORP MBOR MKOR VAC VAC I VAC II VBOR VKOR
	04	E36A E36B
	05	F01A F01C F03C F03D F04Z F06A

CHOP	MDC	DRG
		F06B F06C F06D
		F30Z F98A
	06	G12A G16A G33Z
		G38A G38B G38C
	07	H33Z
	11	L33Z
	15	P02A P02B P02C
	21B	X07A X07B
36.03.82↔		BORP KORP MBOR
		MKOR VAC VAC I
		VAC II VBOR VKOR
	04	E36A E36B
	05	F01A F01C F03C
		F03D F04Z F06A
		F06B F06C F06D
		F30Z F98A
	06	G12A G16A G33Z
		G38A G38B G38C
	07	H33Z
	11	L33Z
	15	P02A P02B P02C
	21B	X07A X07B
36.08.00↔	05	F01A F01C F12A
		F24A F24B F24C
		F24D F50A F50B
36.08.09↔	05	F01A F01C F12A
		F24A F24B F24C
		F24D F50A F50B
36.08.11↔	05	F01A F01C F12A
		F24A F24B F24C
		F24D F50A F50B
36.08.12↔	05	F01A F01C F12A
		F24A F24B F24C
		F24D F50A F50B
36.08.13↔	05	F01A F01C F12A
		F24A F24B F24C
		F24D F50A F50B
36.08.14↔	05	F01A F01C F12A
		F24A F24B F24C
		F24D F50A F50B
36.08.15↔	05	F01A F01C F12A
		F24A F24B F24C
		F24D F50A F50B
36.08.21↔	05	F01A F01C F12A
		F24A F24B F24C
		F24D F50A F50B
36.08.22↔	05	F01A F01C F12A
		F24A F24B F24C
		F24D F50A F50B
36.08.23↔	05	F01A F01C F12A
		F24A F24B F24C
		F24D F50A F50B
36.08.24↔	05	F01A F01C F12A
		F24A F24B F24C
		F24D F50A F50B
36.08.25↔	05	F01A F01C F12A
		F24A F24B F24C
		F24D F50A F50B
36.08.31↔	05	F01A F01C F12A
		F24A F24B F24C
		F24D F50A F50B
36.08.32↔	05	F01A F01C F12A
		F24A F24B F24C
		F24D F50A F50B
36.09↔		BORP MBOR VAC
		VAC I VAC II VBOR
	04	E36A E36B
	05	F01A F01C F24A
		F24B F24C F24D
		F30Z

CHOP	MDC	DRG
	06	G12A G16A G33Z
		G38A G38B G38C
	07	H33Z
	11	L33Z
	15	P02A P02B P02C
	21B	X07A X07B
36.0A↔	05	F01A F01C F12A
		F24A F24B F24C
		F24D F50A F50B
36.10↔		BORP KORP MBOR
		MKOR VAC VAC I
		VAC II VBOR VKOR
	04	E36A E36B
	05	F01A F01C F03C
		F03D F04Z F06A
		F06B F06C F06D
		F30Z F98A
	06	G12A G16A G33Z
		G38A G38B G38C
	07	H33Z
	11	L33Z
	15	P02A P02B P02C
	21B	X07A X07B
36.11.00↔		BORP KORP MBOR
		MKOR VAC VAC I
		VAC II VBOR VKOR
	04	E36A E36B
	05	F01A F01C F03C
		F03D F04Z F06A
		F06B F06C F06D
		F30Z F98A
	06	G12A G16A G33Z
		G38A G38B G38C
	07	H33Z
	11	L33Z
	15	P02A P02B P02C
	21B	X07A X07B
36.11.21↔		BORP KORP MBOR
		MKOR VAC VAC I
		VAC II VBOR VKOR
	04	E36A E36B
	05	F01A F01C F03C
		F03D F04Z F06A
		F06B F06C F06D
		F30Z F98A
	06	G12A G16A G33Z
		G38A G38B G38C
	07	H33Z
	11	L33Z
	15	P02A P02B P02C
	21B	X07A X07B
36.11.22↔		BORP KORP MBOR
		MKOR VAC VAC I
		VAC II VBOR VKOR
	04	E36A E36B
	05	F01A F01C F03C
		F03D F04Z F06A
		F06B F06C F06D
		F30Z F98A
	06	G12A G16A G33Z
		G38A G38B G38C
	07	H33Z
	11	L33Z
	15	P02A P02B P02C
	21B	X07A X07B
36.11.23↔		BORP KORP MBOR
		MKOR VAC VAC I
		VAC II VBOR VKOR
	04	E36A E36B
	05	F01A F01C F03C

CHOP	MDC	DRG
		F03D F04Z F06A
		F06B F06C F06D
		F30Z F98A
	06	G12A G16A G33Z
		G38A G38B G38C
	07	H33Z
	11	L33Z
	15	P02A P02B P02C
	21B	X07A X07B
36.11.24↔		BORP KORP MBOR
		MKOR VAC VAC I
		VAC II VBOR VKOR
	04	E36A E36B
	05	F01A F01C F03C
		F03D F04Z F06A
		F06B F06C F06D
		F30Z F98A
	06	G12A G16A G33Z
		G38A G38B G38C
	07	H33Z
	11	L33Z
	15	P02A P02B P02C
	21B	X07A X07B
36.11.25↔		BORP KORP MBOR
		MKOR VAC VAC I
		VAC II VBOR VKOR
	04	E36A E36B
	05	F01A F01C F03C
		F03D F04Z F06A
		F06B F06C F06D
		F30Z F98A
	06	G12A G16A G33Z
		G38A G38B G38C
	07	H33Z
	11	L33Z
	15	P02A P02B P02C
	21B	X07A X07B
36.11.26↔		BORP KORP MBOR
		MKOR VAC VAC I
		VAC II VBOR VKOR
	04	E36A E36B
	05	F01A F01C F03C
		F03D F04Z F06A
		F06B F06C F06D
		F30Z F98A
	06	G12A G16A G33Z
		G38A G38B G38C
	07	H33Z
	11	L33Z
	15	P02A P02B P02C
	21B	X07A X07B
36.11.27↔		BORP KORP MBOR
		MKOR VAC VAC I
		VAC II VBOR VKOR
	04	E36A E36B
	05	F01A F01C F03C
		F03D F04Z F06A
		F06B F06C F06D
		F30Z F98A
	06	G12A G16A G33Z
		G38A G38B G38C
	07	H33Z
	11	L33Z
	15	P02A P02B P02C
	21B	X07A X07B
36.11.28↔		BORP KORP MBOR
		MKOR VAC VAC I
		VAC II VBOR VKOR
	04	E36A E36B
	05	F01A F01C F03C

PROC

CHOP	MDC	DRG
		F03D F04Z F06A
		F06B F06C F06D
		F30Z F98A
	06	G12A G16A G33Z
		G38A G38B G38C
	07	H33Z
	11	L33Z
	15	P02A P02B P02C
	21B	X07A X07B
36.11.2A↔		BORP KORP MBOR
		MKOR VAC VAC I
		VAC II VBOR VKOR
	04	E36A E36B
	05	F01A F01C F03C
		F03D F04Z F06A
		F06B F06C F06D
		F30Z F98A
	06	G12A G16A G33Z
		G38A G38B G38C
	07	H33Z
	11	L33Z
	15	P02A P02B P02C
	21B	X07A X07B
36.11.31↔		BORP KORP MBOR
		MKOR VAC VAC I
		VAC II VBOR VKOR
	04	E36A E36B
	05	F01A F01C F03C
		F03D F04Z F06A
		F06B F06C F06D
		F30Z F98A
	06	G12A G16A G33Z
		G38A G38B G38C
	07	H33Z
	11	L33Z
	15	P02A P02B P02C
	21B	X07A X07B
36.11.32↔		BORP KORP MBOR
		MKOR VAC VAC I
		VAC II VBOR VKOR
	04	E36A E36B
	05	F01A F01C F03C
		F03D F04Z F06A
		F06B F06C F06D
		F30Z F98A
	06	G12A G16A G33Z
		G38A G38B G38C
	07	H33Z
	11	L33Z
	15	P02A P02B P02C
	21B	X07A X07B
36.11.33↔		BORP KORP MBOR
		MKOR VAC VAC I
		VAC II VBOR VKOR
	04	E36A E36B
	05	F01A F01C F03C
		F03D F04Z F06A
		F06B F06C F06D
		F30Z F98A
	06	G12A G16A G33Z
		G38A G38B G38C
	07	H33Z
	11	L33Z
	15	P02A P02B P02C
	21B	X07A X07B
36.11.34↔		BORP KORP MBOR
		MKOR VAC VAC I
		VAC II VBOR VKOR
	04	E36A E36B
	05	F01A F01C F03C

CHOP	MDC	DRG
		F03D F04Z F06A
		F06B F06C F06D
		F30Z F98A
	06	G12A G16A G33Z
		G38A G38B G38C
	07	H33Z
	11	L33Z
	15	P02A P02B P02C
	21B	X07A X07B
36.11.35↔		BORP KORP MBOR
		MKOR VAC VAC I
		VAC II VBOR VKOR
	04	E36A E36B
	05	F01A F01C F03C
		F03D F04Z F06A
		F06B F06C F06D
		F30Z F98A
	06	G12A G16A G33Z
		G38A G38B G38C
	07	H33Z
	11	L33Z
	15	P02A P02B P02C
	21B	X07A X07B
36.11.36↔		BORP KORP MBOR
		MKOR VAC VAC I
		VAC II VBOR VKOR
	04	E36A E36B
	05	F01A F01C F03C
		F03D F04Z F06A
		F06B F06C F06D
		F30Z F98A
	06	G12A G16A G33Z
		G38A G38B G38C
	07	H33Z
	11	L33Z
	15	P02A P02B P02C
	21B	X07A X07B
36.11.37↔		BORP KORP MBOR
		MKOR VAC VAC I
		VAC II VBOR VKOR
	04	E36A E36B
	05	F01A F01C F03C
		F03D F04Z F06A
		F06B F06C F06D
		F30Z F98A
	06	G12A G16A G33Z
		G38A G38B G38C
	07	H33Z
	11	L33Z
	15	P02A P02B P02C
	21B	X07A X07B
36.11.38↔		BORP KORP MBOR
		MKOR VAC VAC I
		VAC II VBOR VKOR
	04	E36A E36B
	05	F01A F01C F03C
		F03D F04Z F06A
		F06B F06C F06D
		F30Z F98A
	06	G12A G16A G33Z
		G38A G38B G38C
	07	H33Z
	11	L33Z
	15	P02A P02B P02C
	21B	X07A X07B
36.11.3A↔		BORP KORP MBOR
		MKOR VAC VAC I
		VAC II VBOR VKOR
	04	E36A E36B
	05	F01A F01C F03C

CHOP	MDC	DRG
		F03D F04Z F06A
		F06B F06C F06D
		F30Z F98A
	06	G12A G16A G33Z
		G38A G38B G38C
	07	H33Z
	11	L33Z
	15	P02A P02B P02C
	21B	X07A X07B
36.11.99↔		BORP KORP MBOR
		MKOR VAC VAC I
		VAC II VBOR VKOR
	04	E36A E36B
	05	F01A F01C F03C
		F03D F04Z F06A
		F06B F06C F06D
		F30Z F98A
	06	G12A G16A G33Z
		G38A G38B G38C
	07	H33Z
	11	L33Z
	15	P02A P02B P02C
	21B	X07A X07B
36.12.00↔		BORP KORP MBOR
		MKOR VAC VAC I
		VAC II VBOR VKOR
	04	E36A E36B
	05	F01A F01C F03C
		F03D F04Z F06A
		F06B F06C F06D
		F30Z F98A
	06	G12A G16A G33Z
		G38A G38B G38C
	07	H33Z
	11	L33Z
	15	P02A P02B P02C
	21B	X07A X07B
36.12.21↔		BORP KORP MBOR
		MKOR VAC VAC I
		VAC II VBOR VKOR
	04	E36A E36B
	05	F01A F01C F03C
		F03D F04Z F06A
		F06B F06C F06D
		F30Z F98A
	06	G12A G16A G33Z
		G38A G38B G38C
	07	H33Z
	11	L33Z
	15	P02A P02B P02C
	21B	X07A X07B
36.12.22↔		BORP KORP MBOR
		MKOR VAC VAC I
		VAC II VBOR VKOR
	04	E36A E36B
	05	F01A F01C F03C
		F03D F04Z F06A
		F06B F06C F06D
		F30Z F98A
	06	G12A G16A G33Z
		G38A G38B G38C
	07	H33Z
	11	L33Z
	15	P02A P02B P02C
	21B	X07A X07B
36.12.23↔		BORP KORP MBOR
		MKOR VAC VAC I
		VAC II VBOR VKOR
	04	E36A E36B
	05	F01A F01C F03C

CHOP	MDC	DRG
		F03D F04Z F06A F06B F06C F06D F30Z F98A
	06	G12A G16A G33Z G38A G38B G38C
	07	H33Z
	11	L33Z
	15	P02A P02B P02C
	21B	X07A X07B
36.12.24↔		BORP KORP MBOR MKOR VAC VAC I VAC II VBOR VKOR
	04	E36A E36B
	05	F01A F01C F03C F03D F04Z F06A F06B F06C F06D F30Z F98A
	06	G12A G16A G33Z G38A G38B G38C
	07	H33Z
	11	L33Z
	15	P02A P02B P02C
	21B	X07A X07B
36.12.25↔		BORP KORP MBOR MKOR VAC VAC I VAC II VBOR VKOR
	04	E36A E36B
	05	F01A F01C F03C F03D F04Z F06A F06B F06C F06D F30Z F98A
	06	G12A G16A G33Z G38A G38B G38C
	07	H33Z
	11	L33Z
	15	P02A P02B P02C
	21B	X07A X07B
36.12.26↔		BORP KORP MBOR MKOR VAC VAC I VAC II VBOR VKOR
	04	E36A E36B
	05	F01A F01C F03C F03D F04Z F06A F06B F06C F06D F30Z F98A
	06	G12A G16A G33Z G38A G38B G38C
	07	H33Z
	11	L33Z
	15	P02A P02B P02C
	21B	X07A X07B
36.12.27↔		BORP KORP MBOR MKOR VAC VAC I VAC II VBOR VKOR
	04	E36A E36B
	05	F01A F01C F03C F03D F04Z F06A F06B F06C F06D F30Z F98A
	06	G12A G16A G33Z G38A G38B G38C
	07	H33Z
	11	L33Z
	15	P02A P02B P02C
	21B	X07A X07B
36.12.28↔		BORP KORP MBOR MKOR VAC VAC I VAC II VBOR VKOR
	04	E36A E36B
	05	F01A F01C F03C

CHOP	MDC	DRG
		F03D F04Z F06A F06B F06C F06D F30Z F98A
	06	G12A G16A G33Z G38A G38B G38C
	07	H33Z
	11	L33Z
	15	P02A P02B P02C
	21B	X07A X07B
36.12.2A↔		BORP KORP MBOR MKOR VAC VAC I VAC II VBOR VKOR
	04	E36A E36B
	05	F01A F01C F03C F03D F04Z F06A F06B F06C F06D F30Z F98A
	06	G12A G16A G33Z G38A G38B G38C
	07	H33Z
	11	L33Z
	15	P02A P02B P02C
	21B	X07A X07B
36.12.31↔		BORP KORP MBOR MKOR VAC VAC I VAC II VBOR VKOR
	04	E36A E36B
	05	F01A F01C F03C F03D F04Z F06A F06B F06C F06D F30Z F98A
	06	G12A G16A G33Z G38A G38B G38C
	07	H33Z
	11	L33Z
	15	P02A P02B P02C
	21B	X07A X07B
36.12.32↔		BORP KORP MBOR MKOR VAC VAC I VAC II VBOR VKOR
	04	E36A E36B
	05	F01A F01C F03C F03D F04Z F06A F06B F06C F06D F30Z F98A
	06	G12A G16A G33Z G38A G38B G38C
	07	H33Z
	11	L33Z
	15	P02A P02B P02C
	21B	X07A X07B
36.12.33↔		BORP KORP MBOR MKOR VAC VAC I VAC II VBOR VKOR
	04	E36A E36B
	05	F01A F01C F03C F03D F04Z F06A F06B F06C F06D F30Z F98A
	06	G12A G16A G33Z G38A G38B G38C
	07	H33Z
	11	L33Z
	15	P02A P02B P02C
	21B	X07A X07B
36.12.34↔		BORP KORP MBOR MKOR VAC VAC I VAC II VBOR VKOR
	04	E36A E36B
	05	F01A F01C F03C

CHOP	MDC	DRG
		F03D F04Z F06A F06B F06C F06D F30Z F98A
	06	G12A G16A G33Z G38A G38B G38C
	07	H33Z
	11	L33Z
	15	P02A P02B P02C
	21B	X07A X07B
36.12.35↔		BORP KORP MBOR MKOR VAC VAC I VAC II VBOR VKOR
	04	E36A E36B
	05	F01A F01C F03C F03D F04Z F06A F06B F06C F06D F30Z F98A
	06	G12A G16A G33Z G38A G38B G38C
	07	H33Z
	11	L33Z
	15	P02A P02B P02C
	21B	X07A X07B
36.12.36↔		BORP KORP MBOR MKOR VAC VAC I VAC II VBOR VKOR
	04	E36A E36B
	05	F01A F01C F03C F03D F04Z F06A F06B F06C F06D F30Z F98A
	06	G12A G16A G33Z G38A G38B G38C
	07	H33Z
	11	L33Z
	15	P02A P02B P02C
	21B	X07A X07B
36.12.37↔		BORP KORP MBOR MKOR VAC VAC I VAC II VBOR VKOR
	04	E36A E36B
	05	F01A F01C F03C F03D F04Z F06A F06B F06C F06D F30Z F98A
	06	G12A G16A G33Z G38A G38B G38C
	07	H33Z
	11	L33Z
	15	P02A P02B P02C
	21B	X07A X07B
36.12.38↔		BORP KORP MBOR MKOR VAC VAC I VAC II VBOR VKOR
	04	E36A E36B
	05	F01A F01C F03C F03D F04Z F06A F06B F06C F06D F30Z F98A
	06	G12A G16A G33Z G38A G38B G38C
	07	H33Z
	11	L33Z
	15	P02A P02B P02C
	21B	X07A X07B
36.12.3A↔		BORP KORP MBOR MKOR VAC VAC I VAC II VBOR VKOR
	04	E36A E36B
	05	F01A F01C F03C

PROC

CHOP	MDC	DRG
		F03D F04Z F06A F06B F06C F06D F30Z F98A
	06	G12A G16A G33Z G38A G38B G38C
	07	H33Z
	11	L33Z
	15	P02A P02B P02C
	21B	X07A X07B
36.12.99↔		BORP KORP MBOR MKOR VAC VAC I VAC II VBOR VKOR
	04	E36A E36B
	05	F01A F01C F03C F03D F04Z F06A F06B F06C F06D F30Z F98A
	06	G12A G16A G33Z G38A G38B G38C
	07	H33Z
	11	L33Z
	15	P02A P02B P02C
	21B	X07A X07B
36.13.00↔		BORP KORP MBOR MKOR VAC VAC I VAC II VBOR VKOR
	04	E36A E36B
	05	F01A F01C F03C F03D F04Z F06A F06B F06C F06D F30Z F98A
	06	G12A G16A G33Z G38A G38B G38C
	07	H33Z
	11	L33Z
	15	P02A P02B P02C
	21B	X07A X07B
36.13.21↔		BORP KORP MBOR MKOR VAC VAC I VAC II VBOR VKOR
	04	E36A E36B
	05	F01A F01C F03C F03D F04Z F06A F06B F06C F06D F30Z F98A
	06	G12A G16A G33Z G38A G38B G38C
	07	H33Z
	11	L33Z
	15	P02A P02B P02C
	21B	X07A X07B
36.13.22↔		BORP KORP MBOR MKOR VAC VAC I VAC II VBOR VKOR
	04	E36A E36B
	05	F01A F01C F03C F03D F04Z F06A F06B F06C F06D F30Z F98A
	06	G12A G16A G33Z G38A G38B G38C
	07	H33Z
	11	L33Z
	15	P02A P02B P02C
	21B	X07A X07B
36.13.23↔		BORP KORP MBOR MKOR VAC VAC I VAC II VBOR VKOR
	04	E36A E36B
	05	F01A F01C F03C

CHOP	MDC	DRG
		F03D F04Z F06A F06B F06C F06D F30Z F98A
	06	G12A G16A G33Z G38A G38B G38C
	07	H33Z
	11	L33Z
	15	P02A P02B P02C
	21B	X07A X07B
36.13.24↔		BORP KORP MBOR MKOR VAC VAC I VAC II VBOR VKOR
	04	E36A E36B
	05	F01A F01C F03C F03D F04Z F06A F06B F06C F06D F30Z F98A
	06	G12A G16A G33Z G38A G38B G38C
	07	H33Z
	11	L33Z
	15	P02A P02B P02C
	21B	X07A X07B
36.13.25↔		BORP KORP MBOR MKOR VAC VAC I VAC II VBOR VKOR
	04	E36A E36B
	05	F01A F01C F03C F03D F04Z F06A F06B F06C F06D F30Z F98A
	06	G12A G16A G33Z G38A G38B G38C
	07	H33Z
	11	L33Z
	15	P02A P02B P02C
	21B	X07A X07B
36.13.26↔		BORP KORP MBOR MKOR VAC VAC I VAC II VBOR VKOR
	04	E36A E36B
	05	F01A F01C F03C F03D F04Z F06A F06B F06C F06D F30Z F98A
	06	G12A G16A G33Z G38A G38B G38C
	07	H33Z
	11	L33Z
	15	P02A P02B P02C
	21B	X07A X07B
36.13.27↔		BORP KORP MBOR MKOR VAC VAC I VAC II VBOR VKOR
	04	E36A E36B
	05	F01A F01C F03C F03D F04Z F06A F06B F06C F06D F30Z F98A
	06	G12A G16A G33Z G38A G38B G38C
	07	H33Z
	11	L33Z
	15	P02A P02B P02C
	21B	X07A X07B
36.13.28↔		BORP KORP MBOR MKOR VAC VAC I VAC II VBOR VKOR
	04	E36A E36B
	05	F01A F01C F03C

CHOP	MDC	DRG
		F03D F04Z F06A F06B F06C F06D F30Z F98A
	06	G12A G16A G33Z G38A G38B G38C
	07	H33Z
	11	L33Z
	15	P02A P02B P02C
	21B	X07A X07B
36.13.2A↔		BORP KORP MBOR MKOR VAC VAC I VAC II VBOR VKOR
	04	E36A E36B
	05	F01A F01C F03C F03D F04Z F06A F06B F06C F06D F30Z F98A
	06	G12A G16A G33Z G38A G38B G38C
	07	H33Z
	11	L33Z
	15	P02A P02B P02C
	21B	X07A X07B
36.13.31↔		BORP KORP MBOR MKOR VAC VAC I VAC II VBOR VKOR
	04	E36A E36B
	05	F01A F01C F03C F03D F04Z F06A F06B F06C F06D F30Z F98A
	06	G12A G16A G33Z G38A G38B G38C
	07	H33Z
	11	L33Z
	15	P02A P02B P02C
	21B	X07A X07B
36.13.32↔		BORP KORP MBOR MKOR VAC VAC I VAC II VBOR VKOR
	04	E36A E36B
	05	F01A F01C F03C F03D F04Z F06A F06B F06C F06D F30Z F98A
	06	G12A G16A G33Z G38A G38B G38C
	07	H33Z
	11	L33Z
	15	P02A P02B P02C
	21B	X07A X07B
36.13.33↔		BORP KORP MBOR MKOR VAC VAC I VAC II VBOR VKOR
	04	E36A E36B
	05	F01A F01C F03C F03D F04Z F06A F06B F06C F06D F30Z F98A
	06	G12A G16A G33Z G38A G38B G38C
	07	H33Z
	11	L33Z
	15	P02A P02B P02C
	21B	X07A X07B
36.13.34↔		BORP KORP MBOR MKOR VAC VAC I VAC II VBOR VKOR
	04	E36A E36B
	05	F01A F01C F03C

CHOP	MDC	DRG
		F03D F04Z F06A F06B F06C F06D F30Z F98A
	06	G12A G16A G33Z G38A G38B G38C
	07	H33Z
	11	L33Z
	15	P02A P02B P02C
	21B	X07A X07B
36.13.35↔		BORP KORP MBOR MKOR VAC VAC I VAC II VBOR VKOR
	04	E36A E36B
	05	F01A F01C F03C F03D F04Z F06A F06B F06C F06D F30Z F98A
	06	G12A G16A G33Z G38A G38B G38C
	07	H33Z
	11	L33Z
	15	P02A P02B P02C
	21B	X07A X07B
36.13.36↔		BORP KORP MBOR MKOR VAC VAC I VAC II VBOR VKOR
	04	E36A E36B
	05	F01A F01C F03C F03D F04Z F06A F06B F06C F06D F30Z F98A
	06	G12A G16A G33Z G38A G38B G38C
	07	H33Z
	11	L33Z
	15	P02A P02B P02C
	21B	X07A X07B
36.13.37↔		BORP KORP MBOR MKOR VAC VAC I VAC II VBOR VKOR
	04	E36A E36B
	05	F01A F01C F03C F03D F04Z F06A F06B F06C F06D F30Z F98A
	06	G12A G16A G33Z G38A G38B G38C
	07	H33Z
	11	L33Z
	15	P02A P02B P02C
	21B	X07A X07B
36.13.38↔		BORP KORP MBOR MKOR VAC VAC I VAC II VBOR VKOR
	04	E36A E36B
	05	F01A F01C F03C F03D F04Z F06A F06B F06C F06D F30Z F98A
	06	G12A G16A G33Z G38A G38B G38C
	07	H33Z
	11	L33Z
	15	P02A P02B P02C
	21B	X07A X07B
36.13.3A↔		BORP KORP MBOR MKOR VAC VAC I VAC II VBOR VKOR
	04	E36A E36B
	05	F01A F01C F03C

CHOP	MDC	DRG
		F03D F04Z F06A F06B F06C F06D F30Z F98A
	06	G12A G16A G33Z G38A G38B G38C
	07	H33Z
	11	L33Z
	15	P02A P02B P02C
	21B	X07A X07B
36.13.99↔		BORP KORP MBOR MKOR VAC VAC I VAC II VBOR VKOR
	04	E36A E36B
	05	F01A F01C F03C F03D F04Z F06A F06B F06C F06D F30Z F98A
	06	G12A G16A G33Z G38A G38B G38C
	07	H33Z
	11	L33Z
	15	P02A P02B P02C
	21B	X07A X07B
36.18.00↔		BORP KORP MBOR MKOR VAC VAC I VAC II VBOR VKOR
	04	E36A E36B
	05	F01A F01C F03C F03D F04Z F06A F06B F06C F06D F30Z F98A
	06	G12A G16A G33Z G38A G38B G38C
	07	H33Z
	11	L33Z
	15	P02A P02B P02C
	21B	X07A X07B
36.18.11↔		BORP KORP MBOR MKOR VAC VAC I VAC II VBOR VKOR
	04	E36A E36B
	05	F01A F01C F03C F03D F04Z F06A F06B F06C F06D F30Z F98A
	06	G12A G16A G33Z G38A G38B G38C
	07	H33Z
	11	L33Z
	15	P02A P02B P02C
	21B	X07A X07B
36.18.12↔		BORP KORP MBOR MKOR VAC VAC I VAC II VBOR VKOR
	04	E36A E36B
	05	F01A F01C F03C F03D F04Z F06A F06B F06C F06D F30Z F98A
	06	G12A G16A G33Z G38A G38B G38C
	07	H33Z
	11	L33Z
	15	P02A P02B P02C
	21B	X07A X07B
36.18.13↔		BORP KORP MBOR MKOR VAC VAC I VAC II VBOR VKOR
	04	E36A E36B
	05	F01A F01C F03C

CHOP	MDC	DRG
		F03D F04Z F06A F06B F06C F06D F30Z F98A
	06	G12A G16A G33Z G38A G38B G38C
	07	H33Z
	11	L33Z
	15	P02A P02B P02C
	21B	X07A X07B
36.18.14↔		BORP KORP MBOR MKOR VAC VAC I VAC II VBOR VKOR
	04	E36A E36B
	05	F01A F01C F03C F03D F04Z F06A F06B F06C F06D F30Z F98A
	06	G12A G16A G33Z G38A G38B G38C
	07	H33Z
	11	L33Z
	15	P02A P02B P02C
	21B	X07A X07B
36.18.15↔		BORP KORP MBOR MKOR VAC VAC I VAC II VBOR VKOR
	04	E36A E36B
	05	F01A F01C F03C F03D F04Z F06A F06B F06C F06D F30Z F98A
	06	G12A G16A G33Z G38A G38B G38C
	07	H33Z
	11	L33Z
	15	P02A P02B P02C
	21B	X07A X07B
36.18.16↔		BORP KORP MBOR MKOR VAC VAC I VAC II VBOR VKOR
	04	E36A E36B
	05	F01A F01C F03C F03D F04Z F06A F06B F06C F06D F30Z F98A
	06	G12A G16A G33Z G38A G38B G38C
	07	H33Z
	11	L33Z
	15	P02A P02B P02C
	21B	X07A X07B
36.18.17↔		BORP KORP MBOR MKOR VAC VAC I VAC II VBOR VKOR
	04	E36A E36B
	05	F01A F01C F03C F03D F04Z F06A F06B F06C F06D F30Z F98A
	06	G12A G16A G33Z G38A G38B G38C
	07	H33Z
	11	L33Z
	15	P02A P02B P02C
	21B	X07A X07B
36.18.18↔		BORP KORP MBOR MKOR VAC VAC I VAC II VBOR VKOR
	04	E36A E36B
	05	F01A F01C F03C

PROC

CHOP	MDC	DRG
		F03D F04Z F06A F06B F06C F06D F30Z F98A
	06	G12A G16A G33Z G38A G38B G38C
	07	H33Z
	11	L33Z
	15	P02A P02B P02C
	21B	X07A X07B
36.18.1A↔		BORP KORP MBOR MKOR VAC VAC I VAC II VBOR VKOR
	04	E36A E36B
	05	F01A F01C F03C F03D F04Z F06A F06B F06C F06D F30Z F98A
	06	G12A G16A G33Z G38A G38B G38C
	07	H33Z
	11	L33Z
	15	P02A P02B P02C
	21B	X07A X07B
36.18.21↔		BORP KORP MBOR MKOR VAC VAC I VAC II VBOR VKOR
	04	E36A E36B
	05	F01A F01C F03C F03D F04Z F06A F06B F06C F06D F30Z F98A
	06	G12A G16A G33Z G38A G38B G38C
	07	H33Z
	11	L33Z
	15	P02A P02B P02C
	21B	X07A X07B
36.18.22↔		BORP KORP MBOR MKOR VAC VAC I VAC II VBOR VKOR
	04	E36A E36B
	05	F01A F01C F03C F03D F04Z F06A F06B F06C F06D F30Z F98A
	06	G12A G16A G33Z G38A G38B G38C
	07	H33Z
	11	L33Z
	15	P02A P02B P02C
	21B	X07A X07B
36.18.23↔		BORP KORP MBOR MKOR VAC VAC I VAC II VBOR VKOR
	04	E36A E36B
	05	F01A F01C F03C F03D F04Z F06A F06B F06C F06D F30Z F98A
	06	G12A G16A G33Z G38A G38B G38C
	07	H33Z
	11	L33Z
	15	P02A P02B P02C
	21B	X07A X07B
36.18.24↔		BORP KORP MBOR MKOR VAC VAC I VAC II VBOR VKOR
	04	E36A E36B
	05	F01A F01C F03C

CHOP	MDC	DRG
		F03D F04Z F06A F06B F06C F06D F30Z F98A
	06	G12A G16A G33Z G38A G38B G38C
	07	H33Z
	11	L33Z
	15	P02A P02B P02C
	21B	X07A X07B
36.18.25↔		BORP KORP MBOR MKOR VAC VAC I VAC II VBOR VKOR
	04	E36A E36B
	05	F01A F01C F03C F03D F04Z F06A F06B F06C F06D F30Z F98A
	06	G12A G16A G33Z G38A G38B G38C
	07	H33Z
	11	L33Z
	15	P02A P02B P02C
	21B	X07A X07B
36.18.26↔		BORP KORP MBOR MKOR VAC VAC I VAC II VBOR VKOR
	04	E36A E36B
	05	F01A F01C F03C F03D F04Z F06A F06B F06C F06D F30Z F98A
	06	G12A G16A G33Z G38A G38B G38C
	07	H33Z
	11	L33Z
	15	P02A P02B P02C
	21B	X07A X07B
36.18.27↔		BORP KORP MBOR MKOR VAC VAC I VAC II VBOR VKOR
	04	E36A E36B
	05	F01A F01C F03C F03D F04Z F06A F06B F06C F06D F30Z F98A
	06	G12A G16A G33Z G38A G38B G38C
	07	H33Z
	11	L33Z
	15	P02A P02B P02C
	21B	X07A X07B
36.18.28↔		BORP KORP MBOR MKOR VAC VAC I VAC II VBOR VKOR
	04	E36A E36B
	05	F01A F01C F03C F03D F04Z F06A F06B F06C F06D F30Z F98A
	06	G12A G16A G33Z G38A G38B G38C
	07	H33Z
	11	L33Z
	15	P02A P02B P02C
	21B	X07A X07B
36.18.2A↔		BORP KORP MBOR MKOR VAC VAC I VAC II VBOR VKOR
	04	E36A E36B
	05	F01A F01C F03C

CHOP	MDC	DRG
		F03D F04Z F06A F06B F06C F06D F30Z F98A
	06	G12A G16A G33Z G38A G38B G38C
	07	H33Z
	11	L33Z
	15	P02A P02B P02C
	21B	X07A X07B
36.18.99↔		BORP KORP MBOR MKOR VAC VAC I VAC II VBOR VKOR
	04	E36A E36B
	05	F01A F01C F03C F03D F04Z F06A F06B F06C F06D F30Z F98A
	06	G12A G16A G33Z G38A G38B G38C
	07	H33Z
	11	L33Z
	15	P02A P02B P02C
	21B	X07A X07B
36.19↔		BORP KORP MBOR MKOR VAC VAC I VAC II VBOR VKOR
	04	E36A E36B
	05	F01A F01C F03C F03D F04Z F06A F06B F06C F06D F30Z F98A
	06	G12A G16A G33Z G38A G38B G38C
	07	H33Z
	11	L33Z
	15	P02A P02B P02C
	21B	X07A X07B
36.1A.00↔		BORP KORP MBOR MKOR VAC VAC I VAC II VBOR VKOR
	04	E36A E36B
	05	F01A F01C F03C F03D F04Z F06A F06B F06C F06D F30Z F98A
	06	G12A G16A G33Z G38A G38B G38C
	07	H33Z
	11	L33Z
	15	P02A P02B P02C
	21B	X07A X07B
36.1A.11↔		BORP KORP MBOR MKOR VAC VAC I VAC II VBOR VKOR
	04	E36A E36B
	05	F01A F01C F03C F03D F04Z F06A F06B F06C F06D F30Z F98A
	06	G12A G16A G33Z G38A G38B G38C
	07	H33Z
	11	L33Z
	15	P02A P02B P02C
	21B	X07A X07B
36.1A.12↔		BORP KORP MBOR MKOR VAC VAC I VAC II VBOR VKOR
	04	E36A E36B
	05	F01A F01C F03C

CHOP	MDC	DRG
		F03D F04Z F06A F06B F06C F06D F30Z F98A
	06	G12A G16A G33Z G38A G38B G38C
	07	H33Z
	11	L33Z
	15	P02A P02B P02C
	21B	X07A X07B
36.1A.13↔		BORP KORP MBOR MKOR VAC VAC I VAC II VBOR VKOR
	04	E36A E36B
	05	F01A F01C F03C F03D F04Z F06A F06B F06C F06D F30Z F98A
	06	G12A G16A G33Z G38A G38B G38C
	07	H33Z
	11	L33Z
	15	P02A P02B P02C
	21B	X07A X07B
36.1A.14↔		BORP KORP MBOR MKOR VAC VAC I VAC II VBOR VKOR
	04	E36A E36B
	05	F01A F01C F03C F03D F04Z F06A F06B F06C F06D F30Z F98A
	06	G12A G16A G33Z G38A G38B G38C
	07	H33Z
	11	L33Z
	15	P02A P02B P02C
	21B	X07A X07B
36.1A.15↔		BORP KORP MBOR MKOR VAC VAC I VAC II VBOR VKOR
	04	E36A E36B
	05	F01A F01C F03C F03D F04Z F06A F06B F06C F06D F30Z F98A
	06	G12A G16A G33Z G38A G38B G38C
	07	H33Z
	11	L33Z
	15	P02A P02B P02C
	21B	X07A X07B
36.1A.16↔		BORP KORP MBOR MKOR VAC VAC I VAC II VBOR VKOR
	04	E36A E36B
	05	F01A F01C F03C F03D F04Z F06A F06B F06C F06D F30Z F98A
	06	G12A G16A G33Z G38A G38B G38C
	07	H33Z
	11	L33Z
	15	P02A P02B P02C
	21B	X07A X07B
36.1A.17↔		BORP KORP MBOR MKOR VAC VAC I VAC II VBOR VKOR
	04	E36A E36B
	05	F01A F01C F03C

CHOP	MDC	DRG
		F03D F04Z F06A F06B F06C F06D F30Z F98A
	06	G12A G16A G33Z G38A G38B G38C
	07	H33Z
	11	L33Z
	15	P02A P02B P02C
	21B	X07A X07B
36.1A.18↔		BORP KORP MBOR MKOR VAC VAC I VAC II VBOR VKOR
	04	E36A E36B
	05	F01A F01C F03C F03D F04Z F06A F06B F06C F06D F30Z F98A
	06	G12A G16A G33Z G38A G38B G38C
	07	H33Z
	11	L33Z
	15	P02A P02B P02C
	21B	X07A X07B
36.1A.1A↔		BORP KORP MBOR MKOR VAC VAC I VAC II VBOR VKOR
	04	E36A E36B
	05	F01A F01C F03C F03D F04Z F06A F06B F06C F06D F30Z F98A
	06	G12A G16A G33Z G38A G38B G38C
	07	H33Z
	11	L33Z
	15	P02A P02B P02C
	21B	X07A X07B
36.1A.21↔		BORP KORP MBOR MKOR VAC VAC I VAC II VBOR VKOR
	04	E36A E36B
	05	F01A F01C F03C F03D F04Z F06A F06B F06C F06D F30Z F98A
	06	G12A G16A G33Z G38A G38B G38C
	07	H33Z
	11	L33Z
	15	P02A P02B P02C
	21B	X07A X07B
36.1A.22↔		BORP KORP MBOR MKOR VAC VAC I VAC II VBOR VKOR
	04	E36A E36B
	05	F01A F01C F03C F03D F04Z F06A F06B F06C F06D F30Z F98A
	06	G12A G16A G33Z G38A G38B G38C
	07	H33Z
	11	L33Z
	15	P02A P02B P02C
	21B	X07A X07B
36.1A.23↔		BORP KORP MBOR MKOR VAC VAC I VAC II VBOR VKOR
	04	E36A E36B
	05	F01A F01C F03C

CHOP	MDC	DRG
		F03D F04Z F06A F06B F06C F06D F30Z F98A
	06	G12A G16A G33Z G38A G38B G38C
	07	H33Z
	11	L33Z
	15	P02A P02B P02C
	21B	X07A X07B
36.1A.24↔		BORP KORP MBOR MKOR VAC VAC I VAC II VBOR VKOR
	04	E36A E36B
	05	F01A F01C F03C F03D F04Z F06A F06B F06C F06D F30Z F98A
	06	G12A G16A G33Z G38A G38B G38C
	07	H33Z
	11	L33Z
	15	P02A P02B P02C
	21B	X07A X07B
36.1A.25↔		BORP KORP MBOR MKOR VAC VAC I VAC II VBOR VKOR
	04	E36A E36B
	05	F01A F01C F03C F03D F04Z F06A F06B F06C F06D F30Z F98A
	06	G12A G16A G33Z G38A G38B G38C
	07	H33Z
	11	L33Z
	15	P02A P02B P02C
	21B	X07A X07B
36.1A.26↔		BORP KORP MBOR MKOR VAC VAC I VAC II VBOR VKOR
	04	E36A E36B
	05	F01A F01C F03C F03D F04Z F06A F06B F06C F06D F30Z F98A
	06	G12A G16A G33Z G38A G38B G38C
	07	H33Z
	11	L33Z
	15	P02A P02B P02C
	21B	X07A X07B
36.1A.27↔		BORP KORP MBOR MKOR VAC VAC I VAC II VBOR VKOR
	04	E36A E36B
	05	F01A F01C F03C F03D F04Z F06A F06B F06C F06D F30Z F98A
	06	G12A G16A G33Z G38A G38B G38C
	07	H33Z
	11	L33Z
	15	P02A P02B P02C
	21B	X07A X07B
36.1A.28↔		BORP KORP MBOR MKOR VAC VAC I VAC II VBOR VKOR
	04	E36A E36B
	05	F01A F01C F03C

PROC

CHOP	MDC	DRG
		F03D F04Z F06A F06B F06C F06D F30Z F98A
	06	G12A G16A G33Z G38A G38B G38C
	07	H33Z
	11	L33Z
	15	P02A P02B P02C
	21B	X07A X07B
36.1A.2A↔		BORP KORP MBOR MKOR VAC VAC I VAC II VBOR VKOR
	04	E36A E36B
	05	F01A F01C F03C F03D F04Z F06A F06B F06C F06D F30Z F98A
	06	G12A G16A G33Z G38A G38B G38C
	07	H33Z
	11	L33Z
	15	P02A P02B P02C
	21B	X07A X07B
36.1A.99↔		BORP KORP MBOR MKOR VAC VAC I VAC II VBOR VKOR
	04	E36A E36B
	05	F01A F01C F03C F03D F04Z F06A F06B F06C F06D F30Z F98A
	06	G12A G16A G33Z G38A G38B G38C
	07	H33Z
	11	L33Z
	15	P02A P02B P02C
	21B	X07A X07B
36.1B.00↔		BORP KORP MBOR MKOR VAC VAC I VAC II VBOR VKOR
	04	E36A E36B
	05	F01A F01C F03C F03D F04Z F06A F06B F06C F06D F30Z F98A
	06	G12A G16A G33Z G38A G38B G38C
	07	H33Z
	11	L33Z
	15	P02A P02B P02C
	21B	X07A X07B
36.1B.11↔		BORP KORP MBOR MKOR VAC VAC I VAC II VBOR VKOR
	04	E36A E36B
	05	F01A F01C F03C F03D F04Z F06A F06B F06C F06D F30Z F98A
	06	G12A G16A G33Z G38A G38B G38C
	07	H33Z
	11	L33Z
	15	P02A P02B P02C
	21B	X07A X07B
36.1B.12↔		BORP KORP MBOR MKOR VAC VAC I VAC II VBOR VKOR
	04	E36A E36B
	05	F01A F01C F03C

CHOP	MDC	DRG
		F03D F04Z F06A F06B F06C F06D F30Z F98A
	06	G12A G16A G33Z G38A G38B G38C
	07	H33Z
	11	L33Z
	15	P02A P02B P02C
	21B	X07A X07B
36.1B.13↔		BORP KORP MBOR MKOR VAC VAC I VAC II VBOR VKOR
	04	E36A E36B
	05	F01A F01C F03C F03D F04Z F06A F06B F06C F06D F30Z F98A
	06	G12A G16A G33Z G38A G38B G38C
	07	H33Z
	11	L33Z
	15	P02A P02B P02C
	21B	X07A X07B
36.1B.14↔		BORP KORP MBOR MKOR VAC VAC I VAC II VBOR VKOR
	04	E36A E36B
	05	F01A F01C F03C F03D F04Z F06A F06B F06C F06D F30Z F98A
	06	G12A G16A G33Z G38A G38B G38C
	07	H33Z
	11	L33Z
	15	P02A P02B P02C
	21B	X07A X07B
36.1B.15↔		BORP KORP MBOR MKOR VAC VAC I VAC II VBOR VKOR
	04	E36A E36B
	05	F01A F01C F03C F03D F04Z F06A F06B F06C F06D F30Z F98A
	06	G12A G16A G33Z G38A G38B G38C
	07	H33Z
	11	L33Z
	15	P02A P02B P02C
	21B	X07A X07B
36.1B.16↔		BORP KORP MBOR MKOR VAC VAC I VAC II VBOR VKOR
	04	E36A E36B
	05	F01A F01C F03C F03D F04Z F06A F06B F06C F06D F30Z F98A
	06	G12A G16A G33Z G38A G38B G38C
	07	H33Z
	11	L33Z
	15	P02A P02B P02C
	21B	X07A X07B
36.1B.17↔		BORP KORP MBOR MKOR VAC VAC I VAC II VBOR VKOR
	04	E36A E36B
	05	F01A F01C F03C

CHOP	MDC	DRG
		F03D F04Z F06A F06B F06C F06D F30Z F98A
	06	G12A G16A G33Z G38A G38B G38C
	07	H33Z
	11	L33Z
	15	P02A P02B P02C
	21B	X07A X07B
36.1B.18↔		BORP KORP MBOR MKOR VAC VAC I VAC II VBOR VKOR
	04	E36A E36B
	05	F01A F01C F03C F03D F04Z F06A F06B F06C F06D F30Z F98A
	06	G12A G16A G33Z G38A G38B G38C
	07	H33Z
	11	L33Z
	15	P02A P02B P02C
	21B	X07A X07B
36.1B.1A↔		BORP KORP MBOR MKOR VAC VAC I VAC II VBOR VKOR
	04	E36A E36B
	05	F01A F01C F03C F03D F04Z F06A F06B F06C F06D F30Z F98A
	06	G12A G16A G33Z G38A G38B G38C
	07	H33Z
	11	L33Z
	15	P02A P02B P02C
	21B	X07A X07B
36.1B.21↔		BORP KORP MBOR MKOR VAC VAC I VAC II VBOR VKOR
	04	E36A E36B
	05	F01A F01C F03C F03D F04Z F06A F06B F06C F06D F30Z F98A
	06	G12A G16A G33Z G38A G38B G38C
	07	H33Z
	11	L33Z
	15	P02A P02B P02C
	21B	X07A X07B
36.1B.22↔		BORP KORP MBOR MKOR VAC VAC I VAC II VBOR VKOR
	04	E36A E36B
	05	F01A F01C F03C F03D F04Z F06A F06B F06C F06D F30Z F98A
	06	G12A G16A G33Z G38A G38B G38C
	07	H33Z
	11	L33Z
	15	P02A P02B P02C
	21B	X07A X07B
36.1B.23↔		BORP KORP MBOR MKOR VAC VAC I VAC II VBOR VKOR
	04	E36A E36B
	05	F01A F01C F03C

CHOP	MDC	DRG
		F03D F04Z F06A
		F06B F06C F06D
		F30Z F98A
	06	G12A G16A G33Z
		G38A G38B G38C
	07	H33Z
	11	L33Z
	15	P02A P02B P02C
	21B	X07A X07B
36.1B.24↔		BORP KORP MBOR
		MKOR VAC VAC I
		VAC II VBOR VKOR
	04	E36A E36B
	05	F01A F01C F03C
		F03D F04Z F06A
		F06B F06C F06D
		F30Z F98A
	06	G12A G16A G33Z
		G38A G38B G38C
	07	H33Z
	11	L33Z
	15	P02A P02B P02C
	21B	X07A X07B
36.1B.25↔		BORP KORP MBOR
		MKOR VAC VAC I
		VAC II VBOR VKOR
	04	E36A E36B
	05	F01A F01C F03C
		F03D F04Z F06A
		F06B F06C F06D
		F30Z F98A
	06	G12A G16A G33Z
		G38A G38B G38C
	07	H33Z
	11	L33Z
	15	P02A P02B P02C
	21B	X07A X07B
36.1B.26↔		BORP KORP MBOR
		MKOR VAC VAC I
		VAC II VBOR VKOR
	04	E36A E36B
	05	F01A F01C F03C
		F03D F04Z F06A
		F06B F06C F06D
		F30Z F98A
	06	G12A G16A G33Z
		G38A G38B G38C
	07	H33Z
	11	L33Z
	15	P02A P02B P02C
	21B	X07A X07B
36.1B.27↔		BORP KORP MBOR
		MKOR VAC VAC I
		VAC II VBOR VKOR
	04	E36A E36B
	05	F01A F01C F03C
		F03D F04Z F06A
		F06B F06C F06D
		F30Z F98A
	06	G12A G16A G33Z
		G38A G38B G38C
	07	H33Z
	11	L33Z
	15	P02A P02B P02C
	21B	X07A X07B
36.1B.28↔		BORP KORP MBOR
		MKOR VAC VAC I
		VAC II VBOR VKOR
	04	E36A E36B
	05	F01A F01C F03C

CHOP	MDC	DRG
		F03D F04Z F06A
		F06B F06C F06D
		F30Z F98A
	06	G12A G16A G33Z
		G38A G38B G38C
	07	H33Z
	11	L33Z
	15	P02A P02B P02C
	21B	X07A X07B
36.1B.2A↔		BORP KORP MBOR
		MKOR VAC VAC I
		VAC II VBOR VKOR
	04	E36A E36B
	05	F01A F01C F03C
		F03D F04Z F06A
		F06B F06C F06D
		F30Z F98A
	06	G12A G16A G33Z
		G38A G38B G38C
	07	H33Z
	11	L33Z
	15	P02A P02B P02C
	21B	X07A X07B
36.1B.99↔		BORP KORP MBOR
		MKOR VAC VAC I
		VAC II VBOR VKOR
	04	E36A E36B
	05	F01A F01C F03C
		F03D F04Z F06A
		F06B F06C F06D
		F30Z F98A
	06	G12A G16A G33Z
		G38A G38B G38C
	07	H33Z
	11	L33Z
	15	P02A P02B P02C
	21B	X07A X07B
36.2↔		BORP KORP MBOR
		MKOR VAC VAC I
		VAC II VBOR VKOR
	04	E36A E36B
	05	F01A F01C F03C
		F03D F04Z F06A
		F06B F06C F06D
		F30Z F98A
	06	G12A G16A G38A
		G38B
	15	P02A P02B P02C
	21B	X06A X06B X06C
36.32↔		BORP KORP MBOR
		MKOR VAC VAC I
		VAC II VBOR VKOR
	04	E01A E01B E05A
		E05B E05C E36A
		E36B
	05	F01A F01C F03C
		F03D F04Z F06A
		F06B F06C F06D
		F12A F24A F24B
		F24C F24D F30Z
		F50A F50B F98A
	06	G12A G16A G33Z
		G38A G38B G38C
	07	H33Z
	11	L33Z
	15	P02A P02B P02C
	21B	X07A X07B
36.33↔		BORP KORP MBOR
		MKOR VAC VAC I
		VAC II VBOR VKOR

CHOP	MDC	DRG
	04	E01A E01B E05A
		E05B E05C E36A
		E36B
	05	F01A F01C F03C
		F03D F04Z F06A
		F06B F06C F06D
		F30Z F98A
	06	G12A G16A G33Z
		G38A G38B G38C
	07	H33Z
	11	L33Z
	15	P02A P02B P02C
	21B	X07A X07B
36.39.00↔	05	F01A F01C F03C
		F03D F04Z F06A
		F06B F06C F06D
		F30Z F98A
	06	G33Z G38A G38B
		G38C
	07	H33Z
	11	L33Z
	15	P02A P02B P02C
	21B	X06A X06B X06C
		X07A X07B
36.39.10↔		BORP KORP MBOR
		MKOR VAC VAC I
		VAC II VBOR VKOR
	04	E36A E36B
	05	F01A F01C F03C
		F03D F04Z F06A
		F06B F06C F06D
		F30Z F98A
	06	G12A G16A G33Z
		G38A G38B G38C
	07	H33Z
	11	L33Z
	15	P02A P02B P02C
	21B	X07A X07B
36.39.11↔		BORP KORP MBOR
		MKOR VAC VAC I
		VAC II VBOR VKOR
	04	E36A E36B
	05	F01A F01C F03C
		F03D F04Z F06A
		F06B F06C F06D
		F30Z F98A
	06	G12A G16A G33Z
		G38A G38B G38C
	07	H33Z
	11	L33Z
	15	P02A P02B P02C
	21B	X06A X06B X06C
		X07A X07B
36.39.12↔		BORP KORP MBOR
		MKOR VAC VAC I
		VAC II VBOR VKOR
	04	E36A E36B
	05	F01A F01C F03C
		F03D F04Z F06A
		F06B F06C F06D
		F30Z F98A
	06	G12A G16A G33Z
		G38A G38B G38C
	07	H33Z
	11	L33Z
	15	P02A P02B P02C
	21B	X06A X06B X06C
		X07A X07B
36.39.13↔		BORP KORP MBOR
		MKOR VAC VAC I

PROC

PROC

CHOP	MDC	DRG
		VAC II VBOR VKOR
	04	E36A E36B
	05	F01A F01C F03C
		F03D F04Z F06A
		F06B F06C F06D
		F30Z F98A
	06	G12A G16A G33Z
		G38A G38B G38C
	07	H33Z
	11	L33Z
	15	P02A P02B P02C
	21B	X06A X06B X06C
		X07A X07B
36.39.99↔	05	F01A F01C F03C
		F03D F04Z F06A
		F06B F06C F06D
		F30Z F98A
	06	G33Z G38A G38B
		G38C
	07	H33Z
	11	L33Z
	15	P02A P02B P02C
	21B	X06A X06B X06C
		X07A X07B
36.91↔		BORP MBOR VAC
		VAC I VAC II VBOR
	04	E36A E36B
	05	F01A F01C F03C
		F03D F04Z F06A
		F06B F06C F06D
		F30Z F98A
	06	G12A G16A G38A
		G38B
	15	P02A P02B P02C
	21B	X06A X06B X06C
36.99.00↔	05	F01A F01C F03B
		F03C F03D F04Z
		F06A F06B F06C
		F06D F30Z F98A
	15	P02A P02B P02C
	21B	X06A X06B X06C
36.99.10‡↔	01	B60A
	05	F24A F24B F24C
		F24D
36.99.11‡↔	01	B60A
	05	F24A F24B F24C
		F24D
36.99.12‡↔	01	B60A
	05	F24A F24B F24C
		F24D
36.99.19‡↔	01	B60A
	05	F24A F24B F24C
		F24D
36.99.20↔		BORP MBOR VAC
		VBOR
	04	E36A E36B
	05	F01A F01C F03B
		F03C F03D F04Z
		F06A F06B F06C
		F06D F30Z F98A
	06	G12A G16A G38A
		G38B
	15	P02A P02B P02C
	21B	X06A X06B X06C
36.99.30↔		BORP MBOR VAC
		VAC I VAC II VBOR
	04	E36A E36B
	05	F01A F01C F03B
		F03C F03D F04Z
		F06A F06B F06C
		F06D F30Z F98A
	06	G12A G16A G38A
		G38B
	15	P02A P02B P02C
	21B	X06A X06B X06C
36.99.40↔		BORP MBOR VAC
		VAC I VAC II VBOR
	04	E36A E36B
	05	F01A F01C F03B
		F03C F03D F04Z
		F06A F06B F06C
		F06D F30Z F98A
	06	G12A G16A G38A
		G38B
	15	P02A P02B P02C
	21B	X06A X06B X06C
36.99.99↔	05	F01A F01C F03B
		F03C F03D F04Z
		F06A F06B F06C
		F06D F30Z F98A
	15	P02A P02B P02C
	21B	X06A X06B X06C
37.10↔	05	F01A F01C F30Z
		F31A F31B F31C
		F31D F31E
	15	P02A P02B P02C
	21B	X06A X06B X06C
37.11↔		BORP MBOR VAC
		VAC I VAC II VBOR
	04	E36A E36B
	05	F01A F01C F30Z
		F31A F31B F31C
		F31D F31E
	06	G12A G16A G33Z
		G38A G38B G38C
	07	H33Z
	11	L33Z
	15	P02A P02B P02C
	21B	X06A X06B X06C
37.12.00↔		BORP MBOR VAC
		VAC I VAC II VBOR
	04	E01A E01B E05A
		E05B E05C E36A
		E36B
	05	F01A F01C F31A
		F31B F31C F31D
		F31E
	06	G12A G16A G33Z
		G38A G38B G38C
	07	H33Z
	11	L33Z
	21B	X06A X06B X06C
37.12.09↔		BORP MBOR VAC
		VAC I VAC II VBOR
	04	E01A E01B E05A
		E05B E05C E36A
		E36B
	05	F01A F01C F31A
		F31B F31C F31D
		F31E
	06	G12A G16A G33Z
		G38A G38B G38C
	07	H33Z
	11	L33Z
	21B	X06A X06B X06C
37.12.11↔		BORP MBOR VAC
		VAC I VAC II VBOR
	04	E01A E01B E05A
		E05B E05C E36A
		E36B
	05	F01A F01C F31A
		F31B F31C F31D
		F31E
	06	G12A G16A G33Z
		G38A G38B G38C
	07	H33Z
	11	L33Z
	21B	X06A X06B X06C
37.12.12↔		BORP MBOR VAC
		VAC I VAC II VBOR
	04	E01A E01B E05A
		E05B E05C E36A
		E36B
	05	F01A F01C F31A
		F31B F31C F31D
		F31E
	06	G12A G16A G33Z
		G38A G38B G38C
	07	H33Z
	11	L33Z
	21B	X06A X06B X06C
37.21‡↔	01	B60A
	05	F03C F03D F04Z
		F06A F06B F06C
		F41A F41B F49A
		F49B F49C F49D
		F49E F49F F61A
37.22‡↔	01	B60A
	05	F03C F03D F04Z
		F06A F06B F06C
		F41A F41B F49A
		F49B F49C F49D
		F49E F49F F61A
37.23‡↔	01	B60A
	05	F03C F03D F04Z
		F06A F06B F06C
		F41A F41B F49A
		F49B F49C F49D
		F49E F49F F61A
37.24.10‡↔		AKBB
	01	B60A
	05	F49A F49C
	16	Q86A
37.24.20↔		BORP MBOR VAC
		VAC I VAC II VBOR
	04	E01A E01B E06A
		E06B E06C E36A
		E36B
	05	F01A F01C F31A
		F31B F31C F31D
		F31E F49A F49C
	06	G12A G16A G38A
		G38B
37.24.99‡↔		AKBB
	01	B60A
	05	F49A F49C
	16	Q86A
37.25.10‡↔		AKBB
	01	B60A
	05	F49A F49C
	16	Q86A
37.25.20↔		BORP MBOR VAC
		VAC I VAC II VBOR
	04	E01A E01B E06A
		E06B E06C E36A
		E36B
	05	F01A F01C F31A
		F31B F31C F31D
		F31E F49A F49C
	06	G12A G16A G38A

CHOP	MDC	DRG
		G38B
	08	I28A I28B I28C
37.25.30↔		BORP MBOR VAC
		VAC I VAC II VBOR
	04	E01A E01B E06A
		E06B E06C E36A
		E36B
	05	F01A F01C F31A
		F31B F31C F31D
		F31E F49A F49C
	06	G12A G16A G38A
		G38B
37.25.99‡↔		AKBB
	01	B60A
	05	F49A F49C
	16	Q86A
37.26‡↔	01	B60A
	05	F49A F49B F49C
		F49D F49E F49F
		F61A
37.27.00‡↔	01	B60A
	05	F49A F49B F49C
		F49D F49E F49F
		F61A
37.27.09‡↔	01	B60A
	05	F49A F49B F49C
		F49D F49E F49F
		F61A
37.27.11‡↔	01	B60A
	05	F49A F49B F49C
		F49D F49E F49F
		F61A
37.28‡↔	01	B60A
	05	F03C F03D F04Z
		F06A F06B F06C
		F41A F41B F49A
		F49B F49C F49D
		F49E F49F F61A
37.2A.10‡↔	01	B60A
	05	F49A F49C
37.2A.11‡↔	01	B60A
	05	F03C F03D F04Z
		F06A F06B F06C
		F24A F24B F41A
		F41B F49A F49B
		F49C F49D F49E
		F61A
37.2A.12‡↔	01	B60A
	05	F03C F03D F04Z
		F06A F06B F06C
		F24A F24B F41A
		F41B F49A F49B
		F49C F49D F49E
		F61A
37.2A.19‡↔	01	B60A
	05	F03C F03D F04Z
		F06A F06B F06C
		F41A F41B F49A
		F49B F49C F49D
		F49E F49F F61A
37.2A.20‡↔	01	B60A
	05	F03C F03D F04Z
		F06A F06B F06C
		F41A F41B F49A
		F49B F49C F49D
		F49E F49F F61A
37.2A.21‡↔	01	B60A
	05	F03C F03D F04Z
		F06A F06B F06C
		F24A F41A F41B

CHOP	MDC	DRG
		F49A F49B F49C
		F49D F49E F61A
37.2A.29‡↔	01	B60A
	05	F03C F03D F04Z
		F06A F06B F06C
		F41A F41B F49A
		F49B F49C F49D
		F49E F49F F61A
37.2A.99‡↔	01	B60A
	05	F03C F03D F04Z
		F06A F06B F06C
		F41A F41B F49A
		F49B F49C F49D
		F49E F49F F61A
37.31.00↔		BORP MBOR VAC
		VAC I VAC II VBOR
	04	E01A E01B E02A
		E02B E02C E05A
		E05B E05C E36A
		E36B
	05	F01A F01C F31A
		F31B F31C F31D
		F31E
	06	G12A G16A G16B
		G18A G18B G19A
		G19B G33Z G38A
		G38B G38C
	07	H33Z
	08	I23A I23B
	09	J02A J02B J03A
		J03B J04Z J11A
		J11B
	11	L33Z
	21B	X06A X06B X06C
37.31.10↔		BORP MBOR VAC
		VAC I VAC II VBOR
	04	E01A E01B E02A
		E02B E02C E05A
		E05B E05C E36A
		E36B
	05	F01A F01C F31A
		F31B F31C F31D
		F31E
	06	G12A G16A G16B
		G18A G18B G19A
		G19B G33Z G38A
		G38B G38C
	07	H33Z
	08	I23A I23B
	09	J02A J02B J03A
		J03B J04Z J11A
		J11B
	11	L33Z
	21B	X06A X06B X06C
37.31.20↔		BORP KORP MBOR
		MKOR VAC VAC I
		VAC II VBOR VKOR
	04	E01A E01B E02A
		E02B E02C E05A
		E05B E05C E36A
		E36B
	05	F01A F01C F31A
		F31B F31C F31D
		F31E
	06	G12A G16A G16B
		G18A G18B G19A
		G19B G33Z G38A
		G38B G38C
	07	H33Z
	08	I23A I23B

CHOP	MDC	DRG
	09	J02A J02B J03A
		J03B J04Z J11A
		J11B
	11	L33Z
	21B	X06A X06B X06C
37.31.30↔		BORP MBOR VAC
		VAC I VAC II VBOR
	04	E01A E01B E02A
		E02B E02C E05A
		E05B E05C E36A
		E36B
	05	F01A F01C F31A
		F31B F31C F31D
		F31E
	06	G12A G16A G16B
		G18A G18B G19A
		G19B G33Z G38A
		G38B G38C
	07	H33Z
	08	I23A I23B
	09	J02A J02B J03A
		J03B J04Z J11A
		J11B
	11	L33Z
	21B	X06A X06B X06C
37.31.99↔		BORP KORP MBOR
		MKOR VAC VAC I
		VAC II VBOR VKOR
	04	E01A E01B E02A
		E02B E02C E05A
		E05B E05C E36A
		E36B
	05	F01A F01C F31A
		F31B F31C F31D
		F31E
	06	G12A G16A G16B
		G18A G18B G19A
		G19B G33Z G38A
		G38B G38C
	07	H33Z
	08	I23A I23B
	09	J02A J02B J03A
		J03B J04Z J11A
		J11B
	11	L33Z
	21B	X06A X06B X06C
37.32↔		BORP KORP MBOR
		MKOR VAC VAC I
		VAC II VBOR VKOR
	04	E36A E36B
	05	F01A F01C F30Z
		F31A F31B F31C
		F31D F31E
	06	G12A G16A G33Z
		G38A G38B G38C
	07	H33Z
	11	L33Z
	15	P02A P02B P02C
	21B	X07A X07B
37.33.00↔		BORP MBOR VAC
		VAC I VAC II VBOR
	04	E36A E36B
	05	F01A F01C F03C
		F03D F04Z F06A
		F06B F06C F31A
		F31B F31C F31D
	06	G12A G16A G33Z
		G38A G38B G38C
	07	H33Z
	11	L33Z

PROC

PROC

CHOP	MDC	DRG
	15	P02A P02B P02C
	21B	X07A X07B
37.33.10↔		BORP MBOR VAC VAC I VAC II VBOR
	04	E36A E36B
	05	F01A F01C F03C F03D F04Z F06A F06B F06C F31A F31B F31C F31D
	06	G12A G16A G33Z G38A G38B G38C
	07	H33Z
	11	L33Z
	15	P02A P02B P02C
	21B	X07A X07B
37.33.11↔		BORP MBOR VAC VAC I VAC II VBOR
	04	E36A E36B
	05	F01A F01C F03B F03C F03D F04Z F06A F06B F06C F31A F31B F31C F31D
	06	G12A G16A G33Z G38A G38B G38C
	07	H33Z
	11	L33Z
	15	P02A P02B P02C
	21B	X07A X07B
37.33.19↔		BORP MBOR VAC VAC I VAC II VBOR
	04	E36A E36B
	05	F01A F01C F03B F03C F03D F04Z F06A F06B F06C F31A F31B F31C F31D
	06	G12A G16A G33Z G38A G38B G38C
	07	H33Z
	11	L33Z
	15	P02A P02B P02C
	21B	X07A X07B
37.33.20↔		BORP MBOR VAC VAC I VAC II VBOR
	04	E36A E36B
	05	F01A F01C F03C F03D F04Z F06A F06B F06C F31A F31B F31C F31D
	06	G12A G16A G33Z G38A G38B G38C
	07	H33Z
	11	L33Z
	15	P02A P02B P02C
	21B	X07A X07B
37.33.30↔		BORP MBOR VAC VAC I VAC II VBOR
	04	E36A E36B
	05	F01A F01C F03C F03D F04Z F06A F06B F06C F31A F31B F31C F31D
	06	G12A G16A G33Z G38A G38B G38C
	07	H33Z
	11	L33Z
	15	P02A P02B P02C
	21B	X07A X07B
37.33.99↔		BORP MBOR VAC VAC I VAC II VBOR
	04	E36A E36B
	05	F01A F01C F03C F03D F04Z F06A F06B F06C F31A F31B F31C F31D
	06	G12A G16A G33Z G38A G38B G38C
	07	H33Z
	11	L33Z
	15	P02A P02B P02C
	21B	X07A X07B
37.34.00‡↔	01	B60A
	05	F03C F03D F04Z F06A F06B F06C F41A F41B F49A F49B F49C F49D F49E F49F F61A
37.34.09‡↔	01	B60A
	05	F03C F03D F04Z F06A F06B F06C F41A F41B F49A F49B F49C F49D F49E F49F F61A
37.34.10↔		BORP MBOR VAC VBOR
	04	E36A E36B
	05	F01A F01C F12A F50A F50B F50C F50D
	06	G12A G16A G38A G38B
37.34.11↔		BORP MBOR VAC VBOR
	04	E36A E36B
	05	F01A F01C F12A F50A F50B F50C F50D
	06	G12A G16A G38A G38B
37.34.12↔		BORP MBOR VAC VBOR
	04	E36A E36B
	05	F01A F01C F12A F50A F50B F50C
	06	G12A G16A G38A G38B
37.34.13↔		BORP MBOR VAC VBOR
	04	E36A E36B
	05	F01A F01C F12A F50A F50B F50C F50D
	06	G12A G16A G38A G38B
37.34.15↔		BORP MBOR VAC VBOR
	04	E36A E36B
	05	F01A F01C F12A F50A F50B F50C
	06	G12A G16A G38A G38B
37.34.16↔		BORP MBOR VAC VBOR
	04	E36A E36B
	05	F01A F01C F12A F50A F50B F50C F50D
	06	G12A G16A G38A G38B
37.34.19↔		BORP MBOR VAC VBOR
	04	E36A E36B
	05	F01A F01C F12A F50A F50B F50C F50D
	06	G12A G16A G38A G38B
37.34.1C↔		BORP MBOR VAC VBOR
	04	E36A E36B
	05	F01A F01C F12A F50A F50B F50C F50D
	06	G12A G16A G38A G38B
37.34.24‡↔	01	B60A
	05	F50A F50B
37.34.25‡↔	01	B60A
	05	F50A F50B
37.34.31↔		BORP MBOR VAC VBOR
	04	E36A E36B
	05	F01A F01C F12A F50A F50B F50C
	06	G12A G16A G38A G38B
37.35↔		BORP KORP MBOR MKOR VAC VAC I VAC II VBOR VKOR
	04	E36A E36B
	05	F01A F01C F30Z F31A F31B F31C F31D F31E
	06	G12A G16A G33Z G38A G38B G38C
	07	H33Z
	11	L33Z
	15	P02A P02B P02C
	21B	X07A X07B
37.40↔		BORP MBOR VAC VBOR
	04	E01A E01B E06A E06B E06C E36A E36B
	05	F01A F01C F31A F31B F31C F31D F31E
	06	G12A G16A G38A G38B
	15	P02A P02B P02C
37.41↔		BORP KORP KP KPP MBOR MKOR VAC VAC I VAC II VBOR VKOR
	04	E01A E01B E05A E05B E05C E36A E36B
	05	F01A F01C F30Z F31A F31B F31C F31D F31E
	06	G12A G16A G33Z G38A G38B G38C
	07	H33Z
	11	L33Z
	15	P02A P02B P02C
	21B	X07A X07B
37.42.11↔		BORP MBOR VAC VAC I VAC II VBOR
	04	E01A E01B E06A

CHOP	MDC	DRG
		E06B E06C E36A E36B
	05	F01A F01C F31A F31B F31C F31D F31E
	06	G12A G16A G38A G38B
	15	P02A P02B P02C
37.42.21↔		BORP MBOR VAC VAC I VAC II VBOR
	04	E01A E01B E06A E06B E06C E36A E36B
	05	F01A F01C F31A F31B F31C F31D F31E
	06	G12A G16A G38A G38B
	15	P02A P02B P02C
37.43.11↔		BORP MBOR VAC VBOR
	04	E36A E36B
	05	F01A F01C F31A F31B F31C F31D F31E
	06	G12A G16A G38A G38B
	15	P02A P02B P02C
37.43.12↔		BORP MBOR VAC VBOR
	04	E36A E36B
	05	F01A F01C F30Z F31A F31B F31C F31D F31E
	06	G12A G16A G38A G38B
	15	P02A P02B P02C
37.49↔		BORP MBOR VAC VBOR
	04	E36A E36B
	05	F01A F01C F31A F31B F31C F31D F31E
	06	G12A G16A G38A G38B
	15	P02A P02B P02C
37.51.00↔		BORP KORP MBOR MKOR VAC VAC I VAC II VBOR VKOR
	04	E36A E36B
	06	G12A G16A G38A G38B
	Prä	A05Z A06A A06B A06C A07A A07B A07C
37.51.10↔		BORP KORP MBOR MKOR VAC VAC I VAC II VBOR VKOR
	04	E36A E36B
	06	G12A G16A G38A G38B
	Prä	A05Z A06A A06B A06C A07A A07B A07C
37.51.20↔		BORP KORP MBOR MKOR VAC VAC I VAC II VBOR VKOR
	04	E36A E36B
	06	G12A G16A G38A G38B
	Prä	A05Z A06A A06B A06C A07A A07B A07C
37.51.99↔		BORP KORP MBOR MKOR VAC VAC I VAC II VBOR VKOR
	04	E36A E36B
	06	G12A G16A G38A G38B
	Prä	A05Z A06A A06B A06C A07A A07B A07C
37.52↔		BORP KORP KP KPP MBOR MKOR VAC VAC I VAC II VBOR VKOR
	04	E36A E36B
	05	F01A F01C F30Z F31A F31B F31C F31D
	06	G12A G16A G33Z G38A G38B G38C
	07	H33Z
	11	L33Z
	15	P02A P02B P02C
	21B	X07A X07B
37.54↔		BORP KORP MBOR MKOR VAC VAC I VAC II VBOR VKOR
	04	E36A E36B
	05	F01A F01C F31A F31B F31C F31D
	06	G12A G16A G33Z G38A G38B G38C
	07	H33Z
	11	L33Z
	21B	X07A X07B
37.69.20‡↔	Prä	A06A A06B A06C A07A A07B A07C
	01	B60A
	05	F87Z
37.69.21‡↔	Prä	A06A A06B A06C A07A A07B A07C
	01	B60A
	05	F87Z
37.69.22‡↔	Prä	A06A A06B A06C A07A A07B A07C
	01	B60A
	05	F87Z
37.69.24‡↔	Prä	A06A A06B A06C A07A A07B A07C
	01	B60A
	05	F87Z
37.69.25‡↔	Prä	A06A A06B A06C A07A A07B A07C
	01	B60A
	05	F87Z
37.69.26‡↔	Prä	A06A A06B A06C A07A A07B A07C
	01	B60A
	05	F87Z
37.69.27‡↔	Prä	A06A A06B A06C A07A A07B A07C
	01	B60A
	05	F87Z
37.69.28‡↔	Prä	A06A A06B A06C A07A A07B A07C
	01	B60A
	05	F87Z
37.69.2A‡↔	Prä	A06A A06B A06C A07A A07B A07C
	01	B60A
	05	F87Z
37.69.2B‡↔	Prä	A06A A06B A06C A07A A07B A07C
	01	B60A
	05	F87Z
37.69.2C‡↔	Prä	A06A A06B A06C A07A A07B A07C
	01	B60A
	05	F87Z
37.69.2D‡↔	Prä	A06A A06B A06C A07A A07B A07C
	01	B60A
	05	F87Z
37.69.2E‡↔	Prä	A06A A06B A06C A07A A07B A07C
	01	B60A
	05	F87Z
37.69.2F‡↔	Prä	A06A A06B A06C A07A A07B A07C
	01	B60A
	05	F87Z
37.69.2G‡↔	Prä	A06A A06B A06C A07A A07B A07C
	01	B60A
	05	F87Z
37.69.2H‡↔	Prä	A06A A06B A06C A07A A07B A07C
	01	B60A
	05	F87Z
37.69.2I‡↔	Prä	A06A A06B A06C A07A A07B A07C
	01	B60A
	05	F87Z
37.69.2J‡↔	Prä	A06A A06B A06C A07A A07B A07C
	01	B60A
	05	F87Z
37.69.2K‡↔	Prä	A06A A06B A06C A07A A07B A07C
	01	B60A
	05	F87Z
37.69.2L‡↔	Prä	A06A A06B A06C A07A A07B A07C
	01	B60A
	05	F87Z
37.69.2M‡↔	Prä	A06A A06B A06C A07A A07B A07C
	01	B60A
	05	F87Z
37.69.2N‡↔	Prä	A06A A06B A06C A07A A07B A07C
	01	B60A
	05	F87Z
37.69.40‡↔	Prä	A06A A06B A06C A07A A07B A07C
	01	B60A
	05	F87Z
37.69.41‡↔	Prä	A06A A06B A06C A07A A07B A07C
	01	B60A
	05	F87Z
37.69.42‡↔	Prä	A06A A06B A06C A07A A07B A07C
	01	B60A
	05	F87Z
37.69.44‡↔	Prä	A06A A06B A06C A07A A07B A07C
	01	B60A

PROC

CHOP	MDC	DRG
	05	F87Z
37.69.45‡↔	Prä	A06A A06B A06C
		A07A A07B A07C
	01	B60A
	05	F87Z
37.69.46‡↔	Prä	A06A A06B A06C
		A07A A07B A07C
	01	B60A
	05	F87Z
37.69.47‡↔	Prä	A06A A06B A06C
		A07A A07B A07C
	01	B60A
	05	F87Z
37.69.48‡↔	Prä	A06A A06B A06C
		A07A A07B A07C
	01	B60A
	05	F87Z
37.69.4A‡↔	Prä	A06A A06B A06C
		A07A A07B A07C
	01	B60A
	05	F87Z
37.69.4B‡↔	Prä	A06A A06B A06C
		A07A A07B A07C
	01	B60A
	05	F87Z
37.69.4C‡↔	Prä	A06A A06B A06C
		A07A A07B A07C
	01	B60A
	05	F87Z
37.69.4D‡↔	Prä	A06A A06B A06C
		A07A A07B A07C
	01	B60A
	05	F87Z
37.69.4E‡↔	Prä	A06A A06B A06C
		A07A A07B A07C
	01	B60A
	05	F87Z
37.69.4F‡↔	Prä	A06A A06B A06C
		A07A A07B A07C
	01	B60A
	05	F87Z
37.69.4G‡↔	Prä	A06A A06B A06C
		A07A A07B A07C
	01	B60A
	05	F87Z
37.69.4H‡↔	Prä	A06A A06B A06C
		A07A A07B A07C
	01	B60A
	05	F87Z
37.69.4I‡↔	Prä	A06A A06B A06C
		A07A A07B A07C
	01	B60A
	05	F87Z
37.69.4J‡↔	Prä	A06A A06B A06C
		A07A A07B A07C
	01	B60A
	05	F87Z
37.69.4K‡↔	Prä	A06A A06B A06C
		A07A A07B A07C
	01	B60A
	05	F87Z
37.69.4L‡↔	Prä	A06A A06B A06C
		A07A A07B A07C
	01	B60A
	05	F87Z
37.69.4M‡↔	Prä	A06A A06B A06C
		A07A A07B A07C
	01	B60A
	05	F87Z
37.69.4N‡↔	Prä	A06A A06B A06C

CHOP	MDC	DRG
		A07A A07B A07C
	01	B60A
	05	F87Z
37.69.50‡↔	Prä	A06A A06B A06C
		A07A A07B A07C
	01	B60A
	05	F87Z
37.69.51‡↔	Prä	A06A A06B A06C
		A07A A07B A07C
	01	B60A
	05	F87Z
37.69.52‡↔	Prä	A06A A06B A06C
		A07A A07B A07C
	01	B60A
	05	F87Z
37.69.54‡↔	Prä	A06A A06B A06C
		A07A A07B A07C
	01	B60A
	05	F87Z
37.69.55‡↔	Prä	A06A A06B A06C
		A07A A07B A07C
	01	B60A
	05	F87Z
37.69.56‡↔	Prä	A06A A06B A06C
		A07A A07B A07C
	01	B60A
	05	F87Z
37.69.57‡↔	Prä	A06A A06B A06C
		A07A A07B A07C
	01	B60A
	05	F87Z
37.69.58‡↔	Prä	A06A A06B A06C
		A07A A07B A07C
	01	B60A
	05	F87Z
37.69.5A‡↔	Prä	A06A A06B A06C
		A07A A07B A07C
	01	B60A
	05	F87Z
37.69.5B‡↔	Prä	A06A A06B A06C
		A07A A07B A07C
	01	B60A
	05	F87Z
37.69.5C‡↔	Prä	A06A A06B A06C
		A07A A07B A07C
	01	B60A
	05	F87Z
37.69.5D‡↔	Prä	A06A A06B A06C
		A07A A07B A07C
	01	B60A
	05	F87Z
37.69.5E‡↔	Prä	A06A A06B A06C
		A07A A07B A07C
	01	B60A
	05	F87Z
37.69.5F‡↔	Prä	A06A A06B A06C
		A07A A07B A07C
	01	B60A
	05	F87Z
37.69.5G‡↔	Prä	A06A A06B A06C
		A07A A07B A07C
	01	B60A
	05	F87Z
37.69.5H‡↔	Prä	A06A A06B A06C
		A07A A07B A07C
	01	B60A
	05	F87Z
37.69.5I‡↔	Prä	A06A A06B A06C
		A07A A07B A07C
	01	B60A

CHOP	MDC	DRG
	05	F87Z
37.69.5J‡↔	Prä	A06A A06B A06C
		A07A A07B A07C
	01	B60A
	05	F87Z
37.69.5K‡↔	Prä	A06A A06B A06C
		A07A A07B A07C
	01	B60A
	05	F87Z
37.69.5L‡↔	Prä	A06A A06B A06C
		A07A A07B A07C
	01	B60A
	05	F87Z
37.69.5M‡↔	Prä	A06A A06B A06C
		A07A A07B A07C
	01	B60A
	05	F87Z
37.69.5N‡↔	Prä	A06A A06B A06C
		A07A A07B A07C
	01	B60A
	05	F87Z
37.69.60‡↔	Prä	A06A A06B A06C
		A07A A07B A07C
	01	B60A
	05	F87Z
37.69.61‡↔	Prä	A06A A06B A06C
		A07A A07B A07C
	01	B60A
	05	F87Z
37.69.62‡↔	Prä	A06A A06B A06C
		A07A A07B A07C
	01	B60A
	05	F87Z
37.69.64‡↔	Prä	A06A A06B A06C
		A07A A07B A07C
	01	B60A
	05	F87Z
37.69.65‡↔	Prä	A06A A06B A06C
		A07A A07B A07C
	01	B60A
	05	F87Z
37.69.66‡↔	Prä	A06A A06B A06C
		A07A A07B A07C
	01	B60A
	05	F87Z
37.69.67‡↔	Prä	A06A A06B A06C
		A07A A07B A07C
	01	B60A
	05	F87Z
37.69.68‡↔	Prä	A06A A06B A06C
		A07A A07B A07C
	01	B60A
	05	F87Z
37.69.6A‡↔	Prä	A06A A06B A06C
		A07A A07B A07C
	01	B60A
	05	F87Z
37.69.6B‡↔	Prä	A06A A06B A06C
		A07A A07B A07C
	01	B60A
	05	F87Z
37.69.6C‡↔	Prä	A06A A06B A06C
		A07A A07B A07C
	01	B60A
	05	F87Z
37.69.6D‡↔	Prä	A06A A06B A06C
		A07A A07B A07C
	01	B60A
	05	F87Z
37.69.6E‡↔	Prä	A06A A06B A06C

CHOP	MDC	DRG
		A07A A07B A07C
	01	B60A
	05	F87Z
37.69.6F‡↔	Prä	A06A A06B A06C
		A07A A07B A07C
		A11A A11B
	01	B60A
	05	F87Z
37.69.6G‡↔	Prä	A06A A06B A06C
		A07A A07B A07C
		A11A A11B
	01	B60A
	05	F87Z
37.69.6H‡↔	Prä	A06A A06B A06C
		A07A A07B A07C
		A11A A11B
	01	B60A
	05	F87Z
37.69.6I‡↔	Prä	A06A A06B A06C
		A07A A07B A07C
		A11A A11B
	01	B60A
	05	F87Z
37.69.6J‡↔	Prä	A06A A06B A06C
		A07A A07B A07C
		A11A A11B
	01	B60A
	05	F87Z
37.69.6K‡↔	Prä	A06A A06B A06C
		A07A A07B A07C
		A11A A11B
	01	B60A
	05	F87Z
37.69.6L‡↔	Prä	A06A A06B A06C
		A07A A07B A07C
		A11A A11B
	01	B60A
	05	F87Z
37.69.6M‡↔	Prä	A06A A06B A06C
		A07A A07B A07C
		A11A A11B
	01	B60A
	05	F87Z
37.69.6N‡↔	Prä	A06A A06B A06C
		A07A A07B A07C
		A11A A11B
	01	B60A
	05	F87Z
37.69.70‡↔		KP KPP
	01	B60A
	Prä	A06A A06B A06C
		A07A A07B A07C
		A11A A11B
37.69.71‡↔		KP KPP
	01	B60A
	Prä	A06A A06B A06C
		A07A A07B A07C
		A11A A11B
37.69.72‡↔		KP KPP
	01	B60A
	Prä	A06A A06B A06C
		A07A A07B A07C
		A11A A11B
37.69.73‡↔		KP KPP
	01	B60A
	Prä	A06A A06B A06C
		A07A A07B A07C
		A11A A11B
37.69.74‡↔		KP KPP
	01	B60A

CHOP	MDC	DRG
	Prä	A06A A06B A06C
		A07A A07B A07C
		A11A A11B
37.69.75‡↔		KP KPP
	01	B60A
	Prä	A06A A06B A06C
		A07A A07B A07C
		A11A A11B
37.69.76‡↔		KP KPP
	01	B60A
	Prä	A06A A06B A06C
		A07A A07B A07C
		A11A A11B
37.69.78‡↔		KP KPP
	01	B60A
	Prä	A06A A06B A06C
		A07A A07B A07C
		A11A A11B
37.69.7A‡↔		KP KPP
	01	B60A
	Prä	A06A A06B A06C
		A07A A07B A07C
		A11A A11B
37.69.7B‡↔		KP KPP
	01	B60A
	Prä	A06A A06B A06C
		A07A A07B A07C
		A11A A11B
37.69.7C‡↔		KP KPP
	01	B60A
	Prä	A06A A06B A06C
		A07A A07B A07C
		A11A A11B
37.69.7D‡↔		KP KPP
	01	B60A
	Prä	A06A A06B A06C
		A07A A07B A07C
		A11A A11B
37.69.7E‡↔		KP KPP
	01	B60A
	Prä	A06A A06B A06C
		A07A A07B A07C
		A11A A11B
37.69.7F‡↔		KP KPP
	01	B60A
	Prä	A06A A06B A06C
		A07A A07B A07C
		A11A A11B
37.69.7G‡↔		KP KPP
	01	B60A
	Prä	A06A A06B A06C
		A07A A07B A07C
		A11A A11B
37.69.7H‡↔		KP KPP
	01	B60A
	Prä	A06A A06B A06C
		A07A A07B A07C
		A11A A11B
37.69.7I‡↔		KP KPP
	01	B60A
	Prä	A06A A06B A06C
		A07A A07B A07C
		A11A A11B
37.69.7J‡↔		KP KPP
	01	B60A
	Prä	A06A A06B A06C
		A07A A07B A07C
		A11A A11B
37.69.7L‡↔		KP KPP
	01	B60A

CHOP	MDC	DRG
	Prä	A06A A06B A06C
		A07A A07B A07C
		A11A A11B
37.69.7M‡↔		KP KPP
	01	B60A
	Prä	A06A A06B A06C
		A07A A07B A07C
		A11A A11B
37.69.7N‡↔		KP KPP
	01	B60A
	Prä	A06A A06B A06C
		A07A A07B A07C
		A11A A11B
37.69.7O‡↔		KP KPP
	01	B60A
	Prä	A06A A06B A06C
		A07A A07B A07C
		A11A A11B
37.69.7P‡↔		KP KPP
	01	B60A
	Prä	A06A A06B A06C
		A07A A07B A07C
		A11A A11B
37.69.7Q‡↔		KP KPP
	01	B60A
	Prä	A06A A06B A06C
		A07A A07B A07C
		A11A A11B
37.69.7R‡↔		KP KPP
	01	B60A
	Prä	A06A A06B A06C
		A07A A07B A07C
		A11A A11B
37.69.80‡↔		KP KPP
	01	B60A
	Prä	A06A A06B A06C
		A07A A07B A07C
		A11A A11B
37.69.81‡↔		KP KPP
	01	B60A
	Prä	A06A A06B A06C
		A07A A07B A07C
		A11A A11B
37.69.82‡↔		KP KPP
	01	B60A
	Prä	A06A A06B A06C
		A07A A07B A07C
		A11A A11B
37.69.83‡↔		KP KPP
	01	B60A
	Prä	A06A A06B A06C
		A07A A07B A07C
		A11A A11B
37.69.84‡↔		KP KPP
	01	B60A
	Prä	A06A A06B A06C
		A07A A07B A07C
		A11A A11B
37.69.85‡↔		KP KPP
	01	B60A
	Prä	A06A A06B A06C
		A07A A07B A07C
		A11A A11B
37.69.86‡↔		KP KPP
	01	B60A
	Prä	A06A A06B A06C
		A07A A07B A07C
		A11A A11B
37.69.88‡↔		KP KPP
	01	B60A

PROC

CHOP	MDC	DRG
	Prä	A06A A06B A06C A07A A07B A07C A11A A11B
37.69.8A‡↔		KP KPP
	01	B60A
	Prä	A06A A06B A06C A07A A07B A07C A11A A11B
37.69.8B‡↔		KP KPP
	01	B60A
	Prä	A06A A06B A06C A07A A07B A07C A11A A11B
37.69.8C‡↔		KP KPP
	01	B60A
	Prä	A06A A06B A06C A07A A07B A07C A11A A11B
37.69.8D‡↔		KP KPP
	01	B60A
	Prä	A06A A06B A06C A07A A07B A07C A11A A11B
37.69.8E‡↔		KP KPP
	01	B60A
	Prä	A06A A06B A06C A07A A07B A07C A11A A11B
37.69.8F‡↔		KP KPP
	01	B60A
	Prä	A06A A06B A06C A07A A07B A07C A11A A11B
37.69.8G‡↔		KP KPP
	01	B60A
	Prä	A06A A06B A06C A07A A07B A07C A11A A11B
37.69.8H‡↔		KP KPP
	01	B60A
	Prä	A06A A06B A06C A07A A07B A07C A11A A11B
37.69.8I‡↔		KP KPP
	01	B60A
	Prä	A06A A06B A06C A07A A07B A07C A11A A11B
37.69.8J‡↔		KP KPP
	01	B60A
	Prä	A06A A06B A06C A07A A07B A07C A11A A11B
37.69.8L‡↔		KP KPP
	01	B60A
	Prä	A06A A06B A06C A07A A07B A07C A11A A11B
37.69.8M‡↔		KP KPP
	01	B60A
	Prä	A06A A06B A06C A07A A07B A07C A11A A11B
37.69.8N‡↔		KP KPP
	01	B60A
	Prä	A06A A06B A06C A07A A07B A07C A11A A11B
37.69.8O‡↔		KP KPP
	01	B60A

CHOP	MDC	DRG
	Prä	A06A A06B A06C A07A A07B A07C A11A A11B
37.69.8P‡↔		KP KPP
	01	B60A
	Prä	A06A A06B A06C A07A A07B A07C A11A A11B
37.69.8Q‡↔		KP KPP
	01	B60A
	Prä	A06A A06B A06C A07A A07B A07C A11A A11B
37.69.8R‡↔		KP KPP
	01	B60A
	Prä	A06A A06B A06C A07A A07B A07C A11A A11B
37.69.A0‡↔		KP KPP
	01	B60A
	Prä	A06A A06B A06C A07A A07B A07C A11A A11B
37.69.A1‡↔		KP KPP
	01	B60A
	Prä	A06A A06B A06C A07A A07B A07C A11A A11B
37.69.A2‡↔		KP KPP
	01	B60A
	Prä	A06A A06B A06C A07A A07B A07C A11A A11B
37.69.A3‡↔		KP KPP
	01	B60A
	Prä	A06A A06B A06C A07A A07B A07C A11A A11B
37.69.A4‡↔		KP KPP
	01	B60A
	Prä	A06A A06B A06C A07A A07B A07C A11A A11B
37.69.A5‡↔		KP KPP
	01	B60A
	Prä	A06A A06B A06C A07A A07B A07C A11A A11B
37.69.A6‡↔		KP KPP
	01	B60A
	Prä	A06A A06B A06C A07A A07B A07C A11A A11B
37.69.A8‡↔		KP KPP
	01	B60A
	Prä	A06A A06B A06C A07A A07B A07C A11A A11B
37.69.AA‡↔		KP KPP
	01	B60A
	Prä	A06A A06B A06C A07A A07B A07C A11A A11B
37.69.AB‡↔		KP KPP
	01	B60A
	Prä	A06A A06B A06C A07A A07B A07C A11A A11B
37.69.AC‡↔		KP KPP
	01	B60A

CHOP	MDC	DRG
	Prä	A06A A06B A06C A07A A07B A07C A11A A11B
37.69.AD‡↔		KP KPP
	01	B60A
	Prä	A06A A06B A06C A07A A07B A07C A11A A11B
37.69.AE‡↔		KP KPP
	01	B60A
	Prä	A06A A06B A06C A07A A07B A07C A11A A11B
37.69.AF‡↔		KP KPP
	01	B60A
	Prä	A06A A06B A06C A07A A07B A07C A11A A11B
37.69.AG‡↔		KP KPP
	01	B60A
	Prä	A06A A06B A06C A07A A07B A07C A11A A11B
37.69.AH‡↔		KP KPP
	01	B60A
	Prä	A06A A06B A06C A07A A07B A07C A11A A11B
37.69.AI‡↔		KP KPP
	01	B60A
	Prä	A06A A06B A06C A07A A07B A07C A11A A11B
37.69.AJ‡↔		KP KPP
	01	B60A
	Prä	A06A A06B A06C A07A A07B A07C A11A A11B
37.69.AL‡↔		KP KPP
	01	B60A
	Prä	A06A A06B A06C A07A A07B A07C A11A A11B
37.69.AM‡↔		KP KPP
	01	B60A
	Prä	A06A A06B A06C A07A A07B A07C A11A A11B
37.69.AN‡↔		KP KPP
	01	B60A
	Prä	A06A A06B A06C A07A A07B A07C A11A A11B
37.69.AO‡↔		KP KPP
	01	B60A
	Prä	A06A A06B A06C A07A A07B A07C A11A A11B
37.69.AP‡↔		KP KPP
	01	B60A
	Prä	A06A A06B A06C A07A A07B A07C A11A A11B
37.69.AQ‡↔		KP KPP
	01	B60A
	Prä	A06A A06B A06C A07A A07B A07C A11A A11B
37.69.AR‡↔		KP KPP
	01	B60A

CHOP	MDC	DRG
	Prä	A06A A06B A06C
		A07A A07B A07C
		A11A A11B
37.69.B0‡↔		KP KPP
	01	B60A
	Prä	A06A A06B A06C
		A07A A07B A07C
		A11A A11B
37.69.B1‡↔		KP KPP
	01	B60A
	Prä	A06A A06B A06C
		A07A A07B A07C
		A11A A11B
37.69.B2‡↔		KP KPP
	01	B60A
	Prä	A06A A06B A06C
		A07A A07B A07C
		A11A A11B
37.69.B3‡↔		KP KPP
	01	B60A
	Prä	A06A A06B A06C
		A07A A07B A07C
		A11A A11B
37.69.B4‡↔		KP KPP
	01	B60A
	Prä	A06A A06B A06C
		A07A A07B A07C
		A11A A11B
37.69.B5‡↔		KP KPP
	01	B60A
	Prä	A06A A06B A06C
		A07A A07B A07C
		A11A A11B
37.69.B6‡↔		KP KPP
	01	B60A
	Prä	A06A A06B A06C
		A07A A07B A07C
		A11A A11B
37.69.B8‡↔		KP KPP
	01	B60A
	Prä	A06A A06B A06C
		A07A A07B A07C
		A11A A11B
37.69.BA‡↔		KP KPP
	01	B60A
	Prä	A06A A06B A06C
		A07A A07B A07C
		A11A A11B
37.69.BB‡↔		KP KPP
	01	B60A
	Prä	A06A A06B A06C
		A07A A07B A07C
		A11A A11B
37.69.BC‡↔		KP KPP
	01	B60A
	Prä	A06A A06B A06C
		A07A A07B A07C
		A11A A11B
37.69.BD‡↔		KP KPP
	01	B60A
	Prä	A06A A06B A06C
		A07A A07B A07C
		A11A A11B
37.69.BE‡↔		KP KPP
	01	B60A
	Prä	A06A A06B A06C
		A07A A07B A07C
		A11A A11B
37.69.BF‡↔		KP KPP
	01	B60A

CHOP	MDC	DRG
	Prä	A06A A06B A06C
		A07A A07B A07C
		A11A A11B
37.69.BG‡↔		KP KPP
	01	B60A
	Prä	A06A A06B A06C
		A07A A07B A07C
		A11A A11B
37.69.BH‡↔		KP KPP
	01	B60A
	Prä	A06A A06B A06C
		A07A A07B A07C
		A11A A11B
37.69.BI‡↔		KP KPP
	01	B60A
	Prä	A06A A06B A06C
		A07A A07B A07C
		A11A A11B
37.69.BJ‡↔		KP KPP
	01	B60A
	Prä	A06A A06B A06C
		A07A A07B A07C
		A11A A11B
37.69.BL‡↔		KP KPP
	01	B60A
	Prä	A06A A06B A06C
		A07A A07B A07C
		A11A A11B
37.69.BM‡↔		KP KPP
	01	B60A
	Prä	A06A A06B A06C
		A07A A07B A07C
		A11A A11B
37.69.BN‡↔		KP KPP
	01	B60A
	Prä	A06A A06B A06C
		A07A A07B A07C
		A11A A11B
37.69.BO‡↔		KP KPP
	01	B60A
	Prä	A06A A06B A06C
		A07A A07B A07C
		A11A A11B
37.69.BP‡↔		KP KPP
	01	B60A
	Prä	A06A A06B A06C
		A07A A07B A07C
		A11A A11B
37.69.BQ‡↔		KP KPP
	01	B60A
	Prä	A06A A06B A06C
		A07A A07B A07C
		A11A A11B
37.69.BR‡↔		KP KPP
	01	B60A
	Prä	A06A A06B A06C
		A07A A07B A07C
		A11A A11B
37.6A.11↔		BORP KORP KP
		KPP MBOR MKOR
		VAC VAC I VAC II
		VBOR VKOR
	04	E01A E01B E05A
		E05B E05C E36A
		E36B
	05	F01A F01C F30Z
		F31A F31B F31C
		F31D F36A F36B
		F36C F36D
	06	G12A G16A G33Z

CHOP	MDC	DRG
		G38A G38B G38C
	07	H33Z
	11	L33Z
	15	P02A P02B P02C
	21B	X07A X07B
	Prä	A06A A06B A06C
		A07A A11A A11B
		A11C A11D
37.6A.12↔		BORP KORP KP
		KPP MBOR MKOR
		VAC VAC I VAC II
		VBOR VKOR
	04	E01A E01B E05A
		E05B E05C E36A
		E36B
	05	F01A F01C F30Z
		F31A F31B F31C
		F31D F36A F36B
		F36C F36D
	06	G12A G16A G33Z
		G38A G38B G38C
	07	H33Z
	11	L33Z
	15	P02A P02B P02C
	21B	X07A X07B
	Prä	A06A A06B A06C
		A07A A11A A11B
		A11C A11D
37.6A.21↔		BORP KORP KP
		KPP MBOR MKOR
		VAC VAC I VAC II
		VBOR VKOR
	04	E01A E01B E05A
		E05B E05C E36A
		E36B
	05	F01A F01C F30Z
		F31A F31B F31C
		F31D F36A F36B
		F36C F36D
	06	G12A G16A G33Z
		G38A G38B G38C
	07	H33Z
	11	L33Z
	15	P02A P02B P02C
	21B	X07A X07B
	Prä	A06A A06B A06C
		A07A A11A A11B
		A11C A11D
37.6A.35↔		BORP KORP KP
		KPP MBOR MKOR
		VAC VAC I VAC II
		VBOR VKOR
	04	E01A E01B E05A
		E05B E05C E36A
		E36B
	05	F01A F01C F30Z
		F31A F31B F31C
		F31D F36A F36B
		F36C F36D
	06	G12A G16A G33Z
		G38A G38B G38C
	07	H33Z
	11	L33Z
	15	P02A P02B P02C
	21B	X07A X07B
	Prä	A06A A06B A06C
		A07A A11A A11B
		A11C A11D
37.6A.37↔		BORP KORP KP
		KPP MBOR MKOR

PROC

PROC

CHOP	MDC	DRG
		VAC VAC I VAC II VBOR VKOR
	04	E01A E01B E05A E05B E05C E36A E36B
	05	F01A F01C F30Z F31A F31B F31C F31D F36A F36B F36C F36D
	06	G12A G16A G33Z G38A G38B G38C
	07	H33Z
	11	L33Z
	15	P02A P02B P02C
	21B	X07A X07B
	Prä	A06A A06B A06C A07A A11A A11B A11C A11D
37.6A.3A↔		BORP KORP KP KPP MBOR MKOR VAC VAC I VAC II VBOR VKOR
	04	E01A E01B E05A E05B E05C E36A E36B
	05	F01A F01C F30Z F31A F31B F31C F31D F36A F36B F36C F36D
	06	G12A G16A G33Z G38A G38B G38C
	07	H33Z
	11	L33Z
	15	P02A P02B P02C
	21B	X07A X07B
	Prä	A06A A06B A06C A07A A11A A11B A11C A11D
37.6A.42↔		KP KPP
	05	F01A F01C F19Z F31C F31D F36B F36C F36D F37A F90A F90B
	Prä	A11A A11B
37.6A.44↔		KP KPP
	05	F01A F01C F19Z F31C F31D F36B F36C F36D F37A F90A F90B
	Prä	A11A A11B
37.6A.45↔		KP KPP
	05	F01A F01C F19Z F31C F31D F36B F36C F36D F37A F90A F90B
	Prä	A11A A11B
37.6A.46↔		KP KPP
	05	F01A F01C F19Z F31C F31D F36B F36C F36D F37A F90A F90B
	Prä	A11A A11B
37.6A.47↔		KP KPP
	05	F01A F01C F19Z F31C F31D F36B F36C F36D F37A F90A F90B
	Prä	A11A A11B
37.6A.48↔		BORP KORP KP KPP MBOR MKOR

CHOP	MDC	DRG
		VAC VAC I VAC II VBOR VKOR
	04	E36A E36B
	05	F01A F01C F31A F31B F31C F31D
	06	G12A G16A G38A G38B
37.6A.4B↔		BORP KORP KP KPP MBOR MKOR VAC VAC I VAC II VBOR VKOR
	04	E36A E36B
	05	F01A F01C F31A F31B F31C F31D
	06	G12A G16A G38A G38B
37.6A.4C↔		BORP KORP KP KPP MBOR MKOR VAC VAC I VAC II VBOR VKOR
	04	E36A E36B
	05	F01A F01C F31A F31B F31C F31D
	06	G12A G16A G38A G38B
37.6A.4D↔		BORP KORP KP KPP MBOR MKOR VAC VAC I VAC II VBOR VKOR
	04	E36A E36B
	05	F01A F01C F31A F31B F31C F31D
	06	G12A G16A G38A G38B
37.6A.4E↔		BORP KORP KP KPP MBOR MKOR VAC VAC I VAC II VBOR VKOR
	04	E36A E36B
	05	F01A F01C F31A F31B F31C F31D
	06	G12A G16A G38A G38B
37.6A.4F↔		KP KPP
	05	F01A F01C F19Z F31C F31D F36B F36C F36D F37A F90A F90B
	Prä	A11A A11B
37.6A.4H↔		KP KPP
	05	F01A F01C F19Z F31C F31D F36B F36C F36D F37A F90A F90B
	Prä	A11A A11B
37.6A.4I↔		KP KPP
	05	F01A F01C F19Z F31C F31D F36B F36C F36D F37A F90A F90B
	Prä	A11A A11B
37.6A.4J↔		KP KPP
	05	F01A F01C F19Z F31C F31D F36B F36C F36D F37A F90A F90B
	Prä	A11A A11B
37.6A.4K↔		KP KPP
	05	F01A F01C F19Z F31C F31D F36B

CHOP	MDC	DRG
		F36C F36D F37A F90A F90B
	Prä	A11A A11B
37.6A.51↔		BORP KPP MBOR VAC VAC I VAC II VBOR
	04	E01A E01B E05A E05B E05C E36A E36B
	05	F01A F01C F19Z F30Z F31C F31D F36B F36C F36D F90A F90B
	06	G12A G16A G33Z G38A G38B G38C
	07	H33Z
	11	L33Z
	15	P02A P02B P02C
	21B	X07A X07B
	Prä	A11A A11B
37.6A.61↔		BORP KORP KP KPP MBOR MKOR VAC VAC I VAC II VBOR VKOR
	04	E01A E01B E05A E05B E05C E36A E36B
	05	F01A F01C F30Z F31A F31B F31C F31D
	06	G12A G16A G33Z G38A G38B G38C
	07	H33Z
	11	L33Z
	15	P02A P02B P02C
	21B	X07A X07B
37.6A.62↔		BORP KPP MBOR VAC VAC I VAC II VBOR
	04	E01A E01B E05A E05B E05C E36A E36B
	05	F01A F01C F19Z F30Z F31C F31D F36B F36C F36D F90A F90B
	06	G12A G16A G33Z G38A G38B G38C
	07	H33Z
	11	L33Z
	15	P02A P02B P02C
	21B	X07A X07B
	Prä	A11A A11B
37.6A.71↔		BORP KORP KP KPP MBOR MKOR VAC VAC I VAC II VBOR VKOR
	04	E01A E01B E05A E05B E05C E36A E36B
	05	F01A F01C F30Z F31A F31B F31C F31D
	06	G12A G16A G33Z G38A G38B G38C
	07	H33Z
	11	L33Z
	15	P02A P02B P02C
	21B	X07A X07B
37.6A.72↔		BORP KPP MBOR

CHOP	MDC	DRG
		VAC VAC I VAC II VBOR
	04	E01A E01B E05A E05B E05C E36A E36B
	05	F30Z F31C F31D F36B F36C F36D F90A F90B
	06	G12A G16A G33Z G38A G38B G38C
	07	H33Z
	11	L33Z
	15	P02A P02B P02C
	21B	X07A X07B
	Prä	A11A A11B
37.6A.73↔		BORP KPP MBOR VAC VAC I VAC II VBOR
	04	E01A E01B E05A E05B E05C E36A E36B
	05	F01A F01C F19Z F30Z F31C F31D F36B F36C F36D F90A F90B
	06	G12A G16A G33Z G38A G38B G38C
	07	H33Z
	11	L33Z
	15	P02A P02B P02C
	21B	X07A X07B
	Prä	A11A A11B
37.6A.81↔		BORP KP KPP MBOR VAC VAC I VAC II VBOR
	04	E36A E36B
	05	F01A F01C F31A F31B F31C F31D F37A
	06	G12A G16A G38A G38B
37.6A.82↔		KP KPP
	05	F01A F01C F19Z F31C F31D F37A
37.6A.A1‡↔		KP KPP
	01	B60A
	Prä	A06A A06B A06C A11A A11B
37.6A.A2‡↔		KP KPP
	01	B60A
	Prä	A06A A06B A06C A11A A11B
37.6B.11↔	05	F01A F01C F30Z F31A F31B F31C F31D
	07	H33Z
	11	L33Z
	15	P02A P02B P02C
	21B	X07A X07B
37.6B.12↔	05	F01A F01C F30Z F31A F31B F31C F31D
	07	H33Z
	11	L33Z
	15	P02A P02B P02C
	21B	X07A X07B
37.6B.21↔	05	F01A F01C F30Z F31A F31B F31C F31D
	07	H33Z
	11	L33Z
	15	P02A P02B P02C
	21B	X07A X07B
37.6B.31↔	05	F01A F01C F30Z F31A F31B F31C F31D
	07	H33Z
	11	L33Z
	15	P02A P02B P02C
	21B	X07A X07B
37.6B.32↔	05	F01A F01C F30Z F31A F31B F31C F31D
	07	H33Z
	11	L33Z
	15	P02A P02B P02C
	21B	X07A X07B
37.6B.33↔	05	F01A F01C F30Z F31A F31B F31C F31D
	07	H33Z
	11	L33Z
	15	P02A P02B P02C
	21B	X07A X07B
37.6B.43↔	05	F01A F01C F30Z F31A F31B F31C F31D
	07	H33Z
	11	L33Z
	15	P02A P02B P02C
	21B	X07A X07B
37.6B.44↔	05	F01A F01C F30Z F31A F31B F31C F31D
	07	H33Z
	11	L33Z
	15	P02A P02B P02C
	21B	X07A X07B
37.6B.71↔	05	F01A F01C F30Z F31A F31B F31C F31D
	07	H33Z
	11	L33Z
	15	P02A P02B P02C
	21B	X07A X07B
37.6B.81↔	05	F01A F01C F30Z F31A F31B F31C F31D
	07	H33Z
	11	L33Z
	15	P02A P02B P02C
	21B	X07A X07B
37.6C.11↔		BORP MBOR VAC VBOR
	04	E36A E36B
	05	F01A F01C F31A F31B F31C F31D
	06	G12A G16A G33Z G38A G38B G38C
	07	H33Z
	11	L33Z
	21B	X07A X07B
37.6C.12↔		BORP MBOR VAC VBOR
	04	E36A E36B
	05	F01A F01C F31A F31B F31C F31D
	06	G12A G16A G33Z G38A G38B G38C
	07	H33Z
	11	L33Z
	21B	X07A X07B
37.6C.21↔		BORP MBOR VAC VBOR
	04	E36A E36B
	05	F01A F01C F31A F31B F31C F31D
	06	G12A G16A G33Z G38A G38B G38C
	07	H33Z
	11	L33Z
	21B	X07A X07B
37.6C.31↔		BORP MBOR VAC VBOR
	04	E36A E36B
	05	F01A F01C F31A F31B F31C F31D
	06	G12A G16A G33Z G38A G38B G38C
	07	H33Z
	11	L33Z
	21B	X07A X07B
37.6C.32↔		BORP MBOR VAC VBOR
	04	E36A E36B
	05	F01A F01C F31A F31B F31C F31D
	06	G12A G16A G33Z G38A G38B G38C
	07	H33Z
	11	L33Z
	21B	X07A X07B
37.6C.33↔		BORP MBOR VAC VBOR
	04	E36A E36B
	05	F01A F01C F31A F31B F31C F31D
	06	G12A G16A G33Z G38A G38B G38C
	07	H33Z
	11	L33Z
	21B	X07A X07B
37.6C.71↔		BORP MBOR VAC VBOR
	04	E36A E36B
	05	F01A F01C F31A F31B F31C F31D
	06	G12A G16A G33Z G38A G38B G38C
	07	H33Z
	11	L33Z
	21B	X07A X07B
37.75.00↔	05	F18A F18B
	21B	X06A X06B X06C
37.75.31↔		BORP MBOR VAC VBOR
	04	E36A E36B
	05	F18A F18B
	06	G12A G16A G38A G38B
	21B	X06A X06B X06C
37.75.32↔		BORP MBOR VAC VBOR
	04	E36A E36B
	05	F18A F18B
	06	G12A G16A G38A G38B
	21B	X06A X06B X06C
37.75.33↔		BORP MBOR VAC VBOR

PROC

CHOP	MDC	DRG
	04	E36A E36B
	05	F18A F18B
	06	G12A G16A G38A G38B
	21B	X06A X06B X06C
37.75.34↔		BORP MBOR VAC VBOR
	04	E36A E36B
	05	F18A F18B
	06	G12A G16A G38A G38B
	21B	X06A X06B X06C
37.75.41↔		BORP MBOR VAC VBOR
	04	E36A E36B
	05	F18A F18B
	06	G12A G16A G38A G38B
	21B	X06A X06B X06C
37.75.99↔		BORP MBOR VAC VBOR
	04	E36A E36B
	05	F18A F18B
	06	G12A G16A G38A G38B
	21B	X06A X06B X06C
37.79↔	05	F18A F18B
	09	J02A J02B J03A J03B J04Z J11A J11B
37.7A.00↔		BORP MBOR VAC VBOR
	04	E36A E36B
	05	F01A F01B F01C F01D F01E F01F F03A F03B F04Z F06A F12A F12B F12C F12D F18A F18B F98B
	06	G12A G16A G38A G38B
37.7A.11↔		BORP MBOR VAC VBOR
	04	E36A E36B
	05	F01A F01B F01C F01D F01E F01F F03A F03B F04Z F06A F12A F12B F12C F12D F18A F18B F98B
	06	G12A G16A G38A G38B
37.7A.12↔		BORP MBOR VAC VBOR
	04	E36A E36B
	05	F01A F01B F01C F01D F01E F01F F03A F03B F04Z F06A F12A F12B F12C F12D F18A F18B F98B
	06	G12A G16A G38A G38B
37.7A.13↔		BORP MBOR VAC VBOR
	04	E36A E36B
	05	F01A F01B F01C F01D F01E F01F F03A F03B F04Z F06A F12A F12B F12C F12D F18A F18B F98B
	06	G12A G16A G38A G38B
37.7A.14↔		BORP MBOR VAC VBOR
	04	E36A E36B
	05	F01A F01B F01C F01D F01E F01F F03A F03B F04Z F06A F12A F12B F12C F12D F18A F18B F98B
	06	G12A G16A G38A G38B
37.7A.21↔		BORP MBOR VAC VBOR
	04	E36A E36B
	05	F01A F01B F01C F01D F01E F01F F03A F03B F04Z F06A F12A F12B F12C F12D F18A F18B F98B
	06	G12A G16A G38A G38B
37.7A.22↔		BORP MBOR VAC VBOR
	04	E36A E36B
	05	F01A F01B F01C F01D F01E F01F F03A F03B F04Z F06A F12A F12B F12C F12D F18A F18B F98B
	06	G12A G16A G38A G38B
37.7A.23↔		BORP MBOR VAC VBOR
	04	E36A E36B
	05	F01A F01B F01C F01D F01E F01F F03A F03B F04Z F06A F12A F12B F12C F12D F18A F18B F98B
	06	G12A G16A G38A G38B
37.7A.31↔		BORP MBOR VAC VBOR
	04	E36A E36B
	05	F01A F01B F01C F01D F01E F01F F03A F03B F04Z F06A F12A F12B F12C F12D F18A F18B F98B
	06	G12A G16A G38A G38B
37.7A.32↔		BORP MBOR VAC VBOR
	04	E36A E36B
	05	F01A F01B F01C F01D F01E F01F F03A F03B F04Z F06A F12A F12B F12C F12D F18A F18B F98B
	06	G12A G16A G38A G38B
37.7A.33↔		BORP MBOR VAC VBOR
	04	E36A E36B
	05	F01A F01B F01C F01D F01E F01F F03A F03B F04Z F06A F12A F12B F12C F12D F18A F18B F98B
	06	G12A G16A G38A G38B
37.7A.51↔		BORP MBOR VAC VAC I VAC II VBOR
	04	E36A E36B
	05	F01A F01B F01C F01D F01E F01F F03A F03B F04Z F06A F12A F12B F12C F98B
	06	G12A G16A G38A G38B
37.7A.99↔		BORP MBOR VAC VBOR
	04	E36A E36B
	05	F01A F01B F01C F01D F01E F01F F03A F03B F04Z F06A F12A F12B F12C F12D F18A F18B F98B
	06	G12A G16A G38A G38B
37.7B.11‡↔	01	B60A
	05	F18A F18B
37.7B.12‡↔	01	B60A
	05	F18A F18B
37.7B.13‡↔	01	B60A
	05	F18A F18B
37.7B.14‡↔	01	B60A
	05	F18A F18B
37.7B.21↔	05	F18A F18B
	21B	X06A X06B X06C
37.7B.22↔	05	F18A F18B
	21B	X06A X06B X06C
37.7B.23↔	05	F18A F18B
	21B	X06A X06B X06C
37.7B.31↔	05	F18A F18B
	21B	X06A X06B X06C
37.8A.00↔		BORP KORP MBOR MKOR VAC VBOR VKOR
	01	B04A B04B B04C
	04	E36A E36B
	05	F03A F03B F04Z F06A F12A F12B F12C F12D F17A F17B F98B
	06	G12A G16A G33Z G38A G38B G38C
	07	H33Z
	11	L33Z
	21B	X06A X06B X06C X07A X07B
37.8A.09↔		BORP KORP MBOR MKOR VAC VAC I VAC II VBOR VKOR
	01	B04A B04B B04C
	04	E36A E36B
	05	F03A F03B F04Z F06A F12A F12B

CHOP	MDC	DRG
		F12C F12D F17A F17B F98B
	06	G12A G16A G33Z G38A G38B G38C
	07	H33Z
	11	L33Z
	21B	X06A X06B X06C X07A X07B
37.8A.11↔		BORP KORP MBOR MKOR VAC VAC I VAC II VBOR VKOR
	01	B04A B04B B04C
	04	E36A E36B
	05	F03A F03B F04Z F06A F12A F12B F12C F12D F17A F17B F98B
	06	G12A G16A G33Z G38A G38B G38C
	07	H33Z
	11	L33Z
	21B	X06A X06B X06C X07A X07B
37.8A.21↔		BORP KORP MBOR MKOR VAC VAC I VAC II VBOR VKOR
	01	B04A B04B B04C
	04	E36A E36B
	05	F03A F03B F04Z F06A F12A F12B F12C F12D F17A F98B
	06	G12A G16A G33Z G38A G38B G38C
	07	H33Z
	11	L33Z
	21B	X06A X06B X06C X07A X07B
	Prä	A06A A06B A06C A07A
37.8A.22↔		BORP KORP MBOR MKOR VAC VAC I VAC II VBOR VKOR
	01	B04A B04B B04C
	04	E36A E36B
	05	F03A F03B F04Z F06A F12A F12B F12C F12D F17A F98B
	06	G12A G16A G33Z G38A G38B G38C
	07	H33Z
	11	L33Z
	21B	X06A X06B X06C X07A X07B
	Prä	A06A A06B A06C A07A
37.8A.31↔		BORP KORP MBOR MKOR VAC VAC I VAC II VBOR VKOR
	01	B04A B04B B04C
	04	E36A E36B
	05	F03A F03B F04Z F06A F12A F12B F12C F12D F17A F98B
	06	G12A G16A G33Z G38A G38B G38C
	07	H33Z
	11	L33Z
	21B	X06A X06B X06C X07A X07B
	Prä	A06A A06B A06C A07A
37.8A.42↔		BORP KORP MBOR MKOR VAC VAC I VAC II VBOR VKOR
	01	B04A B04B B04C
	04	E36A E36B
	05	F03A F03B F04Z F06A F12A F12B F12C F17A F17B F98B
	06	G12A G16A G33Z G38A G38B G38C
	07	H33Z
	11	L33Z
	21B	X06A X06B X06C X07A X07B
37.8A.43↔		BORP KORP MBOR MKOR VAC VAC I VAC II VBOR VKOR
	01	B04A B04B B04C
	04	E36A E36B
	05	F03A F03B F04Z F06A F12A F12B F12C F17A F17B F98B
	06	G12A G16A G33Z G38A G38B G38C
	07	H33Z
	11	L33Z
	21B	X06A X06B X06C X07A X07B
37.8A.44↔		BORP KORP MBOR MKOR VAC VAC I VAC II VBOR VKOR
	01	B04A B04B B04C
	04	E36A E36B
	05	F03A F03B F04Z F06A F12A F12B F12C F17A F17B F98B
	06	G12A G16A G33Z G38A G38B G38C
	07	H33Z
	11	L33Z
	21B	X06A X06B X06C X07A X07B
37.8B.00↔		BORP MBOR VAC VAC I VAC II VBOR
	04	E36A E36B
	05	F18A F18B
	06	G12A G16A G38A G38B
	09	J02A J02B J03A J03B J04Z J11A J11B
	21B	X06A X06B X06C
37.8B.09↔		BORP MBOR VAC VAC I VAC II VBOR
	04	E36A E36B
	05	F18A F18B
	06	G12A G16A G38A G38B
	09	J02A J02B J03A J03B J04Z J11A J11B
	21B	X06A X06B X06C
37.8B.11↔		BORP MBOR VAC VAC I VAC II VBOR
	04	E36A E36B
	05	F18A F18B
	06	G12A G16A G38A G38B
	09	J02A J02B J03A J03B J04Z J11A J11B
	21B	X06A X06B X06C
37.8B.21↔		BORP MBOR VAC VAC I VAC II VBOR
	04	E36A E36B
	05	F18A F18B
	06	G12A G16A G38A G38B
	09	J02A J02B J03A J03B J04Z J11A J11B
	21B	X06A X06B X06C
37.8B.22↔		BORP MBOR VAC VAC I VAC II VBOR
	04	E36A E36B
	05	F18A F18B
	06	G12A G16A G38A G38B
	09	J02A J02B J03A J03B J04Z J11A J11B
	21B	X06A X06B X06C
37.8B.31↔		BORP MBOR VAC VAC I VAC II VBOR
	04	E36A E36B
	05	F18A F18B
	06	G12A G16A G38A G38B
	09	J02A J02B J03A J03B J04Z J11A J11B
	21B	X06A X06B X06C
37.8B.42↔		BORP MBOR VAC VAC I VAC II VBOR
	04	E36A E36B
	05	F18A F18B
	06	G12A G16A G38A G38B
	09	J02A J02B J03A J03B J04Z J11A J11B
	21B	X06A X06B X06C
37.8B.43↔		BORP MBOR VAC VAC I VAC II VBOR
	04	E36A E36B
	05	F18A F18B
	06	G12A G16A G38A G38B
	09	J02A J02B J03A J03B J04Z J11A J11B
	21B	X06A X06B X06C
37.8B.44↔		BORP MBOR VAC VAC I VAC II VBOR
	04	E36A E36B
	05	F18A F18B
	06	G12A G16A G38A G38B
	09	J02A J02B J03A J03B J04Z J11A J11B
	21B	X06A X06B X06C
37.8C↔		BORP MBOR VAC

PROC

CHOP	MDC	DRG
		VAC I VAC II VBOR
	01	B04A B04B B04C
	04	E36A E36B
	05	F03A F03B F04Z F12A F12B F12C F12D
	06	G12A G16A G38A G38B
	21B	X06A X06B X06C
37.8D↔		BORP MBOR VAC VBOR
	04	E36A E36B
	05	F18A F18B
	06	G12A G16A G38A G38B
	09	J02A J02B J03A J03B J04Z J11A J11B
	21B	X06A X06B X06C
37.8E.00↔		BORP KORP MBOR MKOR VAC VAC I VAC II VBOR VKOR
	01	B04A B04B B04C
	04	E36A E36B
	05	F01A F01B F01C F01D F01E F01F F02Z
	06	G12A G16A G33Z G38A G38B G38C
	07	H33Z
	11	L33Z
	21B	X06A X06B X06C X07A X07B
	Prä	A06A A06B A06C A07A
37.8E.11↔		BORP KORP MBOR MKOR VAC VAC I VAC II VBOR VKOR
	01	B04A B04B B04C
	04	E36A E36B
	05	F01A F01B F01C F01D F01E F01F F02Z
	06	G12A G16A G33Z G38A G38B G38C
	07	H33Z
	11	L33Z
	21B	X06A X06B X06C X07A X07B
	Prä	A06A A06B A06C A07A
37.8E.12↔		BORP KORP MBOR MKOR VAC VAC I VAC II VBOR VKOR
	01	B04A B04B B04C
	04	E36A E36B
	05	F01A F01B F01C F01D F01E F01F F02Z
	06	G12A G16A G33Z G38A G38B G38C
	07	H33Z
	11	L33Z
	21B	X06A X06B X06C X07A X07B
	Prä	A06A A06B A06C A07A
37.8E.21↔		BORP KORP MBOR MKOR VAC VAC I VAC II VBOR VKOR
	01	B04A B04B B04C
	04	E36A E36B
	05	F01A F01B F01C F01D F01E F01F F02Z
	06	G12A G16A G33Z G38A G38B G38C
	07	H33Z
	11	L33Z
	21B	X06A X06B X06C X07A X07B
	Prä	A06A A06B A06C A07A
37.8E.22↔		BORP KORP MBOR MKOR VAC VAC I VAC II VBOR VKOR
	01	B04A B04B B04C
	04	E36A E36B
	05	F01A F01B F01C F01D F01E F01F F02Z
	06	G12A G16A G33Z G38A G38B G38C
	07	H33Z
	11	L33Z
	21B	X06A X06B X06C X07A X07B
	Prä	A06A A06B A06C A07A
37.8E.31↔		BORP KORP MBOR MKOR VAC VAC I VAC II VBOR VKOR
	01	B04A B04B B04C
	04	E36A E36B
	05	F01A F01B F01C F01D F02Z
	06	G12A G16A G33Z G38A G38B G38C
	07	H33Z
	11	L33Z
	21B	X06A X06B X06C X07A X07B
	Prä	A06A A06B A06C A07A
37.8E.99↔		BORP KORP MBOR MKOR VAC VAC I VAC II VBOR VKOR
	01	B04A B04B B04C
	04	E36A E36B
	05	F01A F01B F01C F01D F01E F01F F02Z
	06	G12A G16A G33Z G38A G38B G38C
	07	H33Z
	11	L33Z
	21B	X06A X06B X06C X07A X07B
	Prä	A06A A06B A06C A07A
37.8F.00↔		BORP MBOR VAC VBOR
	04	E36A E36B
	05	F18A F18B
	06	G12A G16A G38A G38B
	09	J02A J02B J03A J03B J04Z J11A J11B
	21B	X06A X06B X06C
37.8F.11↔		BORP MBOR VAC VBOR
	04	E36A E36B
	05	F18A F18B
	06	G12A G16A G38A G38B
	09	J02A J02B J03A J03B J04Z J11A J11B
	21B	X06A X06B X06C
37.8F.12↔		BORP MBOR VAC VBOR
	04	E36A E36B
	05	F18A F18B
	06	G12A G16A G38A G38B
	09	J02A J02B J03A J03B J04Z J11A J11B
	21B	X06A X06B X06C
37.8F.21↔		BORP MBOR VAC VBOR
	04	E36A E36B
	05	F18A F18B
	06	G12A G16A G38A G38B
	09	J02A J02B J03A J03B J04Z J11A J11B
	21B	X06A X06B X06C
37.8F.22↔		BORP MBOR VAC VBOR
	04	E36A E36B
	05	F18A F18B
	06	G12A G16A G38A G38B
	09	J02A J02B J03A J03B J04Z J11A J11B
	21B	X06A X06B X06C
37.8F.31↔		BORP MBOR VAC VBOR
	04	E36A E36B
	05	F18A F18B
	06	G12A G16A G38A G38B
	09	J02A J02B J03A J03B J04Z J11A J11B
	21B	X06A X06B X06C
37.8F.99↔		BORP MBOR VAC VBOR
	04	E36A E36B
	05	F18A F18B
	06	G12A G16A G38A G38B
	09	J02A J02B J03A J03B J04Z J11A J11B
	21B	X06A X06B X06C
37.90.09↔		BORP MBOR VAC VBOR
	01	B04A B04B B04C
	04	E01A E01B E36A E36B
	05	F01A F01C F12A F19Z F31A F31B F31C F31D F31E F50A F50B F98B
	06	G12A G16A G38A

CHOP	MDC	DRG
		G38B
37.90.10↔		BORP MBOR VAC VAC I VAC II VBOR
	01	B04A B04B B04C
	04	E01A E01B E36A E36B
	05	F01A F01C F12A F19Z F50A F50B F98B
	06	G12A G16A G38A G38B
37.91↔		BORP KORP KP MBOR MKOR VAC VBOR VKOR
	04	E01A E01B E05A E05B E05C E36A E36B
	05	F01A F01C F30Z F31A F31B F31C F31D F31E
	06	G12A G16A G33Z G38A G38B G38C
	07	H33Z
	11	L33Z
	15	P02A P02B P02C
	21B	X07A X07B
37.99.00↔		BORP MBOR VAC VBOR
	04	E36A E36B
	05	F01A F01C F31A F31B F31C F31D F31E
	06	G12A G16A G33Z G38A G38B G38C
	07	H33Z
	09	J02A J02B J03A J03B J04Z J11A J11B
	11	L33Z
	15	P02A P02B P02C
	21B	X06A X06B X06C X07A X07B
37.99.20↔		BORP MBOR VAC VBOR
	04	E01A E01B E05A E05B E05C E36A E36B
	05	F01A F01C F31A F31B F31C F31D F31E
	06	G12A G16A G33Z G38A G38B G38C
	07	H33Z
	09	J02A J02B J03A J03B J04Z J11A J11B
	11	L33Z
	15	P02A P02B P02C
	21B	X06A X06B X06C X07A X07B
37.99.21↔		BORP KORP MBOR MKOR VAC VAC I VAC II VBOR VKOR
	04	E36A E36B
	05	F01A F01C F03B F03C F03D F30Z
	06	G12A G16A G33Z G38A G38B G38C
	07	H33Z
	11	L33Z
	15	P02A P02B P02C
	21B	X07A X07B
	Prä	A06A A06B A06C A07A
37.99.22↔		BORP KORP MBOR MKOR VAC VAC I VAC II VBOR VKOR
	04	E36A E36B
	05	F01A F01C F03B F03C F03D F30Z
	06	G12A G16A G33Z G38A G38B G38C
	07	H33Z
	11	L33Z
	15	P02A P02B P02C
	21B	X07A X07B
	Prä	A06A A06B A06C A07A
37.99.23↔		BORP KORP MBOR MKOR VAC VAC I VAC II VBOR VKOR
	04	E36A E36B
	05	F01A F01C F03B F03C F03D F30Z
	06	G12A G16A G33Z G38A G38B G38C
	07	H33Z
	11	L33Z
	15	P02A P02B P02C
	21B	X07A X07B
	Prä	A06A A06B A06C A07A
37.99.24↔		BORP KORP MBOR MKOR VAC VAC I VAC II VBOR VKOR
	04	E36A E36B
	05	F01A F01C F03B F03C F03D F30Z
	06	G12A G16A G33Z G38A G38B G38C
	07	H33Z
	11	L33Z
	15	P02A P02B P02C
	21B	X07A X07B
	Prä	A06A A06B A06C A07A
37.99.25↔		BORP KORP MBOR MKOR VAC VAC I VAC II VBOR VKOR
	04	E36A E36B
	05	F01A F01C F03B F03C F03D F30Z
	06	G12A G16A G33Z G38A G38B G38C
	07	H33Z
	11	L33Z
	15	P02A P02B P02C
	21B	X07A X07B
	Prä	A06A A06B A06C A07A
37.99.29↔		BORP MBOR VAC VBOR
	04	E01A E01B E05A E05B E05C E36A E36B
	05	F01A F01C F31A F31B F31C F31D F31E
	06	G12A G16A G33Z G38A G38B G38C
	07	H33Z
	09	J02A J02B J03A J03B J04Z J11A J11B
	11	L33Z
	15	P02A P02B P02C
	21B	X06A X06B X06C X07A X07B
37.99.30↔		BORP MBOR VAC VAC I VAC II VBOR
	04	E01A E01B E05A E05B E05C E36A E36B
	05	F01A F01C F30Z F31A F31B F31C F31D F31E
	06	G12A G16A G33Z G38A G38B G38C
	07	H33Z
	09	J02A J02B J03A J03B J04Z J11A J11B
	11	L33Z
	15	P02A P02B P02C
	21B	X06A X06B X06C X07A X07B
37.99.80↔		BORP MBOR VAC VBOR
	04	E01A E01B E05A E05B E05C E36A E36B
	05	F01A F01C F03A F03B F03C F03D F04Z F31A F31B F31C F31D F31E
	06	G12A G16A G38A G38B
	07	H33Z
	09	J02A J02B J03A J03B J04Z J11A J11B
	11	L33Z
	15	P02A P02B P02C
	21B	X06A X06B X06C X07A X07B
37.99.99↔	05	F01A F01C F31A F31B F31C F31D F31E
	06	G33Z G38A G38B G38C
	07	H33Z
	09	J02A J02B J03A J03B J04Z J11A J11B
	11	L33Z
	15	P02A P02B P02C
	21B	X06A X06B X06C X07A X07B
37.9A.00↔		BORP MBOR VAC VBOR
	04	E01A E01B E05A E05B E05C E36A E36B
	05	F01A F01C F30Z F31A F31B F31C F31D F31E
	06	G12A G16A G33Z G38A G38B G38C
	07	H33Z
	11	L33Z

PROC

PROC

CHOP	MDC	DRG
	15	P02A P02B P02C
	21B	X07A X07B
37.9A.11↔		BORP MBOR VAC
		VAC I VAC II VBOR
	04	E01A E01B E05A
		E05B E05C E36A
		E36B
	05	F01A F01C F30Z
		F31A F31B F31C
		F31D F31E
	06	G12A G16A G33Z
		G38A G38B G38C
	07	H33Z
	11	L33Z
	15	P02A P02B P02C
	21B	X07A X07B
37.9A.12↔		BORP MBOR VAC
		VAC I VAC II VBOR
	04	E36A E36B
	05	F18A F18B
	06	G12A G16A G38A
		G38B
	09	J02A J02B J03A
		J03B J04Z J11A
		J11B
	21B	X06A X06B X06C
37.9A.99↔		BORP MBOR VAC
		VAC I VAC II VBOR
	04	E01A E01B E05A
		E05B E05C E36A
		E36B
	05	F01A F01C F30Z
		F31A F31B F31C
		F31D F31E
	06	G12A G16A G33Z
		G38A G38B G38C
	07	H33Z
	11	L33Z
	15	P02A P02B P02C
	21B	X07A X07B
37.9B.11↔		BORP MBOR VAC
		VAC I VAC II VBOR
	04	E36A E36B
	05	F01A F01C F30Z
		F31A F31B F31C
		F31D F31E
	06	G12A G16A G33Z
		G38A G38B G38C
	07	H33Z
	11	L33Z
	15	P02A P02B P02C
	21B	X06A X06B X06C
37.9B.12↔		BORP MBOR VAC
		VAC I VAC II VBOR
	04	E36A E36B
	05	F01A F01C F30Z
		F31A F31B F31C
		F31D F31E
	06	G12A G16A G33Z
		G38A G38B G38C
	07	H33Z
	11	L33Z
	15	P02A P02B P02C
	21B	X06A X06B X06C
37.9B.13↔	05	F01A F01C F04Z
		F06A F06B F06C
		F12A F24A F24B
		F24C F24D F50A
		F50B
37.9C.11‡↔	01	B60A
	05	F03C F03D F04Z
		F06A F06B F06C
		F41A F41B F49A
		F49B F49C F49D
		F49E F49F F50A
		F50B F61A
37.9C.19‡↔	01	B60A
	05	F03C F03D F04Z
		F06A F06B F06C
		F41A F41B F49A
		F49B F49C F49D
		F49E F49F F50A
		F50B F61A
37.9C.21‡↔	01	B60A
	05	F03C F03D F04Z
		F06A F06B F06C
		F41A F41B F49A
		F49B F49C F49D
		F49E F49F F50A
		F50B F61A
37.9C.29‡↔	01	B60A
	05	F03C F03D F04Z
		F06A F06B F06C
		F41A F41B F49A
		F49B F49C F49D
		F49E F49F F50A
		F50B F61A
38.01↔		BORP MBOR VAC
		VBOR
	01	B09A B09B B09C
		B09D
	03	D25A D25B
	04	E36A E36B
	05	F01A F01C F04Z
		F28A F59A F59B
		F59C F59D F59E
		F59F F59G
	06	G12A G16A G38A
		G38B
	08	I15A I15B
	09	J02A J02B J08Z
	10	K09A K09B
	21A	W01A W01B W01C
	21B	X06A X06B X06C
38.03.00‡↔	01	B60A
	05	F59E
38.03.10‡↔	01	B60A
	05	F59E
38.03.11‡↔	01	B60A
	05	F59E
38.03.19‡↔	01	B60A
	05	F59E
38.03.20‡↔	01	B60A
	05	F59E
38.03.21‡↔	01	B60A
	05	F59E
38.03.30‡↔	01	B60A
	05	F59E
38.03.31‡↔	01	B60A
	05	F59E
38.03.38‡↔	01	B60A
	05	F59E
38.03.39‡↔	01	B60A
	05	F59E
38.03.99‡↔	01	B60A
	05	F59E
38.04.00↔	04	E01A E01B E05A
		E05B E05C
	05	F01A F01C F30Z
		F31A F31B F31C
		F31D F31E
	06	G16A G16B G18A
		G18B G19A G19B
		G38A G38B G38C
	07	H33Z
	08	I08B I28A I28B
		I28C
	11	L33Z
	15	P02A P02B P02C
	21B	X06A X06B X06C
		X07A X07B
38.04.10↔		BORP KORP MBOR
		MKOR VAC VBOR
		VKOR
	04	E01A E01B E05A
		E05B E05C E36A
		E36B
	05	F01A F01C F30Z
		F31A F31B F31C
		F31D F31E
	06	G12A G16A G16B
		G18A G18B G19A
		G19B G38A G38B
		G38C
	07	H33Z
	08	I08B I28A I28B
		I28C
	11	L33Z
	15	P02A P02B P02C
	21B	X06A X06B X06C
		X07A X07B
38.04.20↔		BORP KORP MBOR
		MKOR VAC VBOR
		VKOR
	04	E01A E01B E05A
		E05B E05C E36A
		E36B
	05	F01A F01C F30Z
		F31A F31B F31C
		F31D F31E
	06	G12A G16A G16B
		G18A G18B G19A
		G19B G38A G38B
		G38C
	07	H33Z
	08	I08B I28A I28B
		I28C
	11	L33Z
	15	P02A P02B P02C
	21B	X06A X06B X06C
		X07A X07B
38.04.30↔		BORP KORP MBOR
		MKOR VAC VBOR
		VKOR
	04	E01A E01B E05A
		E05B E05C E36A
		E36B
	05	F01A F01C F30Z
		F31A F31B F31C
		F31D F31E
	06	G12A G16A G16B
		G18A G18B G19A
		G19B G38A G38B
		G38C
	07	H33Z
	08	I08B I28A I28B
		I28C
	11	L33Z
	15	P02A P02B P02C
	21B	X06A X06B X06C

CHOP	MDC	DRG
		X07A X07B
38.04.99↔	04	E01A E01B E05A E05B E05C
	05	F01A F01C F30Z F31A F31B F31C F31D F31E
	06	G16A G16B G18A G18B G19A G19B G38A G38B G38C
	07	H33Z
	08	I08B I28A I28B I28C
	11	L33Z
	15	P02A P02B P02C
	21B	X06A X06B X06C X07A X07B
38.05.00↔		BORP MBOR VAC VBOR
	04	E02A E02B E02C E36A E36B
	05	F01A F01C F31A F31B F31C F31D F31E
	06	G12A G16A G16B G18A G18B G19A G19B G38A G38B G38C
	07	H33Z
	08	I08B I28A I28B I28C
	11	L33Z
	15	P02A P02B P02C
	21B	X06A X06B X06C X07A X07B
38.05.10↔		BORP MBOR VAC VBOR
	04	E02A E02B E02C E36A E36B
	05	F01A F01C F31A F31B F31C F31D F31E
	06	G12A G16A G16B G18A G18B G19A G19B G38A G38B G38C
	07	H33Z
	08	I08B I28A I28B I28C
	11	L33Z
	15	P02A P02B P02C
	21B	X06A X06B X06C X07A X07B
38.05.20↔		BORP MBOR VAC VBOR
	04	E02A E02B E02C E36A E36B
	05	F01A F01C F31A F31B F31C F31D F31E
	06	G12A G16A G16B G18A G18B G19A G19B G38A G38B G38C
	07	H33Z
	08	I08B I28A I28B I28C
	11	L33Z
	15	P02A P02B P02C
	21B	X06A X06B X06C X07A X07B
38.05.21↔		BORP MBOR VAC VBOR
	04	E02A E02B E02C E36A E36B
	05	F01A F01C F31A F31B F31C F31D F31E
	06	G12A G16A G16B G18A G18B G19A G19B G38A G38B G38C
	07	H33Z
	08	I08B I28A I28B I28C
	11	L33Z
	15	P02A P02B P02C
	21B	X06A X06B X06C X07A X07B
38.05.29↔		BORP MBOR VAC VBOR
	04	E02A E02B E02C E36A E36B
	05	F01A F01C F31A F31B F31C F31D F31E
	06	G12A G16A G16B G18A G18B G19A G19B G38A G38B G38C
	07	H33Z
	08	I08B I28A I28B I28C
	11	L33Z
	15	P02A P02B P02C
	21B	X06A X06B X06C X07A X07B
38.05.99↔	04	E02A E02B E02C
	05	F01A F01C F31A F31B F31C F31D F31E
	06	G16A G16B G18A G18B G19A G19B G38A G38B G38C
	07	H33Z
	08	I08B I28A I28B I28C
	11	L33Z
	15	P02A P02B P02C
	21B	X06A X06B X06C X07A X07B
38.06.00↔	01	B17A B17B
	05	F01A F01C F04Z F28A F59A F59B F59C F59D F59E F59F
	06	G12A G12B
	07	H06Z
	08	I08B I28A I28B I28C
	10	K09A K09B
	11	L09A L09B
	21B	X06A X06B X06C
38.06.10↔	01	B17A B17B
	05	F01A F01C F04Z F28A F59A F59B F59C F59D F59E F59F
	06	G12A G12B
	07	H06Z
	08	I08B I28A I28B I28C
	10	K09A K09B
	11	L09A L09B
	21B	X06A X06B X06C
38.06.11↔		BORP MBOR VAC VAC I VAC II VBOR
	01	B17A B17B
	04	E36A E36B
	05	F01A F01C F04Z F28A F59A F59B F59C F59D F59E F59F
	06	G12A G16A G16B G18A G18B G19A G19B G38A G38B G38C
	07	H06Z
	08	I08B I28A I28B I28C
	10	K09A K09B
	11	L09A L09B
	21B	X06A X06B X06C
38.06.12↔	01	B17A B17B
	05	F01A F01C F04Z F28A F59A F59B F59C F59D F59E F59F
	06	G12A G12B
	07	H06Z
	08	I08B I28A I28B I28C
	10	K09A K09B
	11	L09A L09B
	21B	X06A X06B X06C
38.06.13↔	01	B17A B17B
	05	F01A F01C F04Z F28A F59A F59B F59C F59D F59E F59F
	06	G12A G12B
	07	H06Z
	08	I08B I28A I28B I28C
	10	K09A K09B
	11	L09A L09B
	21B	X06A X06B X06C
38.06.14↔	01	B17A B17B
	05	F01A F01C F04Z F28A F59A F59B F59C F59D F59E F59F
	06	G12A G12B
	07	H06Z
	08	I08B I28A I28B I28C
	10	K09A K09B
	11	L09A L09B
	21B	X06A X06B X06C
38.06.15↔	01	B17A B17B
	05	F01A F01C F04Z F28A F59A F59B F59C F59D F59E F59F
	06	G12A G12B
	07	H06Z
	08	I08B I28A I28B I28C
	10	K09A K09B
	11	L09A L09B
	21B	X06A X06B X06C
38.06.16↔	01	B17A B17B
	05	F01A F01C F04Z

PROC

PROC

CHOP	MDC	DRG
		F28A F59A F59B
		F59C F59D F59E
		F59F
	06	G12A G12B
	07	H06Z
	08	I08B I28A I28B
		I28C
	10	K09A K09B
	11	L09A L09B
	21B	X06A X06B X06C
38.06.17↔	01	B17A B17B
	05	F01A F01C F04Z
		F28A F59A F59B
		F59C F59D F59E
		F59F
	06	G12A G12B
	07	H06Z
	08	I08B I28A I28B
		I28C
	10	K09A K09B
	11	L09A L09B
	21B	X06A X06B X06C
38.06.18↔	01	B17A B17B
	05	F01A F01C F04Z
		F28A F59A F59B
		F59C F59D F59E
		F59F
	06	G12A G12B
	07	H06Z
	08	I08B I28A I28B
		I28C
	10	K09A K09B
	11	L09A L09B
	21B	X06A X06B X06C
38.06.19↔	01	B17A B17B
	05	F01A F01C F04Z
		F28A F59A F59B
		F59C F59D F59E
		F59F
	06	G12A G12B
	07	H06Z
	08	I08B I28A I28B
		I28C
	10	K09A K09B
	11	L09A L09B
	21B	X06A X06B X06C
38.06.99↔	01	B17A B17B
	05	F01A F01C F04Z
		F28A F59A F59B
		F59C F59D F59E
		F59F
	06	G12A G12B
	07	H06Z
	08	I08B I28A I28B
		I28C
	10	K09A K09B
	11	L09A L09B
	21B	X06A X06B X06C
38.07.00↔	04	E02A E02B E02C
	05	F01A F01C F04Z
		F28A F31A F31B
		F31C F31D F31E
		F59A F59B F59C
		F59D F59E F59F
	06	G12A G12B G16A
		G16B G18A G18B
		G19A G19B G38A
		G38B G38C
	07	H33Z
	08	I08B I28A I28B

CHOP	MDC	DRG
		I28C
	11	L09A L09B L33Z
	15	P02A P02B P02C
	21B	X06A X06B X06C
		X07A X07B
38.07.10↔	04	E02A E02B E02C
	05	F01A F01C F04Z
		F28A F31A F31B
		F31C F31D F31E
		F59A F59B F59C
		F59D F59E F59F
	06	G12A G12B G16A
		G16B G18A G18B
		G19A G19B G38A
		G38B G38C
	07	H33Z
	08	I08B I28A I28B
		I28C
	11	L09A L09B L33Z
	15	P02A P02B P02C
	21B	X06A X06B X06C
		X07A X07B
38.07.11↔		BORP MBOR VAC
		VAC I VAC II VBOR
	04	E02A E02B E02C
		E36A E36B
	05	F01A F01C F04Z
		F28A F30Z F31A
		F31B F31C F31D
		F31E F59A F59B
		F59C F59D F59E
		F59F
	06	G12A G12B G16A
		G16B G18A G18B
		G19A G19B G38A
		G38B G38C
	07	H33Z
	08	I08B I28A I28B
		I28C
	11	L09A L09B L33Z
	15	P02A P02B P02C
	21B	X06A X06B X06C
		X07A X07B
38.07.12↔	04	E02A E02B E02C
	05	F01A F01C F04Z
		F28A F31A F31B
		F31C F31D F31E
		F59A F59B F59C
		F59D F59E F59F
	06	G12A G12B G16A
		G16B G18A G18B
		G19A G19B G38A
		G38B G38C
	07	H33Z
	08	I08B I28A I28B
		I28C
	11	L09A L09B L33Z
	15	P02A P02B P02C
	21B	X06A X06B X06C
		X07A X07B
38.07.19↔	04	E02A E02B E02C
	05	F01A F01C F04Z
		F28A F31A F31B
		F31C F31D F31E
		F59A F59B F59C
		F59D F59E F59F
	06	G12A G12B G16A
		G16B G18A G18B
		G19A G19B G38A
		G38B G38C

CHOP	MDC	DRG
	07	H33Z
	08	I08B I28A I28B
		I28C
	11	L09A L09B L33Z
	15	P02A P02B P02C
	21B	X06A X06B X06C
		X07A X07B
38.07.99↔	04	E01A E01B E05A
		E05B E05C
	05	F01A F01C F04Z
		F28A F31A F31B
		F31C F31D F31E
		F59A F59B F59C
		F59D F59E F59F
	06	G12A G12B G16A
		G16B G18A G18B
		G19A G19B G38A
		G38B G38C
	07	H33Z
	08	I08B I28A I28B
		I28C
	11	L09A L09B L33Z
	15	P02A P02B P02C
	21B	X06A X06B X06C
		X07A X07B
38.08.00‡↔	01	B60A
	05	F59E
38.08.10‡↔	01	B60A
	05	F59E
38.08.11‡↔	01	B60A
	05	F59E
38.08.12‡↔	01	B60A
	05	F59E
38.08.99‡↔	01	B60A
	05	F59E
38.09.00‡↔	01	B60A
	05	F59E
38.09.10‡↔	01	B60A
	05	F59E
38.09.99‡↔	01	B60A
	05	F59E
38.11↔		BORP KORP MBOR
		MKOR VAC VAC I
		VAC II VBOR VKOR
	01	B01A B20A B20B
		B20C B20D
	04	E36A E36B
	05	F01A F01C F04Z
		F28A F59A F59B
		F59C F59D F59E
		F59F
	06	G12A G16A G38A
		G38B
	10	K09A K09B
	21B	X06A X06B X06C
38.12↔		BORP KORP MBOR
		MKOR VAC VAC I
		VAC II VBOR VKOR
	01	B01A B01B B04A
		B04B B04C
	02	C14Z
	03	D12A D12B
	04	E36A E36B
	05	F01A F01C F04Z
		F06A F06B F28A
		F59A F59B F59C
		F59D F59E F59F
	06	G12A G16A G38A
		G38B
	08	I08B I28A I28B

CHOP	MDC	DRG
		I28C
	10	K09A K09B
	21B	X06A X06B X06C
38.13↔		BORP KORP MBOR MKOR VAC VAC I VAC II VBOR VKOR
	04	E36A E36B
	05	F01A F01C F04Z F28A F59A F59B F59C F59D F59E F59F
	06	G12A G16A G38A G38B
	08	I08B I28A I28B I28C
	10	K09A K09B
	21B	X05Z X06A X06B X06C
38.14.10↔		BORP KORP MBOR MKOR VAC VAC I VAC II VBOR VKOR
	04	E36A E36B
	05	F01A F01C F04Z F13A F28A F31A F31B F31C F31D F31E
	06	G12A G12B G16A G16B G18A G38A G38B G38C
	08	I08B I28A I28B I28C
	21B	X06A X06B X06C X07A X07B
38.14.20↔		BORP KORP MBOR MKOR VAC VAC I VAC II VBOR VKOR
	04	E36A E36B
	05	F01A F01C F04Z F13A F28A F31A F31B F31C F31D F31E
	06	G12A G12B G16A G16B G18A G38A G38B G38C
	08	I08B I28A I28B I28C
	21B	X06A X06B X06C X07A X07B
38.14.30↔		BORP KORP MBOR MKOR VAC VAC I VAC II VBOR VKOR
	04	E36A E36B
	05	F01A F01C F04Z F13A F28A F31A F31B F31C F31D F31E
	06	G12A G12B G16A G16B G18A G38A G38B G38C
	08	I08B I28A I28B I28C
	21B	X06A X06B X06C X07A X07B
38.14.99↔		BORP KORP MBOR MKOR VAC VAC I VAC II VBOR VKOR
	04	E36A E36B
	05	F01A F01C F04Z F13A F28A F31A F31B F31C F31D

CHOP	MDC	DRG
		F31E
	06	G12A G12B G16A G16B G18A G38A G38B G38C
	08	I08B I28A I28B I28C
	21B	X06A X06B X06C X07A X07B
38.15.10↔		BORP KORP MBOR MKOR VAC VAC I VAC II VBOR VKOR
	04	E01A E01B E05A E05B E05C E36A E36B
	05	F01A F01C F30Z F31A F31B F31C F31D F31E
	06	G12A G16A G33Z G38A G38B G38C
	07	H33Z
	08	I08B I28A I28B I28C
	11	L33Z
	15	P02A P02B P02C
	21B	X06A X06B X06C X07A X07B
38.15.20↔		BORP KORP MBOR MKOR VAC VAC I VAC II VBOR VKOR
	04	E01A E01B E05A E05B E05C E36A E36B
	05	F01A F01C F30Z F31A F31B F31C F31D F31E
	06	G12A G16A G33Z G38A G38B G38C
	07	H33Z
	08	I08B I28A I28B I28C
	11	L33Z
	15	P02A P02B P02C
	21B	X06A X06B X06C X07A X07B
38.15.30↔		BORP KORP MBOR MKOR VAC VAC I VAC II VBOR VKOR
	04	E01A E01B E05A E05B E05C E36A E36B
	05	F01A F01C F03A F03B F04Z F30Z F31A F31B F31C F31D F31E F36A F36B F36C F36D
	06	G12A G16A G33Z G38A G38B G38C
	07	H33Z
	08	I08B I28A I28B I28C
	11	L33Z
	15	P02A P02B P02C
	21B	X06A X06B X06C X07A X07B
38.15.40↔		BORP KORP MBOR MKOR VAC VAC I VAC II VBOR VKOR
	04	E01A E01B E05A E05B E05C E36A E36B

CHOP	MDC	DRG
	05	F01A F01C F30Z F31A F31B F31C F31D F31E
	06	G12A G16A G33Z G38A G38B G38C
	07	H33Z
	08	I08B I28A I28B I28C
	11	L33Z
	15	P02A P02B P02C
	21B	X06A X06B X06C X07A X07B
38.15.99↔		BORP KORP MBOR MKOR VAC VAC I VAC II VBOR VKOR
	04	E01A E01B E05A E05B E05C E36A E36B
	05	F01A F01C F30Z F31A F31B F31C F31D F31E
	06	G12A G16A G33Z G38A G38B G38C
	07	H33Z
	08	I08B I28A I28B I28C
	11	L33Z
	15	P02A P02B P02C
	21B	X06A X06B X06C X07A X07B
38.16.09↔		BORP KORP MBOR MKOR VAC VAC I VAC II VBOR VKOR
	04	E36A E36B
	05	F01A F01C F04Z F13A F28A F59A F59B F59C F59D F59E F59F
	06	G12A G12B G16A G16B G18A G38A G38B G38C
	07	H01B H06Z H33Z
	08	I08B I28A I28B I28C
	10	K09A K09B
	11	L09A L09B
	21B	X06A X06B X06C X07A X07B
38.16.11↔		BORP KORP MBOR MKOR VAC VAC I VAC II VBOR VKOR
	04	E36A E36B
	05	F01A F01C F04Z F13A F28A F59A F59B F59C F59D F59E F59F
	06	G12A G12B G16A G16B G18A G38A G38B G38C
	07	H01B H06Z H33Z
	08	I08B I28A I28B I28C
	10	K09A K09B
	11	L09A L09B
	21B	X06A X06B X06C X07A X07B
38.16.12↔		BORP KORP MBOR MKOR VAC VAC I VAC II VBOR VKOR
	04	E36A E36B

PROC

PROC

CHOP	MDC	DRG
	05	F01A F01C F04Z F13A F28A F59A F59B F59C F59D F59E F59F
	06	G12A G12B G16A G16B G18A G38A G38B G38C
	07	H01B H06Z H33Z
	08	I08B I28A I28B I28C
	10	K09A K09B
	11	L09A L09B
	21B	X06A X06B X06C X07A X07B
38.16.13↔		BORP KORP MBOR MKOR VAC VAC I VAC II VBOR VKOR
	04	E36A E36B
	05	F01A F01C F04Z F13A F28A F59A F59B F59C F59D F59E F59F
	06	G12A G12B G16A G16B G18A G38A G38B G38C
	07	H01B H06Z H33Z
	08	I08B I28A I28B I28C
	10	K09A K09B
	11	L09A L09B
	21B	X06A X06B X06C X07A X07B
38.16.14↔		BORP KORP MBOR MKOR VAC VAC I VAC II VBOR VKOR
	04	E36A E36B
	05	F01A F01C F04Z F13A F28A F59A F59B F59C F59D F59E F59F
	06	G12A G12B G16A G16B G18A G38A G38B G38C
	07	H01B H06Z H33Z
	08	I08B I28A I28B I28C
	10	K09A K09B
	11	L09A L09B
	21B	X06A X06B X06C X07A X07B
38.16.15↔		BORP KORP MBOR MKOR VAC VAC I VAC II VBOR VKOR
	04	E36A E36B
	05	F01A F01C F04Z F13A F28A F59A F59B F59C F59D F59E F59F
	06	G12A G12B G16A G16B G18A G38A G38B G38C
	07	H01B H06Z H33Z
	08	I08B I28A I28B I28C
	10	K09A K09B
	11	L09A L09B
	21B	X06A X06B X06C X07A X07B
38.16.16↔		BORP KORP MBOR MKOR VAC VAC I VAC II VBOR VKOR
	04	E36A E36B
	05	F01A F01C F04Z F13A F28A F59A F59B F59C F59D F59E F59F
	06	G12A G12B G16A G16B G18A G38A G38B G38C
	07	H01B H06Z H33Z
	08	I08B I28A I28B I28C
	10	K09A K09B
	11	L09A L09B
	21B	X06A X06B X06C X07A X07B
38.16.17↔		BORP KORP MBOR MKOR VAC VAC I VAC II VBOR VKOR
	04	E36A E36B
	05	F01A F01C F04Z F13A F28A F59A F59B F59C F59D F59E F59F
	06	G12A G12B G16A G16B G18A G38A G38B G38C
	07	H01B H06Z H33Z
	08	I08B I28A I28B I28C
	10	K09A K09B
	11	L09A L09B
	21B	X06A X06B X06C X07A X07B
38.16.18↔		BORP KORP MBOR MKOR VAC VAC I VAC II VBOR VKOR
	04	E36A E36B
	05	F01A F01C F04Z F13A F28A F59A F59B F59C F59D F59E F59F
	06	G12A G12B G16A G16B G18A G38A G38B G38C
	07	H01B H06Z H33Z
	08	I08B I28A I28B I28C
	10	K09A K09B
	11	L09A L09B
	21B	X06A X06B X06C X07A X07B
38.16.21↔		BORP KORP MBOR MKOR VAC VAC I VAC II VBOR VKOR
	04	E36A E36B
	05	F01A F01C F04Z F13A F28A F59A F59B F59C F59D F59E F59F
	06	G12A G12B G16A G16B G18A G38A G38B G38C
	07	H01B H06Z H33Z
	08	I08B I28A I28B I28C
	10	K09A K09B
	11	L09A L09B
	21B	X06A X06B X06C X07A X07B
38.18.09↔		BORP MBOR VAC VAC I VAC II VBOR
	04	E36A E36B
	05	F01A F01C F04Z F28A F59A F59B F59C F59D F59E F59F
	06	G12A G16A G38A G38B
	08	I08B I28A I28B I28C
	10	K09A K09B
	21B	X04Z X06A X06B X06C
38.18.10↔		BORP KORP MBOR MKOR VAC VAC I VAC II VBOR VKOR
	04	E36A E36B
	05	F01A F01C F04Z F28A F59A F59B F59C F59D F59E F59F
	06	G12A G16A G38A G38B
	08	I08B I28A I28B I28C
	10	K09A K09B
	21B	X04Z X06A X06B X06C
38.18.11↔		BORP KORP MBOR MKOR VAC VAC I VAC II VBOR VKOR
	04	E36A E36B
	05	F01A F01C F04Z F28A F59A F59B F59C F59D F59E F59F
	06	G12A G16A G38A G38B
	08	I08B I28A I28B I28C
	10	K09A K09B
	21B	X04Z X06A X06B X06C
38.18.12↔		BORP KORP MBOR MKOR VAC VAC I VAC II VBOR VKOR
	04	E36A E36B
	05	F01A F01C F04Z F28A F59A F59B F59C F59D F59E F59F
	06	G12A G16A G38A G38B
	08	I08B I28A I28B I28C
	10	K09A K09B
	21B	X04Z X06A X06B X06C
38.18.21↔		BORP MBOR VAC VAC I VAC II VBOR
	04	E36A E36B
	05	F01A F01C F04Z F28A F59A F59B F59C F59D F59E F59F
	06	G12A G16A G38A G38B
	08	I08B I28A I28B I28C

CHOP	MDC	DRG
	10	K09A K09B
	21B	X04Z X06A X06B X06C
38.21↔	01	B17A B17B
	02	C14Z
	05	F01A F01C F04Z F28A F59A F59B F59C F59D F59E F59F F59G
	08	I28A I28B I28C
	09	J02A J02B J03A J03B J04Z J11A J11B
	10	K09A K09B
38.31↔		BORP KORP MBOR MKOR VAC VAC I VAC II VBOR VKOR
	01	B01A B02A B02B B20A B20B B20C B20D
	03	D25A D25B
	04	E36A E36B
	06	G12A G16A G33Z G38A G38B G38C
	07	H33Z
	08	I15A I15B
	09	J02A J02B J08Z
	11	L33Z
	21A	W01A W01B W01C
	21B	X06A X06B X06C X07A X07B
38.32.10↔		BORP KORP MBOR MKOR VAC VAC I VAC II VBOR VKOR
	01	B01A B01B B04A B04B B04C
	03	D12A
	04	E36A E36B
	05	F01A F01C F04Z F06A F06B F28A F59A F59B F59C F59D F59E F59F
	06	G12A G16A G38A G38B
	08	I08B I28A I28B I28C
	21B	X06A X06B X06C
38.32.21↔		BORP MBOR VAC VAC I VAC II VBOR
	01	B01A B01B B04A B04B B04C
	03	D12A
	04	E36A E36B
	05	F01A F01C F04Z F06A F06B F28A F59A F59B F59C F59D F59E F59F
	06	G12A G16A G38A G38B
	08	I08B I28A I28B I28C
	21B	X06A X06B X06C
38.32.22↔		BORP MBOR VAC VAC I VAC II VBOR
	01	B01A B01B B04A B04B B04C
	03	D12A
	04	E36A E36B
	05	F01A F01C F04Z F06A F06B F28A F59A F59B F59C F59D F59E F59F
	06	G12A G16A G38A G38B
	08	I08B I28A I28B I28C
	21B	X06A X06B X06C
38.32.99↔		BORP MBOR VAC VAC I VAC II VBOR
	01	B01A B01B B04A B04B B04C
	03	D12A
	04	E36A E36B
	05	F01A F01C F04Z F06A F06B F28A F59A F59B F59C F59D F59E F59F
	06	G12A G16A G38A G38B
	08	I08B I28A I28B I28C
	21B	X06A X06B X06C
38.33.00↔		BORP MBOR VAC VAC I VAC II VBOR
	04	E36A E36B
	05	F01A F01C F04Z F28A F59A F59B F59C F59D F59E F59F
	06	G12A G16A G38A G38B
	08	I08B I28A I28B I28C
	21B	X06A X06B X06C
38.33.10↔		BORP MBOR VAC VAC I VAC II VBOR
	04	E36A E36B
	05	F01A F01C F04Z F28A F59A F59B F59C F59D F59E F59F
	06	G12A G16A G38A G38B
	08	I08B I28A I28B I28C
	21B	X06A X06B X06C
38.33.11↔		BORP MBOR VAC VAC I VAC II VBOR
	04	E36A E36B
	05	F01A F01C F04Z F28A F59A F59B F59C F59D F59E F59F
	06	G12A G16A G38A G38B
	08	I08B I28A I28B I28C
	21B	X06A X06B X06C
38.33.12↔		BORP MBOR VAC VAC I VAC II VBOR
	04	E36A E36B
	05	F01A F01C F04Z F28A F59A F59B F59C F59D F59E F59F
	06	G12A G16A G38A G38B
	08	I08B I28A I28B I28C
	21B	X06A X06B X06C
38.33.13↔		BORP MBOR VAC VAC I VAC II VBOR
	04	E36A E36B
	05	F01A F01C F04Z F28A F59A F59B F59C F59D F59E F59F
	06	G12A G16A G38A G38B
	08	I08B I28A I28B I28C
	21B	X06A X06B X06C
38.33.14↔		BORP MBOR VAC VAC I VAC II VBOR
	04	E36A E36B
	05	F01A F01C F04Z F28A F59A F59B F59C F59D F59E F59F
	06	G12A G16A G38A G38B
	08	I08B I28A I28B I28C
	21B	X06A X06B X06C
38.33.20↔		BORP MBOR VAC VAC I VAC II VBOR
	04	E36A E36B
	05	F01A F01C F04Z F28A F59A F59B F59C F59D F59E F59F
	06	G12A G16A G38A G38B
	08	I08B I28A I28B I28C
	21B	X06A X06B X06C
38.33.21↔		BORP MBOR VAC VAC I VAC II VBOR
	04	E36A E36B
	05	F01A F01C F04Z F28A F59A F59B F59C F59D F59E F59F
	06	G12A G16A G38A G38B
	08	I08B I28A I28B I28C
	21B	X06A X06B X06C
38.33.22↔		BORP MBOR VAC VAC I VAC II VBOR
	04	E36A E36B
	05	F01A F01C F04Z F28A F59A F59B F59C F59D F59E F59F
	06	G12A G16A G38A G38B
	08	I08B I28A I28B I28C
	21B	X06A X06B X06C
38.33.23↔		BORP MBOR VAC VAC I VAC II VBOR
	04	E36A E36B
	05	F01A F01C F04Z F28A F59A F59B F59C F59D F59E F59F
	06	G12A G16A G38A G38B
	08	I08B I28A I28B

PROC

PROC

CHOP	MDC	DRG
		I28C
	21B	X06A X06B X06C
38.33.99↔		BORP MBOR VAC
		VAC I VAC II VBOR
	04	E36A E36B
	05	F01A F01C F04Z
		F28A F59A F59B
		F59C F59D F59E
		F59F
	06	G12A G16A G38A
		G38B
	08	I08B I28A I28B
		I28C
	21B	X06A X06B X06C
38.34.10↔		BORP KORP MBOR
		MKOR VAC VAC I
		VAC II VBOR VKOR
	04	E01A E01B E05A
		E05B E05C E36A
		E36B
	05	F01A F01C F04Z
		F13A F28A F30Z
		F31A F31B F31C
		F31D F31E
	06	G12A G12B G16A
		G16B G18A G33Z
		G38A G38B G38C
	07	H33Z
	08	I08B I28A I28B
		I28C
	11	L33Z
	15	P02A P02B P02C
	21B	X06A X06B X06C
		X07A X07B
38.34.20↔		BORP KORP MBOR
		MKOR VAC VAC I
		VAC II VBOR VKOR
	04	E01A E01B E05A
		E05B E05C E36A
		E36B
	05	F01A F01C F04Z
		F13A F28A F30Z
		F31A F31B F31C
		F31D F31E
	06	G12A G12B G16A
		G16B G18A G33Z
		G38A G38B G38C
	07	H33Z
	08	I08B I28A I28B
		I28C
	11	L33Z
	15	P02A P02B P02C
	21B	X06A X06B X06C
		X07A X07B
38.34.30↔		BORP KORP MBOR
		MKOR VAC VAC I
		VAC II VBOR VKOR
	04	E01A E01B E05A
		E05B E05C E36A
		E36B
	05	F01A F01C F04Z
		F13A F28A F30Z
		F31A F31B F31C
		F31D F31E
	06	G12A G12B G16A
		G16B G18A G33Z
		G38A G38B G38C
	07	H33Z
	08	I08B I28A I28B
		I28C
	11	L33Z
	15	P02A P02B P02C
	21B	X06A X06B X06C
		X07A X07B
38.34.99↔		BORP KORP MBOR
		MKOR VAC VAC I
		VAC II VBOR VKOR
	04	E01A E01B E05A
		E05B E05C E36A
		E36B
	05	F01A F01C F04Z
		F13A F28A F30Z
		F31A F31B F31C
		F31D F31E
	06	G12A G12B G16A
		G16B G18A G33Z
		G38A G38B G38C
	07	H33Z
	08	I08B I28A I28B
		I28C
	11	L33Z
	15	P02A P02B P02C
	21B	X06A X06B X06C
		X07A X07B
38.35.00↔		BORP KORP MBOR
		MKOR VAC VAC I
		VAC II VBOR VKOR
	04	E01A E01B E05A
		E05B E05C E36A
		E36B
	05	F01A F01C F30Z
		F31A F31B F31C
		F31D F31E
	06	G12A G16A G16B
		G18A G18B G19A
		G19B G33Z G38A
		G38B G38C
	07	H33Z
	08	I08B I28A I28B
		I28C
	11	L33Z
	15	P02A P02B P02C
	21B	X06A X06B X06C
		X07A X07B
38.35.10↔		BORP KORP MBOR
		MKOR VAC VAC I
		VAC II VBOR VKOR
	04	E01A E01B E05A
		E05B E05C E36A
		E36B
	05	F01A F01C F30Z
		F31A F31B F31C
		F31D F31E
	06	G12A G16A G16B
		G18A G18B G19A
		G19B G33Z G38A
		G38B G38C
	07	H33Z
	08	I08B I28A I28B
		I28C
	11	L33Z
	15	P02A P02B P02C
	21B	X06A X06B X06C
		X07A X07B
38.35.11↔		BORP KORP MBOR
		MKOR VAC VAC I
		VAC II VBOR VKOR
	04	E01A E01B E05A
		E05B E05C E36A
		E36B
	05	F01A F01C F30Z
		F31A F31B F31C
		F31D F31E
	06	G12A G16A G16B
		G18A G18B G19A
		G19B G33Z G38A
		G38B G38C
	07	H33Z
	08	I08B I28A I28B
		I28C
	11	L33Z
	15	P02A P02B P02C
	21B	X06A X06B X06C
		X07A X07B
38.35.12↔		BORP KORP MBOR
		MKOR VAC VAC I
		VAC II VBOR VKOR
	04	E01A E01B E05A
		E05B E05C E36A
		E36B
	05	F01A F01C F30Z
		F31A F31B F31C
		F31D F31E
	06	G12A G16A G16B
		G18A G18B G19A
		G19B G33Z G38A
		G38B G38C
	07	H33Z
	08	I08B I28A I28B
		I28C
	11	L33Z
	15	P02A P02B P02C
	21B	X06A X06B X06C
		X07A X07B
38.35.13↔		BORP KORP MBOR
		MKOR VAC VAC I
		VAC II VBOR VKOR
	04	E01A E01B E05A
		E05B E05C E36A
		E36B
	05	F01A F01C F30Z
		F31A F31B F31C
		F31D F31E
	06	G12A G16A G16B
		G18A G18B G19A
		G19B G33Z G38A
		G38B G38C
	07	H33Z
	08	I08B I28A I28B
		I28C
	11	L33Z
	15	P02A P02B P02C
	21B	X06A X06B X06C
		X07A X07B
38.35.19↔		BORP KORP MBOR
		MKOR VAC VAC I
		VAC II VBOR VKOR
	04	E01A E01B E05A
		E05B E05C E36A
		E36B
	05	F01A F01C F30Z
		F31A F31B F31C
		F31D F31E
	06	G12A G16A G16B
		G18A G18B G19A
		G19B G33Z G38A
		G38B G38C
	07	H33Z
	08	I08B I28A I28B
		I28C

CHOP	MDC	DRG
	11	L33Z
	15	P02A P02B P02C
	21B	X06A X06B X06C X07A X07B
38.35.20↔		BORP KORP MBOR MKOR VAC VAC I VAC II VBOR VKOR
	04	E01A E01B E05A E05B E05C E36A E36B
	05	F01A F01C F30Z F31A F31B F31C F31D F31E
	06	G12A G16A G16B G18A G18B G19A G19B G33Z G38A G38B G38C
	07	H33Z
	08	I08B I28A I28B I28C
	11	L33Z
	15	P02A P02B P02C
	21B	X06A X06B X06C X07A X07B
38.35.21↔		BORP KORP MBOR MKOR VAC VAC I VAC II VBOR VKOR
	04	E01A E01B E05A E05B E05C E36A E36B
	05	F01A F01C F30Z F31A F31B F31C F31D F31E
	06	G12A G16A G16B G18A G18B G19A G19B G33Z G38A G38B G38C
	07	H33Z
	08	I08B I28A I28B I28C
	11	L33Z
	15	P02A P02B P02C
	21B	X06A X06B X06C X07A X07B
38.35.22↔		BORP KORP MBOR MKOR VAC VAC I VAC II VBOR VKOR
	04	E01A E01B E05A E05B E05C E36A E36B
	05	F01A F01C F30Z F31A F31B F31C F31D F31E
	06	G12A G16A G16B G18A G18B G19A G19B G33Z G38A G38B G38C
	07	H33Z
	08	I08B I28A I28B I28C
	11	L33Z
	15	P02A P02B P02C
	21B	X06A X06B X06C X07A X07B
38.35.23↔		BORP KORP MBOR MKOR VAC VAC I VAC II VBOR VKOR
	04	E01A E01B E05A E05B E05C E36A E36B
	05	F01A F01C F30Z F31A F31B F31C F31D F31E
	06	G12A G16A G16B G18A G18B G19A G19B G33Z G38A G38B G38C
	07	H33Z
	08	I08B I28A I28B I28C
	11	L33Z
	15	P02A P02B P02C
	21B	X06A X06B X06C X07A X07B
38.35.28↔		BORP KORP MBOR MKOR VAC VAC I VAC II VBOR VKOR
	04	E01A E01B E05A E05B E05C E36A E36B
	05	F01A F01C F30Z F31A F31B F31C F31D F31E
	06	G12A G16A G16B G18A G18B G19A G19B G33Z G38A G38B G38C
	07	H33Z
	08	I08B I28A I28B I28C
	11	L33Z
	15	P02A P02B P02C
	21B	X06A X06B X06C X07A X07B
38.35.29↔		BORP KORP MBOR MKOR VAC VAC I VAC II VBOR VKOR
	04	E01A E01B E05A E05B E05C E36A E36B
	05	F01A F01C F30Z F31A F31B F31C F31D F31E
	06	G12A G16A G16B G18A G18B G19A G19B G33Z G38A G38B G38C
	07	H33Z
	08	I08B I28A I28B I28C
	11	L33Z
	15	P02A P02B P02C
	21B	X06A X06B X06C X07A X07B
38.35.99↔		BORP KORP MBOR MKOR VAC VAC I VAC II VBOR VKOR
	04	E01A E01B E05A E05B E05C E36A E36B
	05	F01A F01C F30Z F31A F31B F31C F31D F31E
	06	G12A G16A G16B G18A G18B G19A G19B G33Z G38A G38B G38C
	07	H33Z
	08	I08B I28A I28B I28C
	11	L33Z
	15	P02A P02B P02C
	21B	X06A X06B X06C X07A X07B
38.36.11↔		BORP KORP MBOR MKOR VAC VAC I VAC II VBOR VKOR
	04	E36A E36B
	05	F01A F01C F04Z F13A F28A F31A F31B F31C F31D F31E F59A F59B F59C F59D F59E F59F F59G
	06	G12A G16A G16B G18A G19A G19B G33Z G38A G38B G38C
	07	H01B H06Z H33Z
	08	I08B I28A I28B I28C
	11	L09A L09B L33Z
	21B	X06A X06B X06C X07A X07B
38.36.12↔		BORP KORP MBOR MKOR VAC VAC I VAC II VBOR VKOR
	04	E36A E36B
	05	F01A F01C F04Z F13A F28A F31A F31B F31C F31D F31E F59A F59B F59C F59D F59E F59F F59G
	06	G12A G16A G16B G18A G19A G19B G33Z G38A G38B G38C
	07	H01B H06Z H33Z
	08	I08B I28A I28B I28C
	11	L09A L09B L33Z
	21B	X06A X06B X06C X07A X07B
38.36.13↔		BORP KORP MBOR MKOR VAC VAC I VAC II VBOR VKOR
	04	E36A E36B
	05	F01A F01C F04Z F13A F28A F31A F31B F31C F31D F31E F59A F59B F59C F59D F59E F59F F59G
	06	G12A G16A G16B G18A G19A G19B G33Z G38A G38B G38C
	07	H01B H06Z H33Z
	08	I08B I28A I28B I28C
	11	L09A L09B L33Z
	21B	X06A X06B X06C X07A X07B
38.36.14↔		BORP KORP MBOR MKOR VAC VAC I VAC II VBOR VKOR
	04	E36A E36B
	05	F01A F01C F04Z F13A F28A F31A

PROC

PROC

CHOP	MDC	DRG
		F31B F31C F31D
		F31E F59A F59B
		F59C F59D F59E
		F59F F59G
	06	G12A G16A G16B
		G18A G19A G19B
		G33Z G38A G38B
		G38C
	07	H01B H06Z H33Z
	08	I08B I28A I28B
		I28C
	11	L09A L09B L33Z
	21B	X06A X06B X06C
		X07A X07B
38.36.15↔		BORP KORP MBOR
		MKOR VAC VAC I
		VAC II VBOR VKOR
	04	E36A E36B
	05	F01A F01C F04Z
		F13A F28A F31A
		F31B F31C F31D
		F31E F59A F59B
		F59C F59D F59E
		F59F F59G
	06	G12A G16A G16B
		G18A G19A G19B
		G33Z G38A G38B
		G38C
	07	H01B H06Z H33Z
	08	I08B I28A I28B
		I28C
	11	L09A L09B L33Z
	21B	X06A X06B X06C
		X07A X07B
38.36.16↔		BORP KORP MBOR
		MKOR VAC VAC I
		VAC II VBOR VKOR
	04	E36A E36B
	05	F01A F01C F04Z
		F13A F28A F31A
		F31B F31C F31D
		F31E F59A F59B
		F59C F59D F59E
		F59F F59G
	06	G12A G16A G16B
		G18A G19A G19B
		G33Z G38A G38B
		G38C
	07	H01B H06Z H33Z
	08	I08B I28A I28B
		I28C
	11	L09A L09B L33Z
	21B	X06A X06B X06C
		X07A X07B
38.36.17↔		BORP KORP MBOR
		MKOR VAC VAC I
		VAC II VBOR VKOR
	04	E36A E36B
	05	F01A F01C F04Z
		F13A F28A F31A
		F31B F31C F31D
		F31E F59A F59B
		F59C F59D F59E
		F59F F59G
	06	G12A G16A G16B
		G18A G19A G19B
		G33Z G38A G38B
		G38C
	07	H01B H06Z H33Z
	08	I08B I28A I28B
		I28C
	11	L09A L09B L33Z
	21B	X06A X06B X06C
		X07A X07B
38.36.19↔		BORP KORP MBOR
		MKOR VAC VAC I
		VAC II VBOR VKOR
	04	E36A E36B
	05	F01A F01C F04Z
		F13A F28A F31A
		F31B F31C F31D
		F31E F59A F59B
		F59C F59D F59E
		F59F F59G
	06	G12A G16A G16B
		G18A G19A G19B
		G33Z G38A G38B
		G38C
	07	H01B H06Z H33Z
	08	I08B I28A I28B
		I28C
	11	L09A L09B L33Z
	21B	X06A X06B X06C
		X07A X07B
38.36.99↔		BORP KORP MBOR
		MKOR VAC VAC I
		VAC II VBOR VKOR
	04	E36A E36B
	05	F01A F01C F04Z
		F13A F28A F31A
		F31B F31C F31D
		F31E F59A F59B
		F59C F59D F59E
		F59F F59G
	06	G12A G16A G16B
		G18A G19A G19B
		G33Z G38A G38B
		G38C
	07	H01B H06Z H33Z
	08	I08B I28A I28B
		I28C
	11	L09A L09B L33Z
	21B	X06A X06B X06C
		X07A X07B
38.37.11↔		BORP KORP MBOR
		MKOR VAC VAC I
		VAC II VBOR VKOR
	04	E36A E36B
	05	F01A F01C F04Z
		F13A F28A F31A
		F31B F31C F31D
		F31E F59A F59B
		F59C F59D F59E
		F59F F59G
	06	G12A G12B G16A
		G16B G18A G38A
		G38B G38C
	07	H01B H33Z
	08	I08B I28A I28B
		I28C
	11	L09A L09B
	21B	X06A X06B X06C
		X07A X07B
38.37.12↔		BORP KORP MBOR
		MKOR VAC VAC I
		VAC II VBOR VKOR
	04	E36A E36B
	05	F01A F01C F04Z
		F13A F28A F31A
		F31B F31C F31D
		F31E F59A F59B
		F59C F59D F59E
		F59F F59G
	06	G12A G12B G16A
		G16B G18A G38A
		G38B G38C
	07	H01B H33Z
	08	I08B I28A I28B
		I28C
	11	L09A L09B
	21B	X06A X06B X06C
		X07A X07B
38.37.19↔		BORP KORP MBOR
		MKOR VAC VAC I
		VAC II VBOR VKOR
	04	E36A E36B
	05	F01A F01C F04Z
		F13A F28A F31A
		F31B F31C F31D
		F31E F59A F59B
		F59C F59D F59E
		F59F F59G
	06	G12A G12B G16A
		G16B G18A G38A
		G38B G38C
	07	H01B H33Z
	08	I08B I28A I28B
		I28C
	11	L09A L09B
	21B	X06A X06B X06C
		X07A X07B
38.37.99↔		BORP KORP MBOR
		MKOR VAC VAC I
		VAC II VBOR VKOR
	04	E36A E36B
	05	F01A F01C F04Z
		F13A F28A F31A
		F31B F31C F31D
		F31E F59A F59B
		F59C F59D F59E
		F59F F59G
	06	G12A G12B G16A
		G16B G18A G38A
		G38B G38C
	07	H01B H33Z
	08	I08B I28A I28B
		I28C
	11	L09A L09B
	21B	X06A X06B X06C
		X07A X07B
38.38.10↔		BORP MBOR VAC
		VAC I VAC II VBOR
	04	E36A E36B
	05	F01A F01C F04Z
		F13A F13B F13C
		F28A F59A F59B
		F59C F59D F59E
		F59F F59G
	06	G12A G16A G38A
		G38B
	08	I08B I28A I28B
		I28C
	21B	X04Z X07A X07B
38.38.11↔		BORP KORP MBOR
		MKOR VAC VAC I
		VAC II VBOR VKOR
	04	E36A E36B
	05	F01A F01C F04Z
		F13A F13B F13C
		F28A F59A F59B

CHOP	MDC	DRG
		F59C F59D F59E F59F F59G
	06	G12A G16A G38A G38B
	08	I08B I28A I28B I28C
	21B	X04Z X07A X07B
38.38.12↔		BORP KORP MBOR MKOR VAC VAC I VAC II VBOR VKOR
	04	E36A E36B
	05	F01A F01C F04Z F13A F13B F13C F28A F59A F59B F59C F59D F59E F59F F59G
	06	G12A G16A G38A G38B
	08	I08B I28A I28B I28C
	21B	X04Z X07A X07B
38.38.99↔		BORP KORP MBOR MKOR VAC VAC I VAC II VBOR VKOR
	04	E36A E36B
	05	F01A F01C F04Z F13A F13B F13C F28A F59A F59B F59C F59D F59E F59F F59G
	06	G12A G16A G38A G38B
	08	I08B I28A I28B I28C
	21B	X04Z X07A X07B
38.39.00↔		BORP MBOR VAC VAC I VAC II VBOR
	04	E36A E36B
	05	F39A F39B
	06	G12A G16A G38A G38B
	08	I08B I28A I28B I28C
	21B	X04Z
38.39.10↔		BORP MBOR VAC VAC I VAC II VBOR
	04	E36A E36B
	05	F39A F39B
	06	G12A G16A G38A G38B
	08	I08B I28A I28B I28C
	21B	X04Z
38.39.99↔		BORP MBOR VAC VAC I VAC II VBOR
	04	E36A E36B
	05	F39A F39B
	06	G12A G16A G38A G38B
	08	I08B I28A I28B I28C
	21B	X04Z
38.41↔		BORP KORP MBOR MKOR VAC VAC I VAC II VBOR VKOR
	01	B01A B02A B02B B20A B20B B20C B20D
	04	E36A E36B
	05	F01A F01C F04Z

CHOP	MDC	DRG
		F28A F31A F31B F31C F31D F31E
	06	G12A G16A G33Z G38A G38B G38C
	07	H33Z
	11	L33Z
	21B	X07A X07B
38.42↔		BORP MBOR VAC VAC I VAC II VBOR
	01	B01A B01B B04A B04B B04C B17A B17B
	03	D12A
	04	E36A E36B
	05	F01A F01C F04Z F06A F06B F28A F59A F59B F59C F59D F59E F59F
	06	G12A G16A G38A G38B
	08	I08B I28A I28B I28C
	21B	X06A X06B X06C
38.43.00↔		BORP MBOR VAC VBOR
	04	E36A E36B
	05	F01A F01C F04Z F28A F59A F59B F59C F59D F59E F59F
	06	G12A G16A G38A G38B
	08	I08B I28A I28B I28C
	21B	X06A X06B X06C
38.43.10↔		BORP KORP MBOR MKOR VAC VAC I VAC II VBOR VKOR
	04	E36A E36B
	05	F01A F01C F04Z F28A F59A F59B F59C F59D F59E F59F
	06	G12A G16A G38A G38B
	08	I08B I28A I28B I28C
	21B	X06A X06B X06C
38.43.11↔		BORP KORP MBOR MKOR VAC VAC I VAC II VBOR VKOR
	04	E36A E36B
	05	F01A F01C F04Z F28A F59A F59B F59C F59D F59E F59F
	06	G12A G16A G38A G38B
	08	I08B I28A I28B I28C
	21B	X06A X06B X06C
38.43.20↔		BORP KORP MBOR MKOR VAC VAC I VAC II VBOR VKOR
	04	E36A E36B
	05	F01A F01C F04Z F28A F59A F59B F59C F59D F59E F59F
	06	G12A G16A G38A

CHOP	MDC	DRG
		G38B
	08	I08B I28A I28B I28C
	21B	X06A X06B X06C
38.43.21↔		BORP KORP MBOR MKOR VAC VAC I VAC II VBOR VKOR
	04	E36A E36B
	05	F01A F01C F04Z F28A F59A F59B F59C F59D F59E F59F
	06	G12A G16A G38A G38B
	08	I08B I28A I28B I28C
	21B	X06A X06B X06C
38.43.28↔		BORP KORP MBOR MKOR VAC VAC I VAC II VBOR VKOR
	04	E36A E36B
	05	F01A F01C F04Z F28A F59A F59B F59C F59D F59E F59F
	06	G12A G16A G38A G38B
	08	I08B I28A I28B I28C
	21B	X06A X06B X06C
38.43.29↔		BORP KORP MBOR MKOR VAC VAC I VAC II VBOR VKOR
	04	E36A E36B
	05	F01A F01C F04Z F28A F59A F59B F59C F59D F59E F59F
	06	G12A G16A G38A G38B
	08	I08B I28A I28B I28C
	21B	X06A X06B X06C
38.43.99↔		BORP KORP MBOR MKOR VAC VAC I VAC II VBOR VKOR
	04	E36A E36B
	05	F01A F01C F04Z F28A F59A F59B F59C F59D F59E F59F
	06	G12A G16A G38A G38B
	08	I08B I28A I28B I28C
	21B	X06A X06B X06C
38.44.10↔		BORP KORP MBOR MKOR VAC VAC I VAC II VBOR VKOR
	04	E36A E36B
	05	F01A F01C F04Z F13A F28A F31A F31B F31C F31D
	06	G12A G12B G16A G16B G18A G38A G38B G38C
	08	I08B I28A I28B I28C
	11	L09A L09B
	21B	X06A X06B X06C

PROC

PROC

CHOP	MDC	DRG
		X07A X07B
38.44.11↔		BORP KORP MBOR MKOR VAC VAC I VAC II VBOR VKOR
	04	E36A E36B
	05	F01A F01C F04Z F13A F28A F31A F31B F31C F31D
	06	G12A G12B G16A G16B G18A G38A G38B G38C
	08	I08B I28A I28B I28C
	11	L09A L09B
	21B	X06A X06B X06C X07A X07B
38.44.12↔		BORP KORP MBOR MKOR VAC VAC I VAC II VBOR VKOR
	04	E36A E36B
	05	F01A F01C F04Z F13A F28A F31A F31B F31C F31D
	06	G12A G12B G16A G16B G18A G38A G38B G38C
	08	I08B I28A I28B I28C
	11	L09A L09B
	21B	X06A X06B X06C X07A X07B
38.44.99↔		BORP KORP MBOR MKOR VAC VAC I VAC II VBOR VKOR
	04	E36A E36B
	05	F01A F01C F04Z F13A F28A F31A F31B F31C F31D
	06	G12A G12B G16A G16B G18A G38A G38B G38C
	08	I08B I28A I28B I28C
	11	L09A L09B
	21B	X06A X06B X06C X07A X07B
38.45.00↔		BORP KORP MBOR MKOR VAC VAC I VAC II VBOR VKOR
	04	E01A E01B E05A E05B E05C E36A E36B
	05	F01A F01C F03C F03D F04Z F06A F06B F13A F31A F31B F31C F31D
	06	G12A G16A G16B G18A G18B G19A G19B G33Z G38A G38B G38C
	07	H33Z
	08	I08B I28A I28B I28C
	11	L33Z
	21B	X06A X06B X06C X07A X07B
38.45.10↔		BORP KORP MBOR MKOR VAC VAC I VAC II VBOR VKOR
	04	E01A E01B E05A E05B E05C E36A E36B
	05	F01A F01C F03C F03D F04Z F06A F06B F13A F31A F31B F31C F31D
	06	G12A G16A G16B G18A G18B G19A G19B G33Z G38A G38B G38C
	07	H33Z
	08	I08B I28A I28B I28C
	11	L33Z
	21B	X06A X06B X06C X07A X07B
38.45.12↔		BORP KORP MBOR MKOR VAC VAC I VAC II VBOR VKOR
	04	E01A E01B E05A E05B E05C E36A E36B
	05	F01A F01C F03C F03D F04Z F06A F06B F13A F31A F31B F31C F31D
	06	G12A G16A G16B G18A G18B G19A G19B G33Z G38A G38B G38C
	07	H33Z
	08	I08B I28A I28B I28C
	11	L33Z
	21B	X06A X06B X06C X07A X07B
38.45.13↔		BORP KORP MBOR MKOR VAC VAC I VAC II VBOR VKOR
	04	E01A E01B E05A E05B E05C E36A E36B
	05	F01A F01C F03C F03D F04Z F06A F06B F13A F31A F31B F31C F31D F36A F36B F36C F36D F36E
	06	G12A G16A G16B G18A G18B G19A G19B G33Z G38A G38B G38C
	07	H33Z
	08	I08B I28A I28B I28C
	11	L33Z
	21B	X06A X06B X06C X07A X07B
38.45.14↔		BORP KORP MBOR MKOR VAC VAC I VAC II VBOR VKOR
	04	E01A E01B E05A E05B E05C E36A E36B
	05	F01A F01C F03C F03D F04Z F06A F06B F13A F31A F31B F31C F31D F36A F36B F36C F36D F36E
	06	G12A G16A G16B G18A G18B G19A G19B G33Z G38A G38B G38C
	07	H33Z
	08	I08B I28A I28B I28C
	11	L33Z
	21B	X06A X06B X06C X07A X07B
38.45.15↔		BORP KORP MBOR MKOR VAC VAC I VAC II VBOR VKOR
	04	E01A E01B E05A E05B E05C E36A E36B
	05	F01A F01C F03C F03D F04Z F06A F06B F13A F31A F31B F31C F31D
	06	G12A G16A G16B G18A G18B G19A G19B G33Z G38A G38B G38C
	07	H33Z
	08	I08B I28A I28B I28C
	11	L33Z
	21B	X06A X06B X06C X07A X07B
38.45.16↔		BORP KORP MBOR MKOR VAC VAC I VAC II VBOR VKOR
	04	E01A E01B E05A E05B E05C E36A E36B
	05	F01A F01C F03C F03D F04Z F06A F06B F13A F31A F31B F31C F31D
	06	G12A G16A G16B G18A G18B G19A G19B G33Z G38A G38B G38C
	07	H33Z
	08	I08B I28A I28B I28C
	11	L33Z
	21B	X06A X06B X06C X07A X07B
38.45.17↔		BORP KORP MBOR MKOR VAC VAC I VAC II VBOR VKOR
	04	E01A E01B E05A E05B E05C E36A E36B
	05	F01A F01C F03C F03D F04Z F06A F06B F13A F31A F31B F31C F31D
	06	G12A G16A G16B G18A G18B G19A G19B G33Z G38A G38B G38C
	07	H33Z
	08	I08B I28A I28B I28C
	11	L33Z
	21B	X06A X06B X06C X07A X07B

CHOP	MDC	DRG
38.45.19↔		BORP KORP MBOR MKOR VAC VAC I VAC II VBOR VKOR
	04	E01A E01B E05A E05B E05C E36A E36B
	05	F01A F01C F03C F03D F04Z F06A F06B F13A F31A F31B F31C F31D
	06	G12A G16A G16B G18A G18B G19A G19B G33Z G38A G38B G38C
	07	H33Z
	08	I08B I28A I28B I28C
	11	L33Z
	21B	X06A X06B X06C X07A X07B
38.45.20↔		BORP KORP MBOR MKOR VAC VAC I VAC II VBOR VKOR
	04	E01A E01B E05A E05B E05C E36A E36B
	05	F01A F01C F03C F03D F04Z F06A F06B F13A F31A F31B F31C F31D
	06	G12A G16A G16B G18A G18B G19A G19B G33Z G38A G38B G38C
	07	H33Z
	08	I08B I28A I28B I28C
	11	L33Z
	21B	X06A X06B X06C X07A X07B
38.45.21↔		BORP KORP MBOR MKOR VAC VAC I VAC II VBOR VKOR
	04	E01A E01B E05A E05B E05C E36A E36B
	05	F01A F01C F03C F03D F04Z F06A F06B F13A F31A F31B F31C F31D
	06	G12A G16A G16B G18A G18B G19A G19B G33Z G38A G38B G38C
	07	H33Z
	08	I08B I28A I28B I28C
	11	L33Z
	21B	X06A X06B X06C X07A X07B
38.45.22↔		BORP KORP MBOR MKOR VAC VAC I VAC II VBOR VKOR
	04	E01A E01B E05A E05B E05C E36A E36B
	05	F01A F01C F03C F03D F04Z F06A F06B F13A F31A F31B F31C F31D
	06	G12A G16A G16B G18A G18B G19A G19B G33Z G38A G38B G38C
	07	H33Z
	08	I08B I28A I28B I28C
	11	L33Z
	21B	X06A X06B X06C X07A X07B
38.45.29↔		BORP KORP MBOR MKOR VAC VAC I VAC II VBOR VKOR
	04	E01A E01B E05A E05B E05C E36A E36B
	05	F01A F01C F03C F03D F04Z F06A F06B F13A F31A F31B F31C F31D
	06	G12A G16A G16B G18A G18B G19A G19B G33Z G38A G38B G38C
	07	H33Z
	08	I08B I28A I28B I28C
	11	L33Z
	21B	X06A X06B X06C X07A X07B
38.45.30↔		BORP KORP MBOR MKOR VAC VAC I VAC II VBOR VKOR
	04	E01A E01B E05A E05B E05C E36A E36B
	05	F01A F01C F03C F03D F04Z F06A F06B F13A F31A F31B F31C F31D
	06	G12A G16A G16B G18A G18B G19A G19B G33Z G38A G38B G38C
	07	H33Z
	08	I08B I28A I28B I28C
	11	L33Z
	21B	X06A X06B X06C X07A X07B
38.45.31↔		BORP KORP MBOR MKOR VAC VAC I VAC II VBOR VKOR
	04	E01A E01B E05A E05B E05C E36A E36B
	05	F01A F01C F03C F03D F04Z F06A F06B F13A F31A F31B F31C F31D
	06	G12A G16A G16B G18A G18B G19A G19B G33Z G38A G38B G38C
	07	H33Z
	08	I08B I28A I28B I28C
	11	L33Z
	21B	X06A X06B X06C X07A X07B
38.45.38↔		BORP KORP MBOR MKOR VAC VAC I VAC II VBOR VKOR
	04	E01A E01B E05A E05B E05C E36A E36B
	05	F01A F01C F03C F03D F04Z F06A F06B F13A F31A F31B F31C F31D
	06	G12A G16A G16B G18A G18B G19A G19B G33Z G38A G38B G38C
	07	H33Z
	08	I08B I28A I28B I28C
	11	L33Z
	21B	X06A X06B X06C X07A X07B
38.45.39↔		BORP KORP MBOR MKOR VAC VAC I VAC II VBOR VKOR
	04	E01A E01B E05A E05B E05C E36A E36B
	05	F01A F01C F03C F03D F04Z F06A F06B F13A F31A F31B F31C F31D
	06	G12A G16A G16B G18A G18B G19A G19B G33Z G38A G38B G38C
	07	H33Z
	08	I08B I28A I28B I28C
	11	L33Z
	21B	X06A X06B X06C X07A X07B
38.45.99↔		BORP KORP MBOR MKOR VAC VAC I VAC II VBOR VKOR
	04	E01A E01B E05A E05B E05C E36A E36B
	05	F01A F01C F03C F03D F04Z F06A F06B F13A F31A F31B F31C F31D
	06	G12A G16A G16B G18A G18B G19A G19B G33Z G38A G38B G38C
	07	H33Z
	08	I08B I28A I28B I28C
	11	L33Z
	21B	X06A X06B X06C X07A X07B
38.46↔		BORP KORP MBOR MKOR VAC VAC I VAC II VBOR VKOR
	04	E36A E36B
	05	F01A F01C F04Z F13A F28A F31A F31B F31C F31D F31E
	06	G12A G12B G16A G16B G18A G38A

PROC

PROC

CHOP	MDC	DRG
		G38B G38C
	07	H01B H06Z H33Z
	08	I08B I28A I28B I28C
	11	L09A L09B
	21B	X06A X06B X06C X07A X07B
38.47.11↔		BORP KORP MBOR MKOR VAC VAC I VAC II VBOR VKOR
	04	E01A E01B E05A E05B E05C E36A E36B
	05	F01A F01C F04Z F13A F28A F31A F31B F31C F31D F31E
	06	G12A G12B G16A G16B G18A G19A G19B G33Z G38A G38B G38C
	07	H01B H33Z
	08	I08B I28A I28B I28C
	11	L09A L09B L33Z
	21B	X06A X06B X06C X07A X07B
38.47.12↔		BORP KORP MBOR MKOR VAC VAC I VAC II VBOR VKOR
	04	E01A E01B E05A E05B E05C E36A E36B
	05	F01A F01C F04Z F13A F28A F31A F31B F31C F31D F31E
	06	G12A G12B G16A G16B G18A G19A G19B G33Z G38A G38B G38C
	07	H01B H33Z
	08	I08B I28A I28B I28C
	11	L09A L09B L33Z
	21B	X06A X06B X06C X07A X07B
38.47.19↔		BORP KORP MBOR MKOR VAC VAC I VAC II VBOR VKOR
	04	E01A E01B E05A E05B E05C E36A E36B
	05	F01A F01C F04Z F13A F28A F31A F31B F31C F31D F31E
	06	G12A G12B G16A G16B G18A G19A G19B G33Z G38A G38B G38C
	07	H01B H33Z
	08	I08B I28A I28B I28C
	11	L09A L09B L33Z
	21B	X06A X06B X06C X07A X07B
38.47.99↔		BORP KORP MBOR MKOR VAC VAC I VAC II VBOR VKOR
	04	E01A E01B E05A E05B E05C E36A E36B
	05	F01A F01C F04Z F13A F28A F31A F31B F31C F31D F31E
	06	G12A G12B G16A G16B G18A G19A G19B G33Z G38A G38B G38C
	07	H01B H33Z
	08	I08B I28A I28B I28C
	11	L09A L09B L33Z
	21B	X06A X06B X06C X07A X07B
38.48.10↔		BORP KORP MBOR MKOR VAC VAC I VAC II VBOR VKOR
	04	E36A E36B
	05	F01A F01C F04Z F13A F13B F13C F28A F59A F59B F59C F59D F59E F59F
	06	G12A G16A G38A G38B
	08	I08B I28A I28B I28C
	21B	X04Z X07A X07B
38.48.11↔		BORP KORP MBOR MKOR VAC VAC I VAC II VBOR VKOR
	04	E36A E36B
	05	F01A F01C F04Z F13A F13B F13C F28A F59A F59B F59C F59D F59E F59F
	06	G12A G16A G38A G38B
	08	I08B I28A I28B I28C
	21B	X04Z X07A X07B
38.48.12↔		BORP KORP MBOR MKOR VAC VAC I VAC II VBOR VKOR
	04	E36A E36B
	05	F01A F01C F04Z F13A F13B F13C F28A F59A F59B F59C F59D F59E F59F
	06	G12A G16A G38A G38B
	08	I08B I28A I28B I28C
	21B	X04Z X07A X07B
38.48.13↔		BORP KORP MBOR MKOR VAC VAC I VAC II VBOR VKOR
	04	E36A E36B
	05	F01A F01C F04Z F13A F13B F13C F28A F59A F59B F59C F59D F59E F59F
	06	G12A G16A G38A G38B
	08	I08B I28A I28B I28C
	21B	X04Z X07A X07B
38.48.99↔		BORP KORP MBOR MKOR VAC VAC I VAC II VBOR VKOR
	04	E36A E36B
	05	F01A F01C F04Z F13A F13B F13C F28A F59A F59B F59C F59D F59E F59F
	06	G12A G16A G38A G38B
	08	I08B I28A I28B I28C
	21B	X04Z X07A X07B
38.49.00↔		BORP MBOR VAC VAC I VAC II VBOR
	04	E36A E36B
	05	F39A F39B
	06	G12A G16A G38A G38B
	08	I08B I28A I28B I28C
	21B	X04Z
38.49.10↔		BORP MBOR VAC VAC I VAC II VBOR
	04	E36A E36B
	05	F59A F59B F59C F59D F59E F59F
	06	G12A G16A G38A G38B
	08	I08B I28A I28B I28C
	21B	X04Z
38.49.99↔		BORP MBOR VAC VAC I VAC II VBOR
	04	E36A E36B
	05	F59A F59B F59C F59D F59E F59F
	06	G12A G16A G38A G38B
	08	I08B I28A I28B I28C
	21B	X04Z
38.50↔	05	F39A F39B
	08	I08B I28A I28B I28C
38.52↔	05	F39A F39B
	08	I08B I28A I28B I28C
38.53↔	05	F39A F39B
	08	I08B I28A I28B I28C
38.55↔	05	F39A F39B
	08	I08B I28A I28B I28C
38.57↔	05	F39A F39B
	08	I08B I28A I28B I28C
	12	M06Z M09A M09B M37Z
38.59.00↔	05	F39A F39B
	08	I08B I28A I28B I28C
38.59.10↔	05	F39A F39B
	08	I08B I28A I28B I28C
38.59.20↔	05	F39A F39B

CHOP	MDC	DRG
	08	I08B I28A I28B I28C
38.59.21↔	05	F39A F39B
	08	I08B I28A I28B I28C
38.59.22↔	05	F39A F39B
	08	I08B I28A I28B I28C
38.59.23↔	05	F39A F39B
	08	I08B I28A I28B I28C
38.59.30↔	05	F39A F39B
	08	I08B I28A I28B I28C
38.59.31↔	05	F39A F39B
	08	I08B I28A I28B I28C
38.59.32↔	05	F39A F39B
	08	I08B I28A I28B I28C
38.59.33↔	05	F39A F39B
	08	I08B I28A I28B I28C
38.59.40↔	05	F39A F39B
	08	I08B I28A I28B I28C
38.59.50‡↔	01	B60A
	05	F39A F39B
38.59.51‡↔	01	B60A
	05	F39A F39B
38.59.52‡↔	01	B60A
	05	F39A F39B
38.59.59‡↔	01	B60A
	05	F39A F39B
38.59.99↔	05	F39A F39B
	08	I08B I28A I28B I28C
38.61↔	01	B01A B02A B02B B20A B20B B20C B20D
	03	D25A D25B
	05	F01A F01C F04Z F28A F59A F59B F59C F59D F59E F59F F59G
	07	H33Z
	08	I15A I15B
	09	J02A J02B J08Z
	11	L33Z
	21A	W01A W01B W01C
	21B	X06A X06B X06C X07A X07B
38.64.00↔	04	E01A E01B E05A E05B E05C
	05	F01A F01C F04Z F28A F31A F31B F31C F31D F31E F59A F59B F59C F59D F59E F59F
	06	G12A G12B G16A G16B G18A G18B G19A G19B G33Z G38A G38B G38C
	07	H33Z
	08	I08B I28A I28B I28C
	11	L09A L09B L33Z
	21B	X06A X06B X06C X07A X07B
38.64.10↔	04	E01A E01B E05A E05B E05C
	05	F01A F01C F04Z F28A F31A F31B F31C F31D F31E F59A F59B F59C F59D F59E F59F
	06	G12A G12B G16A G16B G18A G18B G19A G19B G33Z G38A G38B G38C
	07	H33Z
	08	I08B I28A I28B I28C
	11	L09A L09B L33Z
	21B	X06A X06B X06C X07A X07B
38.64.20↔	04	E01A E01B E05A E05B E05C
	05	F01A F01C F04Z F28A F31A F31B F31C F31D F31E F59A F59B F59C F59D F59E F59F
	06	G12A G12B G16A G16B G18A G18B G19A G19B G33Z G38A G38B G38C
	07	H33Z
	08	I08B I28A I28B I28C
	11	L09A L09B L33Z
	21B	X06A X06B X06C X07A X07B
38.64.99↔	04	E01A E01B E05A E05B E05C
	05	F01A F01C F04Z F28A F31A F31B F31C F31D F31E F59A F59B F59C F59D F59E F59F
	06	G12A G12B G16A G16B G18A G18B G19A G19B G33Z G38A G38B G38C
	07	H33Z
	08	I08B I28A I28B I28C
	11	L09A L09B L33Z
	21B	X06A X06B X06C X07A X07B
38.65.10↔	04	E02A E02B E02C
	05	F01A F01C F04Z F28A F31A F31B F31C F31D F31E F59A F59B F59C F59D F59E F59F
	06	G16A G16B G18A G18B G19A G19B G38A G38B G38C
	07	H33Z
	08	I08B I28A I28B I28C
	11	L33Z
	14	O02A O02B
	21B	X06A X06B X06C X07A X07B
38.65.20↔	04	E02A E02B E02C
	05	F01A F01C F04Z F28A F31A F31B F31C F31D F31E F59A F59B F59C F59D F59E F59F
	06	G16A G16B G18A G18B G19A G19B G38A G38B G38C
	07	H33Z
	08	I08B I28A I28B I28C
	11	L33Z
	21B	X06A X06B X06C X07A X07B
38.65.21↔	04	E01A E01B E02A E02B E02C E05A E05B E05C
	05	F01A F01C F04Z F28A F31A F31B F31C F31D F31E F59A F59B F59C F59D F59E F59F
	06	G16A G16B G18A G18B G19A G19B G33Z G38A G38B G38C
	07	H33Z
	08	I08B I28A I28B I28C
	11	L33Z
	14	O02A O02B
	21B	X06A X06B X06C X07A X07B
38.65.22↔	04	E01A E01B E02A E02B E02C E05A E05B E05C
	05	F01A F01C F04Z F28A F31A F31B F31C F31D F31E F59A F59B F59C F59D F59E F59F
	06	G16A G16B G18A G18B G19A G19B G38A G38B G38C
	07	H33Z
	08	I08B I28A I28B I28C
	11	L33Z
	14	O02A O02B
	21B	X06A X06B X06C X07A X07B
38.65.29↔	04	E02A E02B E02C
	05	F01A F01C F04Z F28A F31A F31B F31C F31D F31E F59A F59B F59C F59D F59E F59F
	06	G16A G16B G18A G18B G19A G19B G38A G38B G38C
	07	H33Z
	08	I08B I28A I28B I28C
	11	L33Z
	14	O02A O02B
	21B	X06A X06B X06C X07A X07B
38.65.99↔	04	E02A E02B E02C
	05	F01A F01C F04Z F28A F31A F31B F31C F31D F31E F59A F59B F59C F59D F59E F59F

PROC

CHOP	MDC	DRG
	06	G16A G16B G18A G18B G19A G19B G38A G38B G38C
	07	H33Z
	08	I08B I28A I28B I28C
	11	L33Z
	14	O02A O02B
	21B	X06A X06B X06C X07A X07B
38.66.00↔		BORP MBOR VAC VBOR
	01	B17A B17B
	04	E36A E36B
	05	F01A F01C F04Z F28A F59A F59B F59C F59D F59E F59F
	06	G12A G12B G16A G38A G38B
	08	I08B I28A I28B I28C
	10	K09A K09B
	11	L09A L09B
	21B	X06A X06B X06C
38.66.10↔		BORP MBOR VAC VBOR
	01	B17A B17B
	04	E36A E36B
	05	F01A F01C F04Z F28A F59A F59B F59C F59D F59E F59F
	06	G12A G12B G16A G38A G38B
	08	I08B I28A I28B I28C
	10	K09A K09B
	11	L09A L09B
	21B	X06A X06B X06C
38.66.11↔		BORP MBOR VAC VBOR
	01	B17A B17B
	04	E36A E36B
	05	F01A F01C F04Z F28A F59A F59B F59C F59D F59E F59F
	06	G12A G12B G16A G38A G38B
	08	I08B I28A I28B I28C
	10	K09A K09B
	11	L09A L09B
	21B	X06A X06B X06C
38.66.12↔		BORP MBOR VAC VBOR
	01	B17A B17B
	04	E36A E36B
	05	F01A F01C F04Z F28A F59A F59B F59C F59D F59E F59F
	06	G12A G12B G16A G38A G38B
	08	I08B I28A I28B I28C
	10	K09A K09B
	11	L09A L09B
	21B	X06A X06B X06C
38.66.13↔		BORP MBOR VAC VBOR
	01	B17A B17B
	04	E36A E36B
	05	F01A F01C F04Z F28A F59A F59B F59C F59D F59E F59F
	06	G12A G12B G16A G38A G38B
	08	I08B I28A I28B I28C
	10	K09A K09B
	11	L09A L09B
	21B	X06A X06B X06C
38.66.14↔		BORP MBOR VAC VBOR
	01	B17A B17B
	04	E36A E36B
	05	F01A F01C F04Z F28A F59A F59B F59C F59D F59E F59F
	06	G12A G12B G16A G38A G38B
	08	I08B I28A I28B I28C
	10	K09A K09B
	11	L09A L09B
	21B	X06A X06B X06C
38.66.15↔		BORP MBOR VAC VBOR
	01	B17A B17B
	04	E36A E36B
	05	F01A F01C F04Z F28A F59A F59B F59C F59D F59E F59F
	06	G12A G12B G16A G38A G38B
	08	I08B I28A I28B I28C
	10	K09A K09B
	11	L09A L09B
	21B	X06A X06B X06C
38.66.16↔		BORP MBOR VAC VBOR
	01	B17A B17B
	04	E36A E36B
	05	F01A F01C F04Z F28A F59A F59B F59C F59D F59E F59F
	06	G12A G12B G16A G38A G38B
	08	I08B I28A I28B I28C
	10	K09A K09B
	11	L09A L09B
	21B	X06A X06B X06C
38.66.17↔		BORP MBOR VAC VBOR
	01	B17A B17B
	04	E36A E36B
	05	F01A F01C F04Z F28A F59A F59B F59C F59D F59E F59F
	06	G12A G12B G16A G38A G38B
	08	I08B I28A I28B I28C
	10	K09A K09B
	11	L09A L09B
	21B	X06A X06B X06C
38.66.18↔		BORP MBOR VAC VBOR
	01	B17A B17B
	04	E36A E36B
	05	F01A F01C F04Z F28A F59A F59B F59C F59D F59E F59F
	06	G12A G12B G16A G38A G38B
	08	I08B I28A I28B I28C
	10	K09A K09B
	11	L09A L09B
	21B	X06A X06B X06C
38.66.19↔		BORP MBOR VAC VBOR
	01	B17A B17B
	04	E36A E36B
	05	F01A F01C F04Z F28A F59A F59B F59C F59D F59E F59F
	06	G12A G12B G16A G38A G38B
	08	I08B I28A I28B I28C
	10	K09A K09B
	11	L09A L09B
	21B	X06A X06B X06C
38.66.99↔		BORP MBOR VAC VBOR
	01	B17A B17B
	04	E36A E36B
	05	F01A F01C F04Z F28A F59A F59B F59C F59D F59E F59F
	06	G12A G12B G16A G38A G38B
	08	I08B I28A I28B I28C
	10	K09A K09B
	11	L09A L09B
	21B	X06A X06B X06C
38.67.00↔	04	E02A E02B E02C
	05	F01A F01C F04Z F28A F59A F59B F59C F59D F59E F59F
	06	G12A G12B
	08	I08B I28A I28B I28C
	11	L09A L09B
	21B	X04Z X05Z X06A X06B X06C
38.67.10↔	04	E02A E02B E02C
	05	F01A F01C F04Z F28A F59A F59B F59C F59D F59E F59F
	06	G12A G12B
	08	I08B I28A I28B I28C
	11	L09A L09B

CHOP	MDC	DRG
	21B	X04Z X05Z X06A X06B X06C
38.67.11↔	04	E02A E02B E02C
	05	F01A F01C F04Z F28A F59A F59B F59C F59D F59E F59F
	06	G12A G12B
	08	I08B I28A I28B I28C
	11	L09A L09B
	14	O02A O02B
	21B	X04Z X05Z X06A X06B X06C
38.67.12↔	04	E02A E02B E02C
	05	F01A F01C F04Z F28A F59A F59B F59C F59D F59E F59F
	06	G12A G12B
	08	I08B I28A I28B I28C
	11	L09A L09B
	14	O02A O02B
	21B	X04Z X05Z X06A X06B X06C
38.67.19↔	04	E02A E02B E02C
	05	F01A F01C F04Z F28A F59A F59B F59C F59D F59E F59F
	06	G12A G12B
	08	I08B I28A I28B I28C
	11	L09A L09B
	14	O02A O02B
	21B	X04Z X05Z X06A X06B X06C
38.67.99↔	04	E02A E02B E02C
	05	F01A F01C F04Z F28A F59A F59B F59C F59D F59E F59F
	06	G12A G12B
	08	I08B I28A I28B I28C
	11	L09A L09B
	14	O02A O02B
	21B	X04Z X05Z X06A X06B X06C
38.68.00↔		BORP MBOR VAC VBOR
	04	E36A E36B
	05	F01A F01C F04Z F28A F59A F59B F59C F59D F59E F59F
	06	G12A G16A G38A G38B
	08	I08B I28A I28B I28C
	10	K09A K09B
	21B	X04Z
38.68.10↔		BORP MBOR VAC VBOR
	04	E36A E36B
	05	F01A F01C F04Z F28A F59A F59B F59C F59D F59E F59F
	06	G12A G16A G38A G38B
	08	I08B I28A I28B I28C
	10	K09A K09B
	21B	X04Z
38.68.20↔		BORP MBOR VAC VBOR
	04	E36A E36B
	05	F01A F01C F04Z F28A F59A F59B F59C F59D F59E F59F
	06	G12A G16A G38A G38B
	08	I08B I28A I28B I28C
	10	K09A K09B
	21B	X04Z
38.68.99↔		BORP MBOR VAC VBOR
	04	E36A E36B
	05	F01A F01C F04Z F28A F59A F59B F59C F59D F59E F59F
	06	G12A G16A G38A G38B
	08	I08B I28A I28B I28C
	10	K09A K09B
	21B	X04Z
38.69↔	05	F39A F39B
	08	I08B I28A I28B I28C
	21B	X04Z X05Z X06A X06B X06C
38.6A‡↔	01	B60A
	05	F06B F06C
38.7X.00‡↔	01	B60A
	05	F75A F75B F75C F75D
38.7X.10↔		BORP MBOR VAC VBOR
	04	E02A E02B E36A E36B
	05	F01A F01C F04Z F28A F59A F59B F59C F59D F59E F59F
	06	G12A G16A G16B G18A G38A G38B G38C
	08	I08B I28A I28B I28C
	21B	X06A X06B X06C
38.7X.11↔		BORP MBOR VAC VAC I VAC II VBOR
	04	E02A E02B E36A E36B
	05	F01A F01C F04Z F28A F59A F59B F59C F59D F59E F59F
	06	G12A G16A G16B G18A G38A G38B G38C
	08	I08B I28A I28B I28C
	14	O02A O02B
	21B	X06A X06B X06C
38.7X.12↔		BORP MBOR VAC VAC I VAC II VBOR
	04	E02A E02B E36A E36B
	05	F01A F01C F04Z F28A F59A F59B F59C F59D F59E F59F
	06	G12A G16A G16B G18A G38A G38B G38C
	08	I08B I28A I28B I28C
	14	O02A O02B
	21B	X06A X06B X06C
38.7X.13↔		BORP MBOR VAC VAC I VAC II VBOR
	04	E02A E02B E36A E36B
	05	F01A F01C F04Z F28A F59A F59B F59C F59D F59E F59F
	06	G12A G16A G16B G18A G38A G38B G38C
	08	I08B I28A I28B I28C
	14	O02A O02B
	21B	X06A X06B X06C
38.7X.19↔		BORP MBOR VAC VAC I VAC II VBOR
	04	E02A E02B E36A E36B
	05	F01A F01C F04Z F28A F59A F59B F59C F59D F59E F59F
	06	G12A G16A G16B G18A G38A G38B G38C
	08	I08B I28A I28B I28C
	14	O02A O02B
	21B	X06A X06B X06C
38.7X.20‡↔	01	B60A
	05	F75A F75B F75C F75D
38.7X.21↔	01	B01A B01B B04A B04B B04C
	03	D12A
	04	E02A E02B
	05	F01A F01C F04Z F21A F21B F21C F28A F59A F59B F59C F59D F59E F59F F59G
	06	G12A G12B
	07	H06Z
	08	I28A I28B
	09	J11A
	10	K09A K09B
	11	L09A L09B
	12	M06Z M37Z
	13	N11A N11B
	14	O02A O02B
	21B	X06A X06B X06C
38.7X.23‡↔	01	B60A
	05	F75A F75B F75C

PROC

CHOP	MDC	DRG
		F75D
38.7X.29‡↔	01	B60A
	05	F75A F75B F75C F75D
38.7X.99‡↔	01	B60A
	05	F75A F75B F75C F75D
38.81↔	01	B09A B09B B09C B09D
	03	D25A D25B
	05	F01A F01C F04Z F28A F59A F59B F59C F59D F59E F59F
	07	H33Z
	08	I15A I15B
	09	J02A J02B J08Z
	11	L33Z
	21A	W01A W01B W01C
	21B	X06A X06B X06C X07A X07B
38.82.00↔	01	B17A B17B
	03	D12A D12B
	05	F01A F01C F04Z F28A F59A F59B F59C F59D F59E F59F
	08	I08B I28A I28B I28C
	21B	X06A X06B X06C
38.82.10↔	01	B17A B17B
	03	D12A D12B
	05	F01A F01C F04Z F28A F59A F59B F59C F59D F59E F59F
	08	I08B I28A I28B I28C
	21B	X06A X06B X06C
38.82.20↔	01	B17A B17B
	03	D12A D12B
	05	F01A F01C F04Z F28A F59A F59B F59C F59D F59E F59F
	08	I08B I28A I28B I28C
	21B	X06A X06B X06C
38.82.21↔	01	B17A B17B
	03	D12A D12B
	05	F01A F01C F04Z F28A F59A F59B F59C F59D F59E F59F
	08	I08B I28A I28B I28C
	21B	X06A X06B X06C
38.82.22↔	01	B17A B17B
	03	D12A D12B
	05	F01A F01C F04Z F28A F59A F59B F59C F59D F59E F59F
	08	I08B I28A I28B I28C
	21B	X06A X06B X06C
38.82.29↔	01	B17A B17B
	03	D12A D12B
	05	F01A F01C F04Z F28A F59A F59B F59C F59D F59E F59F
	08	I08B I28A I28B I28C
	21B	X06A X06B X06C
38.82.99↔	01	B17A B17B
	03	D12A D12B
	05	F01A F01C F04Z F28A F59A F59B F59C F59D F59E F59F
	08	I08B I28A I28B I28C
	21B	X06A X06B X06C
38.83.11↔	05	F01A F01C F04Z F28A F59A F59B F59C F59D F59E F59F
	08	I08B I28A I28B I28C
	10	K09A K09B
	21B	X05Z X06A X06B X06C
38.83.19↔	05	F01A F01C F04Z F28A F59A F59B F59C F59D F59E F59F
	08	I08B I28A I28B I28C
	10	K09A K09B
	21B	X05Z X06A X06B X06C
38.83.21↔	05	F01A F01C F04Z F28A F59A F59B F59C F59D F59E F59F
	08	I08B I28A I28B I28C
	10	K09A K09B
	21B	X05Z X06A X06B X06C
38.84.00↔		BORP KORP MBOR MKOR VAC VAC I VAC II VBOR VKOR
	04	E01A E01B E05A E05B E05C E36A E36B
	05	F01A F01C F04Z F28A F59A F59B F59C F59D F59E F59F
	06	G02A G02B G12A G16A G16B G18A G33Z G38A G38B G38C
	07	H33Z
	08	I08B I28A I28B I28C
	10	K09A K09B
	11	L33Z
	21B	X06A X06B X07A X07B
38.84.09↔		BORP KORP MBOR MKOR VAC VAC I VAC II VBOR VKOR
	04	E01A E01B E05A E05B E05C E36A E36B
	05	F01A F01C F04Z F28A F59A F59B F59C F59D F59E F59F
	08	I08B I28A I28B I28C
	21B	X06A X06B X06C
38.84.10↔		BORP KORP MBOR MKOR VAC VAC I VAC II VBOR VKOR
	04	E01A E01B E05A E05B E05C E36A E36B
	05	F01A F01C F04Z F28A F59A F59B F59C F59D F59E F59F
	06	G02A G02B G12A G16A G16B G18A G33Z G38A G38B G38C
	07	H33Z
	08	I08B I28A I28B I28C
	10	K09A K09B
	11	L33Z
	21B	X06A X06B X07A X07B
38.84.20↔		BORP KORP MBOR MKOR VAC VAC I VAC II VBOR VKOR
	04	E01A E01B E05A E05B E05C E36A E36B
	05	F01A F01C F04Z F28A F59A F59B F59C F59D F59E F59F
	06	G02A G02B G12A G16A G16B G18A G33Z G38A G38B G38C
	07	H33Z
	08	I08B I28A I28B I28C
	10	K09A K09B
	11	L33Z
	21B	X06A X06B X07A X07B
38.84.31↔		BORP MBOR VAC VBOR
	01	B17A B17B
	04	E02A E02B E02C E36A E36B
	05	F01A F01C F03B F03C F03D F04Z F28A F59A F59B F59C F59D F59E F59F
	06	G12A G16A G38A G38B
	08	I08B I28A I28B I28C
	10	K09A K09B
	21B	X04Z X05Z X06A

CHOP	MDC	DRG
		X06B X06C
38.85.00↔	01	B17A B17B
	05	F01A F01C F03B
		F03C F03D F04Z
		F28A F31A F31B
		F31C F31D F31E
		F59A F59B F59C
		F59D F59E F59F
	06	G02A G02B G16A
		G16B G18A G18B
		G19A G19B G38A
		G38B G38C
	07	H33Z
	08	I08B I28A I28B
		I28C
	11	L33Z
	21B	X06A X06B X07A
		X07B
38.85.11↔		BORP KORP MBOR
		MKOR VAC VAC I
		VAC II VBOR VKOR
	01	B17A B17B
	04	E01A E01B E05A
		E05B E05C E36A
		E36B
	05	F01A F01C F03B
		F03C F03D F04Z
		F28A F31A F31B
		F31C F31D F31E
		F59A F59B F59C
		F59D F59E F59F
	06	G02A G02B G12A
		G16A G16B G18A
		G18B G19A G19B
		G33Z G38A G38B
		G38C
	07	H33Z
	08	I08B I28A I28B
		I28C
	11	L33Z
	14	O02A O02B
	21B	X06A X06B X07A
		X07B
38.85.12↔		BORP KORP MBOR
		MKOR VAC VAC I
		VAC II VBOR VKOR
	01	B17A B17B
	04	E01A E01B E05A
		E05B E05C E36A
		E36B
	05	F01A F01C F03B
		F03C F03D F04Z
		F28A F31A F31B
		F31C F31D F31E
		F59A F59B F59C
		F59D F59E F59F
	06	G02A G02B G12A
		G16A G16B G18A
		G18B G19A G19B
		G33Z G38A G38B
		G38C
	07	H33Z
	08	I08B I28A I28B
		I28C
	11	L33Z
	14	O02A O02B
	21B	X06A X06B X07A
		X07B
38.85.13↔		BORP KORP MBOR
		MKOR VAC VAC I
		VAC II VBOR VKOR
	01	B17A B17B
	04	E01A E01B E05A
		E05B E05C E36A
		E36B
	05	F01A F01C F03B
		F03C F03D F04Z
		F28A F31A F31B
		F31C F31D F31E
		F59A F59B F59C
		F59D F59E F59F
	06	G02A G02B G12A
		G16A G16B G18A
		G18B G19A G19B
		G33Z G38A G38B
		G38C
	07	H33Z
	08	I08B I28A I28B
		I28C
	11	L33Z
	14	O02A O02B
	21B	X06A X06B X07A
		X07B
38.85.21↔		BORP KORP MBOR
		MKOR VAC VAC I
		VAC II VBOR VKOR
	01	B17A B17B
	04	E01A E01B E05A
		E05B E05C E36A
		E36B
	05	F01A F01C F03B
		F03C F03D F04Z
		F28A F31A F31B
		F31C F31D F31E
		F59A F59B F59C
		F59D F59E F59F
	06	G02A G02B G12A
		G16A G16B G18A
		G18B G19A G19B
		G33Z G38A G38B
		G38C
	07	H33Z
	08	I08B I28A I28B
		I28C
	11	L33Z
	14	O02A O02B
	21B	X06A X06B X07A
		X07B
38.85.22↔		BORP KORP MBOR
		MKOR VAC VAC I
		VAC II VBOR VKOR
	01	B17A B17B
	04	E01A E01B E05A
		E05B E05C E36A
		E36B
	05	F01A F01C F03B
		F03C F03D F04Z
		F28A F31A F31B
		F31C F31D F31E
		F59A F59B F59C
		F59D F59E F59F
	06	G02A G02B G12A
		G16A G16B G18A
		G18B G19A G19B
		G33Z G38A G38B
		G38C
	07	H33Z
	08	I08B I28A I28B
		I28C
	11	L33Z
	14	O02A O02B
	21B	X06A X06B X07A
		X07B
38.85.23↔		BORP KORP MBOR
		MKOR VAC VAC I
		VAC II VBOR VKOR
	01	B17A B17B
	04	E01A E01B E05A
		E05B E05C E36A
		E36B
	05	F01A F01C F03B
		F03C F03D F04Z
		F28A F31A F31B
		F31C F31D F31E
		F59A F59B F59C
		F59D F59E F59F
	06	G02A G02B G12A
		G16A G16B G18A
		G18B G19A G19B
		G33Z G38A G38B
		G38C
	07	H33Z
	08	I08B I28A I28B
		I28C
	11	L33Z
	14	O02A O02B
	21B	X06A X06B X07A
		X07B
38.85.99↔	01	B17A B17B
	05	F01A F01C F03B
		F03C F03D F04Z
		F28A F31A F31B
		F31C F31D F31E
		F59A F59B F59C
		F59D F59E F59F
	06	G16A G16B G18A
		G18B G19A G19B
		G38A G38B G38C
	07	H33Z
	08	I08B I28A I28B
		I28C
	11	L33Z
	14	O02A O02B
	21B	X06A X06B X07A
		X07B
38.86.00↔		BORP MBOR VAC
		VAC I VAC II VBOR
	01	B17A B17B
	04	E36A E36B
	05	F01A F01C F04Z
		F28A F59A F59B
		F59C F59D F59E
		F59F
	06	G12A G12B G16A
		G38A G38B
	07	H06Z
	08	I08B I28A I28B
		I28C
	10	K09A K09B
	11	L09A L09B
	21B	X06A X06B
38.86.10↔		BORP MBOR VAC
		VAC I VAC II VBOR
	01	B17A B17B
	04	E36A E36B
	05	F01A F01C F04Z
		F28A F59A F59B
		F59C F59D F59E
		F59F
	06	G12A G12B G16A

PROC

PROC

CHOP	MDC	DRG
		G38A G38B
	07	H06Z
	08	I08B I28A I28B
		I28C
	10	K09A K09B
	11	L09A L09B
	21B	X06A X06B
38.86.11↔		BORP MBOR VAC
		VAC I VAC II VBOR
	01	B17A B17B
	04	E36A E36B
	05	F01A F01C F04Z
		F28A F59A F59B
		F59C F59D F59E
		F59F
	06	G12A G12B G16A
		G38A G38B
	07	H06Z
	08	I08B I28A I28B
		I28C
	10	K09A K09B
	11	L09A L09B
	21B	X06A X06B
38.86.12↔		BORP MBOR VAC
		VAC I VAC II VBOR
	01	B17A B17B
	04	E36A E36B
	05	F01A F01C F04Z
		F28A F59A F59B
		F59C F59D F59E
		F59F
	06	G12A G12B G16A
		G38A G38B
	07	H06Z
	08	I08B I28A I28B
		I28C
	10	K09A K09B
	11	L09A L09B
	21B	X06A X06B
38.86.13↔		BORP MBOR VAC
		VAC I VAC II VBOR
	01	B17A B17B
	04	E36A E36B
	05	F01A F01C F04Z
		F28A F59A F59B
		F59C F59D F59E
		F59F
	06	G12A G12B G16A
		G38A G38B
	07	H06Z
	08	I08B I28A I28B
		I28C
	10	K09A K09B
	11	L09A L09B
	21B	X06A X06B
38.86.14↔		BORP MBOR VAC
		VAC I VAC II VBOR
	01	B17A B17B
	04	E36A E36B
	05	F01A F01C F04Z
		F28A F59A F59B
		F59C F59D F59E
		F59F
	06	G12A G12B G16A
		G38A G38B
	07	H06Z
	08	I08B I28A I28B
		I28C
	10	K09A K09B
	11	L09A L09B
	21B	X06A X06B
38.86.15↔		BORP MBOR VAC
		VAC I VAC II VBOR
	01	B17A B17B
	04	E36A E36B
	05	F01A F01C F04Z
		F28A F59A F59B
		F59C F59D F59E
		F59F
	06	G12A G12B G16A
		G38A G38B
	07	H06Z
	08	I08B I28A I28B
		I28C
	10	K09A K09B
	11	L09A L09B
	21B	X06A X06B
38.86.16↔		BORP MBOR VAC
		VAC I VAC II VBOR
	01	B17A B17B
	04	E36A E36B
	05	F01A F01C F04Z
		F28A F59A F59B
		F59C F59D F59E
		F59F
	06	G12A G12B G16A
		G38A G38B
	07	H06Z
	08	I08B I28A I28B
		I28C
	10	K09A K09B
	11	L09A L09B
	21B	X06A X06B
38.86.17↔		BORP MBOR VAC
		VAC I VAC II VBOR
	01	B17A B17B
	04	E36A E36B
	05	F01A F01C F04Z
		F28A F59A F59B
		F59C F59D F59E
		F59F
	06	G12A G12B G16A
		G38A G38B
	07	H06Z
	08	I08B I28A I28B
		I28C
	10	K09A K09B
	11	L09A L09B
	21B	X06A X06B
38.86.19↔		BORP MBOR VAC
		VAC I VAC II VBOR
	01	B17A B17B
	04	E36A E36B
	05	F01A F01C F04Z
		F28A F59A F59B
		F59C F59D F59E
		F59F
	06	G12A G12B G16A
		G38A G38B
	07	H06Z
	08	I08B I28A I28B
		I28C
	10	K09A K09B
	11	L09A L09B
	21B	X06A X06B
38.86.99↔		BORP MBOR VAC
		VAC I VAC II VBOR
	01	B17A B17B
	04	E36A E36B
	05	F01A F01C F04Z
		F28A F59A F59B
		F59C F59D F59E
		F59F
	06	G12A G12B G16A
		G38A G38B
	07	H06Z
	08	I08B I28A I28B
		I28C
	10	K09A K09B
	11	L09A L09B
	21B	X06A X06B
38.87.00↔		BORP MBOR VAC
		VAC I VAC II VBOR
	01	B17A B17B
	04	E02A E02B E02C
		E36A E36B
	05	F01A F01C F04Z
		F28A F59A F59B
		F59C F59D F59E
		F59F
	06	G12A G12B G16A
		G38A G38B
	08	I08B I28A I28B
		I28C
	11	L09A L09B
	13	N25A N25B
	21B	X04Z X06A X06B
38.87.10↔		BORP MBOR VAC
		VAC I VAC II VBOR
	01	B17A B17B
	04	E02A E02B E02C
		E36A E36B
	05	F01A F01C F04Z
		F28A F59A F59B
		F59C F59D F59E
		F59F
	06	G12A G12B G16A
		G38A G38B
	08	I08B I28A I28B
		I28C
	11	L09A L09B
	13	N25A N25B
	21B	X04Z X06A X06B
38.87.11↔		BORP MBOR VAC
		VAC I VAC II VBOR
	01	B17A B17B
	04	E02A E02B E02C
		E36A E36B
	05	F01A F01C F04Z
		F28A F59A F59B
		F59C F59D F59E
		F59F
	06	G12A G12B G16A
		G38A G38B
	07	H06Z
	08	I08B I28A I28B
		I28C
	11	L09A L09B
	13	N25A N25B
	14	O02A O02B
	21B	X04Z X06A X06B
38.87.12↔		BORP MBOR VAC
		VAC I VAC II VBOR
	01	B17A B17B
	04	E02A E02B E02C
		E36A E36B
	05	F01A F01C F04Z
		F28A F59A F59B
		F59C F59D F59E
		F59F

CHOP	MDC	DRG
	06	G12A G12B G16A G38A G38B
	07	H06Z
	08	I08B I28A I28B I28C
	11	L09A L09B
	13	N25A N25B
	14	O02A O02B
	21B	X04Z X06A X06B
38.87.19↔		BORP MBOR VAC VAC I VAC II VBOR
	01	B17A B17B
	04	E02A E02B E02C E36A E36B
	05	F01A F01C F04Z F28A F59A F59B F59C F59D F59E F59F
	06	G12A G12B G16A G38A G38B
	07	H06Z
	08	I08B I28A I28B I28C
	11	L09A L09B
	13	N25A N25B
	14	O02A O02B
	21B	X04Z X06A X06B
38.87.99↔		BORP MBOR VAC VAC I VAC II VBOR
	01	B17A B17B
	04	E02A E02B E02C E36A E36B
	05	F01A F01C F04Z F28A F59A F59B F59C F59D F59E F59F
	06	G12A G12B G16A G38A G38B
	07	H06Z
	08	I08B I28A I28B I28C
	11	L09A L09B
	13	N25A N25B
	14	O02A O02B
	21B	X04Z X06A X06B
38.93.11‡↔		KP
	01	B60A
	09	J11A J11B
	17	R62A R65A R65B
39.0X.00↔		BORP KORP MBOR MKOR VAC VAC I VAC II VBOR VKOR
	04	E02A E02B E02C E36A E36B
	05	F01A F01C F04Z F28A F30Z F31A F31B F31C F31D F31E F59A F59B F59C F59D F59E F59F
	06	G12A G16A G33Z G38A G38B G38C
	07	H33Z
	08	I08B I28A I28B I28C
	10	K09A K09B
	11	L33Z
	15	P02A P02B P02C
	21B	X07A X07B
39.0X.10↔		BORP KORP MBOR MKOR VAC VAC I VAC II VBOR VKOR
	04	E02A E02B E02C E36A E36B
	05	F01A F01C F04Z F28A F30Z F31A F31B F31C F31D F31E F59A F59B F59C F59D F59E F59F
	06	G12A G16A G33Z G38A G38B G38C
	07	H33Z
	08	I08B I28A I28B I28C
	10	K09A K09B
	11	L33Z
	15	P02A P02B P02C
	21B	X07A X07B
39.0X.11↔		BORP KORP MBOR MKOR VAC VAC I VAC II VBOR VKOR
	04	E02A E02B E02C E36A E36B
	05	F01A F01C F04Z F28A F30Z F31A F31B F31C F31D F31E F59A F59B F59C F59D F59E F59F
	06	G12A G16A G33Z G38A G38B G38C
	07	H33Z
	08	I08B I28A I28B I28C
	10	K09A K09B
	11	L33Z
	15	P02A P02B P02C
	21B	X07A X07B
39.0X.12↔		BORP KORP MBOR MKOR VAC VAC I VAC II VBOR VKOR
	04	E02A E02B E02C E36A E36B
	05	F01A F01C F04Z F28A F30Z F31A F31B F31C F31D F31E F59A F59B F59C F59D F59E F59F
	06	G12A G16A G33Z G38A G38B G38C
	07	H33Z
	08	I08B I28A I28B I28C
	10	K09A K09B
	11	L33Z
	15	P02A P02B P02C
	21B	X07A X07B
39.0X.13↔		BORP KORP MBOR MKOR VAC VAC I VAC II VBOR VKOR
	04	E02A E02B E02C E36A E36B
	05	F01A F01C F04Z F28A F30Z F31A F31B F31C F31D F31E F59A F59B F59C F59D F59E F59F
	06	G12A G16A G33Z G38A G38B G38C
	07	H33Z
	08	I08B I28A I28B I28C
	10	K09A K09B
	11	L33Z
	15	P02A P02B P02C
	21B	X07A X07B
39.0X.20↔		BORP KORP MBOR MKOR VAC VAC I VAC II VBOR VKOR
	04	E02A E02B E02C E36A E36B
	05	F01A F01C F04Z F28A F30Z F31A F31B F31C F31D F31E F59A F59B F59C F59D F59E F59F
	06	G12A G16A G33Z G38A G38B G38C
	07	H33Z
	08	I08B I28A I28B I28C
	10	K09A K09B
	11	L33Z
	15	P02A P02B P02C
	21B	X07A X07B
39.0X.21↔		BORP KORP MBOR MKOR VAC VAC I VAC II VBOR VKOR
	04	E02A E02B E02C E36A E36B
	05	F01A F01C F04Z F28A F30Z F31A F31B F31C F31D F31E F59A F59B F59C F59D F59E F59F
	06	G12A G16A G33Z G38A G38B G38C
	07	H33Z
	08	I08B I28A I28B I28C
	10	K09A K09B
	11	L33Z
	15	P02A P02B P02C
	21B	X07A X07B
39.0X.23↔		BORP KORP MBOR MKOR VAC VAC I VAC II VBOR VKOR
	04	E02A E02B E02C E36A E36B
	05	F01A F01C F04Z F28A F30Z F31A F31B F31C F31D F31E F59A F59B F59C F59D F59E F59F
	06	G12A G16A G33Z G38A G38B G38C
	07	H33Z
	08	I08B I28A I28B I28C
	10	K09A K09B
	11	L33Z
	15	P02A P02B P02C
	21B	X07A X07B
39.0X.24↔		BORP KORP MBOR

PROC

PROC

CHOP	MDC	DRG
		MKOR VAC VAC I VAC II VBOR VKOR
	04	E02A E02B E02C E36A E36B
	05	F01A F01C F04Z F28A F30Z F31A F31B F31C F31D F31E F59A F59B F59C F59D F59E F59F
	06	G12A G16A G33Z G38A G38B G38C
	07	H33Z
	08	I08B I28A I28B I28C
	10	K09A K09B
	11	L33Z
	15	P02A P02B P02C
	21B	X07A X07B
39.0X.99↔		BORP KORP MBOR MKOR VAC VAC I VAC II VBOR VKOR
	04	E02A E02B E02C E36A E36B
	05	F01A F01C F04Z F28A F30Z F31A F31B F31C F31D F31E F59A F59B F59C F59D F59E F59F
	06	G12A G16A G33Z G38A G38B G38C
	07	H33Z
	08	I08B I28A I28B I28C
	10	K09A K09B
	11	L33Z
	15	P02A P02B P02C
	21B	X07A X07B
39.10↔		BORP KORP MBOR MKOR VAC VAC I VAC II VBOR VKOR
	04	E36A E36B
	05	F01A F01C F04Z F28A F59A F59B F59C F59D F59E F59F
	06	G12A G16A G16B G18A G18B G19A G19B G33Z G38A G38B G38C
	07	H01A H01B H01C H09A H09B H09C H33Z
	08	I08B I28A I28B I28C
	11	L33Z
	21B	X07A X07B
39.11.00↔		BORP KORP MBOR MKOR VAC VAC I VAC II VBOR VKOR
	04	E36A E36B
	05	F01A F01C F04Z F28A F59A F59B F59C F59D F59E F59F
	06	G12A G16A G16B G18A G18B G19A G19B G33Z G38A G38B G38C
	07	H01A H01B H01C H09A H09B H09C H33Z
	08	I08B I28A I28B I28C
	11	L33Z
	21B	X07A X07B
39.11.11↔		BORP KORP MBOR MKOR VAC VAC I VAC II VBOR VKOR
	04	E36A E36B
	05	F01A F01C F04Z F28A F59A F59B F59C F59D F59E F59F
	06	G12A G16A G16B G18A G18B G19A G19B G33Z G38A G38B G38C
	07	H01A H01B H01C H09A H09B H09C H33Z
	08	I08B I28A I28B I28C
	11	L33Z
	21B	X07A X07B
39.11.12↔		BORP KORP MBOR MKOR VAC VAC I VAC II VBOR VKOR
	04	E36A E36B
	05	F01A F01C F04Z F28A F59A F59B F59C F59D F59E F59F
	06	G12A G16A G16B G18A G18B G19A G19B G33Z G38A G38B G38C
	07	H01A H01B H01C H09A H09B H09C H33Z
	08	I08B I28A I28B I28C
	11	L33Z
	21B	X07A X07B
39.11.13↔		BORP KORP MBOR MKOR VAC VAC I VAC II VBOR VKOR
	04	E36A E36B
	05	F01A F01C F04Z F28A F59A F59B F59C F59D F59E F59F
	06	G12A G16A G16B G18A G18B G19A G19B G33Z G38A G38B G38C
	07	H01A H01B H01C H09A H09B H09C H33Z
	08	I08B I28A I28B I28C
	11	L33Z
	21B	X07A X07B
39.11.21↔		BORP KORP MBOR MKOR VAC VAC I VAC II VBOR VKOR
	04	E36A E36B
	05	F01A F01C F04Z F28A F59A F59B F59C F59D F59E F59F
	06	G12A G16A G16B G18A G18B G19A G19B G33Z G38A G38B G38C
	07	H01A H01B H01C H09A H09B H09C H33Z
	08	I08B I28A I28B I28C
	11	L33Z
	21B	X07A X07B
39.11.22↔		BORP KORP MBOR MKOR VAC VAC I VAC II VBOR VKOR
	04	E36A E36B
	05	F01A F01C F04Z F28A F59A F59B F59C F59D F59E F59F
	06	G12A G16A G16B G18A G18B G19A G19B G33Z G38A G38B G38C
	07	H01A H01B H01C H09A H09B H09C H33Z
	08	I08B I28A I28B I28C
	11	L33Z
	21B	X07A X07B
39.11.23↔		BORP KORP MBOR MKOR VAC VAC I VAC II VBOR VKOR
	04	E36A E36B
	05	F01A F01C F04Z F28A F59A F59B F59C F59D F59E F59F
	06	G12A G16A G16B G18A G18B G19A G19B G33Z G38A G38B G38C
	07	H01A H01B H01C H09A H09B H09C H33Z
	08	I08B I28A I28B I28C
	11	L33Z
	21B	X07A X07B
39.11.24↔		BORP KORP MBOR MKOR VAC VAC I VAC II VBOR VKOR
	04	E36A E36B
	05	F01A F01C F04Z F28A F59A F59B F59C F59D F59E F59F
	06	G12A G16A G16B G18A G18B G19A G19B G33Z G38A G38B G38C
	07	H01A H01B H01C H09A H09B H09C H33Z
	08	I08B I28A I28B I28C
	11	L33Z
	21B	X07A X07B

CHOP	MDC	DRG
39.11.99↔		BORP KORP MBOR MKOR VAC VAC I VAC II VBOR VKOR
	04	E36A E36B
	05	F01A F01C F04Z F28A F59A F59B F59C F59D F59E F59F
	06	G12A G16A G16B G18A G18B G19A G19B G33Z G38A G38B G38C
	07	H01A H01B H01C H09A H09B H09C H33Z
	08	I08B I28A I28B I28C
	11	L33Z
	21B	X07A X07B
39.19↔		BORP KORP MBOR MKOR VAC VAC I VAC II VBOR VKOR
	04	E36A E36B
	05	F01A F01C F04Z F28A F59A F59B F59C F59D F59E F59F
	06	G12A G16A G16B G18A G18B G19A G19B G33Z G38A G38B G38C
	07	H01A H01B H01C H09A H09B H09C H33Z
	08	I08B I28A I28B I28C
	11	L33Z
	21B	X07A X07B
39.21.00↔		BORP KORP MBOR MKOR VAC VAC I VAC II VBOR VKOR
	04	E01A E01B E05A E05B E05C E36A E36B
	05	F01A F01C F30Z
	06	G12A G16A G33Z G38A G38B G38C
	07	H33Z
	11	L33Z
	15	P02A P02B P02C
	21B	X07A X07B
	Prä	A06A A06B A06C A07A
39.21.10↔		BORP KORP MBOR MKOR VAC VAC I VAC II VBOR VKOR
	04	E01A E01B E05A E05B E05C E36A E36B
	05	F01A F01C F30Z
	06	G12A G16A G33Z G38A G38B G38C
	07	H33Z
	11	L33Z
	15	P02A P02B P02C
	21B	X07A X07B
	Prä	A06A A06B A06C A07A
39.21.99↔		BORP KORP MBOR MKOR VAC VAC I VAC II VBOR VKOR
	04	E01A E01B E05A E05B E05C E36A E36B
	05	F01A F01C F30Z
	06	G12A G16A G33Z G38A G38B G38C
	07	H33Z
	11	L33Z
	15	P02A P02B P02C
	21B	X07A X07B
	Prä	A06A A06B A06C A07A
39.22.11↔		BORP KORP MBOR MKOR VAC VAC I VAC II VBOR VKOR
	01	B01A B01B B04A B04B B04C
	04	E36A E36B
	05	F01A F01C F04Z F06A F06B F13A F28A F31A F31B F31C F31D F31E
	06	G12A G16A G38A G38B
	08	I08B I28A I28B I28C
	10	K09A K09B
	21B	X06A X06B X06C X07A X07B
39.22.12↔		BORP KORP MBOR MKOR VAC VAC I VAC II VBOR VKOR
	01	B01A B01B B04A B04B B04C
	04	E36A E36B
	05	F01A F01C F04Z F06A F06B F13A F28A F31A F31B F31C F31D F31E
	06	G12A G16A G38A G38B
	08	I08B I28A I28B I28C
	10	K09A K09B
	21B	X06A X06B X06C X07A X07B
39.22.13↔		BORP KORP MBOR MKOR VAC VAC I VAC II VBOR VKOR
	01	B01A B01B B04A B04B B04C
	04	E36A E36B
	05	F01A F01C F04Z F06A F06B F13A F28A F31A F31B F31C F31D F31E
	06	G12A G16A G38A G38B
	08	I08B I28A I28B I28C
	10	K09A K09B
	21B	X06A X06B X06C X07A X07B
39.22.14↔		BORP KORP MBOR MKOR VAC VAC I VAC II VBOR VKOR
	01	B01A B01B B04A B04B B04C
	04	E36A E36B
	05	F01A F01C F04Z F06A F06B F13A F28A F31A F31B F31C F31D F31E
	06	G12A G16A G38A G38B
	08	I08B I28A I28B I28C
	10	K09A K09B
	21B	X06A X06B X06C X07A X07B
39.22.19↔		BORP KORP MBOR MKOR VAC VAC I VAC II VBOR VKOR
	01	B01A B01B B04A B04B B04C
	04	E36A E36B
	05	F01A F01C F04Z F06A F06B F13A F28A F31A F31B F31C F31D F31E
	06	G12A G16A G38A G38B
	08	I08B I28A I28B I28C
	10	K09A K09B
	21B	X06A X06B X06C X07A X07B
39.22.21↔		BORP KORP MBOR MKOR VAC VAC I VAC II VBOR VKOR
	01	B01A B01B B04A B04B B04C
	04	E36A E36B
	05	F01A F01C F04Z F06A F06B F13A F28A F31A F31B F31C F31D F31E
	06	G12A G16A G38A G38B
	08	I08B I28A I28B I28C
	10	K09A K09B
	21B	X06A X06B X06C X07A X07B
39.22.29↔		BORP KORP MBOR MKOR VAC VAC I VAC II VBOR VKOR
	01	B01A B01B B04A B04B B04C
	04	E36A E36B
	05	F01A F01C F04Z F06A F06B F13A F28A F31A F31B F31C F31D F31E
	06	G12A G16A G38A G38B
	08	I08B I28A I28B I28C
	10	K09A K09B
	21B	X06A X06B X06C X07A X07B
39.22.99↔		BORP KORP MBOR MKOR VAC VAC I VAC II VBOR VKOR
	01	B01A B01B B04A B04B B04C
	04	E36A E36B
	05	F01A F01C F04Z F06A F06B F13A

PROC

PROC

CHOP	MDC	DRG
		F28A F31A F31B F31C F31D F31E
	06	G12A G16A G38A G38B
	08	I08B I28A I28B I28C
	10	K09A K09B
	21B	X06A X06B X06C X07A X07B
39.23↔		BORP KORP MBOR MKOR VAC VAC I VAC II VBOR VKOR
	04	E36A E36B
	05	F01A F01C F04Z F13A F28A F31A F31B F31C F31D F31E
	06	G12A G16A G38A G38B
	08	I08B I28A I28B I28C
	21B	X06A X06B X06C X07A X07B
39.24↔		BORP KORP MBOR MKOR VAC VAC I VAC II VBOR VKOR
	04	E36A E36B
	05	F01A F01C F04Z F13A F28A F31A F31B F31C F31D F31E
	06	G12A G16A G38A G38B
	08	I08B I28A I28B I28C
	21B	X06A X06B X06C X07A X07B
39.25.09↔		BORP KORP MBOR MKOR VAC VAC I VAC II VBOR VKOR
	04	E36A E36B
	05	F01A F01C F04Z F13A F13B F13C F28A F31A F31B F31C F31D F31E
	06	G12A G16A G38A G38B
	08	I08B I28A I28B I28C
	09	J02A J02B J03A J03B J04Z J11A J11B
	21B	X06A X06B X06C X07A X07B
39.25.11↔		BORP KORP MBOR MKOR VAC VAC I VAC II VBOR VKOR
	04	E36A E36B
	05	F01A F01C F04Z F13A F13B F13C F28A F31A F31B F31C F31D F31E
	06	G12A G16A G38A G38B
	08	I08B I28A I28B I28C
	09	J02A J02B J03A J03B J04Z J11A J11B
	21B	X06A X06B X06C X07A X07B
39.25.12↔		BORP KORP MBOR MKOR VAC VAC I VAC II VBOR VKOR
	04	E36A E36B
	05	F01A F01C F04Z F13A F13B F13C F28A F31A F31B F31C F31D F31E
	06	G12A G16A G38A G38B
	08	I08B I28A I28B I28C
	09	J02A J02B J03A J03B J04Z J11A J11B
	21B	X06A X06B X06C X07A X07B
39.25.13↔		BORP KORP MBOR MKOR VAC VAC I VAC II VBOR VKOR
	04	E36A E36B
	05	F01A F01C F04Z F13A F13B F13C F28A F31A F31B F31C F31D F31E
	06	G12A G16A G38A G38B
	08	I08B I28A I28B I28C
	09	J02A J02B J03A J03B J04Z J11A J11B
	21B	X06A X06B X06C X07A X07B
39.25.14↔		BORP KORP MBOR MKOR VAC VAC I VAC II VBOR VKOR
	04	E36A E36B
	05	F01A F01C F04Z F13A F13B F13C F28A F31A F31B F31C F31D F31E
	06	G12A G16A G38A G38B
	08	I08B I28A I28B I28C
	09	J02A J02B J03A J03B J04Z J11A J11B
	21B	X06A X06B X06C X07A X07B
39.25.15↔		BORP KORP MBOR MKOR VAC VAC I VAC II VBOR VKOR
	04	E36A E36B
	05	F01A F01C F04Z F13A F13B F13C F28A F31A F31B F31C F31D F31E
	06	G12A G16A G38A G38B
	08	I08B I28A I28B I28C
	09	J02A J02B J03A J03B J04Z J11A J11B
	21B	X06A X06B X06C X07A X07B
39.25.16↔		BORP KORP MBOR MKOR VAC VAC I VAC II VBOR VKOR
	04	E36A E36B
	05	F01A F01C F04Z F13A F13B F13C F28A F31A F31B F31C F31D F31E
	06	G12A G16A G38A G38B
	08	I08B I28A I28B I28C
	09	J02A J02B J03A J03B J04Z J11A J11B
	21B	X06A X06B X06C X07A X07B
39.25.21↔		BORP KORP MBOR MKOR VAC VAC I VAC II VBOR VKOR
	04	E36A E36B
	05	F01A F01C F04Z F13A F13B F13C F28A F31A F31B F31C F31D F31E
	06	G12A G16A G38A G38B
	08	I08B I28A I28B I28C
	09	J02A J02B J03A J03B J04Z J11A J11B
	21B	X06A X06B X06C X07A X07B
39.25.22↔		BORP KORP MBOR MKOR VAC VAC I VAC II VBOR VKOR
	04	E36A E36B
	05	F01A F01C F04Z F13A F13B F13C F28A F31A F31B F31C F31D F31E
	06	G12A G16A G38A G38B
	08	I08B I28A I28B I28C
	09	J02A J02B J03A J03B J04Z J11A J11B
	21B	X06A X06B X06C X07A X07B
39.25.23↔		BORP KORP MBOR MKOR VAC VAC I VAC II VBOR VKOR
	04	E36A E36B
	05	F01A F01C F04Z F13A F13B F13C F28A F31A F31B F31C F31D F31E
	06	G12A G16A G38A G38B
	08	I08B I28A I28B I28C
	09	J02A J02B J03A J03B J04Z J11A J11B
	21B	X06A X06B X06C X07A X07B
39.25.24↔		BORP KORP MBOR MKOR VAC VAC I VAC II VBOR VKOR

CHOP	MDC	DRG
	04	E36A E36B
	05	F01A F01C F04Z F13A F13B F13C F28A F31A F31B F31C F31D F31E
	06	G12A G16A G38A G38B
	08	I08B I28A I28B I28C
	09	J02A J02B J03A J03B J04Z J11A J11B
	21B	X06A X06B X06C X07A X07B
39.25.30↔		BORP KORP MBOR MKOR VAC VAC I VAC II VBOR VKOR
	04	E36A E36B
	05	F01A F01C F04Z F13A F13B F13C F28A F31A F31B F31C F31D F31E
	06	G12A G16A G38A G38B
	08	I08B I28A I28B I28C
	09	J02A J02B J03A J03B J04Z J11A J11B
	21B	X06A X06B X06C X07A X07B
39.26.10↔		BORP KORP MBOR MKOR VAC VAC I VAC II VBOR VKOR
	04	E36A E36B
	05	F01A F01C F04Z F13A F28A F31A F31B F31C F31D F31E
	06	G12A G12B G16A G38A G38B
	07	H06Z
	08	I08B I28A I28B I28C
	21B	X06A X06B X06C X07A X07B
39.26.11↔		BORP KORP MBOR MKOR VAC VAC I VAC II VBOR VKOR
	04	E36A E36B
	05	F01A F01C F04Z F13A F28A F31A F31B F31C F31D F31E
	06	G12A G12B G16A G38A G38B
	07	H06Z
	08	I08B I28A I28B I28C
	21B	X06A X06B X06C X07A X07B
39.26.12↔		BORP KORP MBOR MKOR VAC VAC I VAC II VBOR VKOR
	04	E36A E36B
	05	F01A F01C F04Z F13A F28A F31A F31B F31C F31D F31E
	06	G12A G12B G16A G38A G38B
	07	H06Z
	08	I08B I28A I28B I28C
	21B	X06A X06B X06C X07A X07B
39.26.19↔		BORP KORP MBOR MKOR VAC VAC I VAC II VBOR VKOR
	04	E36A E36B
	05	F01A F01C F04Z F13A F28A F31A F31B F31C F31D F31E
	06	G12A G12B G16A G38A G38B
	07	H06Z
	08	I08B I28A I28B I28C
	21B	X06A X06B X06C X07A X07B
39.26.99↔		BORP KORP MBOR MKOR VAC VAC I VAC II VBOR VKOR
	04	E36A E36B
	05	F01A F01C F04Z F13A F28A F31A F31B F31C F31D F31E
	06	G12A G12B G16A G38A G38B
	07	H06Z
	08	I08B I28A I28B I28C
	21B	X06A X06B X06C X07A X07B
39.27.00↔	01	B04A B04B B04C
	05	F21A F21B F21C
	06	G12A G12B
	07	H06Z
	08	I28A I28B I28C
	09	J11A
	10	K09A K09B
	11	L09A L09B
	21B	X06A X06B X06C
	22	Y02A Y02B Y02C
39.27.09↔	01	B04A B04B B04C
	05	F21A F21B F21C
	06	G12A G12B
	07	H06Z
	08	I28A I28B I28C
	09	J11A
	10	K09A K09B
	11	L09A L09B
	21B	X06A X06B X06C
	22	Y02A Y02B Y02C
39.27.11↔	01	B04A B04B B04C
	05	F21A F21B F21C
	06	G12A G12B
	07	H06Z
	08	I28A I28B I28C
	09	J11A
	10	K09A K09B
	11	L09A L09B
	21B	X06A X06B X06C
	22	Y02A Y02B Y02C
39.27.12↔	01	B04A B04B B04C
	05	F21A F21B F21C
	06	G12A G12B
	07	H06Z
	08	I28A I28B I28C
	09	J11A
	10	K09A K09B
	11	L09A L09B
	21B	X06A X06B X06C
	22	Y02A Y02B Y02C
39.27.14↔	01	B04A B04B B04C
	05	F21A F21B F21C
	06	G12A G12B
	07	H06Z
	08	I28A I28B I28C
	09	J11A
	10	K09A K09B
	11	L09A L09B
	21B	X06A X06B X06C
	22	Y02A Y02B Y02C
39.27.15↔	01	B04A B04B B04C
	05	F21A F21B F21C
	06	G12A G12B
	07	H06Z
	08	I28A I28B I28C
	09	J11A
	10	K09A K09B
	11	L09A L09B
	21B	X06A X06B X06C
	22	Y02A Y02B Y02C
39.28↔		BORP KORP MBOR MKOR VAC VAC I VAC II VBOR VKOR
	01	B01A B02A B02B B20A B20B B20C B20D
	04	E36A E36B
	05	F04Z F06A F06B
	06	G12A G16A G33Z G38A G38B G38C
	07	H33Z
	08	I08B I28A I28B I28C
	11	L33Z
	21A	W01A W01B W01C
	21B	X06A X06B X06C X07A X07B
39.29.10↔		BORP KORP MBOR MKOR VAC VAC I VAC II VBOR VKOR
	04	E36A E36B
	05	F01A F01C F04Z F13A F21A F21B F21C F28A
	06	G12A G16A G38A G38B
	07	H06Z
	08	I08B I28A I28B I28C
	09	J02A J02B J03A J03B J04Z J11A J11B
	10	K09A K09B
	21B	X04Z X06A X06B X06C X07A X07B
39.29.11↔		BORP KORP MBOR MKOR VAC VAC I VAC II VBOR VKOR
	04	E36A E36B
	05	F01A F01C F04Z F13A F21A F21B F21C F28A F31A F31B F31C F31D F31E

PROC

PROC

CHOP	MDC	DRG
	06	G12A G16A G38A G38B
	07	H06Z
	08	I08B I28A I28B I28C
	09	J02A J02B J03A J03B J04Z J11A J11B
	10	K09A K09B
	21B	X04Z X06A X06B X06C X07A X07B
39.29.12↔		BORP KORP MBOR MKOR VAC VAC I VAC II VBOR VKOR
	04	E36A E36B
	05	F01A F01C F04Z F13A F21A F21B F21C F28A F31A F31B F31C F31D F31E
	06	G12A G16A G38A G38B
	07	H06Z
	08	I08B I28A I28B I28C
	09	J02A J02B J03A J03B J04Z J11A J11B
	10	K09A K09B
	21B	X04Z X06A X06B X06C X07A X07B
39.29.13↔		BORP KORP MBOR MKOR VAC VAC I VAC II VBOR VKOR
	04	E36A E36B
	05	F01A F01C F04Z F13A F21A F21B F21C F28A F31A F31B F31C F31D F31E
	06	G12A G16A G38A G38B
	07	H06Z
	08	I08B I28A I28B I28C
	09	J02A J02B J03A J03B J04Z J11A J11B
	10	K09A K09B
	21B	X04Z X06A X06B X06C X07A X07B
39.29.14↔		BORP KORP MBOR MKOR VAC VAC I VAC II VBOR VKOR
	04	E36A E36B
	05	F01A F01C F04Z F13A F21A F21B F21C F28A F31A F31B F31C F31D F31E
	06	G12A G16A G38A G38B
	07	H06Z
	08	I08B I28A I28B I28C
	09	J02A J02B J03A J03B J04Z J11A J11B
	10	K09A K09B
	21B	X04Z X06A X06B X06C X07A X07B
39.29.15↔		BORP KORP MBOR MKOR VAC VAC I VAC II VBOR VKOR
	04	E36A E36B
	05	F01A F01C F04Z F13A F21A F21B F21C F28A F31A F31B F31C F31D F31E
	06	G12A G16A G38A G38B
	07	H06Z
	08	I08B I28A I28B I28C
	09	J02A J02B J03A J03B J04Z J11A J11B
	10	K09A K09B
	21B	X04Z X06A X06B X06C X07A X07B
39.29.16↔		BORP KORP MBOR MKOR VAC VAC I VAC II VBOR VKOR
	04	E36A E36B
	05	F01A F01C F04Z F13A F21A F21B F21C F28A F31A F31B F31C F31D F31E
	06	G12A G16A G38A G38B
	07	H06Z
	08	I08B I28A I28B I28C
	09	J02A J02B J03A J03B J04Z J11A J11B
	10	K09A K09B
	21B	X04Z X06A X06B X06C X07A X07B
39.29.19↔		BORP KORP MBOR MKOR VAC VAC I VAC II VBOR VKOR
	04	E36A E36B
	05	F01A F01C F04Z F13A F21A F21B F21C F28A F31A F31B F31C F31D F31E
	06	G12A G16A G38A G38B
	07	H06Z
	08	I08B I28A I28B I28C
	09	J02A J02B J03A J03B J04Z J11A J11B
	10	K09A K09B
	21B	X04Z X06A X06B X06C X07A X07B
39.29.20↔		BORP KORP MBOR MKOR VAC VAC I VAC II VBOR VKOR
	04	E36A E36B
	05	F01A F01C F04Z F13A F21A F21B F21C F28A F59A F59B F59C F59D F59E F59F F59G
	06	G12A G16A G38A G38B
	07	H06Z
	08	I08B I28A I28B I28C
	09	J02A J02B J03A J03B J04Z J11A J11B
	10	K09A K09B
	21B	X04Z X06A X06B X06C X07A X07B
39.29.30↔		BORP KORP MBOR MKOR VAC VAC I VAC II VBOR VKOR
	04	E36A E36B
	05	F01A F01C F04Z F13A F21A F21B F21C F28A
	06	G12A G16A G38A G38B
	07	H06Z
	08	I08B I28A I28B I28C
	09	J02A J02B J03A J03B J04Z J11A J11B
	10	K09A K09B
	21B	X04Z X06A X06B X06C X07A X07B
39.29.31↔		BORP KORP MBOR MKOR VAC VAC I VAC II VBOR VKOR
	04	E36A E36B
	05	F01A F01C F04Z F13A F21A F21B F21C F28A F31A F31B F31C F31D F31E
	06	G12A G16A G38A G38B
	07	H06Z
	08	I08B I28A I28B I28C
	09	J02A J02B J03A J03B J04Z J11A J11B
	10	K09A K09B
	21B	X04Z X06A X06B X06C X07A X07B
39.29.32↔		BORP KORP MBOR MKOR VAC VAC I VAC II VBOR VKOR
	04	E36A E36B
	05	F01A F01C F04Z F13A F21A F21B F21C F28A F31A F31B F31C F31D F31E
	06	G12A G16A G38A G38B
	07	H06Z
	08	I08B I28A I28B I28C
	09	J02A J02B J03A J03B J04Z J11A J11B
	10	K09A K09B
	21B	X04Z X06A X06B X06C X07A X07B
39.29.33↔		BORP KORP MBOR

CHOP	MDC	DRG
		MKOR VAC VAC I VAC II VBOR VKOR
	04	E36A E36B
	05	F01A F01C F04Z F13A F21A F21B F21C F28A F31A F31B F31C F31D F31E
	06	G12A G16A G38A G38B
	07	H06Z
	08	I08B I28A I28B I28C
	09	J02A J02B J03A J03B J04Z J11A J11B
	10	K09A K09B
	21B	X04Z X06A X06B X06C X07A X07B
39.29.39↔		BORP MBOR VAC VAC I VAC II VBOR
	04	E36A E36B
	05	F01A F01C F04Z F13A F21A F21B F21C F28A F31A F31B F31C F31D F31E
	06	G12A G16A G38A G38B
	07	H06Z
	08	I08B I28A I28B I28C
	09	J02A J02B J03A J03B J04Z J11A J11B
	10	K09A K09B
	21B	X04Z X06A X06B X06C X07A X07B
39.29.40↔		BORP MBOR VAC VAC I VAC II VBOR
	04	E36A E36B
	05	F01A F01C F04Z F13A F21A F21B F21C F28A F31A F31B F31C F31D F31E
	06	G12A G16A G38A G38B
	07	H06Z
	08	I08B I28A I28B I28C
	09	J02A J02B J03A J03B J04Z J11A J11B
	10	K09A K09B
	21B	X04Z X06A X06B X06C X07A X07B
39.29.81↔		BORP MBOR VAC VAC I VAC II VBOR
	04	E36A E36B
	05	F01A F01C F04Z F13A F21A F21B F21C F28A F31A F31B F31C F31D F31E
	06	G12A G16A G38A G38B
	07	H06Z
	08	I08B I28A I28B I28C
	09	J02A J02B J03A J03B J04Z J11A J11B
	10	K09A K09B
	21B	X04Z X06A X06B X06C X07A X07B
39.29.82↔		BORP MBOR VAC VAC I VAC II VBOR
	04	E36A E36B
	05	F01A F01C F04Z F13A F21A F21B F21C F28A F31A F31B F31C F31D F31E
	06	G12A G16A G38A G38B
	07	H06Z
	08	I08B I28A I28B I28C
	09	J02A J02B J03A J03B J04Z J11A J11B
	10	K09A K09B
	21B	X04Z X06A X06B X06C X07A X07B
39.29.89↔		BORP MBOR VAC VAC I VAC II VBOR
	04	E36A E36B
	05	F01A F01C F04Z F13A F21A F21B F21C F28A F31A F31B F31C F31D F31E
	06	G12A G16A G38A G38B
	07	H06Z
	08	I08B I28A I28B I28C
	09	J02A J02B J03A J03B J04Z J11A J11B
	10	K09A K09B
	21B	X04Z X06A X06B X06C X07A X07B
39.29.99↔		BORP MBOR VAC VAC I VAC II VBOR
	04	E36A E36B
	05	F01A F01C F04Z F13A F21A F21B F21C F28A F31A F31B F31C F31D F31E
	06	G12A G16A G38A G38B
	07	H06Z
	08	I08B I28A I28B I28C
	09	J02A J02B J03A J03B J04Z J11A J11B
	10	K09A K09B
	21B	X04Z X06A X06B X06C X07A X07B
39.2A↔		BORP KORP MBOR MKOR VAC VAC I VAC II VBOR VKOR
	01	B01A B02A B02B B20A B20B B20C
	04	E36A E36B
	05	F04Z F06A F06B
	06	G12A G16A G33Z G38A G38B G38C
	07	H33Z
	08	I08B I28A I28B I28C
	11	L33Z
	21A	W01A W01B W01C
	21B	X06A X06B X06C X07A X07B
39.31.10↔		BORP MBOR VAC VBOR
	04	E36A E36B
	05	F01A F01C F04Z F28A F59A F59B F59C F59D F59E F59F F59G
	06	G12A G12B G16A G38A G38B
	07	H33Z
	08	I08B I28A I28B I28C I32C
	10	K09A K09B
	11	L09A L09B L33Z
	21B	X05Z X06A X06B X06C X07A X07B
39.31.11↔		BORP MBOR VAC VBOR
	04	E36A E36B
	05	F01A F01C F04Z F28A F59A F59B F59C F59D F59E F59F F59G
	06	G12A G12B G16A G33Z G38A G38B G38C
	07	H33Z
	08	I08B I28A I28B I28C I32C
	10	K09A K09B
	11	L09A L09B L33Z
	21B	X05Z X06A X06B X06C X07A X07B
39.31.19↔		BORP MBOR VAC VBOR
	04	E36A E36B
	05	F01A F01C F04Z F28A F59A F59B F59C F59D F59E F59F F59G
	06	G12A G12B G16A G38A G38B
	07	H33Z
	08	I08B I28A I28B I28C I32C
	10	K09A K09B
	11	L09A L09B L33Z
	21B	X05Z X06A X06B X06C X07A X07B
39.31.20↔		BORP MBOR VAC VBOR
	04	E36A E36B
	05	F01A F01C F04Z F28A F59A F59B F59C F59D F59E F59F F59G
	06	G12A G12B G16A G38A G38B
	07	H33Z
	08	I08B I28A I28B I28C I32C

PROC

CHOP	MDC	DRG
	10	K09A K09B
	11	L09A L09B L33Z
	21B	X05Z X06A X06B X06C X07A X07B
39.31.21↔		BORP MBOR VAC VBOR
	04	E36A E36B
	05	F01A F01C F04Z F28A F59A F59B F59C F59D F59E F59F F59G
	06	G12A G12B G16A G33Z G38A G38B G38C
	07	H33Z
	08	I08B I28A I28B I28C I32C
	10	K09A K09B
	11	L09A L09B L33Z
	21B	X05Z X06A X06B X06C X07A X07B
39.31.22↔		BORP MBOR VAC VBOR
	04	E36A E36B
	05	F01A F01C F04Z F28A F59A F59B F59C F59D F59E F59F F59G
	06	G12A G12B G16A G33Z G38A G38B G38C
	07	H33Z
	08	I08B I28A I28B I28C I32C
	10	K09A K09B
	11	L09A L09B L33Z
	21B	X05Z X06A X06B X06C X07A X07B
39.31.29↔		BORP MBOR VAC VBOR
	04	E36A E36B
	05	F01A F01C F04Z F28A F59A F59B F59C F59D F59E F59F F59G
	06	G12A G12B G16A G38A G38B
	07	H33Z
	08	I08B I28A I28B I28C I32C
	10	K09A K09B
	11	L09A L09B L33Z
	21B	X05Z X06A X06B X06C X07A X07B
39.31.30↔		BORP MBOR VAC VBOR
	04	E36A E36B
	05	F01A F01C F04Z F28A F59A F59B F59C F59D F59E F59F F59G
	06	G12A G12B G16A G38A G38B
	07	H33Z
	08	I02A I02B I02C I08B I28A I28B I28C I32A I32B I32C
	10	K09A K09B
	11	L09A L09B L33Z
	21B	X05Z X06A X06B X06C X07A X07B
39.31.40↔		BORP MBOR VAC VBOR
	04	E36A E36B
	05	F01A F01C F04Z F28A F59A F59B F59C F59D F59E F59F F59G
	06	G12A G12B G16A G38A G38B
	07	H33Z
	08	I02A I02B I02C I08B I28A I28B I28C I32A I32B I32C
	10	K09A K09B
	11	L09A L09B L33Z
	21B	X05Z X06A X06B X06C X07A X07B
39.31.50↔		BORP MBOR VAC VBOR
	04	E36A E36B
	05	F01A F01C F04Z F28A F59A F59B F59C F59D F59E F59F F59G
	06	G12A G12B G16A G38A G38B
	07	H33Z
	08	I08B I28A I28B I28C I32C
	10	K09A K09B
	11	L09A L09B L33Z
	21B	X05Z X06A X06B X06C X07A X07B
39.31.60↔		BORP MBOR VAC VBOR
	04	E01A E01B E05A E05B E05C E36A E36B
	05	F01A F01C F04Z F28A F59A F59B F59C F59D F59E F59F F59G
	06	G12A G12B G16A G33Z G38A G38B G38C
	07	H33Z
	08	I08B I28A I28B I28C I32C
	10	K09A K09B
	11	L09A L09B L33Z
	21B	X05Z X06A X06B X06C X07A X07B
39.31.61↔		BORP MBOR VAC VBOR
	04	E01A E01B E05A E05B E05C E36A E36B
	05	F01A F01C F04Z F28A F59A F59B F59C F59D F59E F59F F59G
	06	G12A G12B G16A G33Z G38A G38B G38C
	07	H33Z
	08	I08B I28A I28B I28C I32C
	10	K09A K09B
	11	L09A L09B L33Z
	21B	X05Z X06A X06B X06C X07A X07B
39.31.62↔		BORP MBOR VAC VBOR
	04	E01A E01B E05A E05B E05C E36A E36B
	05	F01A F01C F04Z F28A F59A F59B F59C F59D F59E F59F F59G
	06	G12A G12B G16A G33Z G38A G38B G38C
	07	H33Z
	08	I08B I28A I28B I28C I32C
	10	K09A K09B
	11	L09A L09B L33Z
	21B	X05Z X06A X06B X06C X07A X07B
39.31.69↔		BORP MBOR VAC VBOR
	04	E01A E01B E05A E05B E05C E36A E36B
	05	F01A F01C F04Z F28A F59A F59B F59C F59D F59E F59F F59G
	06	G12A G12B G16A G33Z G38A G38B G38C
	07	H33Z
	08	I08B I28A I28B I28C I32C
	10	K09A K09B
	11	L09A L09B L33Z
	21B	X05Z X06A X06B X06C X07A X07B
39.31.70↔		BORP MBOR VAC VBOR
	04	E36A E36B
	05	F01A F01C F04Z F28A F59A F59B F59C F59D F59E F59F F59G
	06	G12A G12B G16A G38A G38B
	07	H33Z
	08	I08B I28A I28B I28C I32C
	10	K09A K09B
	11	L09A L09B L33Z
	21B	X05Z X06A X06B X06C X07A X07B
39.31.71↔		BORP MBOR VAC VBOR
	04	E01A E01B E05A E05B E05C E36A E36B
	05	F01A F01C F04Z F28A F59A F59B F59C F59D F59E F59F F59G
	06	G12A G12B G16A G33Z G38A G38B G38C

CHOP	MDC	DRG
	07	H33Z
	08	I08B I28A I28B I28C I32C
	10	K09A K09B
	11	L09A L09B L33Z
	21B	X05Z X06A X06B X06C X07A X07B
39.31.72↔		BORP MBOR VAC VBOR
	04	E01A E01B E05A E05B E05C E36A E36B
	05	F01A F01C F04Z F28A F59A F59B F59C F59D F59E F59F F59G
	06	G12A G12B G16A G33Z G38A G38B G38C
	07	H33Z
	08	I08B I28A I28B I28C I32C
	10	K09A K09B
	11	L09A L09B L33Z
	21B	X05Z X06A X06B X06C X07A X07B
39.31.73↔		BORP MBOR VAC VBOR
	04	E01A E01B E05A E05B E05C E36A E36B
	05	F01A F01C F04Z F28A F59A F59B F59C F59D F59E F59F F59G
	06	G12A G12B G16A G33Z G38A G38B G38C
	07	H33Z
	08	I08B I28A I28B I28C I32C
	10	K09A K09B
	11	L09A L09B L33Z
	21B	X05Z X06A X06B X06C X07A X07B
39.31.79↔		BORP MBOR VAC VBOR
	04	E36A E36B
	05	F01A F01C F04Z F28A F59A F59B F59C F59D F59E F59F F59G
	06	G12A G12B G16A G38A G38B
	07	H33Z
	08	I08B I28A I28B I28C I32C
	10	K09A K09B
	11	L09A L09B L33Z
	21B	X05Z X06A X06B X06C X07A X07B
39.31.80↔		BORP MBOR VAC VBOR
	04	E36A E36B
	05	F01A F01C F04Z F28A F59A F59B F59C F59D F59E F59F F59G
	06	G12A G12B G16A G38A G38B
	07	H33Z
	08	I08B I28A I28B I28C I32C
	10	K09A K09B
	11	L09A L09B L33Z
	21B	X05Z X06A X06B X06C X07A X07B
39.31.81↔		BORP MBOR VAC VBOR
	04	E36A E36B
	05	F01A F01C F04Z F28A F59A F59B F59C F59D F59E F59F F59G
	06	G12A G12B G16A G38A G38B
	07	H33Z
	08	I08B I28A I28B I28C I32C
	10	K09A K09B
	11	L09A L09B L33Z
	21B	X05Z X06A X06B X06C X07A X07B
39.31.82↔		BORP MBOR VAC VBOR
	04	E36A E36B
	05	F01A F01C F04Z F28A F59A F59B F59C F59D F59E F59F F59G
	06	G12A G12B G16A G38A G38B
	07	H33Z
	08	I08B I28A I28B I28C I32C
	10	K09A K09B
	11	L09A L09B L33Z
	21B	X05Z X06A X06B X06C X07A X07B
39.31.83↔		BORP MBOR VAC VBOR
	04	E36A E36B
	05	F01A F01C F04Z F28A F59A F59B F59C F59D F59E F59F F59G
	06	G12A G12B G16A G38A G38B
	07	H33Z
	08	I08B I28A I28B I28C I32C
	10	K09A K09B
	11	L09A L09B L33Z
	21B	X05Z X06A X06B X06C X07A X07B
39.31.84↔		BORP MBOR VAC VBOR
	04	E36A E36B
	05	F01A F01C F04Z F28A F59A F59B F59C F59D F59E F59F F59G
	06	G12A G12B G16A G38A G38B
	07	H33Z
	08	I08B I28A I28B I28C I32C
	10	K09A K09B
	11	L09A L09B L33Z
	21B	X05Z X06A X06B X06C X07A X07B
39.31.85↔		BORP MBOR VAC VBOR
	04	E36A E36B
	05	F01A F01C F04Z F28A F59A F59B F59C F59D F59E F59F F59G
	06	G12A G12B G16A G38A G38B
	07	H33Z
	08	I08B I28A I28B I28C I32C
	10	K09A K09B
	11	L09A L09B L33Z
	21B	X05Z X06A X06B X06C X07A X07B
39.31.86↔		BORP MBOR VAC VBOR
	04	E36A E36B
	05	F01A F01C F04Z F28A F59A F59B F59C F59D F59E F59F F59G
	06	G12A G12B G16A G38A G38B
	07	H33Z
	08	I08B I28A I28B I28C I32C
	10	K09A K09B
	11	L09A L09B L33Z
	21B	X05Z X06A X06B X06C X07A X07B
39.31.87↔		BORP MBOR VAC VBOR
	04	E36A E36B
	05	F01A F01C F04Z F28A F59A F59B F59C F59D F59E F59F F59G
	06	G12A G12B G16A G38A G38B
	07	H33Z
	08	I08B I28A I28B I28C I32C
	10	K09A K09B
	11	L09A L09B L33Z
	21B	X05Z X06A X06B X06C X07A X07B
39.31.88↔		BORP MBOR VAC VBOR
	04	E36A E36B
	05	F01A F01C F04Z F28A F59A F59B F59C F59D F59E F59F F59G
	06	G12A G12B G16A G38A G38B
	07	H33Z
	08	I08B I28A I28B I28C I32C
	10	K09A K09B
	11	L09A L09B L33Z
	21B	X05Z X06A X06B X06C X07A X07B
39.31.89↔		BORP MBOR VAC VBOR
	04	E36A E36B
	05	F01A F01C F04Z F28A F59A F59B

PROC

CHOP	MDC	DRG
		F59C F59D F59E F59F F59G
	06	G12A G12B G16A G38A G38B
	07	H33Z
	08	I08B I28A I28B I28C I32C
	10	K09A K09B
	11	L09A L09B L33Z
	21B	X05Z X06A X06B X06C X07A X07B
39.32.11↔		BORP MBOR VAC VBOR
	04	E36A E36B
	05	F01A F01C F04Z F28A F59A F59B F59C F59D F59E F59F F59G
	06	G12A G16A G38A G38B
	08	I08B I28A I28B I28C
	21B	X06A X06B X06C
39.32.19↔		BORP MBOR VAC VBOR
	04	E36A E36B
	05	F01A F01C F04Z F28A F59A F59B F59C F59D F59E F59F F59G
	06	G12A G16A G38A G38B
	08	I08B I28A I28B I28C
	21B	X06A X06B X06C
39.32.30↔		BORP MBOR VAC VBOR
	04	E36A E36B
	05	F01A F01C F04Z F28A F59A F59B F59C F59D F59E F59F F59G
	06	G12A G16A G38A G38B
	08	I08B I28A I28B I28C
	21B	X06A X06B X06C
39.32.31↔		BORP MBOR VAC VBOR
	04	E36A E36B
	05	F01A F01C F04Z F28A F59A F59B F59C F59D F59E F59F F59G
	06	G12A G16A G38A G38B
	08	I08B I28A I28B I28C
	21B	X06A X06B X06C
39.32.32↔		BORP MBOR VAC VBOR
	04	E36A E36B
	05	F01A F01C F04Z F28A F59A F59B F59C F59D F59E F59F F59G
	06	G12A G16A G38A G38B
	08	I08B I28A I28B I28C
	21B	X06A X06B X06C
39.32.39↔		BORP MBOR VAC VBOR
	04	E36A E36B
	05	F01A F01C F04Z F28A F59A F59B F59C F59D F59E F59F F59G
	06	G12A G16A G38A G38B
	08	I08B I28A I28B I28C
	21B	X06A X06B X06C
39.32.40↔		BORP MBOR VAC VBOR
	04	E36A E36B
	05	F01A F01C F04Z F28A F59A F59B F59C F59D F59E F59F F59G
	06	G12A G16A G38A G38B
	08	I08B I28A I28B I28C
	21B	X06A X06B X06C
39.32.41↔		BORP MBOR VAC VBOR
	04	E36A E36B
	05	F01A F01C F04Z F28A F59A F59B F59C F59D F59E F59F F59G
	06	G12A G16A G38A G38B
	08	I08B I28A I28B I28C
	21B	X06A X06B X06C
39.32.42↔		BORP MBOR VAC VBOR
	04	E36A E36B
	05	F01A F01C F04Z F28A F59A F59B F59C F59D F59E F59F F59G
	06	G12A G16A G38A G38B
	08	I08B I28A I28B I28C
	21B	X06A X06B X06C
39.42.11↔	01	B04A B04B B04C
	05	F21A F21B F21C
	06	G12A G12B
	07	H06Z
	08	I28A I28B I28C
	09	J11A
	10	K09A K09B
	11	L09A L09B
	21B	X06A X06B X06C
	22	Y02A Y02B Y02C
39.42.12↔	01	B04A B04B B04C
	05	F21A F21B F21C
	06	G12A G12B
	07	H06Z
	08	I28A I28B I28C
	09	J11A
	10	K09A K09B
	11	L09A L09B
	21B	X06A X06B X06C
	22	Y02A Y02B Y02C
39.43↔	01	B04A B04B B04C
	05	F21A F21B F21C
	06	G12A G12B
	07	H06Z
	08	I28A I28B I28C
	09	J11A
	10	K09A K09B
	11	L09A L09B
	21B	X06A X06B X06C
	22	Y02A Y02B Y02C
39.49.10↔		BORP MBOR VAC VBOR
	04	E36A E36B
	05	F01A F01C F04Z F28A F59A F59B F59C F59D F59E F59F F59G
	06	G12A G12B G16A G38A G38B
	07	H33Z
	08	I02A I02B I02C I08B I28A I28B I28C I32A I32B I32C
	10	K09A K09B
	11	L09A L09B L33Z
	21B	X05Z X06A X06B X06C X07A X07B
39.49.21‡↔	01	B60A
	05	F21A F21B F21C
39.49.22‡↔	01	B60A
	05	F21A F21B F21C
39.49.23‡↔	01	B60A
	05	F21A F21B F21C
39.49.24‡↔	01	B60A
	05	F21A F21B F21C
39.49.30↔		BORP KORP MBOR MKOR VAC VAC I VAC II VBOR VKOR
	04	E02A E02B E02C E36A E36B
	05	F04Z F13A F13B F21A F21B F21C
	06	G12A G12B G16A G33Z G38A G38B G38C
	07	H33Z
	08	I08B I28A I28B I28C
	09	J02A J02B J03A J03B J04Z J11A J11B
	10	K09A K09B
	11	L09A L09B L33Z
	15	P02A P02B P02C
	21B	X04Z X05Z X06A X06B X06C X07A X07B
39.49.99‡↔	01	B60A
	05	F21A F21B F21C
39.50.00↔	01	B17A B17B
	03	D12A
	04	E02A E02B
	05	F01A F01C F04Z F21A F21B F21C F28A F59A F59B F59C F59D F59E F59F F59G
	06	G12A G12B
	07	H06Z
	08	I28A I28B

CHOP	MDC	DRG
	09	J11A
	10	K09A K09B
	11	L09A L09B
	12	M06Z M37Z
	13	N11A N11B
	14	O02A O02B
	21B	X04Z X05Z X06A
		X06B X06C
39.50.10↔	01	B17A B17B
	03	D12A
	04	E02A E02B
	05	F01A F01C F04Z
		F19Z F21A F21B
		F21C F28A F59A
		F59B F59C F59D
		F59E F59F F59G
	06	G12A G12B
	07	H06Z
	08	I28A I28B
	09	J11A
	10	K09A K09B
	11	L09A L09B
	12	M06Z M37Z
	13	N11A N11B
	14	O02A O02B
	21B	X04Z X05Z X06A
		X06B X06C
39.50.11↔	01	B17A B17B
	03	D12A
	04	E02A E02B
	05	F01A F01C F04Z
		F19Z F21A F21B
		F21C F28A F59A
		F59B F59C F59D
		F59E F59F F59G
	06	G12A G12B
	07	H06Z
	08	I28A I28B
	09	J11A
	10	K09A K09B
	11	L09A L09B
	12	M06Z M37Z
	13	N11A N11B
	14	O02A O02B
	21B	X04Z X05Z X06A
		X06B X06C
39.50.12↔	01	B17A B17B
	03	D12A
	04	E02A E02B
	05	F01A F01C F04Z
		F19Z F21A F21B
		F21C F28A F59A
		F59B F59C F59D
		F59E F59F F59G
	06	G12A G12B
	07	H06Z
	08	I28A I28B
	09	J11A
	10	K09A K09B
	11	L09A L09B
	12	M06Z M37Z
	13	N11A N11B
	14	O02A O02B
	21B	X04Z X05Z X06A
		X06B X06C
39.50.13↔	01	B17A B17B
	03	D12A
	04	E02A E02B
	05	F01A F01C F04Z
		F19Z F21A F21B
		F21C F28A F59A
		F59B F59C F59D
		F59E F59F F59G
	06	G12A G12B
	07	H06Z
	08	I28A I28B
	09	J11A
	10	K09A K09B
	11	L09A L09B
	12	M06Z M37Z
	13	N11A N11B
	14	O02A O02B
	21B	X04Z X05Z X06A
		X06B X06C
39.50.14↔	01	B17A B17B
	03	D12A
	04	E02A E02B
	05	F01A F01C F04Z
		F19Z F21A F21B
		F21C F28A F59A
		F59B F59C F59D
		F59E F59F F59G
	06	G12A G12B
	07	H06Z
	08	I28A I28B
	09	J11A
	10	K09A K09B
	11	L09A L09B
	12	M06Z M37Z
	13	N11A N11B
	14	O02A O02B
	21B	X04Z X05Z X06A
		X06B X06C
39.50.15↔	01	B17A B17B
	03	D12A
	04	E02A E02B
	05	F01A F01C F04Z
		F19Z F21A F21B
		F21C F28A F59A
		F59B F59C F59D
		F59E F59F
	06	G12A G12B
	07	H06Z
	08	I28A I28B
	09	J11A
	10	K09A K09B
	11	L09A L09B
	12	M06Z M37Z
	13	N11A N11B
	14	O02A O02B
	21B	X04Z X05Z X06A
		X06B X06C
39.50.19↔	01	B17A B17B
	03	D12A
	04	E02A E02B
	05	F01A F01C F04Z
		F19Z F21A F21B
		F21C F28A F59A
		F59B F59C F59D
		F59E F59F F59G
	06	G12A G12B
	07	H06Z
	08	I28A I28B
	09	J11A
	10	K09A K09B
	11	L09A L09B
	12	M06Z M37Z
	13	N11A N11B
	14	O02A O02B
	21B	X04Z X05Z X06A
		X06B X06C
39.50.20↔	01	B17A B17B
	03	D12A
	04	E02A E02B
	05	F01A F01C F04Z
		F21A F21B F21C
		F28A F59A F59B
		F59C F59D F59E
		F59F F59G
	06	G12A G12B
	07	H06Z
	08	I28A I28B
	09	J11A
	10	K09A K09B
	11	L09A L09B
	12	M06Z M37Z
	13	N11A N11B
	14	O02A O02B
	21B	X04Z X05Z X06A
		X06B X06C
39.50.21↔	01	B17A B17B
	03	D12A
	04	E02A E02B
	05	F01A F01C F04Z
		F21A F21B F21C
		F28A F59A F59B
		F59C F59D F59E
		F59F F59G
	06	G12A G12B
	07	H06Z
	08	I28A I28B
	09	J11A
	10	K09A K09B
	11	L09A L09B
	12	M06Z M37Z
	13	N11A N11B
	14	O02A O02B
	21B	X04Z X05Z X06A
		X06B X06C
39.50.99↔	01	B17A B17B
	03	D12A
	04	E02A E02B
	05	F01A F01C F04Z
		F21A F21B F21C
		F28A F59A F59B
		F59C F59D F59E
		F59F F59G
	06	G12A G12B
	07	H06Z
	08	I28A I28B
	09	J11A
	10	K09A K09B
	11	L09A L09B
	12	M06Z M37Z
	13	N11A N11B
	14	O02A O02B
	21B	X04Z X05Z X06A
		X06B X06C
39.51.00↔		BORP KORP MBOR
		MKOR VAC VAC I
		VAC II VBOR VKOR
	01	B01A B02A B02B
		B20A B20B B20C
	04	E36A E36B
	05	F01A F01C F04Z
		F28A F59A F59B
		F59C F59D F59E
		F59F
	06	G12A G16A G38A
		G38B

PROC

PROC

CHOP	MDC	DRG
	07	H33Z
	11	L33Z
	21A	W01A W01B W01C
	21B	X06A X06B X06C X07A X07B
39.51.11↔		BORP KORP MBOR MKOR VAC VAC I VAC II VBOR VKOR
	01	B01A B02A B02B B20A B20B B20C
	04	E36A E36B
	05	F01A F01C F04Z F28A F59A F59B F59C F59D F59E F59F
	06	G12A G16A G33Z G38A G38B G38C
	07	H33Z
	11	L33Z
	21A	W01A W01B W01C
	21B	X06A X06B X06C X07A X07B
39.51.99↔		BORP KORP MBOR MKOR VAC VAC I VAC II VBOR VKOR
	01	B01A B02A B02B B20A B20B B20C
	04	E36A E36B
	05	F01A F01C F04Z F28A F59A F59B F59C F59D F59E F59F
	06	G12A G16A G38A G38B
	07	H33Z
	11	L33Z
	21A	W01A W01B W01C
	21B	X06A X06B X06C X07A X07B
39.52.00↔	05	F01A F01C F04Z F28A F59A F59B F59C F59D F59E F59F
	06	G02A G02B G38A G38B G38C
	07	H33Z
	08	I08B I28A I28B I28C
	10	K09A K09B
	11	L33Z
	21B	X06A X06B X06C X07A X07B
39.52.11↔		BORP KORP MBOR MKOR VAC VAC I VAC II VBOR VKOR
	01	B01A B02A B02B B20A B20B B20C B20D
	04	E36A E36B
	05	F01A F01C F04Z F28A F59A F59B F59C F59D F59E F59F
	06	G02A G02B G12A G16A G33Z G38A G38B G38C
	07	H33Z
	08	I08B I28A I28B I28C
	10	K09A K09B
	11	L33Z
	21B	X06A X06B X06C X07A X07B
39.52.19↔		BORP KORP MBOR MKOR VAC VAC I VAC II VBOR VKOR
	01	B01A B01B B04A B04B B04C
	04	E36A E36B
	05	F01A F01C F04Z F28A F59A F59B F59C F59D F59E F59F
	06	G02A G02B G12A G16A G33Z G38A G38B G38C
	07	H33Z
	08	I08B I28A I28B I28C
	10	K09A K09B
	11	L33Z
	21B	X06A X06B X06C X07A X07B
39.52.20↔		BORP KORP MBOR MKOR VAC VAC I VAC II VBOR VKOR
	04	E01A E01B E05A E05B E05C E36A E36B
	05	F01A F01C F04Z F28A F59A F59B F59C F59D F59E F59F
	06	G02A G02B G12A G16A G33Z G38A G38B G38C
	07	H33Z
	08	I08B I28A I28B I28C
	10	K09A K09B
	11	L33Z
	21B	X06A X06B X06C X07A X07B
39.52.21↔		BORP KORP MBOR MKOR VAC VAC I VAC II VBOR VKOR
	04	E01A E01B E05A E05B E05C E36A E36B
	05	F01A F01C F04Z F28A F59A F59B F59C F59D F59E F59F
	06	G02A G02B G12A G16A G33Z G38A G38B G38C
	07	H33Z
	08	I08B I28A I28B I28C
	10	K09A K09B
	11	L33Z
	21B	X06A X06B X06C X07A X07B
39.52.22↔		BORP KORP MBOR MKOR VAC VAC I VAC II VBOR VKOR
	04	E01A E01B E05A E05B E05C E36A E36B
	05	F01A F01C F04Z F28A F59A F59B F59C F59D F59E F59F
	06	G02A G02B G12A G16A G33Z G38A G38B G38C
	07	H33Z
	08	I08B I28A I28B I28C
	10	K09A K09B
	11	L33Z
	21B	X06A X06B X06C X07A X07B
39.52.29↔		BORP KORP MBOR MKOR VAC VAC I VAC II VBOR VKOR
	04	E01A E01B E05A E05B E05C E36A E36B
	05	F01A F01C F04Z F28A F59A F59B F59C F59D F59E F59F
	06	G12A G16A G33Z G38A G38B G38C
	07	H33Z
	08	I08B I28A I28B I28C
	10	K09A K09B
	11	L33Z
	21B	X06A X06B X06C X07A X07B
39.52.99↔	03	D12A
	04	E02A E02B
	05	F21A F21B F21C F59A
	06	G12A G12B
	07	H06Z
	08	I28A I28B
	09	J11A
	10	K09A K09B
	11	L09A L09B
	12	M06Z M37Z
	13	N11A N11B
	14	O02A O02B
	21B	X06A X06B X06C
39.53↔		BORP KORP MBOR MKOR VAC VAC I VAC II VBOR VKOR
	01	B01A B02A B02B B20A B20B B20C B20D
	04	E36A E36B
	05	F01A F01C F04Z F28A F59A F59B F59C F59D F59E F59F
	06	G12A G16A G33Z G38A G38B G38C
	07	H33Z
	08	I08B I28A I28B I28C
	11	L09A L09B L33Z
	21B	X06A X06B X06C
39.54.00↔	05	F01A F01C F04Z F28A F59A F59B F59C F59D F59E F59F
	06	G02A G02B G38A G38B G38C

CHOP	MDC	DRG
	07	H33Z
	08	I08B I28A I28B I28C
	10	K09A K09B
	11	L33Z
	21B	X06A X06B X06C X07A X07B
39.54.09↔	05	F01A F01C F04Z F28A F59A F59B F59C F59D F59E F59F
	07	H33Z
	08	I08B I28A I28B I28C
	10	K09A K09B
	11	L33Z
	21B	X06A X06B X06C X07A X07B
39.54.11↔		BORP KORP MBOR MKOR VAC VAC I VAC II VBOR VKOR
	04	E36A E36B
	05	F01A F01C F04Z F28A F59A F59B F59C F59D F59E F59F
	06	G02A G02B G12A G16A G33Z G38A G38B G38C
	07	H33Z
	08	I08B I28A I28B I28C
	10	K09A K09B
	11	L33Z
	21B	X06A X06B X06C X07A X07B
39.54.12↔		BORP KORP MBOR MKOR VAC VAC I VAC II VBOR VKOR
	04	E36A E36B
	05	F01A F01C F04Z F28A F59A F59B F59C F59D F59E F59F
	06	G02A G02B G12A G16A G33Z G38A G38B G38C
	07	H33Z
	08	I08B I28A I28B I28C
	10	K09A K09B
	11	L33Z
	21B	X06A X06B X06C X07A X07B
39.54.21↔		BORP KORP MBOR MKOR VAC VAC I VAC II VBOR VKOR
	04	E36A E36B
	05	F01A F01C F04Z F28A F59A F59B F59C F59D F59E F59F
	06	G02A G02B G12A G16A G33Z G38A G38B G38C
	07	H33Z
	08	I08B I28A I28B I28C
	10	K09A K09B
	11	L33Z
	21B	X06A X06B X06C X07A X07B
39.54.22↔		BORP KORP MBOR MKOR VAC VAC I VAC II VBOR VKOR
	04	E36A E36B
	05	F01A F01C F04Z F28A F59A F59B F59C F59D F59E F59F
	06	G02A G02B G12A G16A G33Z G38A G38B G38C
	07	H33Z
	08	I08B I28A I28B I28C
	10	K09A K09B
	11	L33Z
	21B	X06A X06B X06C X07A X07B
39.54.91↔	05	F01A F01C F04Z F28A F59A F59B F59C F59D F59E F59F
	07	H33Z
	08	I08B I28A I28B I28C
	10	K09A K09B
	11	L33Z
	21B	X06A X06B X06C X07A X07B
39.54.92↔	05	F01A F01C F04Z F28A F59A F59B F59C F59D F59E F59F
	07	H33Z
	08	I08B I28A I28B I28C
	10	K09A K09B
	11	L33Z
	21B	X06A X06B X06C X07A X07B
39.55↔		BORP MBOR VAC VAC I VAC II VBOR
	04	E36A E36B
	05	F01A F01C F04Z F28A F59A F59B F59C F59D F59E F59F
	06	G12A G12B G16A G38A G38B
	08	I08B I28A I28B I28C
	09	J02A J02B J03A J03B J04Z J11A J11B
	10	K09A K09B
	11	L09A L09B
	21B	X06A X06B X06C
39.56.00↔		BORP MBOR VAC VBOR
	04	E36A E36B
	05	F01A F01C F04Z F06A F06B F28A F59A F59B F59C F59D F59E F59F
	06	G12A G16A G16B G18A G18B G19A G19B G38A G38B G38C
	07	H06Z H33Z
	08	I08B I28A I28B I28C
	10	K09A K09B
	11	L09A L09B L33Z
	15	P02A P02B P02C
	21B	X04Z X05Z X06A X06B X06C X07A X07B
39.56.11↔		BORP MBOR VAC VBOR
	01	B01A B20A B20B B20C B20D
	04	E36A E36B
	05	F01A F01C F04Z F06A F06B F28A F59A F59B F59C F59D F59E F59F
	06	G12A G16A G16B G18A G18B G19A G19B G38A G38B G38C
	07	H06Z H33Z
	08	I08B I28A I28B I28C
	10	K09A K09B
	11	L09A L09B L33Z
	15	P02A P02B P02C
	21B	X04Z X05Z X06A X06B X06C X07A X07B
39.56.12↔		BORP MBOR VAC VBOR
	01	B01A B01B B04A B04B B04C
	04	E36A E36B
	05	F01A F01C F04Z F06A F06B F28A F59A F59B F59C F59D F59E F59F
	06	G12A G16A G16B G18A G18B G19A G19B G38A G38B G38C
	07	H06Z H33Z
	08	I08B I28A I28B I28C
	10	K09A K09B
	11	L09A L09B L33Z
	15	P02A P02B P02C
	21B	X04Z X05Z X06A X06B X06C X07A X07B
39.56.19↔		BORP MBOR VAC VBOR
	01	B01A B01B B04A B04B B04C
	04	E36A E36B
	05	F01A F01C F04Z F06A F06B F28A F59A F59B F59C F59D F59E F59F
	06	G12A G16A G16B G18A G18B G19A G19B G38A G38B G38C
	07	H06Z H33Z
	08	I08B I28A I28B I28C
	10	K09A K09B

PROC

PROC

CHOP	MDC	DRG
	11	L09A L09B L33Z
	15	P02A P02B P02C
	21B	X04Z X05Z X06A X06B X06C X07A X07B
39.56.20↔		BORP MBOR VAC VBOR
	04	E36A E36B
	05	F01A F01C F04Z F06A F06B F28A F59A F59B F59C F59D F59E F59F
	06	G12A G16A G16B G18A G18B G19A G19B G38A G38B G38C
	07	H06Z H33Z
	08	I08B I28A I28B I28C
	10	K09A K09B
	11	L09A L09B L33Z
	15	P02A P02B P02C
	21B	X04Z X05Z X06A X06B X06C X07A X07B
39.56.21↔		BORP MBOR VAC VBOR
	04	E36A E36B
	05	F01A F01C F04Z F06A F06B F28A F59A F59B F59C F59D F59E F59F
	06	G12A G16A G16B G18A G18B G19A G19B G38A G38B G38C
	07	H06Z H33Z
	08	I08B I28A I28B I28C
	10	K09A K09B
	11	L09A L09B L33Z
	15	P02A P02B P02C
	21B	X04Z X05Z X06A X06B X06C X07A X07B
39.56.22↔		BORP MBOR VAC VBOR
	04	E36A E36B
	05	F01A F01C F04Z F06A F06B F28A F59A F59B F59C F59D F59E F59F
	06	G12A G16A G16B G18A G18B G19A G19B G38A G38B G38C
	07	H06Z H33Z
	08	I08B I28A I28B I28C
	10	K09A K09B
	11	L09A L09B L33Z
	15	P02A P02B P02C
	21B	X04Z X05Z X06A X06B X06C X07A X07B
39.56.23↔		BORP MBOR VAC VBOR
	04	E36A E36B
	05	F01A F01C F04Z F06A F06B F28A F59A F59B F59C F59D F59E F59F
	06	G12A G16A G16B G18A G18B G19A G19B G38A G38B G38C
	07	H06Z H33Z
	08	I08B I28A I28B I28C
	10	K09A K09B
	11	L09A L09B L33Z
	15	P02A P02B P02C
	21B	X04Z X05Z X06A X06B X06C X07A X07B
39.56.29↔		BORP MBOR VAC VBOR
	04	E36A E36B
	05	F01A F01C F04Z F06A F06B F28A F59A F59B F59C F59D F59E F59F
	06	G12A G16A G16B G18A G18B G19A G19B G38A G38B G38C
	07	H06Z H33Z
	08	I08B I28A I28B I28C
	10	K09A K09B
	11	L09A L09B L33Z
	15	P02A P02B P02C
	21B	X04Z X05Z X06A X06B X06C X07A X07B
39.56.30↔		BORP MBOR VAC VBOR
	04	E36A E36B
	05	F01A F01C F04Z F06A F06B F31A F31B F31C F31D F90A
	06	G12A G16A G16B G18A G18B G19A G19B G38A G38B G38C
	07	H06Z H33Z
	08	I08B I28A I28B I28C
	10	K09A K09B
	11	L09A L09B L33Z
	15	P02A P02B P02C
	21B	X04Z X05Z X06A X06B X06C X07A X07B
39.56.31↔		BORP KORP MBOR MKOR VAC VBOR VKOR
	04	E36A E36B
	05	F01A F01C F04Z F06A F06B F31A F31B F31C F31D F90A
	06	G12A G16A G16B G18A G18B G19A G19B G38A G38B G38C
	07	H06Z H33Z
	08	I08B I28A I28B I28C
	10	K09A K09B
	11	L09A L09B L33Z
	15	P02A P02B P02C
	21B	X04Z X05Z X06A X06B X06C X07A X07B
39.56.32↔		BORP MBOR VAC VBOR
	04	E36A E36B
	05	F01A F01C F04Z F06A F06B F31A F31B F31C F31D F90A
	06	G12A G16A G16B G18A G18B G19A G19B G38A G38B G38C
	07	H06Z H33Z
	08	I08B I28A I28B I28C
	10	K09A K09B
	11	L09A L09B L33Z
	15	P02A P02B P02C
	21B	X04Z X05Z X06A X06B X06C X07A X07B
39.56.33↔		BORP MBOR VAC VBOR
	04	E36A E36B
	05	F01A F01C F04Z F06A F06B F31A F31B F31C F31D F90A
	06	G12A G16A G16B G18A G18B G19A G19B G38A G38B G38C
	07	H06Z H33Z
	08	I08B I28A I28B I28C
	10	K09A K09B
	11	L09A L09B L33Z
	15	P02A P02B P02C
	21B	X04Z X05Z X06A X06B X06C X07A X07B
39.56.39↔		BORP MBOR VAC VBOR
	04	E36A E36B
	05	F01A F01C F04Z F06A F06B F31A F31B F31C F31D F90A
	06	G12A G16A G16B G18A G18B G19A G19B G38A G38B G38C
	07	H06Z H33Z
	08	I08B I28A I28B I28C
	10	K09A K09B
	11	L09A L09B L33Z
	15	P02A P02B P02C
	21B	X04Z X05Z X06A X06B X06C X07A X07B
39.56.40↔		BORP MBOR VAC VBOR
	04	E36A E36B
	05	F01A F01C F04Z

CHOP	MDC	DRG
		F06A F06B F28A F59A F59B F59C F59D F59E F59F
	06	G12A G16A G16B G18A G18B G19A G19B G38A G38B G38C
	07	H06Z H33Z
	08	I08B I28A I28B I28C
	10	K09A K09B
	11	L09A L09B L33Z
	15	P02A P02B P02C
	21B	X04Z X05Z X06A X06B X06C X07A X07B
39.56.41↔		BORP MBOR VAC VBOR
	04	E36A E36B
	05	F01A F01C F04Z F06A F06B F28A F59A F59B F59C F59D F59E F59F
	06	G12A G16A G16B G18A G18B G19A G19B G38A G38B G38C
	07	H06Z H33Z
	08	I08B I28A I28B I28C
	10	K09A K09B
	11	L09A L09B L33Z
	15	P02A P02B P02C
	21B	X04Z X05Z X06A X06B X06C X07A X07B
39.56.42↔		BORP MBOR VAC VBOR
	04	E36A E36B
	05	F01A F01C F04Z F06A F06B F28A F59A F59B F59C F59D F59E F59F
	06	G12A G16A G16B G18A G18B G19A G19B G38A G38B G38C
	07	H06Z H33Z
	08	I08B I28A I28B I28C
	10	K09A K09B
	11	L09A L09B L33Z
	15	P02A P02B P02C
	21B	X04Z X05Z X06A X06B X06C X07A X07B
39.56.43↔		BORP MBOR VAC VBOR
	04	E36A E36B
	05	F01A F01C F04Z F06A F06B F28A F59A F59B F59C F59D F59E F59F
	06	G12A G16A G16B G18A G18B G19A G19B G38A G38B G38C
	07	H06Z H33Z
	08	I08B I28A I28B I28C
	10	K09A K09B
	11	L09A L09B L33Z
	15	P02A P02B P02C
	21B	X04Z X05Z X06A X06B X06C X07A X07B
39.56.44↔		BORP MBOR VAC VBOR
	04	E36A E36B
	05	F01A F01C F04Z F06A F06B F28A F59A F59B F59C F59D F59E F59F
	06	G12A G16A G16B G18A G18B G19A G19B G38A G38B G38C
	07	H06Z H33Z
	08	I08B I28A I28B I28C
	10	K09A K09B
	11	L09A L09B L33Z
	15	P02A P02B P02C
	21B	X04Z X05Z X06A X06B X06C X07A X07B
39.56.45↔		BORP MBOR VAC VBOR
	04	E36A E36B
	05	F01A F01C F04Z F06A F06B F28A F59A F59B F59C F59D F59E F59F
	06	G12A G16A G16B G18A G18B G19A G19B G38A G38B G38C
	07	H06Z H33Z
	08	I08B I28A I28B I28C
	10	K09A K09B
	11	L09A L09B L33Z
	15	P02A P02B P02C
	21B	X04Z X05Z X06A X06B X06C X07A X07B
39.56.46↔		BORP MBOR VAC VBOR
	04	E36A E36B
	05	F01A F01C F04Z F06A F06B F28A F59A F59B F59C F59D F59E F59F
	06	G12A G16A G16B G18A G18B G19A G19B G38A G38B G38C
	07	H06Z H33Z
	08	I08B I28A I28B I28C
	10	K09A K09B
	11	L09A L09B L33Z
	15	P02A P02B P02C
	21B	X04Z X05Z X06A X06B X06C X07A X07B
39.56.47↔		BORP MBOR VAC VBOR
	04	E36A E36B
	05	F01A F01C F04Z F06A F06B F28A F59A F59B F59C F59D F59E F59F
	06	G12A G16A G16B G18A G18B G19A G19B G38A G38B G38C
	07	H06Z H33Z
	08	I08B I28A I28B I28C
	10	K09A K09B
	11	L09A L09B L33Z
	15	P02A P02B P02C
	21B	X04Z X05Z X06A X06B X06C X07A X07B
39.56.48↔		BORP MBOR VAC VBOR
	04	E36A E36B
	05	F01A F01C F04Z F06A F06B F28A F59A F59B F59C F59D F59E F59F
	06	G12A G16A G16B G18A G18B G19A G19B G38A G38B G38C
	07	H06Z H33Z
	08	I08B I28A I28B I28C
	10	K09A K09B
	11	L09A L09B L33Z
	15	P02A P02B P02C
	21B	X04Z X05Z X06A X06B X06C X07A X07B
39.56.49↔		BORP MBOR VAC VBOR
	04	E36A E36B
	05	F01A F01C F04Z F06A F06B F28A F59A F59B F59C F59D F59E F59F
	06	G12A G16A G16B G18A G18B G19A G19B G38A G38B G38C
	07	H06Z H33Z
	08	I08B I28A I28B I28C
	10	K09A K09B
	11	L09A L09B L33Z
	15	P02A P02B P02C
	21B	X04Z X05Z X06A X06B X06C X07A X07B
39.56.50↔		BORP MBOR VAC VBOR
	04	E36A E36B
	05	F01A F01C F04Z F06A F06B F28A F59A F59B F59C F59D F59E F59F
	06	G12A G16A G16B G18A G18B G19A G19B G38A G38B G38C
	07	H06Z H33Z
	08	I08B I28A I28B I28C

PROC

CHOP	MDC	DRG
	10	K09A K09B
	11	L09A L09B L33Z
	15	P02A P02B P02C
	21B	X04Z X05Z X06A X06B X06C X07A X07B
39.56.51↔		BORP MBOR VAC VBOR
	04	E36A E36B
	05	F01A F01C F04Z F06A F06B F28A F59A F59B F59C F59D F59E F59F
	06	G12A G16A G16B G18A G18B G19A G19B G38A G38B G38C
	07	H06Z H33Z
	08	I08B I28A I28B I28C
	10	K09A K09B
	11	L09A L09B L33Z
	15	P02A P02B P02C
	21B	X04Z X05Z X06A X06B X06C X07A X07B
39.56.52↔		BORP MBOR VAC VBOR
	04	E36A E36B
	05	F01A F01C F04Z F06A F06B F28A F59A F59B F59C F59D F59E F59F
	06	G12A G16A G16B G18A G18B G19A G19B G38A G38B G38C
	07	H06Z H33Z
	08	I08B I28A I28B I28C
	10	K09A K09B
	11	L09A L09B L33Z
	15	P02A P02B P02C
	21B	X04Z X05Z X06A X06B X06C X07A X07B
39.56.59↔		BORP MBOR VAC VBOR
	04	E36A E36B
	05	F01A F01C F04Z F06A F06B F28A F59A F59B F59C F59D F59E F59F
	06	G12A G16A G16B G18A G18B G19A G19B G38A G38B G38C
	07	H06Z H33Z
	08	I08B I28A I28B I28C
	10	K09A K09B
	11	L09A L09B L33Z
	15	P02A P02B P02C
	21B	X04Z X05Z X06A X06B X06C X07A X07B
39.56.60↔		BORP MBOR VAC VBOR
	04	E36A E36B
	05	F01A F01C F04Z F06A F06B F28A F59A F59B F59C F59D F59E F59F
	06	G12A G16A G16B G18A G18B G19A G19B G38A G38B G38C
	07	H06Z H33Z
	08	I08B I28A I28B I28C
	10	K09A K09B
	11	L09A L09B L33Z
	15	P02A P02B P02C
	21B	X04Z X05Z X06A X06B X06C X07A X07B
39.56.61↔		BORP MBOR VAC VBOR
	04	E36A E36B
	05	F01A F01C F04Z F06A F06B F28A F59A F59B F59C F59D F59E F59F
	06	G12A G16A G16B G18A G18B G19A G19B G38A G38B G38C
	07	H06Z H33Z
	08	I08B I28A I28B I28C
	10	K09A K09B
	11	L09A L09B L33Z
	15	P02A P02B P02C
	21B	X04Z X05Z X06A X06B X06C X07A X07B
39.56.62↔		BORP MBOR VAC VBOR
	04	E36A E36B
	05	F01A F01C F04Z F06A F06B F28A F59A F59B F59C F59D F59E F59F
	06	G12A G16A G16B G18A G18B G19A G19B G38A G38B G38C
	07	H06Z H33Z
	08	I08B I28A I28B I28C
	10	K09A K09B
	11	L09A L09B L33Z
	15	P02A P02B P02C
	21B	X04Z X05Z X06A X06B X06C X07A X07B
39.56.63↔		BORP MBOR VAC VBOR
	04	E36A E36B
	05	F01A F01C F04Z F06A F06B F28A F59A F59B F59C F59D F59E F59F
	06	G12A G16A G16B G18A G18B G19A G19B G38A G38B G38C
	07	H06Z H33Z
	08	I08B I28A I28B I28C
	10	K09A K09B
	11	L09A L09B L33Z
	15	P02A P02B P02C
	21B	X04Z X05Z X06A X06B X06C X07A X07B
39.56.64↔		BORP MBOR VAC VBOR
	04	E36A E36B
	05	F01A F01C F04Z F06A F06B F28A F59A F59B F59C F59D F59E F59F
	06	G12A G16A G16B G18A G18B G19A G19B G38A G38B G38C
	07	H06Z H33Z
	08	I08B I28A I28B I28C
	10	K09A K09B
	11	L09A L09B L33Z
	15	P02A P02B P02C
	21B	X04Z X05Z X06A X06B X06C X07A X07B
39.56.69↔		BORP MBOR VAC VBOR
	04	E36A E36B
	05	F01A F01C F04Z F06A F06B F28A F59A F59B F59C F59D F59E F59F
	06	G12A G16A G16B G18A G18B G19A G19B G38A G38B G38C
	07	H06Z H33Z
	08	I08B I28A I28B I28C
	10	K09A K09B
	11	L09A L09B L33Z
	15	P02A P02B P02C
	21B	X04Z X05Z X06A X06B X06C X07A X07B
39.56.99↔		BORP MBOR VAC VBOR
	04	E36A E36B
	05	F01A F01C F04Z F06A F06B F28A F59A F59B F59C F59D F59E F59F
	06	G12A G16A G16B G18A G18B G19A G19B G38A G38B G38C
	07	H06Z H33Z
	08	I08B I28A I28B I28C
	10	K09A K09B
	11	L09A L09B L33Z
	15	P02A P02B P02C
	21B	X04Z X05Z X06A X06B X06C X07A X07B
39.57.00↔		BORP MBOR VAC VAC I VAC II VBOR
	04	E36A E36B
	05	F01A F01C F04Z

CHOP	MDC	DRG
		F06A F06B F28A
		F59A F59B F59C
		F59D F59E F59F
	06	G12A G16A G16B
		G18A G18B G19A
		G19B G33Z G38A
		G38B G38C
	07	H06Z H33Z
	08	I08B I28A I28B
		I28C
	10	K09A K09B
	11	L09A L09B L33Z
	15	P02A P02B P02C
	21B	X04Z X05Z X06A
		X06B X06C X07A
		X07B
39.57.11↔		BORP MBOR VAC
		VAC I VAC II VBOR
	01	B01A B20A B20B
		B20C B20D
	04	E36A E36B
	05	F01A F01C F04Z
		F06A F06B F28A
		F59A F59B F59C
		F59D F59E F59F
	06	G12A G16A G16B
		G18A G18B G19A
		G19B G33Z G38A
		G38B G38C
	07	H06Z H33Z
	08	I08B I28A I28B
		I28C
	10	K09A K09B
	11	L09A L09B L33Z
	15	P02A P02B P02C
	21B	X04Z X05Z X06A
		X06B X06C X07A
		X07B
39.57.12↔		BORP MBOR VAC
		VAC I VAC II VBOR
	01	B01A B01B B04A
		B04B B04C
	04	E36A E36B
	05	F01A F01C F04Z
		F06A F06B F28A
		F59A F59B F59C
		F59D F59E F59F
	06	G12A G16A G16B
		G18A G18B G19A
		G19B G33Z G38A
		G38B G38C
	07	H06Z H33Z
	08	I08B I28A I28B
		I28C
	10	K09A K09B
	11	L09A L09B L33Z
	15	P02A P02B P02C
	21B	X04Z X05Z X06A
		X06B X06C X07A
		X07B
39.57.13↔		BORP MBOR VAC
		VAC I VAC II VBOR
	01	B01A B01B B04A
		B04B B04C
	04	E36A E36B
	05	F01A F01C F04Z
		F06A F06B F28A
		F59A F59B F59C
		F59D F59E F59F
	06	G12A G16A G16B
		G18A G18B G19A
		G19B G33Z G38A
		G38B G38C
	07	H06Z H33Z
	08	I08B I28A I28B
		I28C
	10	K09A K09B
	11	L09A L09B L33Z
	15	P02A P02B P02C
	21B	X04Z X05Z X06A
		X06B X06C X07A
		X07B
39.57.19↔		BORP MBOR VAC
		VAC I VAC II VBOR
	01	B01A B01B B04A
		B04B B04C
	04	E36A E36B
	05	F01A F01C F04Z
		F06A F06B F28A
		F59A F59B F59C
		F59D F59E F59F
	06	G12A G16A G16B
		G18A G18B G19A
		G19B G33Z G38A
		G38B G38C
	07	H06Z H33Z
	08	I08B I28A I28B
		I28C
	10	K09A K09B
	11	L09A L09B L33Z
	15	P02A P02B P02C
	21B	X04Z X05Z X06A
		X06B X06C X07A
		X07B
39.57.20↔		BORP MBOR VAC
		VAC I VAC II VBOR
	04	E36A E36B
	05	F01A F01C F04Z
		F06A F06B F28A
		F59A F59B F59C
		F59D F59E F59F
	06	G12A G16A G16B
		G18A G18B G19A
		G19B G33Z G38A
		G38B G38C
	07	H06Z H33Z
	08	I08B I28A I28B
		I28C
	10	K09A K09B
	11	L09A L09B L33Z
	15	P02A P02B P02C
	21B	X04Z X05Z X06A
		X06B X06C X07A
		X07B
39.57.21↔		BORP MBOR VAC
		VAC I VAC II VBOR
	04	E36A E36B
	05	F01A F01C F04Z
		F06A F06B F28A
		F59A F59B F59C
		F59D F59E F59F
	06	G12A G16A G16B
		G18A G18B G19A
		G19B G33Z G38A
		G38B G38C
	07	H06Z H33Z
	08	I08B I28A I28B
		I28C
	10	K09A K09B
	11	L09A L09B L33Z
	15	P02A P02B P02C
	21B	X04Z X05Z X06A
		X06B X06C X07A
		X07B
39.57.22↔		BORP MBOR VAC
		VAC I VAC II VBOR
	04	E36A E36B
	05	F01A F01C F04Z
		F06A F06B F28A
		F59A F59B F59C
		F59D F59E F59F
	06	G12A G16A G16B
		G18A G18B G19A
		G19B G33Z G38A
		G38B G38C
	07	H06Z H33Z
	08	I08B I28A I28B
		I28C
	10	K09A K09B
	11	L09A L09B L33Z
	15	P02A P02B P02C
	21B	X04Z X05Z X06A
		X06B X06C X07A
		X07B
39.57.23↔		BORP MBOR VAC
		VAC I VAC II VBOR
	04	E36A E36B
	05	F01A F01C F04Z
		F06A F06B F28A
		F59A F59B F59C
		F59D F59E F59F
	06	G12A G16A G16B
		G18A G18B G19A
		G19B G33Z G38A
		G38B G38C
	07	H06Z H33Z
	08	I08B I28A I28B
		I28C
	10	K09A K09B
	11	L09A L09B L33Z
	15	P02A P02B P02C
	21B	X04Z X05Z X06A
		X06B X06C X07A
		X07B
39.57.29↔		BORP MBOR VAC
		VAC I VAC II VBOR
	04	E36A E36B
	05	F01A F01C F04Z
		F06A F06B F28A
		F59A F59B F59C
		F59D F59E F59F
	06	G12A G16A G16B
		G18A G18B G19A
		G19B G33Z G38A
		G38B G38C
	07	H06Z H33Z
	08	I08B I28A I28B
		I28C
	10	K09A K09B
	11	L09A L09B L33Z
	15	P02A P02B P02C
	21B	X04Z X05Z X06A
		X06B X06C X07A
		X07B
39.57.30↔		BORP MBOR VAC
		VAC I VAC II VBOR
	04	E36A E36B
	05	F01A F01C F04Z
		F06A F06B F28A
		F59A F59B F59C

PROC

PROC

CHOP	MDC	DRG
		F59D F59E F59F
	06	G12A G16A G16B
		G18A G18B G19A
		G19B G33Z G38A
		G38B G38C
	07	H06Z H33Z
	08	I08B I28A I28B
		I28C
	10	K09A K09B
	11	L09A L09B L33Z
	15	P02A P02B P02C
	21B	X04Z X05Z X06A
		X06B X06C X07A
		X07B
39.57.31↔		BORP MBOR VAC
		VAC I VAC II VBOR
	04	E36A E36B
	05	F01A F01C F04Z
		F06A F06B F28A
		F59A F59B F59C
		F59D F59E F59F
	06	G12A G16A G16B
		G18A G18B G19A
		G19B G33Z G38A
		G38B G38C
	07	H06Z H33Z
	08	I08B I28A I28B
		I28C
	10	K09A K09B
	11	L09A L09B L33Z
	15	P02A P02B P02C
	21B	X04Z X05Z X06A
		X06B X06C X07A
		X07B
39.57.32↔		BORP MBOR VAC
		VAC I VAC II VBOR
	04	E36A E36B
	05	F01A F01C F04Z
		F06A F06B F28A
		F59A F59B F59C
		F59D F59E F59F
	06	G12A G16A G16B
		G18A G18B G19A
		G19B G33Z G38A
		G38B G38C
	07	H06Z H33Z
	08	I08B I28A I28B
		I28C
	10	K09A K09B
	11	L09A L09B L33Z
	15	P02A P02B P02C
	21B	X04Z X05Z X06A
		X06B X06C X07A
		X07B
39.57.33↔		BORP MBOR VAC
		VAC I VAC II VBOR
	04	E36A E36B
	05	F01A F01C F04Z
		F06A F06B F28A
		F59A F59B F59C
		F59D F59E F59F
	06	G12A G16A G16B
		G18A G18B G19A
		G19B G33Z G38A
		G38B G38C
	07	H06Z H33Z
	08	I08B I28A I28B
		I28C
	10	K09A K09B
	11	L09A L09B L33Z
	15	P02A P02B P02C
	21B	X04Z X05Z X06A
		X06B X06C X07A
		X07B
39.57.39↔		BORP MBOR VAC
		VAC I VAC II VBOR
	04	E36A E36B
	05	F01A F01C F04Z
		F06A F06B F28A
		F59A F59B F59C
		F59D F59E F59F
	06	G12A G16A G16B
		G18A G18B G19A
		G19B G33Z G38A
		G38B G38C
	07	H06Z H33Z
	08	I08B I28A I28B
		I28C
	10	K09A K09B
	11	L09A L09B L33Z
	15	P02A P02B P02C
	21B	X04Z X05Z X06A
		X06B X06C X07A
		X07B
39.57.40↔		BORP MBOR VAC
		VAC I VAC II VBOR
	04	E36A E36B
	05	F01A F01C F04Z
		F06A F06B F28A
		F59A F59B F59C
		F59D F59E F59F
	06	G12A G16A G16B
		G18A G18B G19A
		G19B G33Z G38A
		G38B G38C
	07	H06Z H33Z
	08	I08B I28A I28B
		I28C
	10	K09A K09B
	11	L09A L09B L33Z
	15	P02A P02B P02C
	21B	X04Z X05Z X06A
		X06B X06C X07A
		X07B
39.57.41↔		BORP MBOR VAC
		VAC I VAC II VBOR
	04	E36A E36B
	05	F01A F01C F04Z
		F06A F06B F28A
		F59A F59B F59C
		F59D F59E F59F
	06	G12A G16A G16B
		G18A G18B G19A
		G19B G33Z G38A
		G38B G38C
	07	H06Z H33Z
	08	I08B I28A I28B
		I28C
	10	K09A K09B
	11	L09A L09B L33Z
	15	P02A P02B P02C
	21B	X04Z X05Z X06A
		X06B X06C X07A
		X07B
39.57.42↔		BORP MBOR VAC
		VAC I VAC II VBOR
	04	E36A E36B
	05	F01A F01C F04Z
		F06A F06B F28A
		F59A F59B F59C
		F59D F59E F59F
	06	G12A G16A G16B
		G18A G18B G19A
		G19B G33Z G38A
		G38B G38C
	07	H06Z H33Z
	08	I08B I28A I28B
		I28C
	10	K09A K09B
	11	L09A L09B L33Z
	15	P02A P02B P02C
	21B	X04Z X05Z X06A
		X06B X06C X07A
		X07B
39.57.43↔		BORP MBOR VAC
		VAC I VAC II VBOR
	04	E36A E36B
	05	F01A F01C F04Z
		F06A F06B F28A
		F59A F59B F59C
		F59D F59E F59F
	06	G12A G16A G16B
		G18A G18B G19A
		G19B G38A G38B
		G38C
	07	H06Z H33Z
	08	I08B I28A I28B
		I28C
	10	K09A K09B
	11	L09A L09B L33Z
	15	P02A P02B P02C
	21B	X04Z X05Z X06A
		X06B X06C X07A
		X07B
39.57.44↔		BORP MBOR VAC
		VAC I VAC II VBOR
	04	E36A E36B
	05	F01A F01C F04Z
		F06A F06B F28A
		F59A F59B F59C
		F59D F59E F59F
	06	G12A G16A G16B
		G18A G18B G19A
		G19B G38A G38B
		G38C
	07	H06Z H33Z
	08	I08B I28A I28B
		I28C
	10	K09A K09B
	11	L09A L09B L33Z
	15	P02A P02B P02C
	21B	X04Z X05Z X06A
		X06B X06C X07A
		X07B
39.57.45↔		BORP MBOR VAC
		VAC I VAC II VBOR
	04	E36A E36B
	05	F01A F01C F04Z
		F06A F06B F28A
		F59A F59B F59C
		F59D F59E F59F
	06	G12A G16A G16B
		G18A G18B G19A
		G19B G38A G38B
		G38C
	07	H06Z H33Z
	08	I08B I28A I28B
		I28C
	10	K09A K09B
	11	L09A L09B L33Z

CHOP	MDC	DRG
	15	P02A P02B P02C
	21B	X04Z X05Z X06A X06B X06C X07A X07B
39.57.46↔		BORP MBOR VAC VAC I VAC II VBOR
	04	E36A E36B
	05	F01A F01C F04Z F06A F06B F28A F59A F59B F59C F59D F59E F59F
	06	G12A G16A G16B G18A G18B G19A G19B G38A G38B G38C
	07	H06Z H33Z
	08	I08B I28A I28B I28C
	10	K09A K09B
	11	L09A L09B L33Z
	15	P02A P02B P02C
	21B	X04Z X05Z X06A X06B X06C X07A X07B
39.57.47↔		BORP MBOR VAC VAC I VAC II VBOR
	04	E36A E36B
	05	F01A F01C F04Z F06A F06B F28A F59A F59B F59C F59D F59E F59F
	06	G12A G16A G16B G18A G18B G19A G19B G38A G38B G38C
	07	H06Z H33Z
	08	I08B I28A I28B I28C
	10	K09A K09B
	11	L09A L09B L33Z
	15	P02A P02B P02C
	21B	X04Z X05Z X06A X06B X06C X07A X07B
39.57.48↔		BORP MBOR VAC VAC I VAC II VBOR
	04	E36A E36B
	05	F01A F01C F04Z F06A F06B F28A F59A F59B F59C F59D F59E F59F
	06	G12A G16A G16B G18A G18B G19A G19B G38A G38B G38C
	07	H06Z H33Z
	08	I08B I28A I28B I28C
	10	K09A K09B
	11	L09A L09B L33Z
	15	P02A P02B P02C
	21B	X04Z X05Z X06A X06B X06C X07A X07B
39.57.49↔		BORP MBOR VAC VAC I VAC II VBOR
	04	E36A E36B
	05	F01A F01C F04Z F06A F06B F28A F59A F59B F59C F59D F59E F59F
	06	G12A G16A G16B G18A G18B G19A G19B G38A G38B G38C
	07	H06Z H33Z
	08	I08B I28A I28B I28C
	10	K09A K09B
	11	L09A L09B L33Z
	15	P02A P02B P02C
	21B	X04Z X05Z X06A X06B X06C X07A X07B
39.57.50↔		BORP MBOR VAC VAC I VAC II VBOR
	04	E36A E36B
	05	F01A F01C F04Z F06A F06B F28A F59A F59B F59C F59D F59E F59F
	06	G12A G16A G16B G18A G18B G19A G19B G38A G38B G38C
	07	H06Z H33Z
	08	I08B I28A I28B I28C
	10	K09A K09B
	11	L09A L09B L33Z
	15	P02A P02B P02C
	21B	X04Z X05Z X06A X06B X06C X07A X07B
39.57.51↔		BORP MBOR VAC VAC I VAC II VBOR
	04	E36A E36B
	05	F01A F01C F04Z F06A F06B F28A F59A F59B F59C F59D F59E F59F
	06	G12A G16A G16B G18A G18B G19A G19B G38A G38B G38C
	07	H06Z H33Z
	08	I08B I28A I28B I28C
	10	K09A K09B
	11	L09A L09B L33Z
	15	P02A P02B P02C
	21B	X04Z X05Z X06A X06B X06C X07A X07B
39.57.52↔		BORP MBOR VAC VAC I VAC II VBOR
	04	E36A E36B
	05	F01A F01C F04Z F06A F06B F28A F59A F59B F59C F59D F59E F59F
	06	G12A G16A G16B G18A G18B G19A G19B G38A G38B G38C
	07	H06Z H33Z
	08	I08B I28A I28B I28C
	10	K09A K09B
	11	L09A L09B L33Z
	15	P02A P02B P02C
	21B	X04Z X05Z X06A X06B X06C X07A X07B
39.57.59↔		BORP MBOR VAC VAC I VAC II VBOR
	04	E36A E36B
	05	F01A F01C F04Z F06A F06B F28A F59A F59B F59C F59D F59E F59F
	06	G12A G16A G16B G18A G18B G19A G19B G38A G38B G38C
	07	H06Z H33Z
	08	I08B I28A I28B I28C
	10	K09A K09B
	11	L09A L09B L33Z
	15	P02A P02B P02C
	21B	X04Z X05Z X06A X06B X06C X07A X07B
39.57.60↔		BORP MBOR VAC VAC I VAC II VBOR
	04	E36A E36B
	05	F01A F01C F04Z F06A F06B F28A F59A F59B F59C F59D F59E F59F
	06	G12A G16A G16B G18A G18B G19A G19B G38A G38B G38C
	07	H06Z H33Z
	08	I08B I28A I28B I28C
	10	K09A K09B
	11	L09A L09B L33Z
	15	P02A P02B P02C
	21B	X04Z X05Z X06A X06B X06C X07A X07B
39.57.61↔		BORP MBOR VAC VAC I VAC II VBOR
	04	E36A E36B
	05	F01A F01C F04Z F06A F06B F28A F59A F59B F59C F59D F59E F59F
	06	G12A G16A G16B G18A G18B G19A G19B G38A G38B G38C
	07	H06Z H33Z
	08	I08B I28A I28B I28C
	10	K09A K09B
	11	L09A L09B L33Z
	15	P02A P02B P02C
	21B	X04Z X05Z X06A X06B X06C X07A X07B
39.57.62↔		BORP MBOR VAC VAC I VAC II VBOR
	04	E36A E36B
	05	F01A F01C F04Z F06A F06B F28A F59A F59B F59C

PROC

CHOP	MDC	DRG
		F59D F59E F59F
	06	G12A G16A G16B G18A G18B G19A G19B G38A G38B G38C
	07	H06Z H33Z
	08	I08B I28A I28B I28C
	10	K09A K09B
	11	L09A L09B L33Z
	15	P02A P02B P02C
	21B	X04Z X05Z X06A X06B X06C X07A X07B
39.57.63↔		BORP MBOR VAC VAC I VAC II VBOR
	04	E36A E36B
	05	F01A F01C F04Z F06A F06B F28A F59A F59B F59C F59D F59E F59F
	06	G12A G16A G16B G18A G18B G19A G19B G38A G38B G38C
	07	H06Z H33Z
	08	I08B I28A I28B I28C
	10	K09A K09B
	11	L09A L09B L33Z
	15	P02A P02B P02C
	21B	X04Z X05Z X06A X06B X06C X07A X07B
39.57.64↔		BORP MBOR VAC VAC I VAC II VBOR
	04	E36A E36B
	05	F01A F01C F04Z F06A F06B F28A F59A F59B F59C F59D F59E F59F
	06	G12A G16A G16B G18A G18B G19A G19B G38A G38B G38C
	07	H06Z H33Z
	08	I08B I28A I28B I28C
	10	K09A K09B
	11	L09A L09B L33Z
	15	P02A P02B P02C
	21B	X04Z X05Z X06A X06B X06C X07A X07B
39.57.69↔		BORP MBOR VAC VAC I VAC II VBOR
	04	E36A E36B
	05	F01A F01C F04Z F06A F06B F28A F59A F59B F59C F59D F59E F59F
	06	G12A G16A G16B G18A G18B G19A G19B G38A G38B G38C
	07	H06Z H33Z
	08	I08B I28A I28B I28C
	10	K09A K09B
	11	L09A L09B L33Z
	15	P02A P02B P02C
	21B	X04Z X05Z X06A X06B X06C X07A X07B
39.57.99↔		BORP MBOR VAC VAC I VAC II VBOR
	04	E36A E36B
	05	F01A F01C F04Z F06A F06B F28A F59A F59B F59C F59D F59E F59F
	06	G12A G16A G16B G18A G18B G19A G19B G38A G38B G38C
	07	H06Z H33Z
	08	I08B I28A I28B I28C
	10	K09A K09B
	11	L09A L09B L33Z
	15	P02A P02B P02C
	21B	X04Z X05Z X06A X06B X06C X07A X07B
39.59.30↔	01	B17A B17B
	03	D12A
	04	E02A E02B E02C
	05	F01A F01C F04Z F28A F59A F59B F59C F59D F59E F59F
	06	G12A G12B
	07	H33Z
	08	I08B I28A I28B I28C
	09	J02A J02B J03A J03B J04Z J11A J11B
	10	K09A K09B
	11	L09A L09B L33Z
	21B	X06A X06B X06C X07A X07B
39.59.31↔		BORP MBOR VAC VBOR
	01	B17A B17B
	04	E02A E02B E02C E36A E36B
	05	F01A F01C F04Z F28A F59A F59B F59C F59D F59E F59F
	06	G12A G12B G16A G38A G38B
	07	H33Z
	08	I08B I28A I28B I28C
	09	J02A J02B J03A J03B J04Z J11A J11B
	10	K09A K09B
	11	L09A L09B L33Z
	21B	X06A X06B X06C X07A X07B
39.59.32↔		BORP MBOR VAC VBOR
	01	B01A B01B B04A B04B B04C B17A B17B
	03	D12A
	04	E02A E02B E02C E36A E36B
	05	F01A F01C F04Z F28A F59A F59B F59C F59D F59E F59F
	06	G12A G12B G16A G38A G38B
	07	H33Z
	08	I08B I28A I28B I28C
	09	J02A J02B J03A J03B J04Z J11A J11B
	10	K09A K09B
	11	L09A L09B L33Z
	21B	X06A X06B X06C X07A X07B
39.59.33↔		BORP MBOR VAC VBOR
	01	B01A B01B B04A B04B B04C B17A B17B
	03	D12A
	04	E02A E02B E02C E36A E36B
	05	F01A F01C F04Z F28A F59A F59B F59C F59D F59E F59F
	06	G12A G12B G16A G38A G38B
	07	H33Z
	08	I08B I28A I28B I28C
	09	J02A J02B J03A J03B J04Z J11A J11B
	10	K09A K09B
	11	L09A L09B L33Z
	21B	X06A X06B X06C X07A X07B
39.59.34↔		BORP MBOR VAC VBOR
	01	B01A B01B B04A B04B B04C B17A B17B
	03	D12A
	04	E02A E02B E02C E36A E36B
	05	F01A F01C F04Z F28A F59A F59B F59C F59D F59E F59F
	06	G12A G12B G16A G38A G38B
	07	H33Z
	08	I08B I28A I28B I28C
	09	J02A J02B J03A J03B J04Z J11A J11B
	10	K09A K09B
	11	L09A L09B L33Z
	21B	X06A X06B X06C X07A X07B
39.59.39↔		BORP MBOR VAC VBOR
	01	B01A B01B B04A B04B B04C B17A B17B

CHOP	MDC	DRG
	03	D12A
	04	E02A E02B E02C E36A E36B
	05	F01A F01C F04Z F28A F59A F59B F59C F59D F59E F59F
	06	G12A G12B G16A G38A G38B
	07	H33Z
	08	I08B I28A I28B I28C
	09	J02A J02B J03A J03B J04Z J11A J11B
	10	K09A K09B
	11	L09A L09B L33Z
	21B	X06A X06B X06C X07A X07B
39.59.40↔		BORP MBOR VAC VBOR
	01	B17A B17B
	04	E02A E02B E02C E36A E36B
	05	F01A F01C F04Z F28A F59A F59B F59C F59D F59E F59F
	06	G12A G12B G16A G38A G38B
	07	H33Z
	08	I08B I28A I28B I28C
	09	J02A J02B J03A J03B J04Z J11A J11B
	10	K09A K09B
	11	L09A L09B L33Z
	21B	X06A X06B X06C X07A X07B
39.59.41↔		BORP MBOR VAC VBOR
	01	B17A B17B
	04	E02A E02B E02C E36A E36B
	05	F01A F01C F04Z F28A F59A F59B F59C F59D F59E F59F
	06	G12A G12B G16A G38A G38B
	07	H33Z
	08	I08B I28A I28B I28C
	09	J02A J02B J03A J03B J04Z J11A J11B
	10	K09A K09B
	11	L09A L09B L33Z
	21B	X06A X06B X06C X07A X07B
39.59.42↔		BORP MBOR VAC VBOR
	01	B17A B17B
	04	E02A E02B E02C E36A E36B
	05	F01A F01C F04Z F28A F59A F59B F59C F59D F59E F59F
	06	G12A G12B G16A G38A G38B
	07	H33Z
	08	I08B I28A I28B I28C
	09	J02A J02B J03A J03B J04Z J11A J11B
	10	K09A K09B
	11	L09A L09B L33Z
	21B	X06A X06B X06C X07A X07B
39.59.48↔		BORP MBOR VAC VBOR
	01	B17A B17B
	04	E02A E02B E02C E36A E36B
	05	F01A F01C F04Z F28A F59A F59B F59C F59D F59E F59F
	06	G12A G12B G16A G38A G38B
	07	H33Z
	08	I08B I28A I28B I28C
	09	J02A J02B J03A J03B J04Z J11A J11B
	10	K09A K09B
	11	L09A L09B L33Z
	21B	X06A X06B X06C X07A X07B
39.59.49↔		BORP MBOR VAC VBOR
	01	B17A B17B
	04	E02A E02B E02C E36A E36B
	05	F01A F01C F04Z F28A F59A F59B F59C F59D F59E F59F
	06	G12A G12B G16A G38A G38B
	07	H33Z
	08	I08B I28A I28B I28C
	09	J02A J02B J03A J03B J04Z J11A J11B
	10	K09A K09B
	11	L09A L09B L33Z
	21B	X06A X06B X06C X07A X07B
39.59.50↔		BORP MBOR VAC VBOR
	01	B17A B17B
	04	E02A E02B E02C E36A E36B
	05	F01A F01C F04Z F28A F59A F59B F59C F59D F59E F59F
	06	G12A G12B G16A G38A G38B
	07	H33Z
	08	I08B I28A I28B I28C
	09	J02A J02B J03A J03B J04Z J11A J11B
	10	K09A K09B
	11	L09A L09B L33Z
	21B	X06A X06B X06C X07A X07B
39.59.51↔		BORP MBOR VAC VBOR
	01	B17A B17B
	04	E02A E02B E02C E36A E36B
	05	F01A F01C F04Z F28A F59A F59B F59C F59D F59E F59F
	06	G12A G12B G16A G33Z G38A G38B G38C
	07	H33Z
	08	I08B I28A I28B I28C
	09	J02A J02B J03A J03B J04Z J11A J11B
	10	K09A K09B
	11	L09A L09B L33Z
	21B	X06A X06B X06C X07A X07B
39.59.52↔		BORP MBOR VAC VBOR
	01	B17A B17B
	04	E02A E02B E02C E36A E36B
	05	F01A F01C F04Z F28A F59A F59B F59C F59D F59E F59F
	06	G12A G12B G16A G33Z G38A G38B G38C
	07	H33Z
	08	I08B I28A I28B I28C
	09	J02A J02B J03A J03B J04Z J11A J11B
	10	K09A K09B
	11	L09A L09B L33Z
	21B	X06A X06B X06C X07A X07B
39.59.53↔		BORP MBOR VAC VBOR
	01	B17A B17B
	04	E02A E02B E02C E36A E36B
	05	F01A F01C F04Z F28A F59A F59B F59C F59D F59E F59F
	06	G12A G12B G16A G33Z G38A G38B G38C
	07	H33Z
	08	I08B I28A I28B I28C
	09	J02A J02B J03A J03B J04Z J11A J11B
	10	K09A K09B
	11	L09A L09B L33Z
	21B	X06A X06B X06C

PROC

PROC

CHOP	MDC	DRG
		X07A X07B
39.59.54↔		BORP MBOR VAC VBOR
	01	B17A B17B
	04	E02A E02B E02C E36A E36B
	05	F01A F01C F04Z F28A F59A F59B F59C F59D F59E F59F
	06	G12A G12B G16A G33Z G38A G38B G38C
	07	H33Z
	08	I08B I28A I28B I28C
	09	J02A J02B J03A J03B J04Z J11A J11B
	10	K09A K09B
	11	L09A L09B L33Z
	21B	X06A X06B X06C X07A X07B
39.59.55↔		BORP MBOR VAC VBOR
	01	B17A B17B
	04	E02A E02B E02C E36A E36B
	05	F01A F01C F04Z F28A F59A F59B F59C F59D F59E F59F
	06	G12A G12B G16A G33Z G38A G38B G38C
	07	H33Z
	08	I08B I28A I28B I28C
	09	J02A J02B J03A J03B J04Z J11A J11B
	10	K09A K09B
	11	L09A L09B L33Z
	21B	X06A X06B X06C X07A X07B
39.59.59↔		BORP MBOR VAC VBOR
	01	B17A B17B
	04	E02A E02B E02C E36A E36B
	05	F01A F01C F04Z F28A F59A F59B F59C F59D F59E F59F
	06	G12A G12B G16A G38A G38B
	07	H33Z
	08	I08B I28A I28B I28C
	09	J02A J02B J03A J03B J04Z J11A J11B
	10	K09A K09B
	11	L09A L09B L33Z
	21B	X06A X06B X06C X07A X07B
39.59.60↔		BORP MBOR VAC VBOR
	01	B17A B17B
	04	E02A E02B E02C E36A E36B
	05	F01A F01C F04Z F28A F59A F59B F59C F59D F59E F59F
	06	G12A G12B G16A G38A G38B
	07	H33Z
	08	I08B I28A I28B I28C
	09	J02A J02B J03A J03B J04Z J11A J11B
	10	K09A K09B
	11	L09A L09B L33Z
	21B	X06A X06B X06C X07A X07B
39.59.61↔		BORP MBOR VAC VBOR
	01	B17A B17B
	04	E02A E02B E02C E36A E36B
	05	F01A F01C F04Z F28A F59A F59B F59C F59D F59E F59F
	06	G12A G12B G16A G33Z G38A G38B G38C
	07	H33Z
	08	I08B I28A I28B I28C
	09	J02A J02B J03A J03B J04Z J11A J11B
	10	K09A K09B
	11	L09A L09B L33Z
	21B	X06A X06B X06C X07A X07B
39.59.62↔		BORP MBOR VAC VBOR
	01	B17A B17B
	04	E02A E02B E02C E36A E36B
	05	F01A F01C F04Z F28A F59A F59B F59C F59D F59E F59F
	06	G12A G12B G16A G33Z G38A G38B G38C
	07	H33Z
	08	I08B I28A I28B I28C
	09	J02A J02B J03A J03B J04Z J11A J11B
	10	K09A K09B
	11	L09A L09B L33Z
	21B	X06A X06B X06C X07A X07B
39.59.63↔		BORP MBOR VAC VBOR
	01	B17A B17B
	04	E02A E02B E02C E36A E36B
	05	F01A F01C F04Z F28A F59A F59B F59C F59D F59E F59F
	06	G12A G12B G16A G38A G38B
	07	H33Z
	08	I08B I28A I28B I28C
	09	J02A J02B J03A J03B J04Z J11A J11B
	10	K09A K09B
	11	L09A L09B L33Z
	21B	X06A X06B X06C X07A X07B
39.59.64↔		BORP MBOR VAC VBOR
	01	B17A B17B
	04	E02A E02B E02C E36A E36B
	05	F01A F01C F04Z F28A F59A F59B F59C F59D F59E F59F
	06	G12A G12B G16A G38A G38B
	07	H33Z
	08	I08B I28A I28B I28C
	09	J02A J02B J03A J03B J04Z J11A J11B
	10	K09A K09B
	11	L09A L09B L33Z
	21B	X06A X06B X06C X07A X07B
39.59.65↔		BORP MBOR VAC VBOR
	01	B17A B17B
	04	E02A E02B E02C E36A E36B
	05	F01A F01C F04Z F28A F59A F59B F59C F59D F59E F59F
	06	G12A G12B G16A G38A G38B
	07	H33Z
	08	I08B I28A I28B I28C
	09	J02A J02B J03A J03B J04Z J11A J11B
	10	K09A K09B
	11	L09A L09B L33Z
	21B	X06A X06B X06C X07A X07B
39.59.66↔		BORP MBOR VAC VBOR
	01	B17A B17B
	04	E02A E02B E02C E36A E36B
	05	F01A F01C F04Z F28A F59A F59B F59C F59D F59E F59F
	06	G12A G12B G16A G38A G38B
	07	H33Z
	08	I08B I28A I28B I28C
	09	J02A J02B J03A J03B J04Z J11A

CHOP	MDC	DRG
		J11B
	10	K09A K09B
	11	L09A L09B L33Z
	21B	X06A X06B X06C X07A X07B
39.59.67↔		BORP MBOR VAC VBOR
	01	B17A B17B
	04	E02A E02B E02C E36A E36B
	05	F01A F01C F04Z F28A F59A F59B F59C F59D F59E F59F
	06	G12A G12B G16A G38A G38B
	07	H33Z
	08	I08B I28A I28B I28C
	09	J02A J02B J03A J03B J04Z J11A J11B
	10	K09A K09B
	11	L09A L09B L33Z
	21B	X06A X06B X06C X07A X07B
39.59.68↔		BORP MBOR VAC VBOR
	01	B17A B17B
	04	E02A E02B E02C E36A E36B
	05	F01A F01C F04Z F28A F59A F59B F59C F59D F59E F59F
	06	G12A G12B G16A G38A G38B
	07	H33Z
	08	I08B I28A I28B I28C
	09	J02A J02B J03A J03B J04Z J11A J11B
	10	K09A K09B
	11	L09A L09B L33Z
	21B	X06A X06B X06C X07A X07B
39.59.69↔		BORP MBOR VAC VBOR
	01	B17A B17B
	04	E02A E02B E02C E36A E36B
	05	F01A F01C F04Z F28A F59A F59B F59C F59D F59E F59F
	06	G12A G12B G16A G38A G38B
	07	H33Z
	08	I08B I28A I28B I28C
	09	J02A J02B J03A J03B J04Z J11A J11B
	10	K09A K09B
	11	L09A L09B L33Z
	21B	X06A X06B X06C X07A X07B
39.59.70↔		BORP MBOR VAC VBOR
	01	B17A B17B
	04	E02A E02B E02C E36A E36B
	05	F01A F01C F04Z F28A F59A F59B F59C F59D F59E F59F
	06	G12A G12B G16A G38A G38B
	07	H33Z
	08	I08B I28A I28B I28C
	09	J02A J02B J03A J03B J04Z J11A J11B
	10	K09A K09B
	11	L09A L09B L33Z
	21B	X06A X06B X06C X07A X07B
39.59.71↔		BORP MBOR VAC VBOR
	01	B17A B17B
	04	E02A E02B E02C E36A E36B
	05	F01A F01C F04Z F28A F59A F59B F59C F59D F59E F59F
	06	G12A G12B G16A G33Z G38A G38B G38C
	07	H33Z
	08	I08B I28A I28B I28C
	09	J02A J02B J03A J03B J04Z J11A J11B
	10	K09A K09B
	11	L09A L09B L33Z
	21B	X06A X06B X06C X07A X07B
39.59.72↔		BORP MBOR VAC VBOR
	01	B17A B17B
	04	E02A E02B E02C E36A E36B
	05	F01A F01C F04Z F28A F59A F59B F59C F59D F59E F59F
	06	G12A G12B G16A G38A G38B
	07	H33Z
	08	I08B I28A I28B I28C
	09	J02A J02B J03A J03B J04Z J11A J11B
	10	K09A K09B
	11	L09A L09B L33Z
	21B	X06A X06B X06C X07A X07B
39.59.79↔		BORP MBOR VAC VBOR
	01	B17A B17B
	04	E02A E02B E02C E36A E36B
	05	F01A F01C F04Z F28A F59A F59B F59C F59D F59E F59F
	06	G12A G12B G16A G38A G38B
	07	H33Z
	08	I08B I28A I28B I28C
	09	J02A J02B J03A J03B J04Z J11A J11B
	10	K09A K09B
	11	L09A L09B L33Z
	21B	X06A X06B X06C X07A X07B
39.59.80↔		BORP MBOR VAC VBOR
	01	B17A B17B
	04	E02A E02B E02C E36A E36B
	05	F01A F01C F04Z F28A F59A F59B F59C F59D F59E F59F
	06	G12A G12B G16A G38A G38B
	07	H33Z
	08	I08B I28A I28B I28C
	09	J02A J02B J03A J03B J04Z J11A J11B
	10	K09A K09B
	11	L09A L09B L33Z
	21B	X06A X06B X06C X07A X07B
39.59.81↔		BORP MBOR VAC VBOR
	01	B17A B17B
	04	E02A E02B E02C E36A E36B
	05	F01A F01C F04Z F28A F59A F59B F59C F59D F59E F59F
	06	G12A G12B G16A G38A G38B
	07	H33Z
	08	I08B I28A I28B I28C
	09	J02A J02B J03A J03B J04Z J11A J11B
	10	K09A K09B
	11	L09A L09B L33Z
	21B	X06A X06B X06C X07A X07B
39.59.82↔		BORP MBOR VAC VBOR
	01	B17A B17B
	04	E02A E02B E02C E36A E36B
	05	F01A F01C F04Z F28A F59A F59B F59C F59D F59E F59F
	06	G12A G12B G16A G38A G38B
	07	H33Z
	08	I08B I28A I28B I28C
	09	J02A J02B J03A

PROC

PROC

CHOP	MDC	DRG
		J03B J04Z J11A J11B
	10	K09A K09B
	11	L09A L09B L33Z
	21B	X06A X06B X06C X07A X07B
39.59.83↔		BORP MBOR VAC VBOR
	01	B17A B17B
	04	E02A E02B E02C E36A E36B
	05	F01A F01C F04Z F28A F59A F59B F59C F59D F59E F59F
	06	G12A G12B G16A G38A G38B
	07	H33Z
	08	I08B I28A I28B I28C
	09	J02A J02B J03A J03B J04Z J11A J11B
	10	K09A K09B
	11	L09A L09B L33Z
	21B	X06A X06B X06C X07A X07B
39.59.88↔		BORP MBOR VAC VBOR
	01	B17A B17B
	04	E02A E02B E02C E36A E36B
	05	F01A F01C F04Z F28A F59A F59B F59C F59D F59E F59F
	06	G12A G12B G16A G38A G38B
	07	H33Z
	08	I08B I28A I28B I28C
	09	J02A J02B J03A J03B J04Z J11A J11B
	10	K09A K09B
	11	L09A L09B L33Z
	21B	X06A X06B X06C X07A X07B
39.59.89↔	01	B17A B17B
	04	E02A E02B E02C
	05	F01A F01C F04Z F28A F59A F59B F59C F59D F59E F59F
	06	G12A G12B
	07	H33Z
	08	I08B I28A I28B I28C
	09	J02A J02B J03A J03B J04Z J11A J11B
	10	K09A K09B
	11	L09A L09B L33Z
	21B	X06A X06B X06C X07A X07B
39.59.90↔		BORP MBOR VAC VBOR
	01	B17A B17B
	04	E02A E02B E02C E36A E36B
	05	F01A F01C F04Z F28A F59A F59B F59C F59D F59E F59F
	06	G12A G12B G16A G38A G38B
	07	H33Z
	08	I08B I28A I28B I28C
	09	J02A J02B J03A J03B J04Z J11A J11B
	10	K09A K09B
	11	L09A L09B L33Z
	21B	X06A X06B X06C X07A X07B
39.61.00↔		BORP MBOR VAC VBOR
	04	E05A E36A E36B
	05	F31A F31B F31C F31D F31E F36A F36B F36C F36D F36E
	06	G12A G16A G38A G38B
	07	H33Z
	11	L33Z
39.61.10↔		BORP MBOR VAC VBOR
	04	E05A E36A E36B
	05	F31A F31B F31C F31D F31E F36A F36B F36C F36D F36E
	06	G12A G16A G38A G38B
	07	H33Z
	11	L33Z
39.61.11↔		BORP MBOR VAC VBOR
	04	E05A E36A E36B
	05	F31A F31B F31C F31D F31E F36A F36B F36C F36D F36E
	06	G12A G16A G38A G38B
	07	H33Z
	11	L33Z
39.61.12↔		BORP MBOR VAC VBOR
	04	E05A E36A E36B
	05	F31A F31B F31C F31D F31E F36A F36B F36C F36D F36E
	06	G12A G16A G38A G38B
	07	H33Z
	11	L33Z
39.61.13↔		BORP MBOR VAC VBOR
	04	E05A E36A E36B
	05	F03B F03C F31A F31B F31C F31D F31E F36A F36B F36C F36D F36E
	06	G12A G16A G38A G38B
	07	H33Z
	11	L33Z
39.61.14↔		BORP MBOR VAC VBOR
	04	E05A E36A E36B
	05	F03B F03C F31A F31B F31C F31D F31E F36A F36B F36C F36D F36E
	06	G12A G16A G38A G38B
	07	H33Z
	11	L33Z
39.61.15↔		BORP MBOR VAC VBOR
	04	E05A E36A E36B
	05	F31A F31B F31C F31D F31E F36A F36B F36C F36D F36E
	06	G12A G16A G38A G38B
	07	H33Z
	11	L33Z
39.61.21↔		BORP MBOR VAC VBOR
	04	E05A E36A E36B
	05	F31A F31B F31C F31D F31E F36A F36B F36C F36D F36E
	06	G12A G16A G38A G38B
	07	H33Z
	11	L33Z
39.61.22↔		BORP MBOR VAC VBOR
	04	E05A E36A E36B
	05	F31A F31B F31C F31D F31E F36A F36B F36C F36D F36E
	06	G12A G16A G38A G38B
	07	H33Z
	11	L33Z
39.61.23↔		BORP MBOR VAC VBOR
	04	E05A E36A E36B
	05	F31A F31B F31C F31D F31E F36A F36B F36C F36D F36E
	06	G12A G16A G38A G38B
	07	H33Z
	11	L33Z
39.61.24↔		BORP MBOR VAC VBOR
	04	E05A E36A E36B
	05	F03B F03C F31A F31B F31C F31D F31E F36A F36B F36C F36D F36E
	06	G12A G16A G38A G38B
	07	H33Z
	11	L33Z
39.61.25↔		BORP MBOR VAC VBOR
	04	E05A E36A E36B

CHOP	MDC	DRG
	05	F03B F03C F31A F31B F31C F31D F31E F36A F36B F36C F36D F36E
	06	G12A G16A G38A G38B
	07	H33Z
	11	L33Z
39.61.26↔		BORP MBOR VAC VBOR
	04	E05A E36A E36B
	05	F31A F31B F31C F31D F31E F36A F36B F36C F36D F36E
	06	G12A G16A G38A G38B
	07	H33Z
	11	L33Z
39.61.99↔		BORP MBOR VAC VBOR
	04	E05A E36A E36B
	05	F31A F31B F31C F31D F31E F36A F36B F36C F36D F36E
	06	G12A G16A G38A G38B
	07	H33Z
	11	L33Z
39.66↔		BORP KORP MBOR MKOR VAC VAC I VAC II VBOR VKOR
	04	E05A E36A E36B
	05	F31A F31B F31C F31D F31E F36A F36B F36C F36D F36E
	06	G12A G16A G33Z G38A G38B G38C
	07	H33Z
	11	L33Z
39.71.00↔		BORP KORP MBOR MKOR VAC VAC I VAC II VBOR VKOR
	03	D12A
	04	E02A E02B E36A E36B
	05	F21A F21B F21C F31A F51A F51B F51C F59A F98B
	06	G12A G12B G16A G38A G38B
	07	H06Z
	08	I28A I28B
	09	J11A
	10	K09A K09B
	11	L09A L09B
	12	M06Z M37Z
	13	N11A N11B
	14	O02A O02B
	21B	X06A X06B X06C
39.71.09↔		BORP KORP MBOR MKOR VAC VAC I VAC II VBOR VKOR
	03	D12A
	04	E02A E02B E36A E36B
	05	F21A F21B F21C F31A F51A F51B F51C F59A F98B
	06	G12A G12B G16A G38A G38B
	07	H06Z
	08	I28A I28B
	09	J11A
	10	K09A K09B
	11	L09A L09B
	12	M06Z M37Z
	13	N11A N11B
	14	O02A O02B
	21B	X06A X06B X06C
39.71.21↔		BORP KORP MBOR MKOR VAC VAC I VAC II VBOR VKOR
	03	D12A
	04	E02A E02B E36A E36B
	05	F21A F21B F21C F31A F51A F51B F51C F59A F98B
	06	G12A G12B G16A G38A G38B
	07	H06Z
	08	I28A I28B
	09	J11A
	10	K09A K09B
	11	L09A L09B
	12	M06Z M37Z
	13	N11A N11B
	14	O02A O02B
	21B	X06A X06B X06C
39.71.22↔		BORP KORP MBOR MKOR VAC VAC I VAC II VBOR VKOR
	03	D12A
	04	E02A E02B E36A E36B
	05	F21A F21B F21C F31A F51A F51B F51C F59A F98B
	06	G12A G12B G16A G38A G38B
	07	H06Z
	08	I28A I28B
	09	J11A
	10	K09A K09B
	11	L09A L09B
	12	M06Z M37Z
	13	N11A N11B
	14	O02A O02B
	21B	X06A X06B X06C
39.71.23↔		BORP KORP MBOR MKOR VAC VAC I VAC II VBOR VKOR
	03	D12A
	04	E02A E02B E36A E36B
	05	F21A F21B F21C F31A F51A F51B F51C F59A F98B
	06	G12A G12B G16A G38A G38B
	07	H06Z
	08	I28A I28B
	09	J11A
	10	K09A K09B
	11	L09A L09B
	12	M06Z M37Z
	13	N11A N11B
	14	O02A O02B
	21B	X06A X06B X06C
39.71.24↔		BORP KORP MBOR MKOR VAC VAC I VAC II VBOR VKOR
	03	D12A
	04	E02A E02B E36A E36B
	05	F21A F21B F21C F31A F51A F51B F51C F59A F98B
	06	G12A G12B G16A G38A G38B
	07	H06Z
	08	I28A I28B
	09	J11A
	10	K09A K09B
	11	L09A L09B
	12	M06Z M37Z
	13	N11A N11B
	14	O02A O02B
	21B	X06A X06B X06C
39.71.25↔		BORP KORP MBOR MKOR VAC VAC I VAC II VBOR VKOR
	03	D12A
	04	E02A E02B E36A E36B
	05	F21A F21B F21C F31A F51A F51B F51C F59A F98B
	06	G12A G12B G16A G38A G38B
	07	H06Z
	08	I28A I28B
	09	J11A
	10	K09A K09B
	11	L09A L09B
	12	M06Z M37Z
	13	N11A N11B
	14	O02A O02B
	21B	X06A X06B X06C
39.71.31↔		BORP KORP MBOR MKOR VAC VAC I VAC II VBOR VKOR
	03	D12A
	04	E02A E02B E36A E36B
	05	F21A F21B F21C F31A F51A F51B F51C F59A F98B
	06	G12A G12B G16A G38A G38B
	07	H06Z
	08	I28A I28B
	09	J11A
	10	K09A K09B
	11	L09A L09B
	12	M06Z M37Z
	13	N11A N11B
	14	O02A O02B
	21B	X06A X06B X06C
39.71.32↔		BORP KORP MBOR MKOR VAC VAC I VAC II VBOR VKOR
	03	D12A
	04	E02A E02B E36A E36B
	05	F21A F21B F21C F31A F51A F51B

PROC

CHOP	MDC	DRG
		F51C F59A F98B
	06	G12A G12B G16A G38A G38B
	07	H06Z
	08	I28A I28B
	09	J11A
	10	K09A K09B
	11	L09A L09B
	12	M06Z M37Z
	13	N11A N11B
	14	O02A O02B
	21B	X06A X06B X06C
39.72.09↔		BORP MBOR VAC VBOR
	01	B01A B02A B02B B20A B20B B20C B20D
	02	C14Z
	03	D12A
	04	E02A E02B E36A E36B
	05	F01A F01C F04Z F21A F21B F21C F28A F31A F31B F31C F31D F31E F59A
	06	G12A G12B G16A G38A G38B
	07	H06Z
	08	I28A I28B
	09	J11A
	10	K09A K09B
	11	L09A L09B
	12	M06Z M37Z
	13	N11A N11B
	14	O02A O02B
	21B	X06A X06B X06C
39.72.14↔		BORP KORP MBOR MKOR VAC VBOR VKOR
	01	B01A B01B B02A B02B B20A B20B B20C
	02	C14Z
	03	D12A
	04	E02A E02B E36A E36B
	05	F01A F01C F04Z F21A F21B F21C F28A F31A F31B F31C F31D F31E F59A
	06	G12A G12B G16A G38A G38B
	07	H06Z
	08	I28A I28B
	09	J11A
	10	K09A K09B
	11	L09A L09B
	12	M06Z M37Z
	13	N11A N11B
	14	O02A O02B
	21B	X06A X06B X06C
39.72.15↔		BORP KORP MBOR MKOR VAC VBOR VKOR
	01	B01A B01B B02A B02B B20A B20B B20C
	02	C14Z
	03	D12A
	04	E02A E02B E36A E36B
	05	F01A F01C F04Z F21A F21B F21C F28A F31A F31B F31C F31D F31E F59A
	06	G12A G12B G16A G38A G38B
	07	H06Z
	08	I28A I28B
	09	J11A
	10	K09A K09B
	11	L09A L09B
	12	M06Z M37Z
	13	N11A N11B
	14	O02A O02B
	21B	X06A X06B X06C
39.72.16↔		BORP KORP MBOR MKOR VAC VBOR VKOR
	01	B01A B01B B02A B02B B20A B20B B20C
	02	C14Z
	03	D12A
	04	E02A E02B E36A E36B
	05	F01A F01C F04Z F21A F21B F21C F28A F31A F31B F31C F31D F31E F59A
	06	G12A G12B G16A G38A G38B
	07	H06Z
	08	I28A I28B
	09	J11A
	10	K09A K09B
	11	L09A L09B
	12	M06Z M37Z
	13	N11A N11B
	14	O02A O02B
	21B	X06A X06B X06C
39.72.17↔		BORP KORP MBOR MKOR VAC VBOR VKOR
	01	B01A B01B B02A B02B B20A B20B B20C
	02	C14Z
	03	D12A
	04	E02A E02B E36A E36B
	05	F01A F01C F04Z F21A F21B F21C F28A F31A F31B F31C F31D F31E F59A
	06	G12A G12B G16A G38A G38B
	07	H06Z
	08	I28A I28B
	09	J11A
	10	K09A K09B
	11	L09A L09B
	12	M06Z M37Z
	13	N11A N11B
	14	O02A O02B
	21B	X06A X06B X06C
39.72.18↔		BORP KORP MBOR MKOR VAC VBOR VKOR
	01	B01A B01B B02A B02B B20A B20B B20C
	02	C14Z
	03	D12A
	04	E02A E02B E36A E36B
	05	F01A F01C F04Z F21A F21B F21C F28A F31A F31B F31C F31D F31E F59A
	06	G12A G12B G16A G38A G38B
	07	H06Z
	08	I28A I28B
	09	J11A
	10	K09A K09B
	11	L09A L09B
	12	M06Z M37Z
	13	N11A N11B
	14	O02A O02B
	21B	X06A X06B X06C
39.72.19↔		BORP KORP MBOR MKOR VAC VBOR VKOR
	01	B01A B01B B02A B02B B20A B20B B20C
	02	C14Z
	03	D12A
	04	E02A E02B E36A E36B
	05	F01A F01C F04Z F21A F21B F21C F28A F31A F31B F31C F31D F31E F59A
	06	G12A G12B G16A G38A G38B
	07	H06Z
	08	I28A I28B
	09	J11A
	10	K09A K09B
	11	L09A L09B
	12	M06Z M37Z
	13	N11A N11B
	14	O02A O02B
	21B	X06A X06B X06C
39.72.1A↔		BORP KORP MBOR MKOR VAC VBOR VKOR
	01	B01A B01B B02A B02B B20A B20B B20C
	02	C14Z
	03	D12A
	04	E02A E02B E36A E36B
	05	F01A F01C F04Z F21A F21B F21C F28A F31A F31B F31C F31D F31E F59A
	06	G12A G12B G16A G38A G38B

CHOP	MDC	DRG
	07	H06Z
	08	I28A I28B
	09	J11A
	10	K09A K09B
	11	L09A L09B
	12	M06Z M37Z
	13	N11A N11B
	14	O02A O02B
	21B	X06A X06B X06C
39.72.1B↔		BORP KORP MBOR MKOR VAC VBOR VKOR
	01	B01A B01B B02A B02B B20A B20B B20C
	02	C14Z
	03	D12A
	04	E02A E02B E36A E36B
	05	F01A F01C F04Z F21A F21B F21C F28A F31A F31B F31C F31D F31E F59A
	06	G12A G12B G16A G38A G38B
	07	H06Z
	08	I28A I28B
	09	J11A
	10	K09A K09B
	11	L09A L09B
	12	M06Z M37Z
	13	N11A N11B
	14	O02A O02B
	21B	X06A X06B X06C
39.72.24↔		BORP KORP MBOR MKOR VAC VBOR VKOR
	01	B01A B01B B02A B02B B04A B04B B04C B20A B20B B20C B20D
	02	C14Z
	03	D12A
	04	E02A E02B E36A E36B
	05	F01A F01C F04Z F21A F21B F21C F28A F31A F31B F31C F31D F31E F59A
	06	G12A G12B G16A G38A G38B
	07	H06Z
	08	I28A I28B
	09	J11A
	10	K09A K09B
	11	L09A L09B
	12	M06Z M37Z
	13	N11A N11B
	14	O02A O02B
	21B	X06A X06B X06C
39.72.25↔		BORP KORP MBOR MKOR VAC VBOR VKOR
	01	B01A B01B B02A B02B B04A B04B B04C B20A B20B B20C B20D
	02	C14Z
	03	D12A
	04	E02A E02B E36A E36B
	05	F01A F01C F04Z F21A F21B F21C F28A F31A F31B F31C F31D F31E F59A
	06	G12A G12B G16A G38A G38B
	07	H06Z
	08	I28A I28B
	09	J11A
	10	K09A K09B
	11	L09A L09B
	12	M06Z M37Z
	13	N11A N11B
	14	O02A O02B
	21B	X06A X06B X06C
39.72.26↔		BORP KORP MBOR MKOR VAC VBOR VKOR
	01	B01A B01B B02A B02B B04A B04B B04C B20A B20B B20C B20D
	02	C14Z
	03	D12A
	04	E02A E02B E36A E36B
	05	F01A F01C F04Z F21A F21B F21C F28A F31A F31B F31C F31D F31E F59A
	06	G12A G12B G16A G38A G38B
	07	H06Z
	08	I28A I28B
	09	J11A
	10	K09A K09B
	11	L09A L09B
	12	M06Z M37Z
	13	N11A N11B
	14	O02A O02B
	21B	X06A X06B X06C
39.72.27↔		BORP KORP MBOR MKOR VAC VBOR VKOR
	01	B01A B01B B02A B02B B04A B04B B04C B20A B20B B20C B20D
	02	C14Z
	03	D12A
	04	E02A E02B E36A E36B
	05	F01A F01C F04Z F21A F21B F21C F28A F31A F31B F31C F31D F31E F59A
	06	G12A G12B G16A G38A G38B
	07	H06Z
	08	I28A I28B
	09	J11A
	10	K09A K09B
	11	L09A L09B
	12	M06Z M37Z
	13	N11A N11B
	14	O02A O02B
	21B	X06A X06B X06C
39.72.28↔		BORP KORP MBOR MKOR VAC VBOR VKOR
	01	B01A B01B B02A B02B B04A B04B B04C B20A B20B B20C B20D
	02	C14Z
	03	D12A
	04	E02A E02B E36A E36B
	05	F01A F01C F04Z F21A F21B F21C F28A F31A F31B F31C F31D F31E F59A
	06	G12A G12B G16A G38A G38B
	07	H06Z
	08	I28A I28B
	09	J11A
	10	K09A K09B
	11	L09A L09B
	12	M06Z M37Z
	13	N11A N11B
	14	O02A O02B
	21B	X06A X06B X06C
39.72.29↔		BORP KORP MBOR MKOR VAC VBOR VKOR
	01	B01A B01B B02A B02B B04A B04B B04C B20A B20B B20C B20D
	02	C14Z
	03	D12A
	04	E02A E02B E36A E36B
	05	F01A F01C F04Z F21A F21B F21C F28A F31A F31B F31C F31D F31E F59A
	06	G12A G12B G16A G38A G38B
	07	H06Z
	08	I28A I28B
	09	J11A
	10	K09A K09B
	11	L09A L09B
	12	M06Z M37Z
	13	N11A N11B
	14	O02A O02B
	21B	X06A X06B X06C
39.72.2A↔		BORP KORP MBOR MKOR VAC VBOR VKOR
	01	B01A B01B B02A B02B B04A B04B B04C B20A B20B B20C B20D
	02	C14Z
	03	D12A
	04	E02A E02B E36A E36B
	05	F01A F01C F04Z F21A F21B F21C

PROC

PROC

CHOP	MDC	DRG
		F28A F31A F31B F31C F31D F31E F59A
	06	G12A G12B G16A G38A G38B
	07	H06Z
	08	I28A I28B
	09	J11A
	10	K09A K09B
	11	L09A L09B
	12	M06Z M37Z
	13	N11A N11B
	14	O02A O02B
	21B	X06A X06B X06C
39.72.2B↔		BORP KORP MBOR MKOR VAC VBOR VKOR
	01	B01A B01B B02A B02B B04A B04B B04C B20A B20B B20C B20D
	02	C14Z
	03	D12A
	04	E02A E02B E36A E36B
	05	F01A F01C F04Z F21A F21B F21C F28A F31A F31B F31C F31D F31E F59A
	06	G12A G12B G16A G38A G38B
	07	H06Z
	08	I28A I28B
	09	J11A
	10	K09A K09B
	11	L09A L09B
	12	M06Z M37Z
	13	N11A N11B
	14	O02A O02B
	21B	X06A X06B X06C
39.73.00↔		BORP KORP MBOR MKOR VAC VAC I VAC II VBOR VKOR
	03	D12A
	04	E02A E02B E36A E36B
	05	F04Z F13A F21A F21B F21C F31A F51A F51B F59A F98B
	06	G12A G12B G16A G38A G38B
	07	H06Z
	08	I28A I28B
	09	J11A
	10	K09A K09B
	11	L09A L09B
	12	M06Z M37Z
	13	N11A N11B
	14	O02A O02B
	21B	X06A X06B X06C X07A X07B
	Prä	A06A A06B A06C A07A
39.73.09↔		BORP KORP MBOR MKOR VAC VAC I VAC II VBOR VKOR
	03	D12A
	04	E02A E02B E36A E36B
	05	F04Z F13A F21A F21B F21C F31A F51A F51B F59A F98B
	06	G12A G12B G16A G38A G38B
	07	H06Z
	08	I28A I28B
	09	J11A
	10	K09A K09B
	11	L09A L09B
	12	M06Z M37Z
	13	N11A N11B
	14	O02A O02B
	21B	X06A X06B X06C X07A X07B
	Prä	A06A A06B A06C A07A
39.73.31↔		BORP KORP MBOR MKOR VAC VAC I VAC II VBOR VKOR
	03	D12A
	04	E02A E02B E36A E36B
	05	F04Z F13A F21A F21B F21C F31A F51A F51B F59A F98B
	06	G12A G12B G16A G38A G38B
	07	H06Z
	08	I28A I28B
	09	J11A
	10	K09A K09B
	11	L09A L09B
	12	M06Z M37Z
	13	N11A N11B
	14	O02A O02B
	21B	X06A X06B X06C X07A X07B
	Prä	A06A A06B A06C A07A
39.73.32↔		BORP KORP MBOR MKOR VAC VAC I VAC II VBOR VKOR
	03	D12A
	04	E02A E02B E36A E36B
	05	F04Z F13A F21A F21B F21C F31A F51A F51B F59A F98B
	06	G12A G12B G16A G38A G38B
	07	H06Z
	08	I28A I28B
	09	J11A
	10	K09A K09B
	11	L09A L09B
	12	M06Z M37Z
	13	N11A N11B
	14	O02A O02B
	21B	X06A X06B X06C X07A X07B
	Prä	A06A A06B A06C A07A
39.73.33↔		BORP KORP MBOR MKOR VAC VAC I VAC II VBOR VKOR
	03	D12A
	04	E02A E02B E36A E36B
	05	F04Z F13A F21A F21B F21C F31A F51A F51B F59A F98B
	06	G12A G12B G16A G38A G38B
	07	H06Z
	08	I28A I28B
	09	J11A
	10	K09A K09B
	11	L09A L09B
	12	M06Z M37Z
	13	N11A N11B
	14	O02A O02B
	21B	X06A X06B X06C X07A X07B
	Prä	A06A A06B A06C A07A
39.73.34↔		BORP KORP MBOR MKOR VAC VAC I VAC II VBOR VKOR
	03	D12A
	04	E02A E02B E36A E36B
	05	F04Z F13A F21A F21B F21C F31A F51A F51B F59A F98B
	06	G12A G12B G16A G38A G38B
	07	H06Z
	08	I28A I28B
	09	J11A
	10	K09A K09B
	11	L09A L09B
	12	M06Z M37Z
	13	N11A N11B
	14	O02A O02B
	21B	X06A X06B X06C X07A X07B
	Prä	A06A A06B A06C A07A
39.73.35↔		BORP KORP MBOR MKOR VAC VAC I VAC II VBOR VKOR
	03	D12A
	04	E02A E02B E36A E36B
	05	F04Z F13A F21A F21B F21C F31A F51A F51B F59A F98B
	06	G12A G12B G16A G38A G38B
	07	H06Z
	08	I28A I28B
	09	J11A
	10	K09A K09B
	11	L09A L09B
	12	M06Z M37Z
	13	N11A N11B
	14	O02A O02B
	21B	X06A X06B X06C X07A X07B
	Prä	A06A A06B A06C A07A
39.73.36↔		BORP KORP MBOR

CHOP	MDC	DRG
		MKOR VAC VAC I
		VAC II VBOR VKOR
	03	D12A
	04	E02A E02B E36A
		E36B
	05	F04Z F13A F21A
		F21B F21C F31A
		F51A F51B F59A
		F98B
	06	G12A G12B G16A
		G38A G38B
	07	H06Z
	08	I28A I28B
	09	J11A
	10	K09A K09B
	11	L09A L09B
	12	M06Z M37Z
	13	N11A N11B
	14	O02A O02B
	21B	X06A X06B X06C
		X07A X07B
	Prä	A06A A06B A06C
		A07A
39.73.37↔		BORP KORP MBOR
		MKOR VAC VAC I
		VAC II VBOR VKOR
	03	D12A
	04	E02A E02B E36A
		E36B
	05	F04Z F13A F21A
		F21B F21C F31A
		F51A F51B F59A
		F98B
	06	G12A G12B G16A
		G38A G38B
	07	H06Z
	08	I28A I28B
	09	J11A
	10	K09A K09B
	11	L09A L09B
	12	M06Z M37Z
	13	N11A N11B
	14	O02A O02B
	21B	X06A X06B X06C
		X07A X07B
	Prä	A06A A06B A06C
		A07A
39.73.41↔		BORP KORP MBOR
		MKOR VAC VAC I
		VAC II VBOR VKOR
	03	D12A
	04	E02A E02B E36A
		E36B
	05	F04Z F13A F21A
		F21B F21C F31A
		F51A F51B F59A
		F98B
	06	G12A G12B G16A
		G38A G38B
	07	H06Z
	08	I28A I28B
	09	J11A
	10	K09A K09B
	11	L09A L09B
	12	M06Z M37Z
	13	N11A N11B
	14	O02A O02B
	21B	X06A X06B X06C
		X07A X07B
	Prä	A06A A06B A06C
		A07A
39.73.42↔		BORP KORP MBOR
		MKOR VAC VAC I
		VAC II VBOR VKOR
	03	D12A
	04	E02A E02B E36A
		E36B
	05	F04Z F13A F21A
		F21B F21C F31A
		F51A F51B F59A
		F98B
	06	G12A G12B G16A
		G38A G38B
	07	H06Z
	08	I28A I28B
	09	J11A
	10	K09A K09B
	11	L09A L09B
	12	M06Z M37Z
	13	N11A N11B
	14	O02A O02B
	21B	X06A X06B X06C
		X07A X07B
	Prä	A06A A06B A06C
		A07A
39.73.43↔		BORP KORP MBOR
		MKOR VAC VAC I
		VAC II VBOR VKOR
	03	D12A
	04	E02A E02B E36A
		E36B
	05	F04Z F13A F21A
		F21B F21C F31A
		F51A F51B F59A
		F98B
	06	G12A G12B G16A
		G38A G38B
	07	H06Z
	08	I28A I28B
	09	J11A
	10	K09A K09B
	11	L09A L09B
	12	M06Z M37Z
	13	N11A N11B
	14	O02A O02B
	21B	X06A X06B X06C
		X07A X07B
	Prä	A06A A06B A06C
		A07A
39.73.44↔		BORP KORP MBOR
		MKOR VAC VAC I
		VAC II VBOR VKOR
	03	D12A
	04	E02A E02B E36A
		E36B
	05	F04Z F13A F21A
		F21B F21C F31A
		F51A F51B F59A
		F98B
	06	G12A G12B G16A
		G38A G38B
	07	H06Z
	08	I28A I28B
	09	J11A
	10	K09A K09B
	11	L09A L09B
	12	M06Z M37Z
	13	N11A N11B
	14	O02A O02B
	21B	X06A X06B X06C
		X07A X07B
	Prä	A06A A06B A06C
		A07A
39.73.45↔		BORP KORP MBOR
		MKOR VAC VAC I
		VAC II VBOR VKOR
	03	D12A
	04	E02A E02B E36A
		E36B
	05	F04Z F13A F21A
		F21B F21C F31A
		F51A F51B F59A
		F98B
	06	G12A G12B G16A
		G38A G38B
	07	H06Z
	08	I28A I28B
	09	J11A
	10	K09A K09B
	11	L09A L09B
	12	M06Z M37Z
	13	N11A N11B
	14	O02A O02B
	21B	X06A X06B X06C
		X07A X07B
	Prä	A06A A06B A06C
		A07A
39.73.46↔		BORP KORP MBOR
		MKOR VAC VAC I
		VAC II VBOR VKOR
	03	D12A
	04	E02A E02B E36A
		E36B
	05	F04Z F13A F21A
		F21B F21C F31A
		F51A F51B F59A
		F98B
	06	G12A G12B G16A
		G38A G38B
	07	H06Z
	08	I28A I28B
	09	J11A
	10	K09A K09B
	11	L09A L09B
	12	M06Z M37Z
	13	N11A N11B
	14	O02A O02B
	21B	X06A X06B X06C
		X07A X07B
	Prä	A06A A06B A06C
		A07A A11A
39.73.47↔		BORP KORP MBOR
		MKOR VAC VAC I
		VAC II VBOR VKOR
	03	D12A
	04	E02A E02B E36A
		E36B
	05	F04Z F13A F21A
		F21B F21C F31A
		F51A F51B F59A
		F98B
	06	G12A G12B G16A
		G38A G38B
	07	H06Z
	08	I28A I28B
	09	J11A
	10	K09A K09B
	11	L09A L09B
	12	M06Z M37Z
	13	N11A N11B

PROC

PROC

CHOP	MDC	DRG
	14	O02A O02B
	21B	X06A X06B X06C
		X07A X07B
	Prä	A06A A06B A06C
		A07A A11A
39.75.01↔	03	D12A
	04	E02A E02B
	05	F01A F01C F04Z
		F21A F21B F21C
		F28A F59A F59B
		F59C F59D F59E
		F59F F59G
	06	G12A G12B
	07	H06Z
	08	I28A I28B
	09	J11A
	10	K09A K09B
	11	L09A L09B
	12	M06Z M37Z
	13	N11A N11B
	14	O02A O02B
	21B	X06A X06B X06C
39.75.10↔	03	D12A
	04	E02A E02B
	05	F01A F01C F04Z
		F21A F21B F21C
		F28A F59A F59B
		F59C F59D F59E
		F59F F59G
	06	G12A G12B
	07	H06Z
	08	I28A I28B
	09	J11A
	10	K09A K09B
	11	L09A L09B
	12	M06Z M37Z
	13	N11A N11B
	14	O02A O02B
	21B	X06A X06B X06C
39.75.11↔	01	B17A B17B
	03	D12A
	04	E02A E02B
	05	F21A F21B F21C
		F59A F59B F59C
		F59D F59E F59F
	06	G12A G12B
	07	H06Z
	08	I28A I28B
	09	J11A
	10	K09A K09B
	11	L09A L09B
	12	M06Z M37Z
	13	N11A N11B
	14	O02A O02B
	21B	X04Z X05Z X06A
		X06B X06C
39.75.12↔	03	D12A
	04	E02A E02B
	05	F01A F01C F04Z
		F21A F21B F21C
		F28A F59A F59B
		F59C F59D F59E
		F59F F59G
	06	G12A G12B
	07	H06Z
	08	I28A I28B
	09	J11A
	10	K09A K09B
	11	L09A L09B
	12	M06Z M37Z
	13	N11A N11B
	14	O02A O02B
	21B	X06A X06B X06C
39.75.13↔	03	D12A
	04	E02A E02B
	05	F01A F01C F04Z
		F21A F21B F21C
		F28A F59A F59B
		F59C F59D F59E
		F59F F59G
	06	G12A G12B
	07	H06Z
	08	I28A I28B
	09	J11A
	10	K09A K09B
	11	L09A L09B
	12	M06Z M37Z
	13	N11A N11B
	14	O02A O02B
	21B	X06A X06B X06C
39.75.14↔	03	D12A
	04	E02A E02B
	05	F01A F01C F04Z
		F21A F21B F21C
		F28A F59A F59B
		F59C F59D F59E
		F59F F59G
	06	G12A G12B
	07	H06Z
	08	I28A I28B
	09	J11A
	10	K09A K09B
	11	L09A L09B
	12	M06Z M37Z
	13	N11A N11B
	14	O02A O02B
	21B	X06A X06B X06C
39.75.15↔	03	D12A
	04	E02A E02B
	05	F01A F01C F04Z
		F21A F21B F21C
		F28A F59A F59B
		F59C F59D F59E
		F59F
	06	G12A G12B
	07	H06Z
	08	I28A I28B
	09	J11A
	10	K09A K09B
	11	L09A L09B
	12	M06Z M37Z
	13	N11A N11B
	14	O02A O02B
	21B	X06A X06B X06C
39.75.16↔	03	D12A
	04	E02A E02B
	05	F01A F01C F04Z
		F21A F21B F21C
		F28A F59A F59B
		F59C F59D F59E
		F59F
	06	G12A G12B
	07	H06Z
	08	I28A I28B
	09	J11A
	10	K09A K09B
	11	L09A L09B
	12	M06Z M37Z
	13	N11A N11B
	14	O02A O02B
	21B	X06A X06B X06C
39.75.20‡↔	01	B60A
	05	F59A F59B F59C
		F59D F59E F59F
39.75.21‡↔	01	B60A
	05	F59A F59B F59C
		F59D F59E F59F
39.75.30↔	01	B01A B01B B04A
		B04B B04C
	03	D12A
	04	E02A E02B
	05	F21A F21B F21C
		F59A
	06	G12A G12B
	07	H06Z
	08	I28A I28B
	09	J11A
	10	K09A K09B
	11	L09A L09B
	12	M06Z M37Z
	13	N11A N11B
	14	O02A O02B
	21B	X06A X06B X06C
39.76.10↔	01	B01A B01B B04A
		B04B B04C
	03	D12A
	04	E02A E02B
	05	F01A F01C F04Z
		F21A F21B F21C
		F28A F59A F59B
		F59C F59D F59E
		F59F
	06	G12A G12B
	07	H06Z
	08	I28A I28B
	09	J11A
	10	K09A K09B
	11	L09A L09B
	12	M06Z M37Z
	13	N11A N11B
	14	O02A O02B
	21B	X06A X06B X06C
39.76.11↔	01	B01A B01B B04A
		B04B B04C
	03	D12A
	04	E02A E02B
	05	F01A F01C F04Z
		F21A F21B F21C
		F28A F59A F59B
		F59C F59D F59E
		F59F
	06	G12A G12B
	07	H06Z
	08	I28A I28B
	09	J11A
	10	K09A K09B
	11	L09A L09B
	12	M06Z M37Z
	13	N11A N11B
	14	O02A O02B
	21B	X06A X06B X06C
39.76.20↔	01	B01A B01B B04A
		B04B B04C
	03	D12A
	04	E02A E02B
	05	F01A F01C F04Z
		F21A F21B F21C
		F28A F59A F59B
		F59C F59D F59E
		F59F

CHOP	MDC	DRG
	06	G12A G12B
	07	H06Z
	08	I28A I28B
	09	J11A
	10	K09A K09B
	11	L09A L09B
	12	M06Z M37Z
	13	N11A N11B
	14	O02A O02B
	21B	X06A X06B X06C
39.76.30↔	01	B01A B01B B04A
		B04B B04C
	03	D12A
	04	E02A E02B
	05	F01A F01C F04Z
		F21A F21B F21C
		F28A F59A F59B
		F59C F59D F59E
		F59F
	06	G12A G12B
	07	H06Z
	08	I28A I28B
	09	J11A
	10	K09A K09B
	11	L09A L09B
	12	M06Z M37Z
	13	N11A N11B
	14	O02A O02B
	21B	X06A X06B X06C
39.76.40↔	01	B01A B01B B04A
		B04B B04C
	03	D12A
	04	E02A E02B
	05	F01A F01C F04Z
		F21A F21B F21C
		F28A F59A F59B
		F59C F59D F59E
		F59F
	06	G12A G12B
	07	H06Z
	08	I28A I28B
	09	J11A
	10	K09A K09B
	11	L09A L09B
	12	M06Z M37Z
	13	N11A N11B
	14	O02A O02B
	21B	X06A X06B X06C
39.76.50↔	01	B01A B01B B04A
		B04B B04C
	03	D12A
	04	E02A E02B
	05	F01A F01C F04Z
		F21A F21B F21C
		F28A F59A F59B
		F59C F59D F59E
		F59F F59G
	06	G12A G12B
	07	H06Z
	08	I28A I28B
	09	J11A
	10	K09A K09B
	11	L09A L09B
	12	M06Z M37Z
	13	N11A N11B
	14	O02A O02B
	21B	X06A X06B X06C
39.76.61↔	01	B01A B01B B04A
		B04B B04C
	03	D12A

CHOP	MDC	DRG
	04	E02A E02B
	05	F21A F21B F21C
		F59A F59B F59C
		F59D F59E F59F
	06	G12A G12B
	07	H06Z
	08	I28A I28B
	09	J11A
	10	K09A K09B
	11	L09A L09B
	12	M06Z M37Z
	13	N11A N11B
	14	O02A O02B
	21B	X06A X06B X06C
39.76.62↔		BORP MBOR VAC
		VBOR
	01	B01A B01B B04A
		B04B B04C
	03	D12A
	04	E02A E02B E36A
		E36B
	05	F01A F01C F04Z
		F21A F21B F21C
		F28A F59A F59B
		F59C F59D F59E
		F59F
	06	G12A G12B G16A
		G38A G38B
	07	H06Z
	08	I28A I28B
	09	J11A
	10	K09A K09B
	11	L09A L09B
	12	M06Z M37Z
	13	N11A N11B
	14	O02A O02B
	21B	X06A X06B X06C
39.76.69↔	01	B01A B01B B04A
		B04B B04C
	03	D12A
	04	E02A E02B
	05	F01A F01C F04Z
		F21A F21B F21C
		F28A F59A F59B
		F59C F59D F59E
		F59F
	06	G12A G12B
	07	H06Z
	08	I28A I28B
	09	J11A
	10	K09A K09B
	11	L09A L09B
	12	M06Z M37Z
	13	N11A N11B
	14	O02A O02B
	21B	X06A X06B X06C
39.76.70↔	01	B01A B01B B04A
		B04B B04C
	03	D12A
	04	E02A E02B
	05	F01A F01C F04Z
		F21A F21B F21C
		F28A F59A F59B
		F59C F59D F59E
		F59F F59G
	06	G12A G12B
	07	H06Z
	08	I28A I28B
	09	J11A
	10	K09A K09B

CHOP	MDC	DRG
	11	L09A L09B
	12	M06Z M37Z
	13	N11A N11B
	14	O02A O02B
	21B	X06A X06B X06C
39.76.99↔	01	B01A B01B B04A
		B04B B04C
	03	D12A
	04	E02A E02B
	05	F01A F01C F04Z
		F21A F21B F21C
		F28A F59A F59B
		F59C F59D F59E
		F59F
	06	G12A G12B
	07	H06Z
	08	I28A I28B
	09	J11A
	10	K09A K09B
	11	L09A L09B
	12	M06Z M37Z
	13	N11A N11B
	14	O02A O02B
	21B	X06A X06B X06C
39.77.00↔	01	B01A B02A B02B
		B20A B20B B20C
		B20D
	05	F01A F01C F04Z
		F28A F59A F59B
		F59C F59D F59E
		F59F
	10	K09A K09B
	21B	X07A X07B
39.77.09↔	01	B01A B02A B02B
		B20A B20B B20C
		B20D
	05	F01A F01C F04Z
		F28A F59A F59B
		F59C F59D F59E
		F59F
	10	K09A K09B
	21B	X07A X07B
39.77.10↔		BORP KORP MBOR
		MKOR VAC VAC I
		VAC II VBOR VKOR
	01	B01A B01B B02A
		B02B B20A B20B
		B20C
	04	E36A E36B
	05	F01A F01C F04Z
		F28A F59A F59B
		F59C F59D F59E
		F59F
	06	G12A G16A G38A
		G38B
	10	K09A K09B
	21B	X07A X07B
39.77.20↔		BORP KORP MBOR
		MKOR VAC VAC I
		VAC II VBOR VKOR
	01	B01A B01B B02A
		B02B B20A B20B
		B20C
	04	E36A E36B
	05	F01A F01C F04Z
		F28A F59A F59B
		F59C F59D F59E
		F59F
	06	G12A G16A G38A
		G38B

PROC

PROC

CHOP	MDC	DRG
	10	K09A K09B
	21B	X07A X07B
39.77.30↔		BORP KORP MBOR MKOR VAC VAC I VAC II VBOR VKOR
	01	B01A B01B B02A B02B B20A B20B B20C
	04	E36A E36B
	05	F01A F01C F04Z F28A F59A F59B F59C F59D F59E F59F
	06	G12A G16A G38A G38B
	10	K09A K09B
	21B	X07A X07B
39.77.40↔		BORP KORP MBOR MKOR VAC VAC I VAC II VBOR VKOR
	01	B01A B01B B02A B02B B20A B20B B20C
	04	E36A E36B
	05	F01A F01C F04Z F28A F59A F59B F59C F59D F59E F59F
	06	G12A G16A G38A G38B
	10	K09A K09B
	21B	X07A X07B
39.77.50↔		BORP MBOR VAC VAC I VAC II VBOR
	01	B01A B20A B20B B20C B20D
	03	D12A
	04	E02A E02B E36A E36B
	05	F01A F01C F04Z F21A F21B F21C F28A F59A F59B F59C F59D F59E F59F
	06	G12A G12B G16A G38A G38B
	07	H06Z
	08	I28A I28B
	09	J11A
	10	K09A K09B
	11	L09A L09B
	12	M06Z M37Z
	13	N11A N11B
	14	O02A O02B
	21B	X06A X06B X06C
39.77.60↔		BORP KORP MBOR MKOR VAC VAC I VAC II VBOR VKOR
	01	B01A B01B B02A B02B B20A B20B B20C
	04	E36A E36B
	05	F01A F01C F04Z F28A F59A F59B F59C F59D F59E F59F
	06	G12A G16A G38A G38B
	10	K09A K09B
	21B	X07A X07B
39.77.61↔		BORP KORP MBOR MKOR VAC VAC I VAC II VBOR VKOR
	01	B01A B01B B02A B02B B20A B20B B20C
	04	E36A E36B
	05	F59A F59B F59C F59D F59E F59F
	06	G12A G16A G38A G38B
	10	K09A K09B
	21B	X07A X07B
39.77.62↔		BORP KORP MBOR MKOR VAC VAC I VAC II VBOR VKOR
	01	B01A B01B B02A B02B B20A B20B B20C
	04	E36A E36B
	05	F01A F01C F04Z F28A F59A F59B F59C F59D F59E F59F
	06	G12A G16A G38A G38B
	10	K09A K09B
	21B	X07A X07B
39.77.69↔		BORP KORP MBOR MKOR VAC VAC I VAC II VBOR VKOR
	01	B01A B01B B02A B02B B20A B20B B20C
	04	E36A E36B
	05	F01A F01C F04Z F28A F59A F59B F59C F59D F59E F59F
	06	G12A G16A G38A G38B
	10	K09A K09B
	21B	X07A X07B
39.77.70↔		BORP KORP MBOR MKOR VAC VAC I VAC II VBOR VKOR
	01	B01A B20A B20B B20C B20D
	03	D12A
	04	E02A E02B E36A E36B
	05	F01A F01C F04Z F21A F21B F21C F28A F59A F59B F59C F59D F59E F59F
	06	G12A G12B G16A G38A G38B
	07	H06Z
	08	I28A I28B
	09	J11A
	10	K09A K09B
	11	L09A L09B
	12	M06Z M37Z
	13	N11A N11B
	14	O02A O02B
	21B	X06A X06B X06C
39.77.80↔		BORP KORP MBOR MKOR VAC VAC I VAC II VBOR VKOR
	01	B01A B01B B02A B02B B20A B20B B20C
	04	E36A E36B
	05	F01A F01C F04Z F28A F59A F59B F59C F59D F59E F59F
	06	G12A G16A G38A G38B
	10	K09A K09B
	21B	X07A X07B
39.79.21↔		BORP KORP MBOR MKOR VAC VAC I VAC II VBOR VKOR
	01	B01A B02A B02B B20A B20B B20C
	03	D12A
	04	E02A E02B E36A E36B
	05	F01A F01C F04Z F21A F21B F21C F28A F31A F31B F31C F31D F31E F59A
	06	G12A G12B G16A G38A G38B
	07	H06Z
	08	I28A I28B
	09	J11A
	10	K09A K09B
	11	L09A L09B
	12	M06Z M37Z
	13	N11A N11B N25A N25B
	14	O02A O02B
	21B	X06A X06B X06C
39.79.22↔		BORP KORP MBOR MKOR VAC VAC I VAC II VBOR VKOR
	01	B01A B02A B02B B20A B20B B20C
	03	D12A
	04	E02A E02B E36A E36B
	05	F01A F01C F04Z F21A F21B F21C F28A F31A F31B F31C F31D F31E F59A
	06	G12A G12B G16A G38A G38B
	07	H06Z
	08	I28A I28B
	09	J11A
	10	K09A K09B
	11	L09A L09B
	12	M06Z M37Z
	13	N11A N11B N25A N25B
	14	O02A O02B
	21B	X06A X06B X06C
39.79.24↔		BORP KORP MBOR MKOR VAC VAC I VAC II VBOR VKOR
	01	B01A B02A B02B B20A B20B B20C
	03	D12A
	04	E02A E02B E36A E36B

CHOP	MDC	DRG
	05	F01A F01C F04Z F21A F21B F21C F28A F31A F31B F31C F31D F31E F59A
	06	G12A G12B G16A G38A G38B
	07	H06Z
	08	I28A I28B
	09	J11A
	10	K09A K09B
	11	L09A L09B
	12	M06Z M37Z
	13	N11A N11B N25A N25B
	14	O02A O02B
	21B	X06A X06B X06C
39.79.25↔		BORP KORP MBOR MKOR VAC VAC I VAC II VBOR VKOR
	01	B01A B02A B02B B20A B20B B20C
	03	D12A
	04	E02A E02B E36A E36B
	05	F01A F01C F04Z F21A F21B F21C F28A F31A F31B F31C F31D F31E F59A
	06	G12A G12B G16A G38A G38B
	07	H06Z
	08	I28A I28B
	09	J11A
	10	K09A K09B
	11	L09A L09B
	12	M06Z M37Z
	13	N11A N11B N25A N25B
	14	O02A O02B
	21B	X06A X06B X06C
39.79.26↔		BORP KORP MBOR MKOR VAC VAC I VAC II VBOR VKOR
	01	B01A B02A B02B B20A B20B B20C
	03	D12A
	04	E02A E02B E36A E36B
	05	F01A F01C F04Z F21A F21B F21C F28A F31A F31B F31C F31D F31E F59A
	06	G12A G12B G16A G38A G38B
	07	H06Z
	08	I28A I28B
	09	J11A
	10	K09A K09B
	11	L09A L09B
	12	M06Z M37Z
	13	N11A N11B N25A N25B
	14	O02A O02B
	21B	X06A X06B X06C
39.79.27↔		BORP KORP MBOR MKOR VAC VAC I VAC II VBOR VKOR
	01	B01A B02A B02B B20A B20B B20C
	03	D12A
	04	E02A E02B E36A E36B
	05	F01A F01C F04Z F21A F21B F21C F28A F31A F31B F31C F31D F31E F59A
	06	G12A G12B G16A G38A G38B
	07	H06Z
	08	I28A I28B
	09	J11A
	10	K09A K09B
	11	L09A L09B
	12	M06Z M37Z
	13	N11A N11B N25A N25B
	14	O02A O02B
	21B	X06A X06B X06C
39.79.28↔		BORP KORP MBOR MKOR VAC VAC I VAC II VBOR VKOR
	01	B01A B01B B02A B02B B04A B04B B04C B20A B20B B20C B20D
	03	D12A
	04	E02A E02B E36A E36B
	05	F01A F01C F04Z F21A F21B F21C F28A F31A F31B F31C F31D F31E F59A
	06	G12A G12B G16A G38A G38B
	07	H06Z
	08	I28A I28B
	09	J11A
	10	K09A K09B
	11	L09A L09B
	12	M06Z M37Z
	13	N11A N11B N25A N25B
	14	O02A O02B
	21B	X06A X06B X06C
39.79.29↔	01	B01A B02A B02B B20A B20B B20C
	03	D12A
	04	E02A E02B
	05	F01A F01C F04Z F21A F21B F21C F28A F31A F31B F31C F31D F31E F59A
	06	G12A G12B
	07	H06Z
	08	I28A I28B
	09	J11A
	10	K09A K09B
	11	L09A L09B
	12	M06Z M37Z
	13	N11A N11B N25A N25B
	14	O02A O02B
	21B	X06A X06B X06C
39.79.41↔		BORP KORP MBOR MKOR VAC VAC I VAC II VBOR VKOR
	01	B01A B02A B02B B20A B20B B20C
	03	D12A
	04	E02A E02B E36A E36B
	05	F01A F01C F04Z F21A F21B F21C F28A F31A F31B F31C F31D F31E F59A
	06	G12A G12B G16A G38A G38B
	07	H06Z
	08	I28A I28B
	09	J11A
	10	K09A K09B
	11	L09A L09B
	12	M06Z M37Z
	13	N11A N11B N25A N25B
	14	O02A O02B
	21B	X06A X06B X06C
39.79.42↔		BORP KORP MBOR MKOR VAC VAC I VAC II VBOR VKOR
	01	B01A B02A B02B B20A B20B B20C
	03	D12A
	04	E02A E02B E36A E36B
	05	F01A F01C F04Z F21A F21B F21C F28A F31A F31B F31C F31D F31E F59A
	06	G12A G12B G16A G38A G38B
	07	H06Z
	08	I28A I28B
	09	J11A
	10	K09A K09B
	11	L09A L09B
	12	M06Z M37Z
	13	N11A N11B N25A N25B
	14	O02A O02B
	21B	X06A X06B X06C
39.79.44↔		BORP KORP MBOR MKOR VAC VAC I VAC II VBOR VKOR
	01	B01A B02A B02B B20A B20B B20C
	03	D12A
	04	E02A E02B E36A E36B
	05	F01A F01C F04Z F21A F21B F21C F28A F31A F31B F31C F31D F31E F59A
	06	G12A G12B G16A G38A G38B
	07	H06Z
	08	I28A I28B
	09	J11A
	10	K09A K09B
	11	L09A L09B
	12	M06Z M37Z

PROC

CHOP	MDC	DRG
	13	N11A N11B N25A N25B
	14	O02A O02B
	21B	X06A X06B X06C
39.79.45↔		BORP KORP MBOR MKOR VAC VAC I VAC II VBOR VKOR
	01	B01A B02A B02B B20A B20B B20C
	03	D12A
	04	E02A E02B E36A E36B
	05	F01A F01C F04Z F21A F21B F21C F28A F31A F31B F31C F31D F31E F59A
	06	G12A G12B G16A G38A G38B
	07	H06Z
	08	I28A I28B
	09	J11A
	10	K09A K09B
	11	L09A L09B
	12	M06Z M37Z
	13	N11A N11B N25A N25B
	14	O02A O02B
	21B	X06A X06B X06C
39.79.46↔		BORP KORP MBOR MKOR VAC VAC I VAC II VBOR VKOR
	01	B01A B02A B02B B20A B20B B20C
	03	D12A
	04	E02A E02B E36A E36B
	05	F01A F01C F04Z F21A F21B F21C F28A F31A F31B F31C F31D F31E F59A
	06	G12A G12B G16A G38A G38B
	07	H06Z
	08	I28A I28B
	09	J11A
	10	K09A K09B
	11	L09A L09B
	12	M06Z M37Z
	13	N11A N11B N25A N25B
	14	O02A O02B
	21B	X06A X06B X06C
39.79.47↔		BORP KORP MBOR MKOR VAC VAC I VAC II VBOR VKOR
	01	B01A B01B B02A B02B B04A B04B B04C B20A B20B B20C B20D
	03	D12A
	04	E02A E02B E36A E36B
	05	F01A F01C F04Z F21A F21B F21C F28A F31A F31B F31C F31D F31E F59A
	06	G12A G12B G16A G38A G38B
	07	H06Z
	08	I28A I28B
	09	J11A
	10	K09A K09B
	11	L09A L09B
	12	M06Z M37Z
	13	N11A N11B N25A N25B
	14	O02A O02B
	21B	X06A X06B X06C
39.79.48↔		BORP KORP MBOR MKOR VAC VAC I VAC II VBOR VKOR
	01	B01A B02A B02B B20A B20B B20C
	03	D12A
	04	E02A E02B E36A E36B
	05	F01A F01C F04Z F21A F21B F21C F28A F31A F31B F31C F31D F31E F59A
	06	G12A G12B G16A G38A G38B
	07	H06Z
	08	I28A I28B
	09	J11A
	10	K09A K09B
	11	L09A L09B
	12	M06Z M37Z
	13	N11A N11B N25A N25B
	14	O02A O02B
	21B	X06A X06B X06C
39.79.49↔		BORP KORP MBOR MKOR VAC VAC I VAC II VBOR VKOR
	01	B01A B02A B02B B20A B20B B20C
	03	D12A
	04	E02A E02B E36A E36B
	05	F01A F01C F04Z F21A F21B F21C F28A F31A F31B F31C F31D F31E F59A
	06	G12A G12B G16A G38A G38B
	07	H06Z
	08	I28A I28B
	09	J11A
	10	K09A K09B
	11	L09A L09B
	12	M06Z M37Z
	13	N11A N11B N25A N25B
	14	O02A O02B
	21B	X06A X06B X06C
39.79.51↔		BORP KORP MBOR MKOR VAC VAC I VAC II VBOR VKOR
	01	B01A B02A B02B B20A B20B B20C
	03	D12A
	04	E02A E02B E36A E36B
	05	F01A F01C F04Z F21A F21B F21C F28A F31A F31B F31C F31D F31E F59A
	06	G12A G12B G16A G38A G38B
	07	H06Z
	08	I28A I28B
	09	J11A
	10	K09A K09B
	11	L09A L09B
	12	M06Z M37Z
	13	N11A N11B N25A N25B
	14	O02A O02B
	21B	X06A X06B X06C
39.79.52↔		BORP KORP MBOR MKOR VAC VAC I VAC II VBOR VKOR
	01	B01A B02A B02B B20A B20B B20C
	03	D12A
	04	E02A E02B E36A E36B
	05	F01A F01C F04Z F21A F21B F21C F28A F31A F31B F31C F31D F31E F59A
	06	G12A G12B G16A G38A G38B
	07	H06Z
	08	I28A I28B
	09	J11A
	10	K09A K09B
	11	L09A L09B
	12	M06Z M37Z
	13	N11A N11B N25A N25B
	14	O02A O02B
	21B	X06A X06B X06C
39.79.54↔		BORP KORP MBOR MKOR VAC VAC I VAC II VBOR VKOR
	01	B01A B02A B02B B20A B20B B20C
	03	D12A
	04	E02A E02B E36A E36B
	05	F01A F01C F04Z F21A F21B F21C F28A F31A F31B F31C F31D F31E F59A
	06	G12A G12B G16A G38A G38B
	07	H06Z
	08	I28A I28B
	09	J11A
	10	K09A K09B
	11	L09A L09B
	12	M06Z M37Z
	13	N11A N11B N25A N25B
	14	O02A O02B
	21B	X06A X06B X06C
39.79.55↔		BORP KORP MBOR MKOR VAC VAC I VAC II VBOR VKOR
	01	B01A B02A B02B

CHOP	MDC	DRG
		B20A B20B B20C
	03	D12A
	04	E02A E02B E36A
		E36B
	05	F01A F01C F04Z
		F21A F21B F21C
		F28A F31A F31B
		F31C F31D F31E
		F59A
	06	G12A G12B G16A
		G38A G38B
	07	H06Z
	08	I28A I28B
	09	J11A
	10	K09A K09B
	11	L09A L09B
	12	M06Z M37Z
	13	N11A N11B N25A
		N25B
	14	O02A O02B
	21B	X06A X06B X06C
39.79.56↔		BORP KORP MBOR
		MKOR VAC VAC I
		VAC II VBOR VKOR
	01	B01A B02A B02B
		B20A B20B B20C
	03	D12A
	04	E02A E02B E36A
		E36B
	05	F01A F01C F04Z
		F21A F21B F21C
		F28A F31A F31B
		F31C F31D F31E
		F59A
	06	G12A G12B G16A
		G38A G38B
	07	H06Z
	08	I28A I28B
	09	J11A
	10	K09A K09B
	11	L09A L09B
	12	M06Z M37Z
	13	N11A N11B N25A
		N25B
	14	O02A O02B
	21B	X06A X06B X06C
39.79.57↔		BORP KORP MBOR
		MKOR VAC VAC I
		VAC II VBOR VKOR
	01	B01A B02A B02B
		B20A B20B B20C
	03	D12A
	04	E02A E02B E36A
		E36B
	05	F01A F01C F04Z
		F21A F21B F21C
		F28A F31A F31B
		F31C F31D F31E
		F59A
	06	G12A G12B G16A
		G38A G38B
	07	H06Z
	08	I28A I28B
	09	J11A
	10	K09A K09B
	11	L09A L09B
	12	M06Z M37Z
	13	N11A N11B N25A
		N25B
	14	O02A O02B

CHOP	MDC	DRG
	21B	X06A X06B X06C
39.79.58↔		BORP KORP MBOR
		MKOR VAC VAC I
		VAC II VBOR VKOR
	01	B01A B01B B02A
		B02B B04A B04B
		B04C B20A B20B
		B20C B20D
	03	D12A
	04	E02A E02B E36A
		E36B
	05	F01A F01C F04Z
		F21A F21B F21C
		F28A F31A F31B
		F31C F31D F31E
		F59A
	06	G12A G12B G16A
		G38A G38B
	07	H06Z
	08	I28A I28B
	09	J11A
	10	K09A K09B
	11	L09A L09B
	12	M06Z M37Z
	13	N11A N11B N25A
		N25B
	14	O02A O02B
	21B	X06A X06B X06C
39.79.59↔	01	B01A B02A B02B
		B20A B20B B20C
	03	D12A
	04	E02A E02B
	05	F01A F01C F04Z
		F21A F21B F21C
		F28A F31A F31B
		F31C F31D F31E
		F59A
	06	G12A G12B
	07	H06Z
	08	I28A I28B
	09	J11A
	10	K09A K09B
	11	L09A L09B
	12	M06Z M37Z
	13	N11A N11B N25A
		N25B
	14	O02A O02B
	21B	X06A X06B X06C
39.79.61↔		BORP KORP MBOR
		MKOR VAC VAC I
		VAC II VBOR VKOR
	01	B01A B02A B02B
		B20A B20B B20C
	03	D12A
	04	E02A E02B E36A
		E36B
	05	F01A F01C F04Z
		F21A F21B F21C
		F28A F31A F31B
		F31C F31D F31E
		F59A
	06	G12A G12B G16A
		G38A G38B
	07	H06Z
	08	I28A I28B
	09	J11A
	10	K09A K09B
	11	L09A L09B
	12	M06Z M37Z
	13	N11A N11B N25A

CHOP	MDC	DRG
		N25B
	14	O02A O02B
	21B	X06A X06B X06C
39.79.62↔		BORP KORP MBOR
		MKOR VAC VAC I
		VAC II VBOR VKOR
	01	B01A B02A B02B
		B20A B20B B20C
	03	D12A
	04	E02A E02B E36A
		E36B
	05	F01A F01C F04Z
		F21A F21B F21C
		F28A F31A F31B
		F31C F31D F31E
		F59A
	06	G12A G12B G16A
		G38A G38B
	07	H06Z
	08	I28A I28B
	09	J11A
	10	K09A K09B
	11	L09A L09B
	12	M06Z M37Z
	13	N11A N11B N25A
		N25B
	14	O02A O02B
	21B	X06A X06B X06C
39.79.64↔		BORP KORP MBOR
		MKOR VAC VAC I
		VAC II VBOR VKOR
	01	B01A B02A B02B
		B20A B20B B20C
	03	D12A
	04	E02A E02B E36A
		E36B
	05	F01A F01C F04Z
		F21A F21B F21C
		F28A F31A F31B
		F31C F31D F31E
		F59A
	06	G12A G12B G16A
		G38A G38B
	07	H06Z
	08	I28A I28B
	09	J11A
	10	K09A K09B
	11	L09A L09B
	12	M06Z M37Z
	13	N11A N11B N25A
		N25B
	14	O02A O02B
	21B	X06A X06B X06C
39.79.65↔		BORP KORP MBOR
		MKOR VAC VAC I
		VAC II VBOR VKOR
	01	B01A B02A B02B
		B20A B20B B20C
	03	D12A
	04	E02A E02B E36A
		E36B
	05	F01A F01C F04Z
		F21A F21B F21C
		F28A F31A F31B
		F31C F31D F31E
		F59A
	06	G12A G12B G16A
		G38A G38B
	07	H06Z
	08	I28A I28B

PROC

PROC

CHOP	MDC	DRG
	09	J11A
	10	K09A K09B
	11	L09A L09B
	12	M06Z M37Z
	13	N11A N11B N25A N25B
	14	O02A O02B
	21B	X06A X06B X06C
39.79.66↔		BORP KORP MBOR MKOR VAC VAC I VAC II VBOR VKOR
	01	B01A B02A B02B B20A B20B B20C
	03	D12A
	04	E02A E02B E36A E36B
	05	F01A F01C F04Z F21A F21B F21C F28A F31A F31B F31C F31D F31E F59A
	06	G12A G12B G16A G38A G38B
	07	H06Z
	08	I28A I28B
	09	J11A
	10	K09A K09B
	11	L09A L09B
	12	M06Z M37Z
	13	N11A N11B N25A N25B
	14	O02A O02B
	21B	X06A X06B X06C
39.79.67↔		BORP KORP MBOR MKOR VAC VAC I VAC II VBOR VKOR
	01	B01A B02A B02B B20A B20B B20C
	03	D12A
	04	E02A E02B E36A E36B
	05	F01A F01C F04Z F21A F21B F21C F28A F31A F31B F31C F31D F31E F59A
	06	G12A G12B G16A G38A G38B
	07	H06Z
	08	I28A I28B
	09	J11A
	10	K09A K09B
	11	L09A L09B
	12	M06Z M37Z
	13	N11A N11B N25A N25B
	14	O02A O02B
	21B	X06A X06B X06C
39.79.68↔		BORP KORP MBOR MKOR VAC VAC I VAC II VBOR VKOR
	01	B01A B01B B02A B02B B04A B04B B04C B20A B20B B20C B20D
	03	D12A
	04	E02A E02B E36A E36B
	05	F01A F01C F04Z F21A F21B F21C F28A F31A F31B F31C F31D F31E F59A
	06	G12A G12B G16A G38A G38B
	07	H06Z
	08	I28A I28B
	09	J11A
	10	K09A K09B
	11	L09A L09B
	12	M06Z M37Z
	13	N11A N11B N25A N25B
	14	O02A O02B
	21B	X06A X06B X06C
39.79.69↔	01	B01A B02A B02B B20A B20B B20C
	03	D12A
	04	E02A E02B
	05	F01A F01C F04Z F21A F21B F21C F28A F31A F31B F31C F31D F31E F59A
	06	G12A G12B
	07	H06Z
	08	I28A I28B
	09	J11A
	10	K09A K09B
	11	L09A L09B
	12	M06Z M37Z
	13	N11A N11B N25A N25B
	14	O02A O02B
	21B	X06A X06B X06C
39.79.71↔		BORP MBOR VAC VBOR
	01	B01A B02A B02B B20A B20B B20C
	03	D12A
	04	E02A E02B E36A E36B
	05	F01A F01C F04Z F21A F21B F21C F28A F59A F59B F59C F59D F59E F59F F59G
	06	G12A G12B G16A G38A G38B
	07	H06Z
	08	I28A I28B
	09	J11A
	10	K09A K09B
	11	L09A L09B
	12	M06Z M37Z
	13	N11A N11B N25A N25B
	14	O02A O02B
	21B	X06A X06B X06C
39.79.72↔		BORP MBOR VAC VBOR
	01	B01A B02A B02B B20A B20B B20C
	03	D12A
	04	E02A E02B E36A E36B
	05	F01A F01C F04Z F21A F21B F21C F28A F31A F31B F31C F31D F31E F59A
	06	G12A G12B G16A G38A G38B
	07	H06Z
	08	I28A I28B
	09	J11A
	10	K09A K09B
	11	L09A L09B
	12	M06Z M37Z
	13	N11A N11B N25A N25B
	14	O02A O02B
	21B	X06A X06B X06C
39.79.74↔		BORP MBOR VAC VBOR
	01	B01A B02A B02B B20A B20B B20C
	03	D12A
	04	E02A E02B E36A E36B
	05	F01A F01C F04Z F21A F21B F21C F28A F31A F31B F31C F31D F31E F59A
	06	G12A G12B G16A G38A G38B
	07	H06Z
	08	I28A I28B
	09	J11A
	10	K09A K09B
	11	L09A L09B
	12	M06Z M37Z
	13	N11A N11B N25A N25B
	14	O02A O02B
	21B	X06A X06B X06C
39.79.75↔		BORP MBOR VAC VBOR
	01	B01A B02A B02B B20A B20B B20C
	03	D12A
	04	E02A E02B E36A E36B
	05	F01A F01C F04Z F21A F21B F21C F28A F59A F59B F59C F59D F59E F59F F59G
	06	G12A G12B G16A G38A G38B
	07	H06Z
	08	I28A I28B
	09	J11A
	10	K09A K09B
	11	L09A L09B
	12	M06Z M37Z
	13	N11A N11B N25A N25B
	14	O02A O02B
	21B	X06A X06B X06C
39.79.76↔		BORP MBOR VAC VBOR
	01	B01A B02A B02B B20A B20B B20C
	03	D12A
	04	E02A E02B E36A E36B
	05	F01A F01C F04Z F21A F21B F21C

CHOP	MDC	DRG
		F28A F59A F59B F59C F59D F59E F59F F59G
	06	G12A G12B G16A G38A G38B
	07	H06Z
	08	I28A I28B
	09	J11A
	10	K09A K09B
	11	L09A L09B
	12	M06Z M37Z
	13	N11A N11B N25A N25B
	14	O02A O02B
	21B	X06A X06B X06C
39.79.77↔		BORP MBOR VAC VBOR
	01	B01A B02A B02B B20A B20B B20C
	03	D12A
	04	E02A E02B E36A E36B
	05	F01A F01C F04Z F21A F21B F21C F28A F59A F59B F59C F59D F59E F59F F59G
	06	G12A G12B G16A G38A G38B
	07	H06Z
	08	I28A I28B
	09	J11A
	10	K09A K09B
	11	L09A L09B
	12	M06Z M37Z
	13	N11A N11B N25A N25B
	14	O02A O02B
	21B	X06A X06B X06C
39.79.79↔		BORP MBOR VAC VBOR
	01	B01A B02A B02B B20A B20B B20C
	03	D12A
	04	E02A E02B E36A E36B
	05	F01A F01C F04Z F21A F21B F21C F28A F59A F59B F59C F59D F59E F59F F59G
	06	G12A G12B G16A G38A G38B
	07	H06Z
	08	I28A I28B
	09	J11A
	10	K09A K09B
	11	L09A L09B
	12	M06Z M37Z
	13	N11A N11B N25A N25B
	14	O02A O02B
	21B	X06A X06B X06C
39.79.81↔		BORP MBOR VAC VBOR
	01	B01A B02A B02B B20A B20B B20C
	03	D12A
	04	E02A E02B E36A E36B
	05	F01A F01C F04Z F21A F21B F21C F28A F59A F59B F59C F59D F59E F59F F59G
	06	G12A G12B G16A G38A G38B
	07	H06Z
	08	I28A I28B
	09	J11A
	10	K09A K09B
	11	L09A L09B
	12	M06Z M37Z
	13	N11A N11B N25A N25B
	14	O02A O02B
	21B	X06A X06B X06C
39.79.82↔		BORP MBOR VAC VBOR
	01	B01A B02A B02B B20A B20B B20C
	03	D12A
	04	E02A E02B E36A E36B
	05	F01A F01C F04Z F21A F21B F21C F28A F31A F31B F31C F31D F31E F59A
	06	G12A G12B G16A G38A G38B
	07	H06Z
	08	I28A I28B
	09	J11A
	10	K09A K09B
	11	L09A L09B
	12	M06Z M37Z
	13	N11A N11B N25A N25B
	14	O02A O02B
	21B	X06A X06B X06C
39.79.84↔		BORP MBOR VAC VBOR
	01	B01A B02A B02B B20A B20B B20C
	03	D12A
	04	E02A E02B E36A E36B
	05	F01A F01C F04Z F21A F21B F21C F28A F31A F31B F31C F31D F31E F59A
	06	G12A G12B G16A G38A G38B
	07	H06Z
	08	I28A I28B
	09	J11A
	10	K09A K09B
	11	L09A L09B
	12	M06Z M37Z
	13	N11A N11B N25A N25B
	14	O02A O02B
	21B	X06A X06B X06C
39.79.85↔		BORP MBOR VAC VBOR
	01	B01A B02A B02B B20A B20B B20C
	03	D12A
	04	E02A E02B E36A E36B
	05	F01A F01C F04Z F21A F21B F21C F28A F59A F59B F59C F59D F59E F59F F59G
	06	G12A G12B G16A G38A G38B
	07	H06Z
	08	I28A I28B
	09	J11A
	10	K09A K09B
	11	L09A L09B
	12	M06Z M37Z
	13	N11A N11B N25A N25B
	14	O02A O02B
	21B	X06A X06B X06C
39.79.86↔		BORP MBOR VAC VBOR
	01	B01A B02A B02B B20A B20B B20C
	03	D12A
	04	E02A E02B E36A E36B
	05	F01A F01C F04Z F21A F21B F21C F28A F59A F59B F59C F59D F59E F59F F59G
	06	G12A G12B G16A G38A G38B
	07	H06Z
	08	I28A I28B
	09	J11A
	10	K09A K09B
	11	L09A L09B
	12	M06Z M37Z
	13	N11A N11B N25A N25B
	14	O02A O02B
	21B	X06A X06B X06C
39.79.87↔		BORP MBOR VAC VBOR
	01	B01A B02A B02B B20A B20B B20C
	03	D12A
	04	E02A E02B E36A E36B
	05	F01A F01C F04Z F21A F21B F21C F28A F59A F59B F59C F59D F59E F59F F59G
	06	G12A G12B G16A G38A G38B
	07	H06Z
	08	I28A I28B
	09	J11A
	10	K09A K09B
	11	L09A L09B
	12	M06Z M37Z
	13	N11A N11B N25A N25B
	14	O02A O02B
	21B	X06A X06B X06C
39.79.89↔		BORP MBOR VAC VBOR
	01	B01A B02A B02B

PROC

PROC

CHOP	MDC	DRG
		B20A B20B B20C
	03	D12A
	04	E02A E02B E36A
		E36B
	05	F01A F01C F04Z
		F21A F21B F21C
		F28A F59A F59B
		F59C F59D F59E
		F59F F59G
	06	G12A G12B G16A
		G38A G38B
	07	H06Z
	08	I28A I28B
	09	J11A
	10	K09A K09B
	11	L09A L09B
	12	M06Z M37Z
	13	N11A N11B N25A
		N25B
	14	O02A O02B
	21B	X06A X06B X06C
39.79.91↔		BORP KORP MBOR
		MKOR VAC VAC I
		VAC II VBOR VKOR
	01	B01A B02A B02B
		B20A B20B B20C
	03	D12A
	04	E02A E02B E36A
		E36B
	05	F21A F21B F21C
		F59A
	06	G12A G12B G16A
		G38A G38B
	07	H06Z
	08	I28A I28B
	09	J11A
	10	K09A K09B
	11	L09A L09B
	12	M06Z M37Z
	13	N11A N11B N25A
		N25B
	14	O02A O02B
	21B	X06A X06B X06C
39.79.92↔		BORP KORP MBOR
		MKOR VAC VAC I
		VAC II VBOR VKOR
	01	B01A B02A B02B
		B20A B20B B20C
	03	D12A
	04	E02A E02B E36A
		E36B
	05	F21A F21B F21C
		F59A
	06	G12A G12B G16A
		G38A G38B
	07	H06Z
	08	I28A I28B
	09	J11A
	10	K09A K09B
	11	L09A L09B
	12	M06Z M37Z
	13	N11A N11B N25A
		N25B
	14	O02A O02B
	21B	X06A X06B X06C
39.79.94↔		BORP KORP MBOR
		MKOR VAC VAC I
		VAC II VBOR VKOR
	01	B01A B02A B02B
		B20A B20B B20C
	03	D12A
	04	E02A E02B E36A
		E36B
	05	F21A F21B F21C
		F59A
	06	G12A G12B G16A
		G38A G38B
	07	H06Z
	08	I28A I28B
	09	J11A
	10	K09A K09B
	11	L09A L09B
	12	M06Z M37Z
	13	N11A N11B N25A
		N25B
	14	O02A O02B
	21B	X06A X06B X06C
39.79.95↔		BORP KORP MBOR
		MKOR VAC VAC I
		VAC II VBOR VKOR
	01	B01A B02A B02B
		B20A B20B B20C
	03	D12A
	04	E02A E02B E36A
		E36B
	05	F21A F21B F21C
		F59A
	06	G12A G12B G16A
		G38A G38B
	07	H06Z
	08	I28A I28B
	09	J11A
	10	K09A K09B
	11	L09A L09B
	12	M06Z M37Z
	13	N11A N11B N25A
		N25B
	14	O02A O02B
	21B	X06A X06B X06C
39.79.96↔		BORP KORP MBOR
		MKOR VAC VAC I
		VAC II VBOR VKOR
	01	B01A B02A B02B
		B20A B20B B20C
	03	D12A
	04	E02A E02B E36A
		E36B
	05	F21A F21B F21C
		F59A
	06	G12A G12B G16A
		G38A G38B
	07	H06Z
	08	I28A I28B
	09	J11A
	10	K09A K09B
	11	L09A L09B
	12	M06Z M37Z
	13	N11A N11B N25A
		N25B
	14	O02A O02B
	21B	X06A X06B X06C
39.79.97↔		BORP KORP MBOR
		MKOR VAC VAC I
		VAC II VBOR VKOR
	03	D12A
	04	E02A E02B E36A
		E36B
	05	F21A F21B F21C
		F59A
	06	G12A G12B G16A
		G38A G38B
	07	H06Z
	08	I28A I28B
	09	J11A
	10	K09A K09B
	11	L09A L09B
	12	M06Z M37Z
	13	N11A N11B N25A
		N25B
	14	O02A O02B
	21B	X06A X06B X06C
39.79.98↔		BORP KORP MBOR
		MKOR VAC VAC I
		VAC II VBOR VKOR
	01	B01A B01B B02A
		B02B B04A B04B
		B04C B20A B20B
		B20C B20D
	03	D12A
	04	E02A E02B E36A
		E36B
	05	F21A F21B F21C
		F59A
	06	G12A G12B G16A
		G38A G38B
	07	H06Z
	08	I28A I28B
	09	J11A
	10	K09A K09B
	11	L09A L09B
	12	M06Z M37Z
	13	N11A N11B N25A
		N25B
	14	O02A O02B
	21B	X06A X06B X06C
39.79.A1↔		BORP KORP MBOR
		MKOR VAC VAC I
		VAC II VBOR VKOR
	01	B01A B02A B02B
		B20A B20B B20C
	03	D12A
	04	E02A E02B E36A
		E36B
	05	F01A F01C F04Z
		F21A F21B F21C
		F28A F31A F31B
		F31C F31D F31E
		F59A
	06	G12A G12B G16A
		G38A G38B
	07	H06Z
	08	I28A I28B
	09	J11A
	10	K09A K09B
	11	L09A L09B
	12	M06Z M37Z
	13	N11A N11B N25A
		N25B
	14	O02A O02B
	21B	X06A X06B X06C
39.79.A2↔		BORP KORP MBOR
		MKOR VAC VAC I
		VAC II VBOR VKOR
	01	B01A B02A B02B
		B20A B20B B20C
	03	D12A
	04	E02A E02B E36A
		E36B
	05	F01A F01C F04Z
		F21A F21B F21C
		F28A F31A F31B

CHOP	MDC	DRG
		F31C F31D F31E F59A
	06	G12A G12B G16A G38A G38B
	07	H06Z
	08	I28A I28B
	09	J11A
	10	K09A K09B
	11	L09A L09B
	12	M06Z M37Z
	13	N11A N11B N25A N25B
	14	O02A O02B
	21B	X06A X06B X06C
39.79.A4↔		BORP KORP MBOR MKOR VAC VAC I VAC II VBOR VKOR
	01	B01A B02A B02B B20A B20B B20C
	03	D12A
	04	E02A E02B E36A E36B
	05	F01A F01C F04Z F21A F21B F21C F28A F31A F31B F31C F31D F31E F59A
	06	G12A G12B G16A G38A G38B
	07	H06Z
	08	I28A I28B
	09	J11A
	10	K09A K09B
	11	L09A L09B
	12	M06Z M37Z
	13	N11A N11B N25A N25B
	14	O02A O02B
	21B	X06A X06B X06C
39.79.A5↔		BORP KORP MBOR MKOR VAC VAC I VAC II VBOR VKOR
	01	B01A B02A B02B B20A B20B B20C
	03	D12A
	04	E02A E02B E36A E36B
	05	F01A F01C F04Z F21A F21B F21C F28A F31A F31B F31C F31D F31E F59A
	06	G12A G12B G16A G38A G38B
	07	H06Z
	08	I28A I28B
	09	J11A
	10	K09A K09B
	11	L09A L09B
	12	M06Z M37Z
	13	N11A N11B N25A N25B
	14	O02A O02B
	21B	X06A X06B X06C
39.79.A6↔		BORP KORP MBOR MKOR VAC VAC I VAC II VBOR VKOR
	01	B01A B02A B02B B20A B20B B20C
	03	D12A
	04	E02A E02B E36A E36B
	05	F01A F01C F04Z F21A F21B F21C F28A F31A F31B F31C F31D F31E F59A
	06	G12A G12B G16A G38A G38B
	07	H06Z
	08	I28A I28B
	09	J11A
	10	K09A K09B
	11	L09A L09B
	12	M06Z M37Z
	13	N11A N11B N25A N25B
	14	O02A O02B
	21B	X06A X06B X06C
39.79.A7↔		BORP KORP MBOR MKOR VAC VAC I VAC II VBOR VKOR
	01	B01A B02A B02B B20A B20B B20C
	03	D12A
	04	E02A E02B E36A E36B
	05	F01A F01C F04Z F21A F21B F21C F28A F31A F31B F31C F31D F31E F59A
	06	G12A G12B G16A G38A G38B
	07	H06Z
	08	I28A I28B
	09	J11A
	10	K09A K09B
	11	L09A L09B
	12	M06Z M37Z
	13	N11A N11B N25A N25B
	14	O02A O02B
	21B	X06A X06B X06C
39.79.A8↔		BORP KORP MBOR MKOR VAC VAC I VAC II VBOR VKOR
	01	B01A B01B B02A B02B B04A B04B B04C B20A B20B B20C B20D
	03	D12A
	04	E02A E02B E36A E36B
	05	F01A F01C F04Z F21A F21B F21C F28A F31A F31B F31C F31D F31E F59A
	06	G12A G12B G16A G38A G38B
	07	H06Z
	08	I28A I28B
	09	J11A
	10	K09A K09B
	11	L09A L09B
	12	M06Z M37Z
	13	N11A N11B N25A N25B
	14	O02A O02B
	21B	X06A X06B X06C
39.79.A9↔	01	B01A B02A B02B B20A B20B B20C
	03	D12A
	04	E02A E02B
	05	F01A F01C F04Z F21A F21B F21C F28A F31A F31B F31C F31D F31E F59A
	06	G12A G12B
	07	H06Z
	08	I28A I28B
	09	J11A
	10	K09A K09B
	11	L09A L09B
	12	M06Z M37Z
	13	N11A N11B N25A N25B
	14	O02A O02B
	21B	X06A X06B X06C
39.79.B1↔		BORP KORP MBOR MKOR VAC VAC I VAC II VBOR VKOR
	01	B01A B02A B02B B20A B20B B20C
	03	D12A
	04	E02A E02B E36A E36B
	05	F21A F21B F21C F59A
	06	G12A G12B G16A G38A G38B
	07	H06Z
	08	I28A I28B
	09	J11A
	10	K09A K09B
	11	L09A L09B
	12	M06Z M37Z
	13	N11A N11B N25A N25B
	14	O02A O02B
	21B	X06A X06B X06C
39.79.B2↔		BORP KORP MBOR MKOR VAC VAC I VAC II VBOR VKOR
	01	B01A B02A B02B B20A B20B B20C
	03	D12A
	04	E02A E02B E36A E36B
	05	F21A F21B F21C F59A
	06	G12A G12B G16A G38A G38B
	07	H06Z
	08	I28A I28B
	09	J11A
	10	K09A K09B
	11	L09A L09B
	12	M06Z M37Z
	13	N11A N11B N25A N25B
	14	O02A O02B
	21B	X06A X06B X06C
39.79.B4↔		BORP KORP MBOR MKOR VAC VAC I VAC II VBOR VKOR
	01	B01A B02A B02B B20A B20B B20C

PROC

PROC

CHOP	MDC	DRG
	03	D12A
	04	E02A E02B E36A E36B
	05	F21A F21B F21C F59A
	06	G12A G12B G16A G38A G38B
	07	H06Z
	08	I28A I28B
	09	J11A
	10	K09A K09B
	11	L09A L09B
	12	M06Z M37Z
	13	N11A N11B N25A N25B
	14	O02A O02B
	21B	X06A X06B X06C
39.79.B5↔		BORP KORP MBOR MKOR VAC VAC I VAC II VBOR VKOR
	01	B01A B02A B02B B20A B20B B20C
	03	D12A
	04	E02A E02B E36A E36B
	05	F21A F21B F21C F59A
	06	G12A G12B G16A G38A G38B
	07	H06Z
	08	I28A I28B
	09	J11A
	10	K09A K09B
	11	L09A L09B
	12	M06Z M37Z
	13	N11A N11B N25A N25B
	14	O02A O02B
	21B	X06A X06B X06C
39.79.B6↔		BORP KORP MBOR MKOR VAC VAC I VAC II VBOR VKOR
	01	B01A B02A B02B B20A B20B B20C
	03	D12A
	04	E02A E02B E36A E36B
	05	F21A F21B F21C F59A
	06	G12A G12B G16A G38A G38B
	07	H06Z
	08	I28A I28B
	09	J11A
	10	K09A K09B
	11	L09A L09B
	12	M06Z M37Z
	13	N11A N11B N25A N25B
	14	O02A O02B
	21B	X06A X06B X06C
39.79.B7↔		BORP KORP MBOR MKOR VAC VAC I VAC II VBOR VKOR
	03	D12A
	04	E02A E02B E36A E36B
	05	F21A F21B F21C F59A
	06	G12A G12B G16A G38A G38B
	07	H06Z
	08	I28A I28B
	09	J11A
	10	K09A K09B
	11	L09A L09B
	12	M06Z M37Z
	13	N11A N11B N25A N25B
	14	O02A O02B
	21B	X06A X06B X06C
39.79.B8↔		BORP KORP MBOR MKOR VAC VAC I VAC II VBOR VKOR
	01	B01A B01B B02A B02B B04A B04B B04C B20A B20B B20C B20D
	03	D12A
	04	E02A E02B E36A E36B
	05	F21A F21B F21C F59A
	06	G12A G12B G16A G38A G38B
	07	H06Z
	08	I28A I28B
	09	J11A
	10	K09A K09B
	11	L09A L09B
	12	M06Z M37Z
	13	N11A N11B N25A N25B
	14	O02A O02B
	21B	X06A X06B X06C
39.79.C1↔		BORP KORP MBOR MKOR VAC VAC I VAC II VBOR VKOR
	01	B01A B02A B02B B20A B20B B20C
	03	D12A
	04	E02A E02B E36A E36B
	05	F21A F21B F21C F59A
	06	G12A G12B G16A G38A G38B
	07	H06Z
	08	I28A I28B
	09	J11A
	10	K09A K09B
	11	L09A L09B
	12	M06Z M37Z
	13	N11A N11B N25A N25B
	14	O02A O02B
	21B	X06A X06B X06C
39.79.C2↔		BORP KORP MBOR MKOR VAC VAC I VAC II VBOR VKOR
	01	B01A B02A B02B B20A B20B B20C
	03	D12A
	04	E02A E02B E36A E36B
	05	F21A F21B F21C F59A
	06	G12A G12B G16A G38A G38B
	07	H06Z
	08	I28A I28B
	09	J11A
	10	K09A K09B
	11	L09A L09B
	12	M06Z M37Z
	13	N11A N11B N25A N25B
	14	O02A O02B
	21B	X06A X06B X06C
39.79.C4↔		BORP KORP MBOR MKOR VAC VAC I VAC II VBOR VKOR
	01	B01A B02A B02B B20A B20B B20C
	03	D12A
	04	E02A E02B E36A E36B
	05	F21A F21B F21C F59A
	06	G12A G12B G16A G38A G38B
	07	H06Z
	08	I28A I28B
	09	J11A
	10	K09A K09B
	11	L09A L09B
	12	M06Z M37Z
	13	N11A N11B N25A N25B
	14	O02A O02B
	21B	X06A X06B X06C
39.79.C5↔		BORP KORP MBOR MKOR VAC VAC I VAC II VBOR VKOR
	01	B01A B02A B02B B20A B20B B20C
	03	D12A
	04	E02A E02B E36A E36B
	05	F21A F21B F21C F59A
	06	G12A G12B G16A G38A G38B
	07	H06Z
	08	I28A I28B
	09	J11A
	10	K09A K09B
	11	L09A L09B
	12	M06Z M37Z
	13	N11A N11B N25A N25B
	14	O02A O02B
	21B	X06A X06B X06C
39.79.C6↔		BORP KORP MBOR MKOR VAC VAC I VAC II VBOR VKOR
	01	B01A B02A B02B B20A B20B B20C
	03	D12A
	04	E02A E02B E36A E36B
	05	F21A F21B F21C F59A
	06	G12A G12B G16A G38A G38B
	07	H06Z
	08	I28A I28B
	09	J11A
	10	K09A K09B
	11	L09A L09B
	12	M06Z M37Z

CHOP	MDC	DRG
	13	N11A N11B N25A N25B
	14	O02A O02B
	21B	X06A X06B X06C
39.79.C7↔		BORP KORP MBOR MKOR VAC VAC I VAC II VBOR VKOR
	03	D12A
	04	E02A E02B E36A E36B
	05	F21A F21B F21C F59A
	06	G12A G12B G16A G38A G38B
	07	H06Z
	08	I28A I28B
	09	J11A
	10	K09A K09B
	11	L09A L09B
	12	M06Z M37Z
	13	N11A N11B
	14	O02A O02B
	21B	X06A X06B X06C
39.79.C8↔		BORP KORP MBOR MKOR VAC VAC I VAC II VBOR VKOR
	01	B01A B01B B02A B02B B04A B04B B04C B20A B20B B20C B20D
	03	D12A
	04	E02A E02B E36A E36B
	05	F21A F21B F21C F59A
	06	G12A G12B G16A G38A G38B
	07	H06Z
	08	I28A I28B
	09	J11A
	10	K09A K09B
	11	L09A L09B
	12	M06Z M37Z
	13	N11A N11B N25A N25B
	14	O02A O02B
	21B	X06A X06B X06C
39.7A.09↔		BORP MBOR VAC VAC I VAC II VBOR
	04	E36A E36B
	05	F01A F01C F04Z F13A F28A F59A F59B F59C F59D F59E F59F F59G
	06	G12A G16A G38A G38B
	07	H06Z
	08	I08B I28A I28B I28C
	09	J02A J02B J03A J03B J04Z J11A J11B
	10	K09A K09B
	21B	X04Z X06A X06B X06C X07A X07B
39.7A.11↔		BORP MBOR VAC VAC I VAC II VBOR
	04	E36A E36B
	05	F01A F01C F04Z F13A F28A F59A F59B F59C F59D F59E F59F F59G
	06	G12A G16A G38A G38B
	07	H06Z
	08	I08B I28A I28B I28C
	09	J02A J02B J03A J03B J04Z J11A J11B
	10	K09A K09B
	21B	X04Z X06A X06B X06C X07A X07B
39.7A.12↔		BORP MBOR VAC VAC I VAC II VBOR
	04	E36A E36B
	05	F01A F01C F04Z F13A F28A F59A F59B F59C F59D F59E F59F F59G
	06	G12A G16A G38A G38B
	07	H06Z
	08	I08B I28A I28B I28C
	09	J02A J02B J03A J03B J04Z J11A J11B
	10	K09A K09B
	21B	X04Z X06A X06B X06C X07A X07B
39.7A.13↔		BORP MBOR VAC VAC I VAC II VBOR
	04	E36A E36B
	05	F01A F01C F04Z F13A F28A F51A F51B F59A F59B F59C F59D F59E F59F F59G
	06	G12A G16A G38A G38B
	07	H06Z
	08	I08B I28A I28B I28C
	09	J02A J02B J03A J03B J04Z J11A J11B
	10	K09A K09B
	21B	X04Z X06A X06B X06C X07A X07B
39.7A.14↔		BORP MBOR VAC VAC I VAC II VBOR
	04	E36A E36B
	05	F01A F01C F04Z F13A F28A F51A F51B F59A F59B F59C F59D F59E F59F F59G
	06	G12A G16A G38A G38B
	07	H06Z
	08	I08B I28A I28B I28C
	09	J02A J02B J03A J03B J04Z J11A J11B
	10	K09A K09B
	21B	X04Z X06A X06B X06C X07A X07B
39.7A.15↔		BORP MBOR VAC VAC I VAC II VBOR
	04	E36A E36B
	05	F01A F01C F04Z F13A F28A F51A F51B F59A F59B F59C F59D F59E F59F F59G
	06	G12A G16A G38A G38B
	07	H06Z
	08	I08B I28A I28B I28C
	09	J02A J02B J03A J03B J04Z J11A J11B
	10	K09A K09B
	21B	X04Z X06A X06B X06C X07A X07B
39.7A.16↔		BORP MBOR VAC VAC I VAC II VBOR
	04	E36A E36B
	05	F01A F01C F04Z F13A F28A F51A F51B F59A F59B F59C F59D F59E F59F F59G
	06	G12A G16A G38A G38B
	07	H06Z
	08	I08B I28A I28B I28C
	09	J02A J02B J03A J03B J04Z J11A J11B
	10	K09A K09B
	21B	X04Z X06A X06B X06C X07A X07B
39.7A.21↔		BORP MBOR VAC VAC I VAC II VBOR
	04	E36A E36B
	05	F01A F01C F04Z F13A F21A F21B F21C F28A F31A F31B F31C F31D F31E F51A F51B
	06	G12A G16A G38A G38B
	07	H06Z
	08	I08B I28A I28B I28C
	09	J02A J02B J03A J03B J04Z J11A J11B
	10	K09A K09B
	21B	X04Z X06A X06B X06C X07A X07B
39.7A.22↔		BORP KORP MBOR MKOR VAC VAC I VAC II VBOR VKOR
	01	B01A B02A B02B B20A B20B B20C
	03	D12A
	04	E02A E02B E36A E36B
	05	F01A F01C F04Z F21A F21B F21C F28A F31A F31B F31C F31D F31E F59A F59B F59C F59D F59E F59F

PROC

CHOP	MDC	DRG
		F59G
	06	G12A G12B G16A G38A G38B
	07	H06Z
	08	I28A I28B
	09	J11A
	10	K09A K09B
	11	L09A L09B
	12	M06Z M37Z
	13	N11A N11B N25A N25B
	14	O02A O02B
	21B	X06A X06B X06C
39.7A.31↔		BORP KORP MBOR MKOR VAC VAC I VAC II VBOR VKOR
	01	B01A B02A B02B B20A B20B B20C
	03	D12A
	04	E02A E02B E36A E36B
	05	F01A F01C F04Z F21A F21B F21C F28A F31A F31B F31C F31D F31E F59A F59B F59C F59D F59E F59F F59G
	06	G12A G12B G16A G38A G38B
	07	H06Z
	08	I28A I28B
	09	J11A
	10	K09A K09B
	11	L09A L09B
	12	M06Z M37Z
	13	N11A N11B N25A N25B
	14	O02A O02B
	21B	X06A X06B X06C
39.7A.32↔		BORP KORP MBOR MKOR VAC VAC I VAC II VBOR VKOR
	01	B01A B02A B02B B20A B20B B20C
	03	D12A
	04	E02A E02B E36A E36B
	05	F01A F01C F04Z F21A F21B F21C F28A F31A F31B F31C F31D F31E F59A F59B F59C F59D F59E F59F F59G
	06	G12A G12B G16A G38A G38B
	07	H06Z
	08	I28A I28B
	09	J11A
	10	K09A K09B
	11	L09A L09B
	12	M06Z M37Z
	13	N11A N11B N25A N25B
	14	O02A O02B
	21B	X06A X06B X06C
39.7A.41↔		BORP KORP MBOR MKOR VAC VAC I VAC II VBOR VKOR

CHOP	MDC	DRG
	01	B01A B02A B02B B20A B20B B20C
	03	D12A
	04	E02A E02B E36A E36B
	05	F01A F01C F04Z F21A F21B F21C F28A F31A F31B F31C F31D F31E F59A F59B F59C F59D F59E F59F F59G
	06	G12A G12B G16A G38A G38B
	07	H06Z
	08	I28A I28B
	09	J11A
	10	K09A K09B
	11	L09A L09B
	12	M06Z M37Z
	13	N11A N11B N25A N25B
	14	O02A O02B
	21B	X06A X06B X06C
39.8X.10↔		BORP MBOR VAC VAC I VAC II VBOR
	01	B01A B01B B04A B04B B04C B17A B17B
	03	D12A D12B
	04	E02A E02B E02C E36A E36B
	05	F01A F01C F04Z F28A F59A F59B F59C F59D F59E F59F
	06	G12A G16A G38A G38B
	08	I08B I28A I28B I28C
	10	K09A K09B
	21B	X06A X06B X06C
39.8X.11↔		BORP MBOR VAC VAC I VAC II VBOR
	01	B01A B01B B04A B04B B04C B17A B17B
	03	D12A D12B
	04	E02A E02B E02C E36A E36B
	05	F01A F01C F04Z F28A F59A F59B F59C F59D F59E F59F
	06	G12A G16A G38A G38B
	08	I08B I28A I28B I28C
	10	K09A K09B
	21B	X06A X06B X06C
39.8X.20↔		BORP KORP MBOR MKOR VAC VAC I VAC II VBOR VKOR
	01	B21A B21B B21C B21D B21E B21F
	04	E36A E36B
	06	G12A G16A G38A G38B
39.8X.21↔	01	B01A B01B B04A B04B B04C B17A

CHOP	MDC	DRG
		B17B
	03	D12A D12B
	04	E02A E02B E02C
	05	F01A F01C F04Z F28A F59A F59B F59C F59D F59E F59F
	08	I08B I28A I28B I28C
	10	K09A K09B
	21B	X06A X06B X06C
39.8X.22↔	01	B01A B01B B04A B04B B04C B17A B17B
	03	D12A D12B
	04	E02A E02B E02C
	05	F01A F01C F04Z F28A F59A F59B F59C F59D F59E F59F
	08	I08B I28A I28B I28C
	10	K09A K09B
	21B	X06A X06B X06C
39.8X.30↔	01	B21A B21B B21C B21D B21E B21F B21G
39.8X.31↔	01	B01A B01B B04A B04B B04C B17A B17B
	03	D12A D12B
	04	E02A E02B E02C
	05	F01A F01C F04Z F28A F59A F59B F59C F59D F59E F59F
	08	I08B I28A I28B I28C
	10	K09A K09B
	21B	X06A X06B X06C
39.8X.32↔	01	B01A B01B B04A B04B B04C B17A B17B
	03	D12A D12B
	04	E02A E02B E02C
	05	F01A F01C F04Z F28A F59A F59B F59C F59D F59E F59F
	08	I08B I28A I28B I28C
	10	K09A K09B
	21B	X06A X06B X06C
39.8X.99↔	01	B01A B01B B04A B04B B04C B17A B17B
	03	D12A D12B
	04	E02A E02B E02C
	05	F01A F01C F04Z F28A F59A F59B F59C F59D F59E F59F
	08	I08B I28A I28B I28C
	10	K09A K09B
	21B	X06A X06B X06C
39.95.10‡↔		DIAL
	01	B60A
39.95.19‡↔		DIAL KPP
	01	B60A

CHOP	MDC	DRG
39.95.20‡↔		DIAL
	01	B60A
39.95.21‡↔		DIAL KP KPP
	01	B60A
39.95.22‡↔		DIAL KP KPP
	01	B60A
39.95.23‡↔		DIAL KP KPP
	01	B60A
39.95.24‡↔		DIAL KP KPP
	01	B60A
39.95.30‡↔		DIAL
	01	B60A
39.95.31‡↔		DIAL KP KPP
	01	B60A
39.95.32‡↔		DIAL KP KPP
	01	B60A
	18B	T36A T36B T36C
39.95.33‡↔		DIAL KP KPP
	01	B60A
	18B	T36A T36B T36C
39.95.34‡↔		DIAL KP KPP
	01	B60A
	18B	T36A T36B T36C
39.95.35‡↔		DIAL HAK KP KPP
	01	B60A
	18B	T36A T36B T36C
39.95.36‡↔		DIAL HAK KP KPP
	01	B60A
	18B	T36A T36B T36C
39.95.40‡↔		DIAL
	01	B60A
39.95.41‡↔		DIAL KP KPP
	01	B60A
39.95.42‡↔		DIAL KP KPP
	01	B60A
	18B	T36A T36B T36C
39.95.43‡↔		DIAL KP KPP
	01	B60A
	18B	T36A T36B T36C
39.95.44‡↔		DIAL KP KPP
	01	B60A
	18B	T36A T36B T36C
39.95.45‡↔		DIAL HAK KP KPP
	01	B60A
	18B	T36A T36B T36C
39.95.46‡↔		DIAL HAK KP KPP
	01	B60A
	18B	T36A T36B T36C
39.95.50‡↔		DIAL
	01	B60A
39.95.59‡↔		DIAL
	01	B60A
39.95.60‡↔		DIAL
	01	B60A
39.95.61‡↔		DIAL KP KPP
	01	B60A
39.95.62‡↔		DIAL KP KPP
	01	B60A
39.95.63‡↔		DIAL KP KPP
	01	B60A
39.95.64‡↔		DIAL KP KPP
	01	B60A
39.95.70‡↔		DIAL
	01	B60A
39.95.71‡↔		DIAL KP KPP
	01	B60A

CHOP	MDC	DRG
39.95.72‡↔		DIAL KP KPP
	01	B60A
	18B	T36A T36B T36C
39.95.73‡↔		DIAL KP KPP
	01	B60A
	18B	T36A T36B T36C
39.95.74‡↔		DIAL KP KPP
	01	B60A
	18B	T36A T36B T36C
39.95.75‡↔		DIAL HAK KP KPP
	01	B60A
	18B	T36A T36B T36C
39.95.76‡↔		DIAL HAK KP KPP
	01	B60A
	18B	T36A T36B T36C
39.95.80‡↔		DIAL
	01	B60A
39.95.81‡↔		DIAL KP KPP
	01	B60A
39.95.82‡↔		DIAL KP KPP
	01	B60A
	18B	T36A T36B T36C
39.95.83‡↔		DIAL KP KPP
	01	B60A
	18B	T36A T36B T36C
39.95.84‡↔		DIAL KP KPP
	01	B60A
	18B	T36A T36B T36C
39.95.85‡↔		DIAL HAK KP KPP
	01	B60A
	18B	T36A T36B T36C
39.95.86‡↔		DIAL HAK KP KPP
	01	B60A
	18B	T36A T36B T36C
39.95.A0‡↔		DIAL
	01	B60A
39.95.A1‡↔		DIAL KP KPP
	01	B60A
39.95.A2‡↔		DIAL KP KPP
	01	B60A
	18B	T36A T36B T36C
39.95.A3‡↔		DIAL KP KPP
	01	B60A
	18B	T36A T36B T36C
39.95.A4‡↔		DIAL KP KPP
	01	B60A
	18B	T36A T36B T36C
39.95.A5‡↔		DIAL HAK KP KPP
	01	B60A
	18B	T36A T36B T36C
39.95.A6‡↔		DIAL HAK KP KPP
	01	B60A
	18B	T36A T36B T36C
39.95.B0‡↔		DIAL
	01	B60A
39.95.B1‡↔		DIAL KP KPP
	01	B60A
39.95.B2‡↔		DIAL KP KPP
	01	B60A
39.95.B3‡↔		DIAL KP KPP
	01	B60A
39.95.B9‡↔		DIAL KP KPP
	01	B60A
39.95.C0‡↔		DIAL

CHOP	MDC	DRG
	01	B60A
39.95.C1‡↔		DIAL KP KPP
	01	B60A
39.95.C2‡↔		DIAL KP KPP
	01	B60A
	18B	T36A T36B T36C
39.95.C3‡↔		DIAL KP KPP
	01	B60A
	18B	T36A T36B T36C
39.95.C4‡↔		DIAL KP KPP
	01	B60A
	18B	T36A T36B T36C
39.95.C5‡↔		DIAL HAK KP KPP
	01	B60A
	18B	T36A T36B T36C
39.95.C6‡↔		DIAL HAK KP KPP
	01	B60A
	18B	T36A T36B T36C
39.95.D0‡↔		DIAL
	01	B60A
39.95.D1‡↔		DIAL KP KPP
	01	B60A
39.95.D2‡↔		DIAL KP KPP
	01	B60A
	18B	T36A T36B T36C
39.95.D3‡↔		DIAL KP KPP
	01	B60A
	18B	T36A T36B T36C
39.95.D4‡↔		DIAL KP KPP
	01	B60A
	18B	T36A T36B T36C
39.95.D5‡↔		DIAL HAK KP KPP
	01	B60A
	18B	T36A T36B T36C
39.95.D9‡↔		DIAL HAK KP KPP
	01	B60A
	18B	T36A T36B T36C
39.95.E0‡↔		DIAL
	01	B60A
39.95.E1‡↔		DIAL KP KPP
	01	B60A
39.95.E2‡↔		DIAL KP KPP
	01	B60A
	18B	T36A T36B T36C
39.95.E3‡↔		DIAL KP KPP
	01	B60A
	18B	T36A T36B T36C
39.95.E4‡↔		DIAL KP KPP
	01	B60A
	18B	T36A T36B T36C
39.95.E5‡↔		DIAL HAK KP KPP
	01	B60A
	18B	T36A T36B T36C
39.95.E6‡↔		DIAL HAK KP KPP
	01	B60A
	18B	T36A T36B T36C
39.95.I2‡↔		HAK
	01	B60A
39.97.11‡↔		KP KPP
	01	B60A
	08	I27A I27B I27C I27D
39.97.12‡↔		KP KPP
	01	B60A

PROC

PROC

CHOP	MDC	DRG
	08	I27A I27B I27C I27D
39.97.13‡↔		KP KPP
	01	B60A
	08	I27A I27B I27C I27D
39.97.19‡↔		KP KPP
	01	B60A
	08	I27A I27B I27C I27D
39.99.10↔		BORP MBOR VAC VAC I VAC II VBOR
	01	B17A B17B
	04	E02A E02B E02C E36A E36B
	05	F01A F01C F03B F03C F03D F04Z F28A F59A F59B F59C F59D F59E F59F
	06	G12A G16A G38A G38B
	08	I08B I28A I28B I28C
	10	K09A K09B
	21B	X04Z X05Z X06A X06B X06C
39.99.20↔		BORP MBOR VAC VBOR
	01	B17A B17B
	04	E02A E02B E02C E36A E36B
	05	F01A F01C F03B F03C F03D F04Z F28A F59A F59B F59C F59D F59E F59F
	06	G12A G16A G38A G38B
	08	I08B I28A I28B I28C
	10	K09A K09B
	21B	X04Z X05Z X06A X06B X06C
39.99.21↔		BORP KORP MBOR MKOR VAC VAC I VAC II VBOR VKOR
	04	E01A E01B E05A E05B E05C E36A E36B
	05	F01A F01C F04Z F13A F28A F30Z F31A F31B F31C F31D F31E
	06	G12A G12B G16A G16B G18A G33Z G38A G38B G38C
	07	H33Z
	08	I08B I28A I28B I28C
	11	L33Z
	15	P02A P02B P02C
	21B	X06A X06B X06C X07A X07B
39.99.22↔		BORP KORP MBOR MKOR VAC VAC I VAC II VBOR VKOR
	01	B17A B17B
	04	E02A E02B E02C E36A E36B
	05	F01A F01C F03B F03C F03D F04Z F28A F59A F59B F59C F59D F59E F59F
	06	G12A G16A G38A G38B
	08	I08B I28A I28B I28C
	10	K09A K09B
	21B	X04Z X05Z X06A X06B X06C
39.99.23↔		BORP MBOR VAC VAC I VAC II VBOR
	01	B17A B17B
	04	E02A E02B E02C E36A E36B
	05	F01A F01C F03B F03C F03D F04Z F28A F59A F59B F59C F59D F59E F59F
	06	G12A G16A G38A G38B
	08	I08B I28A I28B I28C
	10	K09A K09B
	21B	X04Z X05Z X06A X06B X06C
39.99.24↔		BORP MBOR VAC VAC I VAC II VBOR
	01	B17A B17B
	04	E02A E02B E02C E36A E36B
	05	F01A F01C F03B F03C F03D F04Z F28A F59A F59B F59C F59D F59E F59F
	06	G12A G16A G38A G38B
	08	I08B I28A I28B I28C
	10	K09A K09B
	21B	X04Z X05Z X06A X06B X06C
39.99.31↔		BORP MBOR VAC VAC I VAC II VBOR
	01	B17A B17B
	04	E02A E02B E02C E36A E36B
	05	F01A F01C F03B F03C F03D F19Z
	06	G12A G16A G38A G38B
	08	I08B I28A I28B I28C
	10	K09A K09B
	21B	X04Z X05Z X06A X06B X06C
39.99.32↔		BORP MBOR VAC VAC I VAC II VBOR
	01	B17A B17B
	04	E02A E02B E02C E36A E36B
	05	F01A F01C F03B F03C F03D F19Z
	06	G12A G16A G38A G38B
	08	I08B I28A I28B I28C
	10	K09A K09B
	21B	X04Z X05Z X06A X06B X06C
39.99.38↔		BORP MBOR VAC VAC I VAC II VBOR
	01	B17A B17B
	04	E02A E02B E02C E36A E36B
	05	F01A F01C F03B F03C F03D F19Z
	06	G12A G16A G38A G38B
	08	I08B I28A I28B I28C
	10	K09A K09B
	21B	X04Z X05Z X06A X06B X06C
39.99.39↔		BORP MBOR VAC VBOR
	01	B17A B17B
	04	E02A E02B E02C E36A E36B
	05	F01A F01C F03B F03C F03D F04Z F28A F59A F59B F59C F59D F59E F59F
	06	G12A G16A G38A G38B
	08	I08B I28A I28B I28C
	10	K09A K09B
	21B	X04Z X05Z X06A X06B X06C
39.9A.11‡↔		KP
	01	B60A
	09	J11A J11B
	17	R62A R65A R65B
39.9A.21↔	01	B21A B21B B22Z
39.9A.22↔	01	B21A B21B B22Z
39.9A.23↔	01	B21A B21B B22Z
39.9A.24↔	01	B21A B21B B22Z
39.A1.11‡↔	01	B60A
	05	F01A F01C F12A F18A
39.A1.12‡↔	01	B60A
	05	F01A F01C F12A F18A
39.A1.21↔		BORP MBOR VAC VBOR
	04	E36A E36B
	05	F01A F01B F01C F01D F01E F01F F03A F03B F04Z F06A F12A F12B F12C F12D F18A F18B F98B
	06	G12A G16A G38A G38B
39.B1.09↔	03	D12A
	04	E02A E02B
	05	F01A F01C F04Z F21A F21B F21C F28A F59A F59B F59C F59D F59E F59F F59G
	06	G12A G12B
	07	H06Z
	08	I28A I28B

CHOP	MDC	DRG
	09	J02A J02B J03A
		J03B J04Z J11A
	10	K09A K09B
	11	L09A L09B
	12	M06Z M37Z
	13	N11A N11B
	14	O02A O02B
	21B	X05Z X06A X06B
		X06C
39.B1.11↔		BORP KORP MBOR
		MKOR VAC VAC I
		VAC II VBOR VKOR
	01	B01A B01B B02A
		B02B B09A B09B
		B09C B09D B20A
		B20B B20C
	03	D12A
	04	E02A E02B E36A
		E36B
	05	F01A F01C F04Z
		F21A F21B F21C
		F28A F59A F59B
		F59C F59D F59E
		F59F F59G
	06	G12A G12B G16A
		G38A G38B
	07	H06Z
	08	I28A I28B
	09	J02A J02B J03A
		J03B J04Z J11A
	10	K09A K09B
	11	L09A L09B
	12	M06Z M37Z
	13	N11A N11B
	14	O02A O02B
	21B	X06A X06B X06C
		X07A X07B
39.B1.22↔	01	B01A B01B B04A
		B04B B04C
	03	D12A
	04	E02A E02B
	05	F01A F01C F04Z
		F21A F21B F21C
		F28A F59A F59B
		F59C F59D F59E
		F59F F59G
	06	G12A G12B
	07	H06Z
	08	I28A I28B
	09	J02A J02B J03A
		J03B J04Z J11A
	10	K09A K09B
	11	L09A L09B
	12	M06Z M37Z
	13	N11A N11B
	14	O02A O02B
	21B	X06A X06B X06C
39.B1.23↔		BORP MBOR VAC
		VAC I VAC II VBOR
	01	B01A B01B B04A
		B04B B04C
	03	D12A
	04	E02A E02B E36A
		E36B
	05	F01A F01C F04Z
		F21A F21B F21C
		F28A F59A F59B
		F59C F59D F59E
		F59F F59G
	06	G12A G12B G16A
		G38A G38B
	07	H06Z
	08	I28A I28B
	09	J02A J02B J03A
		J03B J04Z J11A
	10	K09A K09B
	11	L09A L09B
	12	M06Z M37Z
	13	N11A N11B
	14	O02A O02B
	21B	X06A X06B X06C
39.B1.25↔		BORP MBOR VAC
		VAC I VAC II VBOR
	01	B01A B01B B04A
		B04B B04C
	03	D12A
	04	E02A E02B E36A
		E36B
	05	F01A F01C F04Z
		F21A F21B F21C
		F28A F59A F59B
		F59C F59D F59E
		F59F F59G
	06	G12A G12B G16A
		G38A G38B
	07	H06Z
	08	I28A I28B
	09	J02A J02B J03A
		J03B J04Z J11A
	10	K09A K09B
	11	L09A L09B
	12	M06Z M37Z
	13	N11A N11B
	14	O02A O02B
	21B	X06A X06B X06C
39.B1.26↔		BORP MBOR VAC
		VAC I VAC II VBOR
	01	B01A B01B B04A
		B04B B04C
	03	D12A
	04	E02A E02B E36A
		E36B
	05	F01A F01C F04Z
		F21A F21B F21C
		F28A F59A F59B
		F59C F59D F59E
		F59F F59G
	06	G12A G12B G16A
		G38A G38B
	07	H06Z
	08	I28A I28B
	09	J02A J02B J03A
		J03B J04Z J11A
	10	K09A K09B
	11	L09A L09B
	12	M06Z M37Z
	13	N11A N11B
	14	O02A O02B
	21B	X06A X06B X06C
39.B1.27↔		BORP MBOR VAC
		VAC I VAC II VBOR
	01	B01A B01B B04A
		B04B B04C
	03	D12A
	04	E02A E02B E36A
		E36B
	05	F01A F01C F04Z
		F21A F21B F21C
		F28A F59A F59B
		F59C F59D F59E
		F59F F59G
	06	G12A G12B G16A
		G38A G38B
	07	H06Z
	08	I28A I28B
	09	J02A J02B J03A
		J03B J04Z J11A
	10	K09A K09B
	11	L09A L09B
	12	M06Z M37Z
	13	N11A N11B
	14	O02A O02B
	21B	X06A X06B X06C
39.B1.28↔		BORP MBOR VAC
		VAC I VAC II VBOR
	01	B01A B01B B04A
		B04B B04C
	03	D12A
	04	E02A E02B E36A
		E36B
	05	F01A F01C F04Z
		F21A F21B F21C
		F28A F59A F59B
		F59C F59D F59E
		F59F F59G
	06	G12A G12B G16A
		G38A G38B
	07	H06Z
	08	I28A I28B
	09	J02A J02B J03A
		J03B J04Z J11A
	10	K09A K09B
	11	L09A L09B
	12	M06Z M37Z
	13	N11A N11B
	14	O02A O02B
	21B	X06A X06B X06C
39.B1.31↔		BORP MBOR VAC
		VAC I VAC II VBOR
	03	D12A
	04	E02A E02B E36A
		E36B
	05	F01A F01C F04Z
		F21A F21B F21C
		F28A F59A F59B
		F59C F59D F59E
		F59F F59G
	06	G12A G12B G16A
		G38A G38B
	07	H06Z
	08	I28A I28B
	09	J02A J02B J03A
		J03B J04Z J11A
	10	K09A K09B
	11	L09A L09B
	12	M06Z M37Z
	13	N11A N11B
	14	O02A O02B
	21B	X05Z X06A X06B
		X06C
39.B1.51↔		BORP MBOR VAC
		VAC I VAC II VBOR
	03	D12A
	04	E02A E02B E36A
		E36B
	05	F01A F01C F04Z
		F21A F21B F21C
		F28A F59A F59B
		F59C F59D F59E
		F59F F59G

PROC

PROC

CHOP	MDC	DRG
	06	G12A G12B G16A
		G38A G38B
	07	H06Z
	08	I28A I28B
	09	J02A J02B J03A
		J03B J04Z J11A
	10	K09A K09B
	11	L09A L09B
	12	M06Z M37Z
	13	N11A N11B
	14	O02A O02B
	21B	X05Z X06A X06B
		X06C
39.B1.71↔		BORP MBOR VAC
		VAC I VAC II VBOR
	03	D12A
	04	E02A E02B E36A
		E36B
	05	F01A F01C F04Z
		F21A F21B F21C
		F28A F59A F59B
		F59C F59D F59E
		F59F F59G
	06	G12A G12B G16A
		G38A G38B
	07	H06Z
	08	I28A I28B
	09	J02A J02B J03A
		J03B J04Z J11A
	10	K09A K09B
	11	L09A L09B
	12	M06Z M37Z
	13	N11A N11B
	14	O02A O02B
	21B	X06A X06B X06C
39.B1.74↔		BORP MBOR VAC
		VAC I VAC II VBOR
	03	D12A
	04	E02A E02B E36A
		E36B
	05	F01A F01C F04Z
		F21A F21B F21C
		F28A F59A F59B
		F59C F59D F59E
		F59F F59G
	06	G12A G12B G16A
		G38A G38B
	07	H06Z
	08	I28A I28B
	09	J02A J02B J03A
		J03B J04Z J11A
	10	K09A K09B
	11	L09A L09B
	12	M06Z M37Z
	13	N11A N11B
	14	O02A O02B
	21B	X06A X06B X06C
39.B1.75↔		BORP MBOR VAC
		VAC I VAC II VBOR
	04	E36A E36B
	05	F01A F01C F12A
		F24A F24B F24C
		F24D F50A F50B
		F59D F59E
	06	G12A G16A G38A
		G38B
39.B1.81↔		BORP MBOR VAC
		VAC I VAC II VBOR
	03	D12A
	04	E02A E02B E36A

CHOP	MDC	DRG
		E36B
	05	F01A F01C F04Z
		F21A F21B F21C
		F28A F59A F59B
		F59C F59D F59E
		F59F F59G
	06	G12A G12B G16A
		G38A G38B
	07	H06Z
	08	I28A I28B
	09	J02A J02B J03A
		J03B J04Z J11A
	10	K09A K09B
	11	L09A L09B
	12	M06Z M37Z
	13	N11A N11B
	14	O02A O02B
	21B	X05Z X06A X06B
		X06C
39.B1.A4↔		BORP MBOR VAC
		VAC I VAC II VBOR
	03	D12A
	04	E02A E02B E36A
		E36B
	05	F01A F01C F04Z
		F21A F21B F21C
		F28A F59A F59B
		F59C F59D F59E
		F59F F59G
	06	G12A G12B G16A
		G38A G38B
	07	H06Z
	08	I28A I28B
	09	J02A J02B J03A
		J03B J04Z J11A
	10	K09A K09B
	11	L09A L09B
	12	M06Z M37Z
	13	N11A N11B
	14	O02A O02B
	21B	X06A X06B X06C
39.B1.C1↔		BORP MBOR VAC
		VAC I VAC II VBOR
	03	D12A
	04	E02A E02B E36A
		E36B
	05	F01A F01C F04Z
		F21A F21B F21C
		F28A F59A F59B
		F59C F59D F59E
		F59F F59G
	06	G12A G12B G16A
		G38A G38B
	07	H06Z
	08	I28A I28B
	09	J02A J02B J03A
		J03B J04Z J11A
	10	K09A K09B
	11	L09A L09B
	12	M06Z M37Z
	13	N11A N11B
	14	O02A O02B
	21B	X06A X06B X06C
39.B1.C3↔		BORP MBOR VAC
		VAC I VAC II VBOR
	03	D12A
	04	E02A E02B E36A
		E36B
	05	F01A F01C F04Z
		F21A F21B F21C

CHOP	MDC	DRG
		F28A F59A F59B
		F59C F59D F59E
		F59F F59G
	06	G12A G12B G16A
		G38A G38B
	07	H06Z
	08	I28A I28B
	09	J02A J02B J03A
		J03B J04Z J11A
	10	K09A K09B
	11	L09A L09B
	12	M06Z M37Z
	13	N11A N11B
	14	O02A O02B
	21B	X06A X06B X06C
39.B1.D1↔		BORP MBOR VAC
		VAC I VAC II VBOR
	03	D12A
	04	E02A E02B E36A
		E36B
	05	F01A F01C F04Z
		F21A F21B F21C
		F28A F59A F59B
		F59C F59D F59E
		F59F F59G
	06	G12A G12B G16A
		G38A G38B
	07	H06Z
	08	I28A I28B
	09	J02A J02B J03A
		J03B J04Z J11A
	10	K09A K09B
	11	L09A L09B
	12	M06Z M37Z
	13	N11A N11B
	14	O02A O02B
	21B	X06A X06B X06C
39.B1.G1↔		BORP MBOR VAC
		VAC I VAC II VBOR
	03	D12A
	04	E02A E02B E36A
		E36B
	05	F01A F01C F04Z
		F21A F21B F21C
		F28A F59A F59B
		F59C F59D F59E
		F59F F59G
	06	G12A G12B G16A
		G38A G38B
	07	H06Z
	08	I28A I28B
	09	J02A J02B J03A
		J03B J04Z J11A
	10	K09A K09B
	11	L09A L09B
	12	M06Z M37Z
	13	N11A N11B
	14	O02A O02B
	21B	X05Z X06A X06B
		X06C
39.B1.H1↔		BORP MBOR VAC
		VAC I VAC II VBOR
	03	D12A
	04	E02A E02B E36A
		E36B
	05	F01A F01C F04Z
		F21A F21B F21C
		F28A F59A F59B
		F59C F59D F59E
		F59F F59G

CHOP	MDC	DRG
	06	G12A G12B G16A G38A G38B
	07	H06Z
	08	I28A I28B
	09	J02A J02B J03A J03B J04Z J11A
	10	K09A K09B
	11	L09A L09B
	12	M06Z M37Z
	13	N11A N11B
	14	O02A O02B
	21B	X05Z X06A X06B X06C
39.B1.J3↔		BORP MBOR VAC VAC I VAC II VBOR
	03	D12A
	04	E02A E02B E36A E36B
	05	F01A F01C F04Z F21A F21B F21C F28A F59A F59B F59C F59D F59E F59F F59G
	06	G12A G12B G16A G38A G38B
	07	H06Z
	08	I28A I28B
	09	J02A J02B J03A J03B J04Z J11A
	10	K09A K09B
	11	L09A L09B
	12	M06Z M37Z
	13	N11A N11B
	14	O02A O02B
	21B	X06A X06B X06C
39.B1.J7↔		BORP MBOR VAC VAC I VAC II VBOR
	03	D12A
	04	E02A E02B E36A E36B
	05	F01A F01C F04Z F21A F21B F21C F28A F59A F59B F59C F59D F59E F59F F59G
	06	G12A G12B G16A G38A G38B
	07	H06Z
	08	I28A I28B
	09	J02A J02B J03A J03B J04Z J11A
	10	K09A K09B
	11	L09A L09B
	12	M06Z M37Z
	13	N11A N11B
	14	O02A O02B
	21B	X06A X06B X06C
39.B1.JB↔		BORP MBOR VAC VAC I VAC II VBOR
	03	D12A
	04	E02A E02B E36A E36B
	05	F01A F01C F04Z F21A F21B F21C F28A F59A F59B F59C F59D F59E F59F F59G
	06	G12A G12B G16A G38A G38B
	07	H06Z
	08	I28A I28B
	09	J02A J02B J03A J03B J04Z J11A
	10	K09A K09B
	11	L09A L09B
	12	M06Z M37Z
	13	N11A N11B
	14	O02A O02B
	21B	X06A X06B X06C
39.B1.JF↔		BORP MBOR VAC VAC I VAC II VBOR
	03	D12A
	04	E02A E02B E36A E36B
	05	F01A F01C F04Z F21A F21B F21C F28A F59A F59B F59C F59D F59E F59F F59G
	06	G12A G12B G16A G38A G38B
	07	H06Z
	08	I28A I28B
	09	J02A J02B J03A J03B J04Z J11A
	10	K09A K09B
	11	L09A L09B
	12	M06Z M37Z
	13	N11A N11B
	14	O02A O02B
	21B	X05Z X06A X06B X06C
39.B1.JI↔		BORP MBOR VAC VAC I VAC II VBOR
	03	D12A
	04	E02A E02B E36A E36B
	05	F01A F01C F04Z F21A F21B F21C F28A F59A F59B F59C F59D F59E F59F F59G
	06	G12A G12B G16A G38A G38B
	07	H06Z
	08	I28A I28B
	09	J02A J02B J03A J03B J04Z J11A
	10	K09A K09B
	11	L09A L09B
	12	M06Z M37Z
	13	N11A N11B
	14	O02A O02B
	21B	X06A X06B X06C
39.B1.L1↔		BORP KORP MBOR MKOR VAC VAC I VAC II VBOR VKOR
	01	B01A B01B B02A B02B B04A B04B B04C B20A B20B B20C
	03	D12A
	04	E02A E02B E36A E36B
	05	F01A F01C F04Z F21A F21B F21C F28A F59A F59B F59C F59D F59E F59F F59G
	06	G12A G12B G16A G38A G38B
	07	H06Z
	08	I28A I28B
	09	J02A J02B J03A J03B J04Z J11A
	10	K09A K09B
	11	L09A L09B
	12	M06Z M37Z
	13	N11A N11B N25A N25B
	14	O02A O02B
	21B	X06A X06B X06C
39.B1.M2↔		BORP MBOR VAC VAC I VAC II VBOR
	04	E36A E36B
	05	F01A F01C F12A F24A F24B F24C F24D F50A F50B F59D F59E
	06	G12A G16A G38A G38B
39.B1.N2↔		BORP MBOR VAC VAC I VAC II VBOR
	04	E36A E36B
	05	F01A F01C F12A F24A F24B F24C F24D F50A F50B F59D F59E
	06	G12A G16A G38A G38B
39.B2.09↔	03	D12A
	04	E02A E02B
	05	F01A F01C F04Z F21A F21B F21C F28A F59A F59B F59C F59D F59E F59F F59G
	06	G12A G12B
	07	H06Z
	08	I28A I28B
	09	J02A J02B J03A J03B J04Z J11A
	10	K09A K09B
	11	L09A L09B
	12	M06Z M37Z
	13	N11A N11B
	14	O02A O02B
	21B	X05Z X06A X06B X06C
39.B2.11↔		BORP KORP MBOR MKOR VAC VAC I VAC II VBOR VKOR
	01	B01A B01B B02A B02B B09A B09B B09C B09D B20A B20B B20C
	03	D12A
	04	E02A E02B E36A E36B
	05	F01A F01C F04Z F21A F21B F21C F28A F59A F59B F59C F59D F59E F59F F59G
	06	G12A G12B G16A G38A G38B
	07	H06Z
	08	I28A I28B
	09	J02A J02B J03A J03B J04Z J11A
	10	K09A K09B

PROC

PROC

CHOP	MDC	DRG
	11	L09A L09B
	12	M06Z M37Z
	13	N11A N11B
	14	O02A O02B
	21B	X06A X06B X06C
		X07A X07B
39.B2.22↔	01	B01A B01B B04A
		B04B B04C
	03	D12A
	04	E02A E02B
	05	F01A F01C F04Z
		F21A F21B F21C
		F28A F59A F59B
		F59C F59D F59E
		F59F F59G
	06	G12A G12B
	07	H06Z
	08	I28A I28B
	09	J02A J02B J03A
		J03B J04Z J11A
	10	K09A K09B
	11	L09A L09B
	12	M06Z M37Z
	13	N11A N11B
	14	O02A O02B
	21B	X06A X06B X06C
39.B2.23↔		BORP MBOR VAC
		VAC I VAC II VBOR
	01	B01A B01B B04A
		B04B B04C
	03	D12A
	04	E02A E02B E36A
		E36B
	05	F01A F01C F04Z
		F21A F21B F21C
		F28A F59A F59B
		F59C F59D F59E
		F59F F59G
	06	G12A G12B G16A
		G38A G38B
	07	H06Z
	08	I28A I28B
	09	J02A J02B J03A
		J03B J04Z J11A
	10	K09A K09B
	11	L09A L09B
	12	M06Z M37Z
	13	N11A N11B
	14	O02A O02B
	21B	X06A X06B X06C
39.B2.25↔		BORP MBOR VAC
		VAC I VAC II VBOR
	01	B01A B01B B04A
		B04B B04C
	03	D12A
	04	E02A E02B E36A
		E36B
	05	F01A F01C F04Z
		F21A F21B F21C
		F28A F59A F59B
		F59C F59D F59E
		F59F F59G
	06	G12A G12B G16A
		G38A G38B
	07	H06Z
	08	I28A I28B
	09	J02A J02B J03A
		J03B J04Z J11A
	10	K09A K09B
	11	L09A L09B

CHOP	MDC	DRG
	12	M06Z M37Z
	13	N11A N11B
	14	O02A O02B
	21B	X06A X06B X06C
39.B2.26↔		BORP MBOR VAC
		VAC I VAC II VBOR
	01	B01A B01B B04A
		B04B B04C
	03	D12A
	04	E02A E02B E36A
		E36B
	05	F01A F01C F04Z
		F21A F21B F21C
		F28A F59A F59B
		F59C F59D F59E
		F59F F59G
	06	G12A G12B G16A
		G38A G38B
	07	H06Z
	08	I28A I28B
	09	J02A J02B J03A
		J03B J04Z J11A
	10	K09A K09B
	11	L09A L09B
	12	M06Z M37Z
	13	N11A N11B
	14	O02A O02B
	21B	X06A X06B X06C
39.B2.27↔		BORP MBOR VAC
		VAC I VAC II VBOR
	01	B01A B01B B04A
		B04B B04C
	03	D12A
	04	E02A E02B E36A
		E36B
	05	F01A F01C F04Z
		F21A F21B F21C
		F28A F59A F59B
		F59C F59D F59E
		F59F F59G
	06	G12A G12B G16A
		G38A G38B
	07	H06Z
	08	I28A I28B
	09	J02A J02B J03A
		J03B J04Z J11A
	10	K09A K09B
	11	L09A L09B
	12	M06Z M37Z
	13	N11A N11B
	14	O02A O02B
	21B	X06A X06B X06C
39.B2.28↔		BORP MBOR VAC
		VAC I VAC II VBOR
	01	B01A B01B B04A
		B04B B04C
	03	D12A
	04	E02A E02B E36A
		E36B
	05	F01A F01C F04Z
		F21A F21B F21C
		F28A F59A F59B
		F59C F59D F59E
		F59F F59G
	06	G12A G12B G16A
		G38A G38B
	07	H06Z
	08	I28A I28B
	09	J02A J02B J03A
		J03B J04Z J11A

CHOP	MDC	DRG
	10	K09A K09B
	11	L09A L09B
	12	M06Z M37Z
	13	N11A N11B
	14	O02A O02B
	21B	X06A X06B X06C
39.B2.31↔		BORP MBOR VAC
		VAC I VAC II VBOR
	03	D12A
	04	E02A E02B E36A
		E36B
	05	F01A F01C F04Z
		F21A F21B F21C
		F28A F59A F59B
		F59C F59D F59E
		F59F F59G
	06	G12A G12B G16A
		G38A G38B
	07	H06Z
	08	I28A I28B
	09	J02A J02B J03A
		J03B J04Z J11A
	10	K09A K09B
	11	L09A L09B
	12	M06Z M37Z
	13	N11A N11B
	14	O02A O02B
	21B	X04Z X05Z X06A
		X06B X06C
39.B2.51↔		BORP MBOR VAC
		VAC I VAC II VBOR
	03	D12A
	04	E02A E02B E36A
		E36B
	05	F01A F01C F04Z
		F21A F21B F21C
		F28A F59A F59B
		F59C F59D F59E
		F59F F59G
	06	G12A G12B G16A
		G38A G38B
	07	H06Z
	08	I28A I28B
	09	J02A J02B J03A
		J03B J04Z J11A
	10	K09A K09B
	11	L09A L09B
	12	M06Z M37Z
	13	N11A N11B
	14	O02A O02B
	21B	X04Z X05Z X06A
		X06B X06C
39.B2.71↔		BORP MBOR VAC
		VAC I VAC II VBOR
	03	D12A
	04	E02A E02B E36A
		E36B
	05	F01A F01C F04Z
		F21A F21B F21C
		F28A F59A F59B
		F59C F59D F59E
		F59F F59G
	06	G12A G12B G16A
		G38A G38B
	07	H06Z
	08	I28A I28B
	09	J02A J02B J03A
		J03B J04Z J11A
	10	K09A K09B
	11	L09A L09B

CHOP	MDC	DRG
	12	M06Z M37Z
	13	N11A N11B
	14	O02A O02B
	21B	X06A X06B X06C
39.B2.74↔		BORP MBOR VAC
		VAC I VAC II VBOR
	03	D12A
	04	E02A E02B E36A
		E36B
	05	F01A F01C F04Z
		F21A F21B F21C
		F28A F59A F59B
		F59C F59D F59E
		F59F F59G
	06	G12A G12B G16A
		G38A G38B
	07	H06Z
	08	I28A I28B
	09	J02A J02B J03A
		J03B J04Z J11A
	10	K09A K09B
	11	L09A L09B
	12	M06Z M37Z
	13	N11A N11B
	14	O02A O02B
	21B	X06A X06B X06C
39.B2.75↔		BORP MBOR VAC
		VAC I VAC II VBOR
	04	E36A E36B
	05	F01A F01C F12A
		F24A F24B F24C
		F24D F50A F50B
		F59D F59E
	06	G12A G16A G38A
		G38B
39.B2.81↔		BORP MBOR VAC
		VAC I VAC II VBOR
	03	D12A
	04	E02A E02B E36A
		E36B
	05	F01A F01C F04Z
		F21A F21B F21C
		F28A F59A F59B
		F59C F59D F59E
		F59F F59G
	06	G12A G12B G16A
		G38A G38B
	07	H06Z
	08	I28A I28B
	09	J02A J02B J03A
		J03B J04Z J11A
	10	K09A K09B
	11	L09A L09B
	12	M06Z M37Z
	13	N11A N11B
	14	O02A O02B
	21B	X04Z X05Z X06A
		X06B X06C
39.B2.A4↔		BORP MBOR VAC
		VAC I VAC II VBOR
	03	D12A
	04	E02A E02B E36A
		E36B
	05	F01A F01C F04Z
		F21A F21B F21C
		F28A F59A F59B
		F59C F59D F59E
		F59F F59G
	06	G12A G12B G16A
		G38A G38B
	07	H06Z
	08	I28A I28B
	09	J02A J02B J03A
		J03B J04Z J11A
	10	K09A K09B
	11	L09A L09B
	12	M06Z M37Z
	13	N11A N11B
	14	O02A O02B
	21B	X06A X06B X06C
39.B2.C1↔		BORP MBOR VAC
		VAC I VAC II VBOR
	03	D12A
	04	E02A E02B E36A
		E36B
	05	F01A F01C F04Z
		F21A F21B F21C
		F28A F59A F59B
		F59C F59D F59E
		F59F F59G
	06	G12A G12B G16A
		G38A G38B
	07	H06Z
	08	I28A I28B
	09	J02A J02B J03A
		J03B J04Z J11A
	10	K09A K09B
	11	L09A L09B
	12	M06Z M37Z
	13	N11A N11B
	14	O02A O02B
	21B	X06A X06B X06C
39.B2.C3↔		BORP MBOR VAC
		VAC I VAC II VBOR
	03	D12A
	04	E02A E02B E36A
		E36B
	05	F01A F01C F04Z
		F21A F21B F21C
		F28A F59A F59B
		F59C F59D F59E
		F59F F59G
	06	G12A G12B G16A
		G38A G38B
	07	H06Z
	08	I28A I28B
	09	J02A J02B J03A
		J03B J04Z J11A
	10	K09A K09B
	11	L09A L09B
	12	M06Z M37Z
	13	N11A N11B
	14	O02A O02B
	21B	X06A X06B X06C
39.B2.D1↔		BORP MBOR VAC
		VAC I VAC II VBOR
	03	D12A
	04	E02A E02B E36A
		E36B
	05	F01A F01C F04Z
		F21A F21B F21C
		F28A F59A F59B
		F59C F59D F59E
		F59F F59G
	06	G12A G12B G16A
		G38A G38B
	07	H06Z
	08	I28A I28B
	09	J02A J02B J03A
		J03B J04Z J11A
	10	K09A K09B
	11	L09A L09B
	12	M06Z M37Z
	13	N11A N11B
	14	O02A O02B
	21B	X06A X06B X06C
39.B2.G1↔		BORP MBOR VAC
		VAC I VAC II VBOR
	03	D12A
	04	E02A E02B E36A
		E36B
	05	F01A F01C F04Z
		F21A F21B F21C
		F28A F59A F59B
		F59C F59D F59E
		F59F F59G
	06	G12A G12B G16A
		G38A G38B
	07	H06Z
	08	I28A I28B
	09	J02A J02B J03A
		J03B J04Z J11A
	10	K09A K09B
	11	L09A L09B
	12	M06Z M37Z
	13	N11A N11B
	14	O02A O02B
	21B	X04Z X05Z X06A
		X06B X06C
39.B2.H1↔		BORP MBOR VAC
		VAC I VAC II VBOR
	03	D12A
	04	E02A E02B E36A
		E36B
	05	F01A F01C F04Z
		F21A F21B F21C
		F28A F59A F59B
		F59C F59D F59E
		F59F F59G
	06	G12A G12B G16A
		G38A G38B
	07	H06Z
	08	I28A I28B
	09	J02A J02B J03A
		J03B J04Z J11A
	10	K09A K09B
	11	L09A L09B
	12	M06Z M37Z
	13	N11A N11B
	14	O02A O02B
	21B	X04Z X05Z X06A
		X06B X06C
39.B2.J3↔		BORP MBOR VAC
		VAC I VAC II VBOR
	03	D12A
	04	E02A E02B E36A
		E36B
	05	F01A F01C F04Z
		F21A F21B F21C
		F28A F59A F59B
		F59C F59D F59E
		F59F F59G
	06	G12A G12B G16A
		G38A G38B
	07	H06Z
	08	I28A I28B
	09	J02A J02B J03A
		J03B J04Z J11A
	10	K09A K09B
	11	L09A L09B

PROC

CHOP	MDC	DRG
	12	M06Z M37Z
	13	N11A N11B
	14	O02A O02B
	21B	X06A X06B X06C
39.B2.J7↔		BORP MBOR VAC
		VAC I VAC II VBOR
	03	D12A
	04	E02A E02B E36A
		E36B
	05	F01A F01C F04Z
		F21A F21B F21C
		F28A F59A F59B
		F59C F59D F59E
		F59F F59G
	06	G12A G12B G16A
		G38A G38B
	07	H06Z
	08	I28A I28B
	09	J02A J02B J03A
		J03B J04Z J11A
	10	K09A K09B
	11	L09A L09B
	12	M06Z M37Z
	13	N11A N11B
	14	O02A O02B
	21B	X06A X06B X06C
39.B2.JB↔		BORP MBOR VAC
		VAC I VAC II VBOR
	03	D12A
	04	E02A E02B E36A
		E36B
	05	F01A F01C F04Z
		F21A F21B F21C
		F28A F59A F59B
		F59C F59D F59E
		F59F F59G
	06	G12A G12B G16A
		G38A G38B
	07	H06Z
	08	I28A I28B
	09	J02A J02B J03A
		J03B J04Z J11A
	10	K09A K09B
	11	L09A L09B
	12	M06Z M37Z
	13	N11A N11B
	14	O02A O02B
	21B	X06A X06B X06C
39.B2.JF↔		BORP MBOR VAC
		VAC I VAC II VBOR
	03	D12A
	04	E02A E02B E36A
		E36B
	05	F01A F01C F04Z
		F21A F21B F21C
		F28A F59A F59B
		F59C F59D F59E
		F59F F59G
	06	G12A G12B G16A
		G38A G38B
	07	H06Z
	08	I28A I28B
	09	J02A J02B J03A
		J03B J04Z J11A
	10	K09A K09B
	11	L09A L09B
	12	M06Z M37Z
	13	N11A N11B
	14	O02A O02B
	21B	X04Z X05Z X06A

CHOP	MDC	DRG
		X06B X06C
39.B2.JI↔		BORP MBOR VAC
		VAC I VAC II VBOR
	03	D12A
	04	E02A E02B E36A
		E36B
	05	F01A F01C F04Z
		F21A F21B F21C
		F28A F59A F59B
		F59C F59D F59E
		F59F F59G
	06	G12A G12B G16A
		G38A G38B
	07	H06Z
	08	I28A I28B
	09	J02A J02B J03A
		J03B J04Z J11A
	10	K09A K09B
	11	L09A L09B
	12	M06Z M37Z
	13	N11A N11B
	14	O02A O02B
	21B	X06A X06B X06C
39.B2.L1↔		BORP KORP MBOR
		MKOR VAC VAC I
		VAC II VBOR VKOR
	01	B01A B01B B02A
		B02B B04A B04B
		B04C B20A B20B
		B20C
	03	D12A
	04	E02A E02B E36A
		E36B
	05	F01A F01C F04Z
		F21A F21B F21C
		F28A F59A F59B
		F59C F59D F59E
		F59F F59G
	06	G12A G12B G16A
		G38A G38B
	07	H06Z
	08	I28A I28B
	09	J11A
	10	K09A K09B
	11	L09A L09B
	12	M06Z M37Z
	13	N11A N11B N25A
		N25B
	14	O02A O02B
	21B	X06A X06B X06C
39.B2.M2↔		BORP MBOR VAC
		VAC I VAC II VBOR
	04	E36A E36B
	05	F01A F01C F12A
		F24A F24B F24C
		F24D F50A F50B
		F59D F59E
	06	G12A G16A G38A
		G38B
39.B2.N2↔		BORP MBOR VAC
		VAC I VAC II VBOR
	04	E36A E36B
	05	F01A F01C F12A
		F24A F24B F24C
		F24D F50A F50B
		F59D F59E
	06	G12A G16A G38A
		G38B
39.B3.09↔	03	D12A
	04	E02A E02B

CHOP	MDC	DRG
	05	F01A F01C F04Z
		F21A F21B F21C
		F28A F59A F59B
		F59C F59D F59E
		F59F
	06	G12A G12B
	07	H06Z
	08	I28A I28B
	09	J02A J02B J03A
		J03B J04Z J11A
	10	K09A K09B
	11	L09A L09B
	12	M06Z M37Z
	13	N11A N11B
	14	O02A O02B
	21B	X05Z X06A X06B
		X06C
39.B3.11↔		BORP KORP MBOR
		MKOR VAC VAC I
		VAC II VBOR VKOR
	01	B01A B01B B02A
		B02B B09A B09B
		B09C B09D B20A
		B20B B20C
	03	D12A
	04	E02A E02B E36A
		E36B
	05	F01A F01C F04Z
		F21A F21B F21C
		F28A F59A F59B
		F59C F59D F59E
		F59F F59G
	06	G12A G12B G16A
		G38A G38B
	07	H06Z
	08	I28A I28B
	09	J02A J02B J03A
		J03B J04Z J11A
	10	K09A K09B
	11	L09A L09B
	12	M06Z M37Z
	13	N11A N11B
	14	O02A O02B
	21B	X06A X06B X06C
		X07A X07B
39.B3.22↔	01	B01A B01B B04A
		B04B B04C
	03	D12A
	04	E02A E02B
	05	F01A F01C F04Z
		F21A F21B F21C
		F28A F59A F59B
		F59C F59D F59E
		F59F F59G
	06	G12A G12B
	07	H06Z
	08	I28A I28B
	09	J02A J02B J03A
		J03B J04Z J11A
	10	K09A K09B
	11	L09A L09B
	12	M06Z M37Z
	13	N11A N11B
	14	O02A O02B
	21B	X06A X06B X06C
39.B3.23↔		BORP MBOR VAC
		VAC I VAC II VBOR
	01	B01A B01B B04A
		B04B B04C
	03	D12A

CHOP	MDC	DRG
	04	E02A E02B E36A E36B
	05	F01A F01C F04Z F21A F21B F21C F28A F59A F59B F59C F59D F59E F59F F59G
	06	G12A G12B G16A G38A G38B
	07	H06Z
	08	I28A I28B
	09	J02A J02B J03A J03B J04Z J11A
	10	K09A K09B
	11	L09A L09B
	12	M06Z M37Z
	13	N11A N11B
	14	O02A O02B
	21B	X06A X06B X06C
39.B3.25↔		BORP MBOR VAC VAC I VAC II VBOR
	01	B01A B01B B04A B04B B04C
	03	D12A
	04	E02A E02B E36A E36B
	05	F01A F01C F04Z F21A F21B F21C F28A F59A F59B F59C F59D F59E F59F F59G
	06	G12A G12B G16A G38A G38B
	07	H06Z
	08	I28A I28B
	09	J02A J02B J03A J03B J04Z J11A
	10	K09A K09B
	11	L09A L09B
	12	M06Z M37Z
	13	N11A N11B
	14	O02A O02B
	21B	X06A X06B X06C
39.B3.26↔		BORP MBOR VAC VAC I VAC II VBOR
	01	B01A B01B B04A B04B B04C
	03	D12A
	04	E02A E02B E36A E36B
	05	F01A F01C F04Z F21A F21B F21C F28A F59A F59B F59C F59D F59E F59F F59G
	06	G12A G12B G16A G38A G38B
	07	H06Z
	08	I28A I28B
	09	J02A J02B J03A J03B J04Z J11A
	10	K09A K09B
	11	L09A L09B
	12	M06Z M37Z
	13	N11A N11B
	14	O02A O02B
	21B	X06A X06B X06C
39.B3.27↔		BORP MBOR VAC VAC I VAC II VBOR
	01	B01A B01B B04A B04B B04C
	03	D12A
	04	E02A E02B E36A E36B
	05	F01A F01C F04Z F21A F21B F21C F28A F59A F59B F59C F59D F59E F59F F59G
	06	G12A G12B G16A G38A G38B
	07	H06Z
	08	I28A I28B
	09	J02A J02B J03A J03B J04Z J11A
	10	K09A K09B
	11	L09A L09B
	12	M06Z M37Z
	13	N11A N11B
	14	O02A O02B
	21B	X06A X06B X06C
39.B3.28↔		BORP MBOR VAC VAC I VAC II VBOR
	01	B01A B01B B04A B04B B04C
	03	D12A
	04	E02A E02B E36A E36B
	05	F01A F01C F04Z F21A F21B F21C F28A F59A F59B F59C F59D F59E F59F F59G
	06	G12A G12B G16A G38A G38B
	07	H06Z
	08	I28A I28B
	09	J02A J02B J03A J03B J04Z J11A
	10	K09A K09B
	11	L09A L09B
	12	M06Z M37Z
	13	N11A N11B
	14	O02A O02B
	21B	X06A X06B X06C
39.B3.31↔		BORP MBOR VAC VAC I VAC II VBOR
	03	D12A
	04	E02A E02B E36A E36B
	05	F01A F01C F04Z F21A F21B F21C F28A F59A F59B F59C F59D F59E F59F
	06	G12A G12B G16A G38A G38B
	07	H06Z
	08	I28A I28B
	09	J02A J02B J03A J03B J04Z J11A
	10	K09A K09B
	11	L09A L09B
	12	M06Z M37Z
	13	N11A N11B
	14	O02A O02B
	21B	X05Z X06A X06B X06C
39.B3.51↔		BORP MBOR VAC VAC I VAC II VBOR
	03	D12A
	04	E02A E02B E36A E36B
	05	F01A F01C F04Z F21A F21B F21C F28A F59A F59B F59C F59D F59E F59F
	06	G12A G12B G16A G38A G38B
	07	H06Z
	08	I28A I28B
	09	J02A J02B J03A J03B J04Z J11A
	10	K09A K09B
	11	L09A L09B
	12	M06Z M37Z
	13	N11A N11B
	14	O02A O02B
	21B	X05Z X06A X06B X06C
39.B3.75↔		BORP MBOR VAC VAC I VAC II VBOR
	04	E36A E36B
	05	F01A F01C F12A F24A F24B F24C F24D F50A F50B F59D F59E
	06	G12A G16A G38A G38B
39.B3.81↔		BORP MBOR VAC VAC I VAC II VBOR
	03	D12A
	04	E02A E02B E36A E36B
	05	F01A F01C F04Z F21A F21B F21C F28A F59A F59B F59C F59D F59E F59F
	06	G12A G12B G16A G38A G38B
	07	H06Z
	08	I28A I28B
	09	J02A J02B J03A J03B J04Z J11A
	10	K09A K09B
	11	L09A L09B
	12	M06Z M37Z
	13	N11A N11B
	14	O02A O02B
	21B	X05Z X06A X06B X06C
39.B3.C1↔		BORP MBOR VAC VAC I VAC II VBOR
	03	D12A
	04	E02A E02B E36A E36B
	05	F01A F01C F04Z F21A F21B F21C F28A F59A F59B F59C F59D F59E F59F
	06	G12A G12B G16A G38A G38B
	07	H06Z
	08	I28A I28B
	09	J02A J02B J03A J03B J04Z J11A
	10	K09A K09B

PROC

PROC

CHOP	MDC	DRG
	11	L09A L09B
	12	M06Z M37Z
	13	N11A N11B
	14	O02A O02B
	21B	X06A X06B X06C
39.B3.C3↔		BORP MBOR VAC VAC I VAC II VBOR
	03	D12A
	04	E02A E02B E36A E36B
	05	F01A F01C F04Z F21A F21B F21C F28A F59A F59B F59C F59D F59E F59F
	06	G12A G12B G16A G38A G38B
	07	H06Z
	08	I28A I28B
	09	J02A J02B J03A J03B J04Z J11A
	10	K09A K09B
	11	L09A L09B
	12	M06Z M37Z
	13	N11A N11B
	14	O02A O02B
	21B	X06A X06B X06C
39.B3.D1↔		BORP MBOR VAC VAC I VAC II VBOR
	03	D12A
	04	E02A E02B E36A E36B
	05	F01A F01C F04Z F21A F21B F21C F28A F59A F59B F59C F59D F59E F59F
	06	G12A G12B G16A G38A G38B
	07	H06Z
	08	I28A I28B
	09	J02A J02B J03A J03B J04Z J11A
	10	K09A K09B
	11	L09A L09B
	12	M06Z M37Z
	13	N11A N11B
	14	O02A O02B
	21B	X06A X06B X06C
39.B3.G1↔		BORP MBOR VAC VAC I VAC II VBOR
	03	D12A
	04	E02A E02B E36A E36B
	05	F01A F01C F04Z F21A F21B F21C F28A F59A F59B F59C F59D F59E F59F
	06	G12A G12B G16A G38A G38B
	07	H06Z
	08	I28A I28B
	09	J02A J02B J03A J03B J04Z J11A
	10	K09A K09B
	11	L09A L09B
	12	M06Z M37Z
	13	N11A N11B
	14	O02A O02B
	21B	X05Z X06A X06B X06C
39.B3.H1↔		BORP MBOR VAC VAC I VAC II VBOR
	03	D12A
	04	E02A E02B E36A E36B
	05	F01A F01C F04Z F21A F21B F21C F28A F59A F59B F59C F59D F59E F59F
	06	G12A G12B G16A G38A G38B
	07	H06Z
	08	I28A I28B
	09	J02A J02B J03A J03B J04Z J11A
	10	K09A K09B
	11	L09A L09B
	12	M06Z M37Z
	13	N11A N11B
	14	O02A O02B
	21B	X05Z X06A X06B X06C
39.B3.J7↔		BORP MBOR VAC VAC I VAC II VBOR
	03	D12A
	04	E02A E02B E36A E36B
	05	F01A F01C F04Z F21A F21B F21C F28A F59A F59B F59C F59D F59E F59F F59G
	06	G12A G12B G16A G38A G38B
	07	H06Z
	08	I28A I28B
	09	J02A J02B J03A J03B J04Z J11A
	10	K09A K09B
	11	L09A L09B
	12	M06Z M37Z
	13	N11A N11B
	14	O02A O02B
	21B	X05Z X06A X06B X06C
39.B3.JB↔		BORP MBOR VAC VAC I VAC II VBOR
	03	D12A
	04	E02A E02B E36A E36B
	05	F01A F01C F04Z F21A F21B F21C F28A F59A F59B F59C F59D F59E F59F
	06	G12A G12B G16A G38A G38B
	07	H06Z
	08	I28A I28B
	09	J02A J02B J03A J03B J04Z J11A
	10	K09A K09B
	11	L09A L09B
	12	M06Z M37Z
	13	N11A N11B
	14	O02A O02B
	21B	X05Z X06A X06B X06C
39.B3.JF↔		BORP MBOR VAC VAC I VAC II VBOR
	03	D12A
	04	E02A E02B E36A E36B
	05	F01A F01C F04Z F21A F21B F21C F28A F59A F59B F59C F59D F59E F59F
	06	G12A G12B G16A G38A G38B
	07	H06Z
	08	I28A I28B
	09	J02A J02B J03A J03B J04Z J11A
	10	K09A K09B
	11	L09A L09B
	12	M06Z M37Z
	13	N11A N11B
	14	O02A O02B
	21B	X05Z X06A X06B X06C
39.B3.JI↔		BORP MBOR VAC VAC I VAC II VBOR
	03	D12A
	04	E02A E02B E36A E36B
	05	F01A F01C F04Z F21A F21B F21C F28A F59A F59B F59C F59D F59E F59F F59G
	06	G12A G12B G16A G38A G38B
	07	H06Z
	08	I28A I28B
	09	J02A J02B J03A J03B J04Z J11A
	10	K09A K09B
	11	L09A L09B
	12	M06Z M37Z
	13	N11A N11B
	14	O02A O02B
	21B	X06A X06B X06C
39.B3.L1↔		BORP KORP MBOR MKOR VAC VAC I VAC II VBOR VKOR
	01	B01A B01B B02A B02B B04A B04B B04C B20A B20B B20C
	03	D12A
	04	E02A E02B E36A E36B
	05	F01A F01C F04Z F21A F21B F21C F28A F59A F59B F59C F59D F59E F59F F59G
	06	G12A G12B G16A G38A G38B
	07	H06Z
	08	I28A I28B
	09	J11A
	10	K09A K09B
	11	L09A L09B
	12	M06Z M37Z
	13	N11A N11B N25A N25B

CHOP	MDC	DRG
	14	O02A O02B
	21B	X06A X06B X06C
39.B4.09↔	03	D12A
	04	E02A E02B
	05	F01A F01C F04Z F21A F21B F21C F28A F59A F59B F59C F59D F59E F59F
	06	G12A G12B
	07	H06Z
	08	I28A I28B
	09	J02A J02B J03A J03B J04Z J11A
	10	K09A K09B
	11	L09A L09B
	12	M06Z M37Z
	13	N11A N11B
	14	O02A O02B
	21B	X05Z X06A X06B X06C
39.B4.11↔		BORP KORP MBOR MKOR VAC VAC I VAC II VBOR VKOR
	01	B01A B01B B02A B02B B09A B09B B09C B09D B20A B20B B20C
	03	D12A
	04	E02A E02B E36A E36B
	05	F01A F01C F04Z F21A F21B F21C F28A F59A F59B F59C F59D F59E F59F F59G
	06	G12A G12B G16A G38A G38B
	07	H06Z
	08	I28A I28B
	09	J02A J02B J03A J03B J04Z J11A
	10	K09A K09B
	11	L09A L09B
	12	M06Z M37Z
	13	N11A N11B
	14	O02A O02B
	21B	X06A X06B X06C X07A X07B
39.B4.22↔	01	B01A B01B B04A B04B B04C
	03	D12A
	04	E02A E02B
	05	F01A F01C F04Z F21A F21B F21C F28A F59A F59B F59C F59D F59E F59F F59G
	06	G12A G12B
	07	H06Z
	08	I28A I28B
	09	J02A J02B J03A J03B J04Z J11A
	10	K09A K09B
	11	L09A L09B
	12	M06Z M37Z
	13	N11A N11B
	14	O02A O02B
	21B	X06A X06B X06C
39.B4.23↔		BORP MBOR VAC VAC I VAC II VBOR
	01	B01A B01B B04A B04B B04C
	03	D12A
	04	E02A E02B E36A E36B
	05	F01A F01C F04Z F21A F21B F21C F28A F59A F59B F59C F59D F59E F59F F59G
	06	G12A G12B G16A G38A G38B
	07	H06Z
	08	I28A I28B
	09	J02A J02B J03A J03B J04Z J11A
	10	K09A K09B
	11	L09A L09B
	12	M06Z M37Z
	13	N11A N11B
	14	O02A O02B
	21B	X06A X06B X06C
39.B4.25↔		BORP MBOR VAC VAC I VAC II VBOR
	01	B01A B01B B04A B04B B04C
	03	D12A
	04	E02A E02B E36A E36B
	05	F01A F01C F04Z F21A F21B F21C F28A F59A F59B F59C F59D F59E F59F F59G
	06	G12A G12B G16A G38A G38B
	07	H06Z
	08	I28A I28B
	09	J02A J02B J03A J03B J04Z J11A
	10	K09A K09B
	11	L09A L09B
	12	M06Z M37Z
	13	N11A N11B
	14	O02A O02B
	21B	X06A X06B X06C
39.B4.26↔		BORP MBOR VAC VAC I VAC II VBOR
	01	B01A B01B B04A B04B B04C
	03	D12A
	04	E02A E02B E36A E36B
	05	F01A F01C F04Z F21A F21B F21C F28A F59A F59B F59C F59D F59E F59F F59G
	06	G12A G12B G16A G38A G38B
	07	H06Z
	08	I28A I28B
	09	J02A J02B J03A J03B J04Z J11A
	10	K09A K09B
	11	L09A L09B
	12	M06Z M37Z
	13	N11A N11B
	14	O02A O02B
	21B	X06A X06B X06C
39.B4.27↔		BORP MBOR VAC VAC I VAC II VBOR
	01	B01A B01B B04A B04B B04C
	03	D12A
	04	E02A E02B E36A E36B
	05	F01A F01C F04Z F21A F21B F21C F28A F59A F59B F59C F59D F59E F59F F59G
	06	G12A G12B G16A G38A G38B
	07	H06Z
	08	I28A I28B
	09	J02A J02B J03A J03B J04Z J11A
	10	K09A K09B
	11	L09A L09B
	12	M06Z M37Z
	13	N11A N11B
	14	O02A O02B
	21B	X06A X06B X06C
39.B4.28↔		BORP MBOR VAC VAC I VAC II VBOR
	01	B01A B01B B04A B04B B04C
	03	D12A
	04	E02A E02B E36A E36B
	05	F01A F01C F04Z F21A F21B F21C F28A F59A F59B F59C F59D F59E F59F F59G
	06	G12A G12B G16A G38A G38B
	07	H06Z
	08	I28A I28B
	09	J02A J02B J03A J03B J04Z J11A
	10	K09A K09B
	11	L09A L09B
	12	M06Z M37Z
	13	N11A N11B
	14	O02A O02B
	21B	X06A X06B X06C
39.B4.31↔		BORP MBOR VAC VAC I VAC II VBOR
	03	D12A
	04	E02A E02B E36A E36B
	05	F01A F01C F04Z F21A F21B F21C F28A F59A F59B F59C F59D F59E F59F
	06	G12A G12B G16A G38A G38B
	07	H06Z
	08	I28A I28B
	09	J02A J02B J03A J03B J04Z J11A
	10	K09A K09B
	11	L09A L09B
	12	M06Z M37Z
	13	N11A N11B
	14	O02A O02B

PROC

PROC

CHOP	MDC	DRG
	21B	X05Z X06A X06B X06C
39.B4.51↔		BORP MBOR VAC VAC I VAC II VBOR
	03	D12A
	04	E02A E02B E36A E36B
	05	F01A F01C F04Z F21A F21B F21C F28A F59A F59B F59C F59D F59E F59F
	06	G12A G12B G16A G38A G38B
	07	H06Z
	08	I28A I28B
	09	J02A J02B J03A J03B J04Z J11A
	10	K09A K09B
	11	L09A L09B
	12	M06Z M37Z
	13	N11A N11B
	14	O02A O02B
	21B	X05Z X06A X06B X06C
39.B4.75↔		BORP MBOR VAC VAC I VAC II VBOR
	04	E36A E36B
	05	F01A F01C F12A F24A F24B F24C F24D F50A F50B F59D F59E
	06	G12A G16A G38A G38B
39.B4.81↔		BORP MBOR VAC VAC I VAC II VBOR
	03	D12A
	04	E02A E02B E36A E36B
	05	F01A F01C F04Z F21A F21B F21C F28A F59A F59B F59C F59D F59E F59F
	06	G12A G12B G16A G38A G38B
	07	H06Z
	08	I28A I28B
	09	J02A J02B J03A J03B J04Z J11A
	10	K09A K09B
	11	L09A L09B
	12	M06Z M37Z
	13	N11A N11B
	14	O02A O02B
	21B	X05Z X06A X06B X06C
39.B4.C1↔		BORP MBOR VAC VAC I VAC II VBOR
	03	D12A
	04	E02A E02B E36A E36B
	05	F01A F01C F04Z F21A F21B F21C F28A F59A F59B F59C F59D F59E F59F
	06	G12A G12B G16A G38A G38B
	07	H06Z
	08	I28A I28B
	09	J02A J02B J03A J03B J04Z J11A
	10	K09A K09B
	11	L09A L09B
	12	M06Z M37Z
	13	N11A N11B
	14	O02A O02B
	21B	X06A X06B X06C
39.B4.C3↔		BORP MBOR VAC VAC I VAC II VBOR
	03	D12A
	04	E02A E02B E36A E36B
	05	F01A F01C F04Z F21A F21B F21C F28A F59A F59B F59C F59D F59E F59F
	06	G12A G12B G16A G38A G38B
	07	H06Z
	08	I28A I28B
	09	J02A J02B J03A J03B J04Z J11A
	10	K09A K09B
	11	L09A L09B
	12	M06Z M37Z
	13	N11A N11B
	14	O02A O02B
	21B	X06A X06B X06C
39.B4.D1↔		BORP MBOR VAC VAC I VAC II VBOR
	03	D12A
	04	E02A E02B E36A E36B
	05	F01A F01C F04Z F21A F21B F21C F28A F59A F59B F59C F59D F59E F59F
	06	G12A G12B G16A G38A G38B
	07	H06Z
	08	I28A I28B
	09	J02A J02B J03A J03B J04Z J11A
	10	K09A K09B
	11	L09A L09B
	12	M06Z M37Z
	13	N11A N11B
	14	O02A O02B
	21B	X06A X06B X06C
39.B4.G1↔		BORP MBOR VAC VAC I VAC II VBOR
	03	D12A
	04	E02A E02B E36A E36B
	05	F01A F01C F04Z F21A F21B F21C F28A F59A F59B F59C F59D F59E F59F
	06	G12A G12B G16A G38A G38B
	07	H06Z
	08	I28A I28B
	09	J02A J02B J03A J03B J04Z J11A
	10	K09A K09B
	11	L09A L09B
	12	M06Z M37Z
	13	N11A N11B
	14	O02A O02B
	21B	X05Z X06A X06B X06C
39.B4.H1↔		BORP MBOR VAC VAC I VAC II VBOR
	03	D12A
	04	E02A E02B E36A E36B
	05	F01A F01C F04Z F21A F21B F21C F28A F59A F59B F59C F59D F59E F59F
	06	G12A G12B G16A G38A G38B
	07	H06Z
	08	I28A I28B
	09	J02A J02B J03A J03B J04Z J11A
	10	K09A K09B
	11	L09A L09B
	12	M06Z M37Z
	13	N11A N11B
	14	O02A O02B
	21B	X05Z X06A X06B X06C
39.B4.J7↔		BORP MBOR VAC VAC I VAC II VBOR
	03	D12A
	04	E02A E02B E36A E36B
	05	F01A F01C F04Z F21A F21B F21C F28A F59A F59B F59C F59D F59E F59F F59G
	06	G12A G12B G16A G38A G38B
	07	H06Z
	08	I28A I28B
	09	J02A J02B J03A J03B J04Z J11A
	10	K09A K09B
	11	L09A L09B
	12	M06Z M37Z
	13	N11A N11B
	14	O02A O02B
	21B	X06A X06B X06C
39.B4.JB↔		BORP MBOR VAC VAC I VAC II VBOR
	03	D12A
	04	E02A E02B E36A E36B
	05	F01A F01C F04Z F21A F21B F21C F28A F59A F59B F59C F59D F59E F59F
	06	G12A G12B G16A G38A G38B
	07	H06Z
	08	I28A I28B
	09	J02A J02B J03A J03B J04Z J11A
	10	K09A K09B
	11	L09A L09B
	12	M06Z M37Z

CHOP	MDC	DRG
	13	N11A N11B
	14	O02A O02B
	21B	X05Z X06A X06B X06C
39.B4.JF↔		BORP MBOR VAC VAC I VAC II VBOR
	03	D12A
	04	E02A E02B E36A E36B
	05	F01A F01C F04Z F21A F21B F21C F28A F59A F59B F59C F59D F59E F59F
	06	G12A G12B G16A G38A G38B
	07	H06Z
	08	I28A I28B
	09	J02A J02B J03A J03B J04Z J11A
	10	K09A K09B
	11	L09A L09B
	12	M06Z M37Z
	13	N11A N11B
	14	O02A O02B
	21B	X05Z X06A X06B X06C
39.B4.JI↔		BORP MBOR VAC VAC I VAC II VBOR
	03	D12A
	04	E02A E02B E36A E36B
	05	F01A F01C F04Z F21A F21B F21C F28A F59A F59B F59C F59D F59E F59F F59G
	06	G12A G12B G16A G38A G38B
	07	H06Z
	08	I28A I28B
	09	J02A J02B J03A J03B J04Z J11A
	10	K09A K09B
	11	L09A L09B
	12	M06Z M37Z
	13	N11A N11B
	14	O02A O02B
	21B	X06A X06B X06C
39.B4.L1↔		BORP KORP MBOR MKOR VAC VAC I VAC II VBOR VKOR
	01	B01A B01B B02A B02B B04A B04B B04C B20A B20B B20C
	03	D12A
	04	E02A E02B E36A E36B
	05	F01A F01C F04Z F21A F21B F21C F28A F59A F59B F59C F59D F59E F59F F59G
	06	G12A G12B G16A G38A G38B
	07	H06Z
	08	I28A I28B
	09	J11A
	10	K09A K09B

CHOP	MDC	DRG
	11	L09A L09B
	12	M06Z M37Z
	13	N11A N11B N25A N25B
	14	O02A O02B
	21B	X06A X06B X06C
39.B5.09↔	03	D12A
	04	E02A E02B
	05	F01A F01C F04Z F21A F21B F21C F28A F59A F59B F59C F59D F59E F59F
	06	G12A G12B
	07	H06Z
	08	I28A I28B
	09	J02A J02B J03A J03B J04Z J11A
	10	K09A K09B
	11	L09A L09B
	12	M06Z M37Z
	13	N11A N11B
	14	O02A O02B
	21B	X05Z X06A X06B X06C
39.B5.11↔		BORP KORP MBOR MKOR VAC VAC I VAC II VBOR VKOR
	01	B01A B01B B02A B02B B09A B09B B09C B09D B20A B20B B20C
	03	D12A
	04	E02A E02B E36A E36B
	05	F01A F01C F04Z F21A F21B F21C F28A F59A F59B F59C F59D F59E F59F F59G
	06	G12A G12B G16A G38A G38B
	07	H06Z
	08	I28A I28B
	09	J02A J02B J03A J03B J04Z J11A
	10	K09A K09B
	11	L09A L09B
	12	M06Z M37Z
	13	N11A N11B
	14	O02A O02B
	21B	X06A X06B X06C X07A X07B
39.B5.22↔	01	B01A B01B B04A B04B B04C
	03	D12A
	04	E02A E02B
	05	F01A F01C F04Z F21A F21B F21C F28A F59A F59B F59C F59D F59E F59F F59G
	06	G12A G12B
	07	H06Z
	08	I28A I28B
	09	J02A J02B J03A J03B J04Z J11A
	10	K09A K09B
	11	L09A L09B
	12	M06Z M37Z

CHOP	MDC	DRG
	13	N11A N11B
	14	O02A O02B
	21B	X06A X06B X06C
39.B5.23↔		BORP MBOR VAC VAC I VAC II VBOR
	01	B01A B01B B04A B04B B04C
	03	D12A
	04	E02A E02B E36A E36B
	05	F01A F01C F04Z F21A F21B F21C F28A F59A F59B F59C F59D F59E F59F F59G
	06	G12A G12B G16A G38A G38B
	07	H06Z
	08	I28A I28B
	09	J02A J02B J03A J03B J04Z J11A
	10	K09A K09B
	11	L09A L09B
	12	M06Z M37Z
	13	N11A N11B
	14	O02A O02B
	21B	X06A X06B X06C
39.B5.25↔		BORP MBOR VAC VAC I VAC II VBOR
	01	B01A B01B B04A B04B B04C
	03	D12A
	04	E02A E02B E36A E36B
	05	F01A F01C F04Z F21A F21B F21C F28A F59A F59B F59C F59D F59E F59F F59G
	06	G12A G12B G16A G38A G38B
	07	H06Z
	08	I28A I28B
	09	J02A J02B J03A J03B J04Z J11A
	10	K09A K09B
	11	L09A L09B
	12	M06Z M37Z
	13	N11A N11B
	14	O02A O02B
	21B	X06A X06B X06C
39.B5.26↔		BORP MBOR VAC VAC I VAC II VBOR
	01	B01A B01B B04A B04B B04C
	03	D12A
	04	E02A E02B E36A E36B
	05	F01A F01C F04Z F21A F21B F21C F28A F59A F59B F59C F59D F59E F59F F59G
	06	G12A G12B G16A G38A G38B
	07	H06Z
	08	I28A I28B
	09	J02A J02B J03A J03B J04Z J11A
	10	K09A K09B

PROC

PROC

CHOP	MDC	DRG
	11	L09A L09B
	12	M06Z M37Z
	13	N11A N11B
	14	O02A O02B
	21B	X06A X06B X06C
39.B5.27↔		BORP MBOR VAC VAC I VAC II VBOR
	01	B01A B01B B04A B04B B04C
	03	D12A
	04	E02A E02B E36A E36B
	05	F01A F01C F04Z F21A F21B F21C F28A F59A F59B F59C F59D F59E F59F F59G
	06	G12A G12B G16A G38A G38B
	07	H06Z
	08	I28A I28B
	09	J02A J02B J03A J03B J04Z J11A
	10	K09A K09B
	11	L09A L09B
	12	M06Z M37Z
	13	N11A N11B
	14	O02A O02B
	21B	X06A X06B X06C
39.B5.31↔		BORP MBOR VAC VAC I VAC II VBOR
	03	D12A
	04	E02A E02B E36A E36B
	05	F01A F01C F04Z F21A F21B F21C F28A F59A F59B F59C F59D F59E F59F
	06	G12A G12B G16A G38A G38B
	07	H06Z
	08	I28A I28B
	09	J02A J02B J03A J03B J04Z J11A
	10	K09A K09B
	11	L09A L09B
	12	M06Z M37Z
	13	N11A N11B
	14	O02A O02B
	21B	X05Z X06A X06B X06C
39.B5.51↔		BORP MBOR VAC VAC I VAC II VBOR
	03	D12A
	04	E02A E02B E36A E36B
	05	F01A F01C F04Z F21A F21B F21C F28A F59A F59B F59C F59D F59E F59F
	06	G12A G12B G16A G38A G38B
	07	H06Z
	08	I28A I28B
	09	J02A J02B J03A J03B J04Z J11A
	10	K09A K09B
	11	L09A L09B
	12	M06Z M37Z
	13	N11A N11B
	14	O02A O02B
	21B	X06A X06B X06C
39.B5.71↔		BORP MBOR VAC VAC I VAC II VBOR
	03	D12A
	04	E02A E02B E36A E36B
	05	F01A F01C F04Z F21A F21B F21C F28A F59A F59B F59C F59D F59E F59F F59G
	06	G12A G12B G16A G38A G38B
	07	H06Z
	08	I28A I28B
	09	J02A J02B J03A J03B J04Z J11A
	10	K09A K09B
	11	L09A L09B
	12	M06Z M37Z
	13	N11A N11B
	14	O02A O02B
	21B	X06A X06B X06C
39.B5.74↔		BORP MBOR VAC VAC I VAC II VBOR
	03	D12A
	04	E02A E02B E36A E36B
	05	F01A F01C F04Z F21A F21B F21C F28A F59A F59B F59C F59D F59E F59F F59G
	06	G12A G12B G16A G38A G38B
	07	H06Z
	08	I28A I28B
	09	J02A J02B J03A J03B J04Z J11A
	10	K09A K09B
	11	L09A L09B
	12	M06Z M37Z
	13	N11A N11B
	14	O02A O02B
	21B	X06A X06B X06C
39.B5.75↔		BORP MBOR VAC VAC I VAC II VBOR
	04	E36A E36B
	05	F01A F01C F12A F24A F24B F24C F24D F50A F50B F59D F59E
	06	G12A G16A G38A G38B
39.B5.81↔		BORP MBOR VAC VAC I VAC II VBOR
	03	D12A
	04	E02A E02B E36A E36B
	05	F01A F01C F04Z F21A F21B F21C F28A F59A F59B F59C F59D F59E F59F
	06	G12A G12B G16A G38A G38B
	07	H06Z
	08	I28A I28B
	09	J02A J02B J03A J03B J04Z J11A
	10	K09A K09B
	11	L09A L09B
	12	M06Z M37Z
	13	N11A N11B
	14	O02A O02B
	21B	X05Z X06A X06B X06C
39.B5.C1↔		BORP MBOR VAC VAC I VAC II VBOR
	03	D12A
	04	E02A E02B E36A E36B
	05	F01A F01C F04Z F21A F21B F21C F28A F59A F59B F59C F59D F59E F59F
	06	G12A G12B G16A G38A G38B
	07	H06Z
	08	I28A I28B
	09	J02A J02B J03A J03B J04Z J11A
	10	K09A K09B
	11	L09A L09B
	12	M06Z M37Z
	13	N11A N11B
	14	O02A O02B
	21B	X06A X06B X06C
39.B5.C3↔		BORP MBOR VAC VAC I VAC II VBOR
	03	D12A
	04	E02A E02B E36A E36B
	05	F01A F01C F04Z F21A F21B F21C F28A F59A F59B F59C F59D F59E F59F
	06	G12A G12B G16A G38A G38B
	07	H06Z
	08	I28A I28B
	09	J02A J02B J03A J03B J04Z J11A
	10	K09A K09B
	11	L09A L09B
	12	M06Z M37Z
	13	N11A N11B
	14	O02A O02B
	21B	X06A X06B X06C
39.B5.D1↔		BORP MBOR VAC VAC I VAC II VBOR
	03	D12A
	04	E02A E02B E36A E36B
	05	F01A F01C F04Z F21A F21B F21C F28A F59A F59B F59C F59D F59E F59F
	06	G12A G12B G16A G38A G38B
	07	H06Z
	08	I28A I28B
	09	J02A J02B J03A

CHOP	MDC	DRG
		J03B J04Z J11A
	10	K09A K09B
	11	L09A L09B
	12	M06Z M37Z
	13	N11A N11B
	14	O02A O02B
	21B	X06A X06B X06C
39.B5.G1↔		BORP MBOR VAC
		VAC I VAC II VBOR
	03	D12A
	04	E02A E02B E36A
		E36B
	05	F01A F01C F04Z
		F21A F21B F21C
		F28A F59A F59B
		F59C F59D F59E
		F59F
	06	G12A G12B G16A
		G38A G38B
	07	H06Z
	08	I28A I28B
	09	J02A J02B J03A
		J03B J04Z J11A
	10	K09A K09B
	11	L09A L09B
	12	M06Z M37Z
	13	N11A N11B
	14	O02A O02B
	21B	X05Z X06A X06B
		X06C
39.B5.H1↔		BORP MBOR VAC
		VAC I VAC II VBOR
	03	D12A
	04	E02A E02B E36A
		E36B
	05	F01A F01C F04Z
		F21A F21B F21C
		F28A F59A F59B
		F59C F59D F59E
		F59F
	06	G12A G12B G16A
		G38A G38B
	07	H06Z
	08	I28A I28B
	09	J02A J02B J03A
		J03B J04Z J11A
	10	K09A K09B
	11	L09A L09B
	12	M06Z M37Z
	13	N11A N11B
	14	O02A O02B
	21B	X05Z X06A X06B
		X06C
39.B5.J7↔		BORP MBOR VAC
		VAC I VAC II VBOR
	03	D12A
	04	E02A E02B E36A
		E36B
	05	F01A F01C F04Z
		F21A F21B F21C
		F28A F59A F59B
		F59C F59D F59E
		F59F F59G
	06	G12A G12B G16A
		G38A G38B
	07	H06Z
	08	I28A I28B
	09	J02A J02B J03A
		J03B J04Z J11A
	10	K09A K09B
	11	L09A L09B
	12	M06Z M37Z
	13	N11A N11B
	14	O02A O02B
	21B	X05Z X06A X06B
		X06C
39.B5.JB↔		BORP MBOR VAC
		VAC I VAC II VBOR
	03	D12A
	04	E02A E02B E36A
		E36B
	05	F01A F01C F04Z
		F21A F21B F21C
		F28A F59A F59B
		F59C F59D F59E
		F59F
	06	G12A G12B G16A
		G38A G38B
	07	H06Z
	08	I28A I28B
	09	J02A J02B J03A
		J03B J04Z J11A
	10	K09A K09B
	11	L09A L09B
	12	M06Z M37Z
	13	N11A N11B
	14	O02A O02B
	21B	X05Z X06A X06B
		X06C
39.B5.JF↔		BORP MBOR VAC
		VAC I VAC II VBOR
	03	D12A
	04	E02A E02B E36A
		E36B
	05	F01A F01C F04Z
		F21A F21B F21C
		F28A F59A F59B
		F59C F59D F59E
		F59F
	06	G12A G12B G16A
		G38A G38B
	07	H06Z
	08	I28A I28B
	09	J02A J02B J03A
		J03B J04Z J11A
	10	K09A K09B
	11	L09A L09B
	12	M06Z M37Z
	13	N11A N11B
	14	O02A O02B
	21B	X05Z X06A X06B
		X06C
39.B5.JI↔		BORP MBOR VAC
		VAC I VAC II VBOR
	03	D12A
	04	E02A E02B E36A
		E36B
	05	F01A F01C F04Z
		F21A F21B F21C
		F28A F59A F59B
		F59C F59D F59E
		F59F F59G
	06	G12A G12B G16A
		G38A G38B
	07	H06Z
	08	I28A I28B
	09	J02A J02B J03A
		J03B J04Z J11A
	10	K09A K09B
	11	L09A L09B
	12	M06Z M37Z
	13	N11A N11B
	14	O02A O02B
	21B	X06A X06B X06C
39.B5.L1↔		BORP KORP MBOR
		MKOR VAC VAC I
		VAC II VBOR VKOR
	01	B01A B01B B02A
		B02B B04A B04B
		B04C B20A B20B
		B20C
	03	D12A
	04	E02A E02B E36A
		E36B
	05	F01A F01C F04Z
		F21A F21B F21C
		F28A F59A F59B
		F59C F59D F59E
		F59F F59G
	06	G12A G12B G16A
		G38A G38B
	07	H06Z
	08	I28A I28B
	09	J11A
	10	K09A K09B
	11	L09A L09B
	12	M06Z M37Z
	13	N11A N11B N25A
		N25B
	14	O02A O02B
	21B	X06A X06B X06C
39.B6.09↔	03	D12A
	04	E02A E02B
	05	F01A F01C F04Z
		F21A F21B F21C
		F28A F59A F59B
		F59C F59D F59E
		F59F
	06	G12A G12B
	07	H06Z
	08	I28A I28B
	09	J02A J02B J03A
		J03B J04Z J11A
	10	K09A K09B
	11	L09A L09B
	12	M06Z M37Z
	13	N11A N11B
	14	O02A O02B
	21B	X05Z X06A X06B
		X06C
39.B6.11↔		BORP KORP MBOR
		MKOR VAC VAC I
		VAC II VBOR VKOR
	01	B01A B01B B02A
		B02B B09A B09B
		B09C B09D B20A
		B20B B20C
	03	D12A
	04	E02A E02B E36A
		E36B
	05	F01A F01C F04Z
		F21A F21B F21C
		F28A F59A F59B
		F59C F59D F59E
		F59F F59G
	06	G12A G12B G16A
		G38A G38B
	07	H06Z
	08	I28A I28B
	09	J02A J02B J03A
		J03B J04Z J11A

PROC

PROC

CHOP	MDC	DRG
	10	K09A K09B
	11	L09A L09B
	12	M06Z M37Z
	13	N11A N11B
	14	O02A O02B
	21B	X06A X06B X06C X07A X07B
39.B6.22↔	01	B01A B01B B04A B04B B04C
	03	D12A
	04	E02A E02B
	05	F01A F01C F04Z F21A F21B F21C F28A F59A F59B F59C F59D F59E F59F F59G
	06	G12A G12B
	07	H06Z
	08	I28A I28B
	09	J02A J02B J03A J03B J04Z J11A
	10	K09A K09B
	11	L09A L09B
	12	M06Z M37Z
	13	N11A N11B
	14	O02A O02B
	21B	X06A X06B X06C
39.B6.23↔		BORP MBOR VAC VAC I VAC II VBOR
	01	B01A B01B B04A B04B B04C
	03	D12A
	04	E02A E02B E36A E36B
	05	F01A F01C F04Z F21A F21B F21C F28A F59A F59B F59C F59D F59E F59F F59G
	06	G12A G12B G16A G38A G38B
	07	H06Z
	08	I28A I28B
	09	J02A J02B J03A J03B J04Z J11A
	10	K09A K09B
	11	L09A L09B
	12	M06Z M37Z
	13	N11A N11B
	14	O02A O02B
	21B	X06A X06B X06C
39.B6.25↔		BORP MBOR VAC VAC I VAC II VBOR
	01	B01A B01B B04A B04B B04C
	03	D12A
	04	E02A E02B E36A E36B
	05	F01A F01C F04Z F21A F21B F21C F28A F59A F59B F59C F59D F59E F59F F59G
	06	G12A G12B G16A G38A G38B
	07	H06Z
	08	I28A I28B
	09	J02A J02B J03A J03B J04Z J11A
	10	K09A K09B
	11	L09A L09B
	12	M06Z M37Z
	13	N11A N11B
	14	O02A O02B
	21B	X06A X06B X06C
39.B6.26↔		BORP MBOR VAC VAC I VAC II VBOR
	01	B01A B01B B04A B04B B04C
	03	D12A
	04	E02A E02B E36A E36B
	05	F01A F01C F04Z F21A F21B F21C F28A F59A F59B F59C F59D F59E F59F F59G
	06	G12A G12B G16A G38A G38B
	07	H06Z
	08	I28A I28B
	09	J02A J02B J03A J03B J04Z J11A
	10	K09A K09B
	11	L09A L09B
	12	M06Z M37Z
	13	N11A N11B
	14	O02A O02B
	21B	X06A X06B X06C
39.B6.27↔		BORP MBOR VAC VAC I VAC II VBOR
	01	B01A B01B B04A B04B B04C
	03	D12A
	04	E02A E02B E36A E36B
	05	F01A F01C F04Z F21A F21B F21C F28A F59A F59B F59C F59D F59E F59F F59G
	06	G12A G12B G16A G38A G38B
	07	H06Z
	08	I28A I28B
	09	J02A J02B J03A J03B J04Z J11A
	10	K09A K09B
	11	L09A L09B
	12	M06Z M37Z
	13	N11A N11B
	14	O02A O02B
	21B	X06A X06B X06C
39.B6.31↔		BORP MBOR VAC VAC I VAC II VBOR
	03	D12A
	04	E02A E02B E36A E36B
	05	F01A F01C F04Z F21A F21B F21C F28A F59A F59B F59C F59D F59E F59F
	06	G12A G12B G16A G38A G38B
	07	H06Z
	08	I28A I28B
	09	J02A J02B J03A J03B J04Z J11A
	10	K09A K09B
	11	L09A L09B
	12	M06Z M37Z
	13	N11A N11B
	14	O02A O02B
	21B	X05Z X06A X06B X06C
39.B6.51↔		BORP MBOR VAC VAC I VAC II VBOR
	03	D12A
	04	E02A E02B E36A E36B
	05	F01A F01C F04Z F21A F21B F21C F28A F59A F59B F59C F59D F59E F59F
	06	G12A G12B G16A G38A G38B
	07	H06Z
	08	I28A I28B
	09	J02A J02B J03A J03B J04Z J11A
	10	K09A K09B
	11	L09A L09B
	12	M06Z M37Z
	13	N11A N11B
	14	O02A O02B
	21B	X05Z X06A X06B X06C
39.B6.71↔		BORP MBOR VAC VAC I VAC II VBOR
	03	D12A
	04	E02A E02B E36A E36B
	05	F01A F01C F04Z F21A F21B F21C F28A F59A F59B F59C F59D F59E F59F F59G
	06	G12A G12B G16A G38A G38B
	07	H06Z
	08	I28A I28B
	09	J02A J02B J03A J03B J04Z J11A
	10	K09A K09B
	11	L09A L09B
	12	M06Z M37Z
	13	N11A N11B
	14	O02A O02B
	21B	X06A X06B X06C
39.B6.74↔		BORP MBOR VAC VAC I VAC II VBOR
	03	D12A
	04	E02A E02B E36A E36B
	05	F01A F01C F04Z F21A F21B F21C F28A F59A F59B F59C F59D F59E F59F F59G
	06	G12A G12B G16A G38A G38B
	07	H06Z
	08	I28A I28B
	09	J02A J02B J03A J03B J04Z J11A
	10	K09A K09B
	11	L09A L09B
	12	M06Z M37Z

CHOP	MDC	DRG
	13	N11A N11B
	14	O02A O02B
	21B	X06A X06B X06C
39.B6.75↔		BORP MBOR VAC
		VAC I VAC II VBOR
	04	E36A E36B
	05	F01A F01C F12A
		F24A F24B F24C
		F24D F50A F50B
		F59D F59E
	06	G12A G16A G38A
		G38B
39.B6.81↔		BORP MBOR VAC
		VAC I VAC II VBOR
	03	D12A
	04	E02A E02B E36A
		E36B
	05	F01A F01C F04Z
		F21A F21B F21C
		F28A F59A F59B
		F59C F59D F59E
		F59F
	06	G12A G12B G16A
		G38A G38B
	07	H06Z
	08	I28A I28B
	09	J02A J02B J03A
		J03B J04Z J11A
	10	K09A K09B
	11	L09A L09B
	12	M06Z M37Z
	13	N11A N11B
	14	O02A O02B
	21B	X05Z X06A X06B
		X06C
39.B6.C1↔		BORP MBOR VAC
		VAC I VAC II VBOR
	03	D12A
	04	E02A E02B E36A
		E36B
	05	F01A F01C F04Z
		F21A F21B F21C
		F28A F59A F59B
		F59C F59D F59E
		F59F
	06	G12A G12B G16A
		G38A G38B
	07	H06Z
	08	I28A I28B
	09	J02A J02B J03A
		J03B J04Z J11A
	10	K09A K09B
	11	L09A L09B
	12	M06Z M37Z
	13	N11A N11B
	14	O02A O02B
	21B	X06A X06B X06C
39.B6.C3↔		BORP MBOR VAC
		VAC I VAC II VBOR
	03	D12A
	04	E02A E02B E36A
		E36B
	05	F01A F01C F04Z
		F21A F21B F21C
		F28A F59A F59B
		F59C F59D F59E
		F59F
	06	G12A G12B G16A
		G38A G38B
	07	H06Z
	08	I28A I28B
	09	J02A J02B J03A
		J03B J04Z J11A
	10	K09A K09B
	11	L09A L09B
	12	M06Z M37Z
	13	N11A N11B
	14	O02A O02B
	21B	X06A X06B X06C
39.B6.D1↔		BORP MBOR VAC
		VAC I VAC II VBOR
	03	D12A
	04	E02A E02B E36A
		E36B
	05	F01A F01C F04Z
		F21A F21B F21C
		F28A F59A F59B
		F59C F59D F59E
		F59F
	06	G12A G12B G16A
		G38A G38B
	07	H06Z
	08	I28A I28B
	09	J02A J02B J03A
		J03B J04Z J11A
	10	K09A K09B
	11	L09A L09B
	12	M06Z M37Z
	13	N11A N11B
	14	O02A O02B
	21B	X06A X06B X06C
39.B6.G1↔		BORP MBOR VAC
		VAC I VAC II VBOR
	03	D12A
	04	E02A E02B E36A
		E36B
	05	F01A F01C F04Z
		F21A F21B F21C
		F28A F59A F59B
		F59C F59D F59E
		F59F
	06	G12A G12B G16A
		G38A G38B
	07	H06Z
	08	I28A I28B
	09	J02A J02B J03A
		J03B J04Z J11A
	10	K09A K09B
	11	L09A L09B
	12	M06Z M37Z
	13	N11A N11B
	14	O02A O02B
	21B	X05Z X06A X06B
		X06C
39.B6.H1↔		BORP MBOR VAC
		VAC I VAC II VBOR
	03	D12A
	04	E02A E02B E36A
		E36B
	05	F01A F01C F04Z
		F21A F21B F21C
		F28A F59A F59B
		F59C F59D F59E
		F59F
	06	G12A G12B G16A
		G38A G38B
	07	H06Z
	08	I28A I28B
	09	J02A J02B J03A
		J03B J04Z J11A
	10	K09A K09B
	11	L09A L09B
	12	M06Z M37Z
	13	N11A N11B
	14	O02A O02B
	21B	X05Z X06A X06B
		X06C
39.B6.J7↔		BORP MBOR VAC
		VAC I VAC II VBOR
	03	D12A
	04	E02A E02B E36A
		E36B
	05	F01A F01C F04Z
		F21A F21B F21C
		F28A F59A F59B
		F59C F59D F59E
		F59F F59G
	06	G12A G12B G16A
		G38A G38B
	07	H06Z
	08	I28A I28B
	09	J02A J02B J03A
		J03B J04Z J11A
	10	K09A K09B
	11	L09A L09B
	12	M06Z M37Z
	13	N11A N11B
	14	O02A O02B
	21B	X06A X06B X06C
39.B6.JB↔		BORP MBOR VAC
		VAC I VAC II VBOR
	03	D12A
	04	E02A E02B E36A
		E36B
	05	F01A F01C F04Z
		F21A F21B F21C
		F28A F59A F59B
		F59C F59D F59E
		F59F
	06	G12A G12B G16A
		G38A G38B
	07	H06Z
	08	I28A I28B
	09	J02A J02B J03A
		J03B J04Z J11A
	10	K09A K09B
	11	L09A L09B
	12	M06Z M37Z
	13	N11A N11B
	14	O02A O02B
	21B	X05Z X06A X06B
		X06C
39.B6.JF↔		BORP MBOR VAC
		VAC I VAC II VBOR
	03	D12A
	04	E02A E02B E36A
		E36B
	05	F01A F01C F04Z
		F21A F21B F21C
		F28A F59A F59B
		F59C F59D F59E
		F59F
	06	G12A G12B G16A
		G38A G38B
	07	H06Z
	08	I28A I28B
	09	J02A J02B J03A
		J03B J04Z J11A
	10	K09A K09B
	11	L09A L09B

PROC

CHOP	MDC	DRG
	12	M06Z M37Z
	13	N11A N11B
	14	O02A O02B
	21B	X05Z X06A X06B X06C
39.B6.JI↔		BORP MBOR VAC VAC I VAC II VBOR
	03	D12A
	04	E02A E02B E36A E36B
	05	F01A F01C F04Z F21A F21B F21C F28A F59A F59B F59C F59D F59E F59F F59G
	06	G12A G12B G16A G38A G38B
	07	H06Z
	08	I28A I28B
	09	J02A J02B J03A J03B J04Z J11A
	10	K09A K09B
	11	L09A L09B
	12	M06Z M37Z
	13	N11A N11B
	14	O02A O02B
	21B	X06A X06B X06C
39.B6.L1↔		BORP KORP MBOR MKOR VAC VAC I VAC II VBOR VKOR
	01	B01A B01B B02A B02B B04A B04B B04C B20A B20B B20C
	03	D12A
	04	E02A E02B E36A E36B
	05	F01A F01C F04Z F21A F21B F21C F28A F59A F59B F59C F59D F59E F59F F59G
	06	G12A G12B G16A G38A G38B
	07	H06Z
	08	I28A I28B
	09	J11A
	10	K09A K09B
	11	L09A L09B
	12	M06Z M37Z
	13	N11A N11B N25A N25B
	14	O02A O02B
	21B	X06A X06B X06C
39.B7.09↔	03	D12A
	04	E02A E02B
	05	F01A F01C F04Z F21A F21B F21C F28A F59A F59B F59C F59D F59E F59F F59G
	06	G12A G12B
	07	H06Z
	08	I28A I28B
	09	J02A J02B J03A J03B J04Z J11A
	10	K09A K09B
	11	L09A L09B
	12	M06Z M37Z
	13	N11A N11B
	14	O02A O02B
	21B	X05Z X06A X06B X06C
39.B7.11↔		BORP KORP MBOR MKOR VAC VAC I VAC II VBOR VKOR
	01	B01A B01B B02A B02B B09A B09B B09C B09D B20A B20B B20C
	03	D12A
	04	E02A E02B E36A E36B
	05	F01A F01C F04Z F21A F21B F21C F28A F59A F59B F59C F59D F59E F59F F59G
	06	G12A G12B G16A G38A G38B
	07	H06Z
	08	I28A I28B
	09	J02A J02B J03A J03B J04Z J11A
	10	K09A K09B
	11	L09A L09B
	12	M06Z M37Z
	13	N11A N11B
	14	O02A O02B
	21B	X06A X06B X06C X07A X07B
39.B7.22↔	01	B01A B01B B04A B04B B04C
	03	D12A
	04	E02A E02B
	05	F01A F01C F04Z F21A F21B F21C F28A F59A F59B F59C F59D F59E F59F F59G
	06	G12A G12B
	07	H06Z
	08	I28A I28B
	09	J02A J02B J03A J03B J04Z J11A
	10	K09A K09B
	11	L09A L09B
	12	M06Z M37Z
	13	N11A N11B
	14	O02A O02B
	21B	X06A X06B X06C
39.B7.23↔		BORP MBOR VAC VAC I VAC II VBOR
	01	B01A B01B B04A B04B B04C
	03	D12A
	04	E02A E02B E36A E36B
	05	F01A F01C F04Z F21A F21B F21C F28A F59A F59B F59C F59D F59E F59F F59G
	06	G12A G12B G16A G38A G38B
	07	H06Z
	08	I28A I28B
	09	J02A J02B J03A J03B J04Z J11A
	10	K09A K09B
	11	L09A L09B
	12	M06Z M37Z
	13	N11A N11B
	14	O02A O02B
	21B	X06A X06B X06C
39.B7.25↔		BORP MBOR VAC VAC I VAC II VBOR
	01	B01A B01B B04A B04B B04C
	03	D12A
	04	E02A E02B E36A E36B
	05	F01A F01C F04Z F21A F21B F21C F28A F59A F59B F59C F59D F59E F59F F59G
	06	G12A G12B G16A G38A G38B
	07	H06Z
	08	I28A I28B
	09	J02A J02B J03A J03B J04Z J11A
	10	K09A K09B
	11	L09A L09B
	12	M06Z M37Z
	13	N11A N11B
	14	O02A O02B
	21B	X06A X06B X06C
39.B7.26↔		BORP MBOR VAC VAC I VAC II VBOR
	01	B01A B01B B04A B04B B04C
	03	D12A
	04	E02A E02B E36A E36B
	05	F01A F01C F04Z F21A F21B F21C F28A F59A F59B F59C F59D F59E F59F F59G
	06	G12A G12B G16A G38A G38B
	07	H06Z
	08	I28A I28B
	09	J02A J02B J03A J03B J04Z J11A
	10	K09A K09B
	11	L09A L09B
	12	M06Z M37Z
	13	N11A N11B
	14	O02A O02B
	21B	X06A X06B X06C
39.B7.27↔		BORP MBOR VAC VAC I VAC II VBOR
	01	B01A B01B B04A B04B B04C
	03	D12A
	04	E02A E02B E36A E36B
	05	F01A F01C F04Z F21A F21B F21C F28A F59A F59B F59C F59D F59E F59F F59G
	06	G12A G12B G16A G38A G38B
	07	H06Z
	08	I28A I28B
	09	J02A J02B J03A

CHOP	MDC	DRG
		J03B J04Z J11A
	10	K09A K09B
	11	L09A L09B
	12	M06Z M37Z
	13	N11A N11B
	14	O02A O02B
	21B	X06A X06B X06C
39.B7.28↔		BORP MBOR VAC
		VAC I VAC II VBOR
	01	B01A B01B B04A
		B04B B04C
	03	D12A
	04	E02A E02B E36A
		E36B
	05	F01A F01C F04Z
		F21A F21B F21C
		F28A F59A F59B
		F59C F59D F59E
		F59F F59G
	06	G12A G12B G16A
		G38A G38B
	07	H06Z
	08	I28A I28B
	09	J02A J02B J03A
		J03B J04Z J11A
	10	K09A K09B
	11	L09A L09B
	12	M06Z M37Z
	13	N11A N11B
	14	O02A O02B
	21B	X06A X06B X06C
39.B7.31↔		BORP MBOR VAC
		VAC I VAC II VBOR
	03	D12A
	04	E02A E02B E36A
		E36B
	05	F01A F01C F04Z
		F21A F21B F21C
		F28A F59A F59B
		F59C F59D F59E
		F59F F59G
	06	G12A G12B G16A
		G38A G38B
	07	H06Z
	08	I28A I28B
	09	J02A J02B J03A
		J03B J04Z J11A
	10	K09A K09B
	11	L09A L09B
	12	M06Z M37Z
	13	N11A N11B
	14	O02A O02B
	21B	X05Z X06A X06B
		X06C
39.B7.51↔		BORP MBOR VAC
		VAC I VAC II VBOR
	03	D12A
	04	E02A E02B E36A
		E36B
	05	F01A F01C F04Z
		F21A F21B F21C
		F28A F59A F59B
		F59C F59D F59E
		F59F F59G
	06	G12A G12B G16A
		G38A G38B
	07	H06Z
	08	I28A I28B
	09	J02A J02B J03A
		J03B J04Z J11A
	10	K09A K09B
	11	L09A L09B
	12	M06Z M37Z
	13	N11A N11B
	14	O02A O02B
	21B	X06A X06B X06C
39.B7.71↔		BORP MBOR VAC
		VAC I VAC II VBOR
	03	D12A
	04	E02A E02B E36A
		E36B
	05	F01A F01C F04Z
		F21A F21B F21C
		F28A F59A F59B
		F59C F59D F59E
		F59F F59G
	06	G12A G12B G16A
		G38A G38B
	07	H06Z
	08	I28A I28B
	09	J02A J02B J03A
		J03B J04Z J11A
	10	K09A K09B
	11	L09A L09B
	12	M06Z M37Z
	13	N11A N11B
	14	O02A O02B
	21B	X06A X06B X06C
39.B7.74↔		BORP MBOR VAC
		VAC I VAC II VBOR
	03	D12A
	04	E02A E02B E36A
		E36B
	05	F01A F01C F04Z
		F21A F21B F21C
		F28A F59A F59B
		F59C F59D F59E
		F59F F59G
	06	G12A G12B G16A
		G38A G38B
	07	H06Z
	08	I28A I28B
	09	J02A J02B J03A
		J03B J04Z J11A
	10	K09A K09B
	11	L09A L09B
	12	M06Z M37Z
	13	N11A N11B
	14	O02A O02B
	21B	X06A X06B X06C
39.B7.75↔		BORP MBOR VAC
		VAC I VAC II VBOR
	04	E36A E36B
	05	F01A F01C F12A
		F24A F24B F24C
		F24D F50A F50B
		F59D F59E
	06	G12A G16A G38A
		G38B
39.B7.81↔		BORP MBOR VAC
		VAC I VAC II VBOR
	03	D12A
	04	E02A E02B E36A
		E36B
	05	F01A F01C F04Z
		F21A F21B F21C
		F28A F59A F59B
		F59C F59D F59E
		F59F F59G
	06	G12A G12B G16A
		G38A G38B
	07	H06Z
	08	I28A I28B
	09	J02A J02B J03A
		J03B J04Z J11A
	10	K09A K09B
	11	L09A L09B
	12	M06Z M37Z
	13	N11A N11B
	14	O02A O02B
	21B	X05Z X06A X06B
		X06C
39.B7.A4↔		BORP MBOR VAC
		VAC I VAC II VBOR
	03	D12A
	04	E02A E02B E36A
		E36B
	05	F01A F01C F04Z
		F21A F21B F21C
		F28A F59A F59B
		F59C F59D F59E
		F59F F59G
	06	G12A G12B G16A
		G38A G38B
	07	H06Z
	08	I28A I28B
	09	J02A J02B J03A
		J03B J04Z J11A
	10	K09A K09B
	11	L09A L09B
	12	M06Z M37Z
	13	N11A N11B
	14	O02A O02B
	21B	X06A X06B X06C
39.B7.C1↔		BORP MBOR VAC
		VAC I VAC II VBOR
	03	D12A
	04	E02A E02B E36A
		E36B
	05	F01A F01C F04Z
		F21A F21B F21C
		F28A F59A F59B
		F59C F59D F59E
		F59F F59G
	06	G12A G12B G16A
		G38A G38B
	07	H06Z
	08	I28A I28B
	09	J02A J02B J03A
		J03B J04Z J11A
	10	K09A K09B
	11	L09A L09B
	12	M06Z M37Z
	13	N11A N11B
	14	O02A O02B
	21B	X06A X06B X06C
39.B7.C3↔		BORP MBOR VAC
		VAC I VAC II VBOR
	03	D12A
	04	E02A E02B E36A
		E36B
	05	F01A F01C F04Z
		F21A F21B F21C
		F28A F59A F59B
		F59C F59D F59E
		F59F F59G
	06	G12A G12B G16A
		G38A G38B
	07	H06Z

PROC

CHOP	MDC	DRG
	08	I28A I28B
	09	J02A J02B J03A J03B J04Z J11A
	10	K09A K09B
	11	L09A L09B
	12	M06Z M37Z
	13	N11A N11B
	14	O02A O02B
	21B	X06A X06B X06C
39.B7.D1↔		BORP MBOR VAC VAC I VAC II VBOR
	03	D12A
	04	E02A E02B E36A E36B
	05	F01A F01C F04Z F21A F21B F21C F28A F59A F59B F59C F59D F59E F59F F59G
	06	G12A G12B G16A G38A G38B
	07	H06Z
	08	I28A I28B
	09	J02A J02B J03A J03B J04Z J11A
	10	K09A K09B
	11	L09A L09B
	12	M06Z M37Z
	13	N11A N11B
	14	O02A O02B
	21B	X06A X06B X06C
39.B7.G1↔		BORP MBOR VAC VAC I VAC II VBOR
	03	D12A
	04	E02A E02B E36A E36B
	05	F01A F01C F04Z F21A F21B F21C F28A F59A F59B F59C F59D F59E F59F F59G
	06	G12A G12B G16A G38A G38B
	07	H06Z
	08	I28A I28B
	09	J02A J02B J03A J03B J04Z J11A
	10	K09A K09B
	11	L09A L09B
	12	M06Z M37Z
	13	N11A N11B
	14	O02A O02B
	21B	X05Z X06A X06B X06C
39.B7.H1↔		BORP MBOR VAC VAC I VAC II VBOR
	03	D12A
	04	E02A E02B E36A E36B
	05	F01A F01C F04Z F21A F21B F21C F28A F59A F59B F59C F59D F59E F59F F59G
	06	G12A G12B G16A G38A G38B
	07	H06Z
	08	I28A I28B
	09	J02A J02B J03A J03B J04Z J11A
	10	K09A K09B
	11	L09A L09B
	12	M06Z M37Z
	13	N11A N11B
	14	O02A O02B
	21B	X05Z X06A X06B X06C
39.B7.J3↔		BORP MBOR VAC VAC I VAC II VBOR
	03	D12A
	04	E02A E02B E36A E36B
	05	F01A F01C F04Z F21A F21B F21C F28A F59A F59B F59C F59D F59E F59F F59G
	06	G12A G12B G16A G38A G38B
	07	H06Z
	08	I28A I28B
	09	J02A J02B J03A J03B J04Z J11A
	10	K09A K09B
	11	L09A L09B
	12	M06Z M37Z
	13	N11A N11B
	14	O02A O02B
	21B	X06A X06B X06C
39.B7.J7↔		BORP MBOR VAC VAC I VAC II VBOR
	03	D12A
	04	E02A E02B E36A E36B
	05	F01A F01C F04Z F21A F21B F21C F28A F59A F59B F59C F59D F59E F59F F59G
	06	G12A G12B G16A G38A G38B
	07	H06Z
	08	I28A I28B
	09	J02A J02B J03A J03B J04Z J11A
	10	K09A K09B
	11	L09A L09B
	12	M06Z M37Z
	13	N11A N11B
	14	O02A O02B
	21B	X06A X06B X06C
39.B7.JB↔		BORP MBOR VAC VAC I VAC II VBOR
	03	D12A
	04	E02A E02B E36A E36B
	05	F01A F01C F04Z F21A F21B F21C F28A F59A F59B F59C F59D F59E F59F F59G
	06	G12A G12B G16A G38A G38B
	07	H06Z
	08	I28A I28B
	09	J02A J02B J03A J03B J04Z J11A
	10	K09A K09B
	11	L09A L09B
	12	M06Z M37Z
	13	N11A N11B
	14	O02A O02B
	21B	X05Z X06A X06B X06C
39.B7.JF↔		BORP MBOR VAC VAC I VAC II VBOR
	03	D12A
	04	E02A E02B E36A E36B
	05	F01A F01C F04Z F21A F21B F21C F28A F59A F59B F59C F59D F59E F59F F59G
	06	G12A G12B G16A G38A G38B
	07	H06Z
	08	I28A I28B
	09	J02A J02B J03A J03B J04Z J11A
	10	K09A K09B
	11	L09A L09B
	12	M06Z M37Z
	13	N11A N11B
	14	O02A O02B
	21B	X05Z X06A X06B X06C
39.B7.JI↔		BORP MBOR VAC VAC I VAC II VBOR
	03	D12A
	04	E02A E02B E36A E36B
	05	F01A F01C F04Z F21A F21B F21C F28A F59A F59B F59C F59D F59E F59F F59G
	06	G12A G12B G16A G38A G38B
	07	H06Z
	08	I28A I28B
	09	J02A J02B J03A J03B J04Z J11A
	10	K09A K09B
	11	L09A L09B
	12	M06Z M37Z
	13	N11A N11B
	14	O02A O02B
	21B	X06A X06B X06C
39.B7.L1↔		BORP KORP MBOR MKOR VAC VAC I VAC II VBOR VKOR
	01	B01A B01B B02A B02B B04A B04B B04C B20A B20B B20C
	03	D12A
	04	E02A E02B E36A E36B
	05	F01A F01C F04Z F21A F21B F21C F28A F59A F59B F59C F59D F59E F59F F59G
	06	G12A G12B G16A G38A G38B
	07	H06Z
	08	I28A I28B
	09	J11A
	10	K09A K09B

CHOP	MDC	DRG
	11	L09A L09B
	12	M06Z M37Z
	13	N11A N11B N25A
		N25B
	14	O02A O02B
	21B	X06A X06B X06C
39.B7.M2↔		BORP MBOR VAC
		VAC I VAC II VBOR
	04	E36A E36B
	05	F01A F01C F12A
		F24A F24B F24C
		F24D F50A F50B
		F59D F59E
	06	G12A G16A G38A
		G38B
39.B7.N2↔		BORP MBOR VAC
		VAC I VAC II VBOR
	04	E36A E36B
	05	F01A F01C F12A
		F24A F24B F24C
		F24D F50A F50B
		F59D F59E
	06	G12A G16A G38A
		G38B
39.B8.09↔	03	D12A
	04	E02A E02B
	05	F01A F01C F04Z
		F21A F21B F21C
		F28A F59A F59B
		F59C F59D F59E
		F59F
	06	G12A G12B
	07	H06Z
	08	I28A I28B
	09	J02A J02B J03A
		J03B J04Z J11A
	10	K09A K09B
	11	L09A L09B
	12	M06Z M37Z
	13	N11A N11B
	14	O02A O02B
	21B	X05Z X06A X06B
		X06C
39.B8.11↔		BORP KORP MBOR
		MKOR VAC VAC I
		VAC II VBOR VKOR
	01	B01A B01B B02A
		B02B B09A B09B
		B09C B09D B20A
		B20B B20C
	03	D12A
	04	E02A E02B E36A
		E36B
	05	F01A F01C F04Z
		F21A F21B F21C
		F28A F59A F59B
		F59C F59D F59E
		F59F F59G
	06	G12A G12B G16A
		G38A G38B
	07	H06Z
	08	I28A I28B
	09	J02A J02B J03A
		J03B J04Z J11A
	10	K09A K09B
	11	L09A L09B
	12	M06Z M37Z
	13	N11A N11B
	14	O02A O02B
	21B	X06A X06B X06C

CHOP	MDC	DRG
		X07A X07B
39.B8.22↔	01	B01A B01B B04A
		B04B B04C
	03	D12A
	04	E02A E02B
	05	F01A F01C F04Z
		F21A F21B F21C
		F28A F59A F59B
		F59C F59D F59E
		F59F F59G
	06	G12A G12B
	07	H06Z
	08	I28A I28B
	09	J02A J02B J03A
		J03B J04Z J11A
	10	K09A K09B
	11	L09A L09B
	12	M06Z M37Z
	13	N11A N11B
	14	O02A O02B
	21B	X06A X06B X06C
39.B8.23↔		BORP MBOR VAC
		VAC I VAC II VBOR
	01	B01A B01B B04A
		B04B B04C
	03	D12A
	04	E02A E02B E36A
		E36B
	05	F01A F01C F04Z
		F21A F21B F21C
		F28A F59A F59B
		F59C F59D F59E
		F59F F59G
	06	G12A G12B G16A
		G38A G38B
	07	H06Z
	08	I28A I28B
	09	J02A J02B J03A
		J03B J04Z J11A
	10	K09A K09B
	11	L09A L09B
	12	M06Z M37Z
	13	N11A N11B
	14	O02A O02B
	21B	X06A X06B X06C
39.B8.25↔		BORP MBOR VAC
		VAC I VAC II VBOR
	01	B01A B01B B04A
		B04B B04C
	03	D12A
	04	E02A E02B E36A
		E36B
	05	F01A F01C F04Z
		F21A F21B F21C
		F28A F59A F59B
		F59C F59D F59E
		F59F F59G
	06	G12A G12B G16A
		G38A G38B
	07	H06Z
	08	I28A I28B
	09	J02A J02B J03A
		J03B J04Z J11A
	10	K09A K09B
	11	L09A L09B
	12	M06Z M37Z
	13	N11A N11B
	14	O02A O02B
	21B	X06A X06B X06C
39.B8.26↔		BORP MBOR VAC

CHOP	MDC	DRG
		VAC I VAC II VBOR
	01	B01A B01B B04A
		B04B B04C
	03	D12A
	04	E02A E02B E36A
		E36B
	05	F01A F01C F04Z
		F21A F21B F21C
		F28A F59A F59B
		F59C F59D F59E
		F59F F59G
	06	G12A G12B G16A
		G38A G38B
	07	H06Z
	08	I28A I28B
	09	J02A J02B J03A
		J03B J04Z J11A
	10	K09A K09B
	11	L09A L09B
	12	M06Z M37Z
	13	N11A N11B
	14	O02A O02B
	21B	X06A X06B X06C
39.B8.27↔		BORP MBOR VAC
		VAC I VAC II VBOR
	01	B01A B01B B04A
		B04B B04C
	03	D12A
	04	E02A E02B E36A
		E36B
	05	F01A F01C F04Z
		F21A F21B F21C
		F28A F59A F59B
		F59C F59D F59E
		F59F F59G
	06	G12A G12B G16A
		G38A G38B
	07	H06Z
	08	I28A I28B
	09	J02A J02B J03A
		J03B J04Z J11A
	10	K09A K09B
	11	L09A L09B
	12	M06Z M37Z
	13	N11A N11B
	14	O02A O02B
	21B	X06A X06B X06C
39.B8.28↔		BORP MBOR VAC
		VAC I VAC II VBOR
	01	B01A B01B B04A
		B04B B04C
	03	D12A
	04	E02A E02B E36A
		E36B
	05	F01A F01C F04Z
		F21A F21B F21C
		F28A F59A F59B
		F59C F59D F59E
		F59F F59G
	06	G12A G12B G16A
		G38A G38B
	07	H06Z
	08	I28A I28B
	09	J02A J02B J03A
		J03B J04Z J11A
	10	K09A K09B
	11	L09A L09B
	12	M06Z M37Z
	13	N11A N11B
	14	O02A O02B

PROC

PROC

CHOP	MDC	DRG
	21B	X06A X06B X06C
39.B8.31↔		BORP MBOR VAC
		VAC I VAC II VBOR
	03	D12A
	04	E02A E02B E36A
		E36B
	05	F01A F01C F04Z
		F21A F21B F21C
		F28A F59A F59B
		F59C F59D F59E
		F59F
	06	G12A G12B G16A
		G38A G38B
	07	H06Z
	08	I28A I28B
	09	J02A J02B J03A
		J03B J04Z J11A
	10	K09A K09B
	11	L09A L09B
	12	M06Z M37Z
	13	N11A N11B
	14	O02A O02B
	21B	X05Z X06A X06B
		X06C
39.B8.51↔		BORP MBOR VAC
		VAC I VAC II VBOR
	03	D12A
	04	E02A E02B E36A
		E36B
	05	F01A F01C F04Z
		F21A F21B F21C
		F28A F59A F59B
		F59C F59D F59E
		F59F
	06	G12A G12B G16A
		G38A G38B
	07	H06Z
	08	I28A I28B
	09	J02A J02B J03A
		J03B J04Z J11A
	10	K09A K09B
	11	L09A L09B
	12	M06Z M37Z
	13	N11A N11B
	14	O02A O02B
	21B	X05Z X06A X06B
		X06C
39.B8.71↔		BORP MBOR VAC
		VAC I VAC II VBOR
	03	D12A
	04	E02A E02B E36A
		E36B
	05	F01A F01C F04Z
		F21A F21B F21C
		F28A F59A F59B
		F59C F59D F59E
		F59F F59G
	06	G12A G12B G16A
		G38A G38B
	07	H06Z
	08	I28A I28B
	09	J02A J02B J03A
		J03B J04Z J11A
	10	K09A K09B
	11	L09A L09B
	12	M06Z M37Z
	13	N11A N11B
	14	O02A O02B
	21B	X06A X06B X06C
39.B8.74↔		BORP MBOR VAC
		VAC I VAC II VBOR
	03	D12A
	04	E02A E02B E36A
		E36B
	05	F01A F01C F04Z
		F21A F21B F21C
		F28A F59A F59B
		F59C F59D F59E
		F59F F59G
	06	G12A G12B G16A
		G38A G38B
	07	H06Z
	08	I28A I28B
	09	J02A J02B J03A
		J03B J04Z J11A
	10	K09A K09B
	11	L09A L09B
	12	M06Z M37Z
	13	N11A N11B
	14	O02A O02B
	21B	X06A X06B X06C
39.B8.75↔		BORP MBOR VAC
		VAC I VAC II VBOR
	04	E36A E36B
	05	F01A F01C F12A
		F24A F24B F24C
		F24D F50A F50B
		F59D F59E
	06	G12A G16A G38A
		G38B
39.B8.81↔		BORP MBOR VAC
		VAC I VAC II VBOR
	03	D12A
	04	E02A E02B E36A
		E36B
	05	F01A F01C F04Z
		F21A F21B F21C
		F28A F59A F59B
		F59C F59D F59E
		F59F
	06	G12A G12B G16A
		G38A G38B
	07	H06Z
	08	I28A I28B
	09	J02A J02B J03A
		J03B J04Z J11A
	10	K09A K09B
	11	L09A L09B
	12	M06Z M37Z
	13	N11A N11B
	14	O02A O02B
	21B	X05Z X06A X06B
		X06C
39.B8.A4↔		BORP MBOR VAC
		VAC I VAC II VBOR
	03	D12A
	04	E02A E02B E36A
		E36B
	05	F01A F01C F04Z
		F21A F21B F21C
		F28A F59A F59B
		F59C F59D F59E
		F59F F59G
	06	G12A G12B G16A
		G38A G38B
	07	H06Z
	08	I28A I28B
	09	J02A J02B J03A
		J03B J04Z J11A
	10	K09A K09B
	11	L09A L09B
	12	M06Z M37Z
	13	N11A N11B
	14	O02A O02B
	21B	X06A X06B X06C
39.B8.C1↔		BORP MBOR VAC
		VAC I VAC II VBOR
	03	D12A
	04	E02A E02B E36A
		E36B
	05	F01A F01C F04Z
		F21A F21B F21C
		F28A F59A F59B
		F59C F59D F59E
		F59F
	06	G12A G12B G16A
		G38A G38B
	07	H06Z
	08	I28A I28B
	09	J02A J02B J03A
		J03B J04Z J11A
	10	K09A K09B
	11	L09A L09B
	12	M06Z M37Z
	13	N11A N11B
	14	O02A O02B
	21B	X06A X06B X06C
39.B8.C3↔		BORP MBOR VAC
		VAC I VAC II VBOR
	03	D12A
	04	E02A E02B E36A
		E36B
	05	F01A F01C F04Z
		F21A F21B F21C
		F28A F59A F59B
		F59C F59D F59E
		F59F
	06	G12A G12B G16A
		G38A G38B
	07	H06Z
	08	I28A I28B
	09	J02A J02B J03A
		J03B J04Z J11A
	10	K09A K09B
	11	L09A L09B
	12	M06Z M37Z
	13	N11A N11B
	14	O02A O02B
	21B	X06A X06B X06C
39.B8.D1↔		BORP MBOR VAC
		VAC I VAC II VBOR
	03	D12A
	04	E02A E02B E36A
		E36B
	05	F01A F01C F04Z
		F21A F21B F21C
		F28A F59A F59B
		F59C F59D F59E
		F59F
	06	G12A G12B G16A
		G38A G38B
	07	H06Z
	08	I28A I28B
	09	J02A J02B J03A
		J03B J04Z J11A
	10	K09A K09B
	11	L09A L09B
	12	M06Z M37Z
	13	N11A N11B
	14	O02A O02B

CHOP	MDC	DRG
	21B	X06A X06B X06C
39.B8.G1↔		BORP MBOR VAC
		VAC I VAC II VBOR
	03	D12A
	04	E02A E02B E36A
		E36B
	05	F01A F01C F04Z
		F21A F21B F21C
		F28A F59A F59B
		F59C F59D F59E
		F59F
	06	G12A G12B G16A
		G38A G38B
	07	H06Z
	08	I28A I28B
	09	J02A J02B J03A
		J03B J04Z J11A
	10	K09A K09B
	11	L09A L09B
	12	M06Z M37Z
	13	N11A N11B
	14	O02A O02B
	21B	X05Z X06A X06B
		X06C
39.B8.H1↔		BORP MBOR VAC
		VAC I VAC II VBOR
	03	D12A
	04	E02A E02B E36A
		E36B
	05	F01A F01C F04Z
		F21A F21B F21C
		F28A F59A F59B
		F59C F59D F59E
		F59F
	06	G12A G12B G16A
		G38A G38B
	07	H06Z
	08	I28A I28B
	09	J02A J02B J03A
		J03B J04Z J11A
	10	K09A K09B
	11	L09A L09B
	12	M06Z M37Z
	13	N11A N11B
	14	O02A O02B
	21B	X05Z X06A X06B
		X06C
39.B8.J3↔		BORP MBOR VAC
		VAC I VAC II VBOR
	03	D12A
	04	E02A E02B E36A
		E36B
	05	F01A F01C F04Z
		F21A F21B F21C
		F28A F59A F59B
		F59C F59D F59E
		F59F F59G
	06	G12A G12B G16A
		G38A G38B
	07	H06Z
	08	I28A I28B
	09	J02A J02B J03A
		J03B J04Z J11A
	10	K09A K09B
	11	L09A L09B
	12	M06Z M37Z
	13	N11A N11B
	14	O02A O02B
	21B	X06A X06B X06C
39.B8.J7↔		BORP MBOR VAC
		VAC I VAC II VBOR
	03	D12A
	04	E02A E02B E36A
		E36B
	05	F01A F01C F04Z
		F21A F21B F21C
		F28A F59A F59B
		F59C F59D F59E
		F59F F59G
	06	G12A G12B G16A
		G38A G38B
	07	H06Z
	08	I28A I28B
	09	J02A J02B J03A
		J03B J04Z J11A
	10	K09A K09B
	11	L09A L09B
	12	M06Z M37Z
	13	N11A N11B
	14	O02A O02B
	21B	X05Z X06A X06B
		X06C
39.B8.JB↔		BORP MBOR VAC
		VAC I VAC II VBOR
	03	D12A
	04	E02A E02B E36A
		E36B
	05	F01A F01C F04Z
		F21A F21B F21C
		F28A F59A F59B
		F59C F59D F59E
		F59F
	06	G12A G12B G16A
		G38A G38B
	07	H06Z
	08	I28A I28B
	09	J02A J02B J03A
		J03B J04Z J11A
	10	K09A K09B
	11	L09A L09B
	12	M06Z M37Z
	13	N11A N11B
	14	O02A O02B
	21B	X05Z X06A X06B
		X06C
39.B8.JF↔		BORP MBOR VAC
		VAC I VAC II VBOR
	03	D12A
	04	E02A E02B E36A
		E36B
	05	F01A F01C F04Z
		F21A F21B F21C
		F28A F59A F59B
		F59C F59D F59E
		F59F
	06	G12A G12B G16A
		G38A G38B
	07	H06Z
	08	I28A I28B
	09	J02A J02B J03A
		J03B J04Z J11A
	10	K09A K09B
	11	L09A L09B
	12	M06Z M37Z
	13	N11A N11B
	14	O02A O02B
	21B	X05Z X06A X06B
		X06C
39.B8.JI↔		BORP MBOR VAC
		VAC I VAC II VBOR
	03	D12A
	04	E02A E02B E36A
		E36B
	05	F01A F01C F04Z
		F21A F21B F21C
		F28A F59A F59B
		F59C F59D F59E
		F59F F59G
	06	G12A G12B G16A
		G38A G38B
	07	H06Z
	08	I28A I28B
	09	J02A J02B J03A
		J03B J04Z J11A
	10	K09A K09B
	11	L09A L09B
	12	M06Z M37Z
	13	N11A N11B
	14	O02A O02B
	21B	X06A X06B X06C
39.B8.L1↔		BORP KORP MBOR
		MKOR VAC VAC I
		VAC II VBOR VKOR
	01	B01A B01B B02A
		B02B B04A B04B
		B04C B20A B20B
		B20C
	03	D12A
	04	E02A E02B E36A
		E36B
	05	F01A F01C F04Z
		F21A F21B F21C
		F28A F59A F59B
		F59C F59D F59E
		F59F F59G
	06	G12A G12B G16A
		G38A G38B
	07	H06Z
	08	I28A I28B
	09	J11A
	10	K09A K09B
	11	L09A L09B
	12	M06Z M37Z
	13	N11A N11B N25A
		N25B
	14	O02A O02B
	21B	X06A X06B X06C
39.B8.M2↔		BORP MBOR VAC
		VAC I VAC II VBOR
	04	E36A E36B
	05	F01A F01C F12A
		F24A F24B F24C
		F24D F50A F50B
		F59D F59E
	06	G12A G16A G38A
		G38B
39.B8.N2↔		BORP MBOR VAC
		VAC I VAC II VBOR
	04	E36A E36B
	05	F01A F01C F12A
		F24A F24B F24C
		F24D F50A F50B
		F59D F59E
	06	G12A G16A G38A
		G38B
39.BA.09↔	03	D12A
	04	E02A E02B
	05	F01A F01C F04Z
		F21A F21B F21C
		F28A F59A F59B
		F59C F59D F59E

PROC

CHOP	MDC	DRG
		F59F
	06	G12A G12B
	07	H06Z
	08	I28A I28B
	09	J02A J02B J03A
		J03B J04Z J11A
	10	K09A K09B
	11	L09A L09B
	12	M06Z M37Z
	13	N11A N11B
	14	O02A O02B
	21B	X05Z X06A X06B
		X06C
39.BA.A4↔		BORP MBOR VAC
		VAC I VAC II VBOR
	03	D12A
	04	E02A E02B E36A
		E36B
	05	F01A F01C F04Z
		F21A F21B F21C
		F28A F59A F59B
		F59C F59D F59E
		F59F F59G
	06	G12A G12B G16A
		G38A G38B
	07	H06Z
	08	I28A I28B
	09	J02A J02B J03A
		J03B J04Z J11A
	10	K09A K09B
	11	L09A L09B
	12	M06Z M37Z
	13	N11A N11B
	14	O02A O02B
	21B	X06A X06B X06C
39.BA.J3↔		BORP MBOR VAC
		VAC I VAC II VBOR
	03	D12A
	04	E02A E02B E36A
		E36B
	05	F01A F01C F04Z
		F21A F21B F21C
		F28A F59A F59B
		F59C F59D F59E
		F59F F59G
	06	G12A G12B G16A
		G38A G38B
	07	H06Z
	08	I28A I28B
	09	J02A J02B J03A
		J03B J04Z J11A
	10	K09A K09B
	11	L09A L09B
	12	M06Z M37Z
	13	N11A N11B
	14	O02A O02B
	21B	X06A X06B X06C
39.BA.M2↔		BORP MBOR VAC
		VAC I VAC II VBOR
	04	E36A E36B
	05	F01A F01C F12A
		F24A F24B F24C
		F24D F50A F50B
		F59D F59E
	06	G12A G16A G38A
		G38B
39.BA.N2↔		BORP MBOR VAC
		VAC I VAC II VBOR
	04	E36A E36B
	05	F01A F01C F12A

CHOP	MDC	DRG
		F24A F24B F24C
		F24D F50A F50B
		F59D F59E
	06	G12A G16A G38A
		G38B
39.BB.09↔	03	D12A
	04	E02A E02B
	05	F01A F01C F04Z
		F21A F21B F21C
		F28A F59A F59B
		F59C F59D F59E
		F59F
	06	G12A G12B
	07	H06Z
	08	I28A I28B
	09	J02A J02B J03A
		J03B J04Z J11A
	10	K09A K09B
	11	L09A L09B
	12	M06Z M37Z
	13	N11A N11B
	14	O02A O02B
	21B	X05Z X06A X06B
		X06C
39.BB.A4↔		BORP MBOR VAC
		VAC I VAC II VBOR
	03	D12A
	04	E02A E02B E36A
		E36B
	05	F01A F01C F04Z
		F21A F21B F21C
		F28A F59A F59B
		F59C F59D F59E
		F59F F59G
	06	G12A G12B G16A
		G38A G38B
	07	H06Z
	08	I28A I28B
	09	J02A J02B J03A
		J03B J04Z J11A
	10	K09A K09B
	11	L09A L09B
	12	M06Z M37Z
	13	N11A N11B
	14	O02A O02B
	21B	X06A X06B X06C
39.BB.J3↔		BORP MBOR VAC
		VAC I VAC II VBOR
	03	D12A
	04	E02A E02B E36A
		E36B
	05	F01A F01C F04Z
		F21A F21B F21C
		F28A F59A F59B
		F59C F59D F59E
		F59F F59G
	06	G12A G12B G16A
		G38A G38B
	07	H06Z
	08	I28A I28B
	09	J02A J02B J03A
		J03B J04Z J11A
	10	K09A K09B
	11	L09A L09B
	12	M06Z M37Z
	13	N11A N11B
	14	O02A O02B
	21B	X06A X06B X06C
39.BB.M2↔		BORP MBOR VAC
		VAC I VAC II VBOR

CHOP	MDC	DRG
	04	E36A E36B
	05	F01A F01C F12A
		F24A F24B F24C
		F24D F50A F50B
		F59D F59E
	06	G12A G16A G38A
		G38B
39.BB.N2↔		BORP MBOR VAC
		VAC I VAC II VBOR
	04	E36A E36B
	05	F01A F01C F12A
		F24A F24B F24C
		F24D F50A F50B
		F59D F59E
	06	G12A G16A G38A
		G38B
39.BE↔		BORP KORP MBOR
		MKOR VAC VAC I
		VAC II VBOR VKOR
	01	B01A B01B B02A
		B02B B09A B09B
		B09C B09D B20A
		B20B B20C
	03	D12A
	04	E02A E02B E36A
		E36B
	05	F01A F01C F04Z
		F21A F21B F21C
		F28A F59A F59B
		F59C F59D F59E
		F59F F59G
	06	G12A G12B G16A
		G38A G38B
	07	H06Z
	08	I28A I28B
	09	J02A J02B J03A
		J03B J04Z J11A
	10	K09A K09B
	11	L09A L09B
	12	M06Z M37Z
	13	N11A N11B
	14	O02A O02B
	21B	X06A X06B X06C
		X07A X07B
39.BF.09↔	03	D12A
	04	E02A E02B
	05	F01A F01C F04Z
		F21A F21B F21C
		F28A F59A F59B
		F59C F59D F59E
		F59F F59G
	06	G12A G12B
	07	H06Z
	08	I28A I28B
	09	J02A J02B J03A
		J03B J04Z J11A
	10	K09A K09B
	11	L09A L09B
	12	M06Z M37Z
	13	N11A N11B
	14	O02A O02B
	21B	X05Z X06A X06B
		X06C
39.BF.11↔		BORP KORP MBOR
		MKOR VAC VAC I
		VAC II VBOR VKOR
	01	B01A B01B B02A
		B02B B09A B09B
		B09C B09D B20A
		B20B B20C

CHOP	MDC	DRG
	03	D12A
	04	E02A E02B E36A E36B
	05	F01A F01C F04Z F21A F21B F21C F28A F59A F59B F59C F59D F59E F59F F59G
	06	G12A G12B G16A G38A G38B
	07	H06Z
	08	I28A I28B
	09	J02A J02B J03A J03B J04Z J11A
	10	K09A K09B
	11	L09A L09B
	12	M06Z M37Z
	13	N11A N11B
	14	O02A O02B
	21B	X06A X06B X06C X07A X07B
39.BF.51↔		BORP MBOR VAC VAC I VAC II VBOR
	03	D12A
	04	E02A E02B E36A E36B
	05	F01A F01C F04Z F21A F21B F21C F28A F59A F59B F59C F59D F59E F59F F59G
	06	G12A G12B G16A G38A G38B
	07	H06Z
	08	I28A I28B
	09	J02A J02B J03A J03B J04Z J11A
	10	K09A K09B
	11	L09A L09B
	12	M06Z M37Z
	13	N11A N11B
	14	O02A O02B
	21B	X05Z X06A X06B X06C
39.BF.H1↔		BORP MBOR VAC VAC I VAC II VBOR
	03	D12A
	04	E02A E02B E36A E36B
	05	F01A F01C F04Z F21A F21B F21C F28A F59A F59B F59C F59D F59E F59F F59G
	06	G12A G12B G16A G38A G38B
	07	H06Z
	08	I28A I28B
	09	J02A J02B J03A J03B J04Z J11A
	10	K09A K09B
	11	L09A L09B
	12	M06Z M37Z
	13	N11A N11B
	14	O02A O02B
	21B	X05Z X06A X06B X06C
39.BG.09↔		BORP MBOR VAC VAC I VAC II VBOR
	03	D12A
	04	E02A E02B E36A E36B
	05	F01A F01C F04Z F21A F21B F21C F28A F59A F59B F59C F59D F59E F59F
	06	G12A G12B G16A G38A G38B
	07	H06Z
	08	I28A I28B
	09	J02A J02B J03A J03B J04Z J11A
	10	K09A K09B
	11	L09A L09B
	12	M06Z M37Z
	13	N11A N11B
	14	O02A O02B
	21B	X05Z X06A X06B X06C
39.BG.31↔		BORP MBOR VAC VAC I VAC II VBOR
	03	D12A
	04	E02A E02B E36A E36B
	05	F01A F01C F04Z F21A F21B F21C F28A F59A F59B F59C F59D F59E F59F
	06	G12A G12B G16A G38A G38B
	07	H06Z
	08	I28A I28B
	09	J02A J02B J03A J03B J04Z J11A
	10	K09A K09B
	11	L09A L09B
	12	M06Z M37Z
	13	N11A N11B
	14	O02A O02B
	21B	X05Z X06A X06B X06C
39.BG.81↔		BORP MBOR VAC VAC I VAC II VBOR
	03	D12A
	04	E02A E02B E36A E36B
	05	F01A F01C F04Z F21A F21B F21C F28A F59A F59B F59C F59D F59E F59F
	06	G12A G12B G16A G38A G38B
	07	H06Z
	08	I28A I28B
	09	J02A J02B J03A J03B J04Z J11A
	10	K09A K09B
	11	L09A L09B
	12	M06Z M37Z
	13	N11A N11B
	14	O02A O02B
	21B	X05Z X06A X06B X06C
39.BG.C1↔		BORP MBOR VAC VAC I VAC II VBOR
	03	D12A
	04	E02A E02B E36A E36B
	05	F01A F01C F04Z F21A F21B F21C F28A F59A F59B F59C F59D F59E F59F
	06	G12A G12B G16A G38A G38B
	07	H06Z
	08	I28A I28B
	09	J02A J02B J03A J03B J04Z J11A
	10	K09A K09B
	11	L09A L09B
	12	M06Z M37Z
	13	N11A N11B
	14	O02A O02B
	21B	X05Z X06A X06B X06C
39.BG.C3↔		BORP MBOR VAC VAC I VAC II VBOR
	03	D12A
	04	E02A E02B E36A E36B
	05	F01A F01C F04Z F21A F21B F21C F28A F59A F59B F59C F59D F59E F59F
	06	G12A G12B G16A G38A G38B
	07	H06Z
	08	I28A I28B
	09	J02A J02B J03A J03B J04Z J11A
	10	K09A K09B
	11	L09A L09B
	12	M06Z M37Z
	13	N11A N11B
	14	O02A O02B
	21B	X05Z X06A X06B X06C
39.BG.G1↔		BORP MBOR VAC VAC I VAC II VBOR
	03	D12A
	04	E02A E02B E36A E36B
	05	F01A F01C F04Z F21A F21B F21C F28A F59A F59B F59C F59D F59E F59F
	06	G12A G12B G16A G38A G38B
	07	H06Z
	08	I28A I28B
	09	J02A J02B J03A J03B J04Z J11A
	10	K09A K09B
	11	L09A L09B
	12	M06Z M37Z
	13	N11A N11B
	14	O02A O02B
	21B	X05Z X06A X06B X06C
39.BG.H1↔		BORP MBOR VAC VAC I VAC II VBOR
	03	D12A
	04	E02A E02B E36A E36B

PROC

CHOP	MDC	DRG
	05	F01A F01C F04Z F21A F21B F21C F28A F59A F59B F59C F59D F59E F59F
	06	G12A G12B G16A G38A G38B
	07	H06Z
	08	I28A I28B
	09	J02A J02B J03A J03B J04Z J11A
	10	K09A K09B
	11	L09A L09B
	12	M06Z M37Z
	13	N11A N11B
	14	O02A O02B
	21B	X05Z X06A X06B X06C
39.BH.09↔	03	D12A
	04	E02A E02B
	05	F01A F01C F04Z F21A F21B F21C F28A F59A F59B F59C F59D F59E F59F F59G
	06	G12A G12B
	07	H06Z
	08	I28A I28B
	09	J02A J02B J03A J03B J04Z J11A
	10	K09A K09B
	11	L09A L09B
	12	M06Z M37Z
	13	N11A N11B
	14	O02A O02B
	21B	X05Z X06A X06B X06C
39.BH.11↔		BORP KORP MBOR MKOR VAC VAC I VAC II VBOR VKOR
	01	B01A B01B B02A B02B B20A B20B B20C
	02	C14Z
	03	D12A
	04	E02A E02B E36A E36B
	05	F01A F01C F04Z F21A F21B F21C F28A F59A F59B F59C F59D F59E F59F F59G
	06	G12A G12B G16A G38A G38B
	07	H06Z
	08	I28A I28B
	09	J11A
	10	K09A K09B
	11	L09A L09B
	12	M06Z M37Z
	13	N11A N11B
	14	O02A O02B
	21B	X06A X06B X06C
39.BH.22↔	01	B01A B01B B04A B04B B04C
	03	D12A
	04	E02A E02B
	05	F01A F01C F04Z F21A F21B F21C F28A F59A F59B F59C F59D F59E F59F F59G
	06	G12A G12B
	07	H06Z
	08	I28A I28B
	09	J02A J02B J03A J03B J04Z J11A
	10	K09A K09B
	11	L09A L09B
	12	M06Z M37Z
	13	N11A N11B
	14	O02A O02B
	21B	X06A X06B X06C
39.BH.23↔		BORP MBOR VAC VAC I VAC II VBOR
	01	B01A B01B B04A B04B B04C
	03	D12A
	04	E02A E02B E36A E36B
	05	F01A F01C F04Z F21A F21B F21C F28A F59A F59B F59C F59D F59E F59F F59G
	06	G12A G12B G16A G38A G38B
	07	H06Z
	08	I28A I28B
	09	J02A J02B J03A J03B J04Z J11A
	10	K09A K09B
	11	L09A L09B
	12	M06Z M37Z
	13	N11A N11B
	14	O02A O02B
	21B	X06A X06B X06C
39.BH.25↔		BORP MBOR VAC VAC I VAC II VBOR
	01	B01A B01B B04A B04B B04C
	03	D12A
	04	E02A E02B E36A E36B
	05	F01A F01C F04Z F21A F21B F21C F28A F59A F59B F59C F59D F59E F59F F59G
	06	G12A G12B G16A G38A G38B
	07	H06Z
	08	I28A I28B
	09	J02A J02B J03A J03B J04Z J11A
	10	K09A K09B
	11	L09A L09B
	12	M06Z M37Z
	13	N11A N11B
	14	O02A O02B
	21B	X06A X06B X06C
39.BH.26↔		BORP MBOR VAC VAC I VAC II VBOR
	01	B01A B01B B04A B04B B04C
	03	D12A
	04	E02A E02B E36A E36B
	05	F01A F01C F04Z F21A F21B F21C F28A F59A F59B F59C F59D F59E F59F F59G
	06	G12A G12B G16A G38A G38B
	07	H06Z
	08	I28A I28B
	09	J02A J02B J03A J03B J04Z J11A
	10	K09A K09B
	11	L09A L09B
	12	M06Z M37Z
	13	N11A N11B
	14	O02A O02B
	21B	X06A X06B X06C
39.BH.27↔		BORP MBOR VAC VAC I VAC II VBOR
	01	B01A B01B B04A B04B B04C
	03	D12A
	04	E02A E02B E36A E36B
	05	F01A F01C F04Z F21A F21B F21C F28A F59A F59B F59C F59D F59E F59F F59G
	06	G12A G12B G16A G38A G38B
	07	H06Z
	08	I28A I28B
	09	J02A J02B J03A J03B J04Z J11A
	10	K09A K09B
	11	L09A L09B
	12	M06Z M37Z
	13	N11A N11B
	14	O02A O02B
	21B	X06A X06B X06C
39.BH.28↔		BORP MBOR VAC VAC I VAC II VBOR
	01	B01A B01B B04A B04B B04C
	03	D12A
	04	E02A E02B E36A E36B
	05	F01A F01C F04Z F21A F21B F21C F28A F59A F59B F59C F59D F59E F59F F59G
	06	G12A G12B G16A G38A G38B
	07	H06Z
	08	I28A I28B
	09	J02A J02B J03A J03B J04Z J11A
	10	K09A K09B
	11	L09A L09B
	12	M06Z M37Z
	13	N11A N11B
	14	O02A O02B
	21B	X06A X06B X06C
39.BH.31↔		BORP MBOR VAC VAC I VAC II VBOR
	03	D12A
	04	E02A E02B E36A E36B
	05	F01A F01C F04Z F21A F21B F21C

CHOP	MDC	DRG
		F28A F59A F59B
		F59C F59D F59E
		F59F F59G
	06	G12A G12B G16A
		G38A G38B
	07	H06Z
	08	I28A I28B
	09	J02A J02B J03A
		J03B J04Z J11A
	10	K09A K09B
	11	L09A L09B
	12	M06Z M37Z
	13	N11A N11B
	14	O02A O02B
	21B	X05Z X06A X06B
		X06C
39.BH.51↔		BORP MBOR VAC
		VAC I VAC II VBOR
	03	D12A
	04	E02A E02B E36A
		E36B
	05	F01A F01C F04Z
		F21A F21B F21C
		F28A F59A F59B
		F59C F59D F59E
		F59F F59G
	06	G12A G12B G16A
		G38A G38B
	07	H06Z
	08	I28A I28B
	09	J02A J02B J03A
		J03B J04Z J11A
	10	K09A K09B
	11	L09A L09B
	12	M06Z M37Z
	13	N11A N11B
	14	O02A O02B
	21B	X05Z X06A X06B
		X06C
39.BH.71↔		BORP MBOR VAC
		VAC I VAC II VBOR
	03	D12A
	04	E02A E02B E36A
		E36B
	05	F01A F01C F04Z
		F21A F21B F21C
		F28A F59A F59B
		F59C F59D F59E
		F59F F59G
	06	G12A G12B G16A
		G38A G38B
	07	H06Z
	08	I28A I28B
	09	J02A J02B J03A
		J03B J04Z J11A
	10	K09A K09B
	11	L09A L09B
	12	M06Z M37Z
	13	N11A N11B
	14	O02A O02B
	21B	X06A X06B X06C
39.BH.74↔		BORP MBOR VAC
		VAC I VAC II VBOR
	03	D12A
	04	E02A E02B E36A
		E36B
	05	F01A F01C F04Z
		F21A F21B F21C
		F28A F59A F59B
		F59C F59D F59E
		F59F F59G
	06	G12A G12B G16A
		G38A G38B
	07	H06Z
	08	I28A I28B
	09	J02A J02B J03A
		J03B J04Z J11A
	10	K09A K09B
	11	L09A L09B
	12	M06Z M37Z
	13	N11A N11B
	14	O02A O02B
	21B	X06A X06B X06C
39.BH.75↔		BORP MBOR VAC
		VAC I VAC II VBOR
	04	E36A E36B
	05	F01A F01C F12A
		F24A F24B F24C
		F24D F50A F50B
		F59D F59E
	06	G12A G16A G38A
		G38B
39.BH.81↔		BORP MBOR VAC
		VAC I VAC II VBOR
	03	D12A
	04	E02A E02B E36A
		E36B
	05	F01A F01C F04Z
		F21A F21B F21C
		F28A F59A F59B
		F59C F59D F59E
		F59F F59G
	06	G12A G12B G16A
		G38A G38B
	07	H06Z
	08	I28A I28B
	09	J02A J02B J03A
		J03B J04Z J11A
	10	K09A K09B
	11	L09A L09B
	12	M06Z M37Z
	13	N11A N11B
	14	O02A O02B
	21B	X05Z X06A X06B
		X06C
39.BH.C1↔		BORP MBOR VAC
		VAC I VAC II VBOR
	03	D12A
	04	E02A E02B E36A
		E36B
	05	F01A F01C F04Z
		F21A F21B F21C
		F28A F59A F59B
		F59C F59D F59E
		F59F F59G
	06	G12A G12B G16A
		G38A G38B
	07	H06Z
	08	I28A I28B
	09	J02A J02B J03A
		J03B J04Z J11A
	10	K09A K09B
	11	L09A L09B
	12	M06Z M37Z
	13	N11A N11B
	14	O02A O02B
	21B	X06A X06B X06C
39.BH.C3↔		BORP MBOR VAC
		VAC I VAC II VBOR
	03	D12A
	04	E02A E02B E36A
		E36B
	05	F01A F01C F04Z
		F21A F21B F21C
		F28A F59A F59B
		F59C F59D F59E
		F59F F59G
	06	G12A G12B G16A
		G38A G38B
	07	H06Z
	08	I28A I28B
	09	J02A J02B J03A
		J03B J04Z J11A
	10	K09A K09B
	11	L09A L09B
	12	M06Z M37Z
	13	N11A N11B
	14	O02A O02B
	21B	X06A X06B X06C
39.BH.D1↔		BORP MBOR VAC
		VAC I VAC II VBOR
	03	D12A
	04	E02A E02B E36A
		E36B
	05	F01A F01C F04Z
		F21A F21B F21C
		F28A F59A F59B
		F59C F59D F59E
		F59F F59G
	06	G12A G12B G16A
		G38A G38B
	07	H06Z
	08	I28A I28B
	09	J02A J02B J03A
		J03B J04Z J11A
	10	K09A K09B
	11	L09A L09B
	12	M06Z M37Z
	13	N11A N11B
	14	O02A O02B
	21B	X06A X06B X06C
39.BH.G1↔		BORP MBOR VAC
		VAC I VAC II VBOR
	03	D12A
	04	E02A E02B E36A
		E36B
	05	F01A F01C F04Z
		F21A F21B F21C
		F28A F59A F59B
		F59C F59D F59E
		F59F F59G
	06	G12A G12B G16A
		G38A G38B
	07	H06Z
	08	I28A I28B
	09	J02A J02B J03A
		J03B J04Z J11A
	10	K09A K09B
	11	L09A L09B
	12	M06Z M37Z
	13	N11A N11B
	14	O02A O02B
	21B	X05Z X06A X06B
		X06C
39.BH.H1↔		BORP MBOR VAC
		VAC I VAC II VBOR
	03	D12A
	04	E02A E02B E36A
		E36B
	05	F01A F01C F04Z

PROC

PROC

CHOP	MDC	DRG
		F21A F21B F21C
		F28A F59A F59B
		F59C F59D F59E
		F59F F59G
	06	G12A G12B G16A
		G38A G38B
	07	H06Z
	08	I28A I28B
	09	J02A J02B J03A
		J03B J04Z J11A
	10	K09A K09B
	11	L09A L09B
	12	M06Z M37Z
	13	N11A N11B
	14	O02A O02B
	21B	X05Z X06A X06B
		X06C
39.BH.J7↔		BORP MBOR VAC
		VAC I VAC II VBOR
	03	D12A
	04	E02A E02B E36A
		E36B
	05	F01A F01C F04Z
		F21A F21B F21C
		F28A F59A F59B
		F59C F59D F59E
		F59F F59G
	06	G12A G12B G16A
		G38A G38B
	07	H06Z
	08	I28A I28B
	09	J02A J02B J03A
		J03B J04Z J11A
	10	K09A K09B
	11	L09A L09B
	12	M06Z M37Z
	13	N11A N11B
	14	O02A O02B
	21B	X06A X06B X06C
39.BH.JB↔		BORP MBOR VAC
		VAC I VAC II VBOR
	03	D12A
	04	E02A E02B E36A
		E36B
	05	F01A F01C F04Z
		F21A F21B F21C
		F28A F59A F59B
		F59C F59D F59E
		F59F F59G
	06	G12A G12B G16A
		G38A G38B
	07	H06Z
	08	I28A I28B
	09	J02A J02B J03A
		J03B J04Z J11A
	10	K09A K09B
	11	L09A L09B
	12	M06Z M37Z
	13	N11A N11B
	14	O02A O02B
	21B	X06A X06B X06C
39.BH.JF↔		BORP MBOR VAC
		VAC I VAC II VBOR
	03	D12A
	04	E02A E02B E36A
		E36B
	05	F01A F01C F04Z
		F21A F21B F21C
		F28A F59A F59B
		F59C F59D F59E
		F59F F59G
	06	G12A G12B G16A
		G38A G38B
	07	H06Z
	08	I28A I28B
	09	J02A J02B J03A
		J03B J04Z J11A
	10	K09A K09B
	11	L09A L09B
	12	M06Z M37Z
	13	N11A N11B N25A
		N25B
	14	O02A O02B
	21B	X06A X06B X06C
39.C1.12‡↔	01	B60A
	05	F51A F51B
39.C1.13‡↔	01	B60A
	05	F51A F59F
39.C1.14‡↔	01	B60A
	05	F51A F59F
39.C1.15‡↔	01	B60A
	05	F51A F59F
39.C1.17‡↔	01	B60A
	05	F51A F59F
39.C1.18‡↔	01	B60A
	05	F51A F59F
39.C1.1A‡↔	01	B60A
	05	F51A F59F
39.C1.1B‡↔	01	B60A
	05	F51A F59F
39.C1.1C‡↔	01	B60A
	05	F51A F59F
39.C1.1D‡↔	01	B60A
	05	F51A F59F
39.C1.1E‡↔	01	B60A
	05	F51A F59F
39.C1.1F‡↔	01	B60A
	05	F51A F59F
39.C1.1G‡↔	01	B60A
	05	F51A F59F
39.C1.1H‡↔	01	B60A
	05	F51A F59F
39.C1.1I‡↔	01	B60A
	05	F51A F59F
39.C1.1J‡↔	01	B60A
	05	F51A F59F
39.C1.1K‡↔	01	B60A
	05	F51A F59F
39.C1.1L‡↔	01	B60A
	05	F51A F59F
39.C1.1M‡↔	01	B60A
	05	F51A F59F
39.C4.12‡↔	01	B60A
	05	F59F
39.C4.13‡↔	01	B60A
	05	F59F
39.C4.14‡↔	01	B60A
	05	F59F
39.D1.11↔		BORP MBOR VAC
		VAC I VAC II VBOR
	04	E36A E36B
	05	F01A F01B F01C
		F01D F01E F01F
		F03A F03B F04Z
		F06A F12A F12B
		F12C F98B
	06	G12A G16A G38A
		G38B
40.0↔	09	J02A J02B J03A
		J03B J04Z J11A
		J11B
40.11.10↔	01	B17A B17B
	04	E02A E02B E02C
	06	G12A G12B
	07	H06Z
	08	I28A I28B
	09	J02A J02B J03A
		J03B J04Z J11A
		J11B
	10	K09A K09B
	11	L09A L09B
	12	M06Z M09A M09B
		M37Z
	13	N01D N02A N02B
		N04A N04B N06A
		N06B N06C N33Z
	16	Q03Z
40.11.11↔	01	B17A B17B
	03	D12A D12B
	04	E02A E02B E02C
	06	G12A G12B

CHOP	MDC	DRG
	07	H06Z
	08	I28A I28B
	09	J02A J02B J03A
		J03B J04Z J11A
		J11B
	10	K09A K09B
	11	L09A L09B
	12	M06Z M09A M09B
		M37Z
	13	N01D N02A N02B
		N04A N04B N06A
		N06B N06C N33Z
	16	Q03Z
40.11.20‡↔		AKBB
	01	B60A
	16	Q86A
40.11.99‡↔		AKBB
	01	B60A
	16	Q86A
40.21.10↔		VB
	01	B17A
	03	D12A D12B
	04	E01A E01B E02A
		E02B E02C E06A
		E06B E06C
	05	F21A F21B F21C
	06	G12A G12B
	07	H12A H12B H33Z
	08	I28A I28B
	09	J02A J02B J03A
		J03B J04Z J11A
		J11B J21Z J23A
		J23B J24A J24B
		J25Z
	10	K09A K09B
	11	L09A L09B L33Z
	12	M09A M09B M37Z
	13	N01D N02A N02B
		N04A N04B N06A
		N06B N06C N23A
		N23B N33Z
	14	O02A O02B
	16	Q03Z
	21B	X04Z X05Z X06A
		X06B X06C
	22	Y02A Y02B Y02C
40.21.11↔	03	D12A D12B
	04	E02A E02B E02C
	06	G12A G12B
	08	I28A I28B
	09	J01A J01B J02A
		J02B J03A J03B
		J04Z J11A J11B
		J21Z J23A J23B
		J24A J24B J25Z
	10	K09A K09B
	11	L09A L09B
	12	M06Z M09A M09B
		M37Z
	13	N01D N02A N02B
		N04A N04B N06A
		N06B N06C N23A
		N23B N33Z
	14	O02A O02B
	16	Q03Z
40.21.99↔		VB
	01	B17A
	03	D12A D12B
	04	E01A E01B E02A
		E02B E02C E06A
		E06B E06C
	05	F21A F21B F21C
	06	G12A G12B
	07	H12A H12B H33Z
	08	I28A I28B
	09	J02A J02B J03A
		J03B J04Z J11A
		J11B J21Z J23A
		J23B J24A J24B
		J25Z
	10	K09A K09B
	11	L09A L09B L33Z
	12	M09A M09B M37Z
	13	N01D N02A N02B
		N04A N04B N06A
		N06B N06C N23A
		N23B N33Z
	14	O02A O02B
	16	Q03Z
	21B	X04Z X05Z X06A
		X06B X06C
	22	Y02A Y02B Y02C
40.22.10↔		VB
	01	B17A
	03	D12A D12B
	04	E01A E01B E02A
		E02B E02C E06A
		E06B E06C
	05	F21A F21B F21C
	06	G12A G12B
	07	H12A H12B H33Z
	08	I28A I28B
	09	J02A J02B J03A
		J03B J04Z J11A
		J11B J21Z J23A
		J23B J24A J24B
		J25Z
	10	K09A K09B
	11	L09A L09B L33Z
	12	M09A M09B M37Z
	13	N01D N02A N02B
		N04A N04B N06A
		N06B N06C N23A
		N23B N33Z
	14	O02A O02B
	16	Q03Z
	21B	X04Z X05Z X06A
		X06B X06C
	22	Y02A Y02B Y02C
40.22.20↔		VB
	01	B17A
	03	D12A D12B
	04	E01A E01B E02A
		E02B E02C E06A
		E06B E06C
	05	F21A F21B F21C
	06	G12A G12B
	07	H12A H12B H33Z
	08	I28A I28B
	09	J02A J02B J03A
		J03B J04Z J11A
		J11B J21Z J23A
		J23B J24A J24B
		J25Z
	10	K09A K09B
	11	L09A L09B L33Z
	12	M09A M09B M37Z
	13	N01D N02A N02B
		N04A N04B N06A
		N06B N06C N23A
		N23B N33Z
	14	O02A O02B
	16	Q03Z
	21B	X04Z X05Z X06A
		X06B X06C
	22	Y02A Y02B Y02C
40.22.99↔		VB
	01	B17A
	03	D12A D12B
	04	E01A E01B E02A
		E02B E02C E06A
		E06B E06C
	05	F21A F21B F21C
	06	G12A G12B
	07	H12A H12B H33Z
	08	I28A I28B
	09	J02A J02B J03A
		J03B J04Z J11A
		J11B J21Z J23A
		J23B J24A J24B
		J25Z
	10	K09A K09B
	11	L09A L09B L33Z
	12	M09A M09B M37Z
	13	N01D N02A N02B
		N04A N04B N06A
		N06B N06C N23A
		N23B N33Z
	14	O02A O02B
	16	Q03Z
	21B	X04Z X05Z X06A
		X06B X06C
	22	Y02A Y02B Y02C
40.23.10↔		VB
	01	B17A
	03	D12A D12B
	04	E01A E01B E02A
		E02B E02C E06A
		E06B E06C
	05	F21A F21B F21C
	06	G12A G12B
	07	H12A H12B H33Z
	08	I28A I28B
	09	J02A J02B J03A
		J03B J04Z J11A
		J11B J21Z J23A
		J23B J24A J24B
		J25Z
	10	K09A K09B
	11	L09A L09B L33Z
	12	M09A M09B M37Z
	13	N01D N02A N02B
		N04A N04B N06A
		N06B N06C N23A
		N23B N33Z
	14	O02A O02B
	16	Q03Z
	21B	X04Z X05Z X06A
		X06B X06C
	22	Y02A Y02B Y02C
40.23.11↔	03	D12A D12B
	04	E02A E02B E02C
	06	G12A G12B
	08	I28A I28B
	09	J01A J01B J02A
		J02B J03A J03B
		J04Z J11A J11B
		J21Z J23A J23B
		J24A J24B J25Z
	10	K09A K09B

PROC

PROC

CHOP	MDC	DRG
	11	L09A L09B
	12	M06Z M09A M09B
		M37Z
	13	N01D N02A N02B
		N04A N04B N06A
		N06B N06C N23A
		N23B N33Z
	14	O02A O02B
	16	Q03Z
40.23.99↔		VB
	01	B17A
	03	D12A D12B
	04	E01A E01B E02A
		E02B E02C E06A
		E06B E06C
	05	F21A F21B F21C
	06	G12A G12B
	07	H12A H12B H33Z
	08	I28A I28B
	09	J02A J02B J03A
		J03B J04Z J11A
		J11B J21Z J23A
		J23B J24A J24B
		J25Z
	10	K09A K09B
	11	L09A L09B L33Z
	12	M09A M09B M37Z
	13	N01D N02A N02B
		N04A N04B N06A
		N06B N06C N23A
		N23B N33Z
	14	O02A O02B
	16	Q03Z
	21B	X04Z X05Z X06A
		X06B X06C
	22	Y02A Y02B Y02C
40.24.10↔		VB
	01	B17A
	03	D12A D12B
	04	E01A E01B E02A
		E02B E02C E06A
		E06B E06C
	05	F21A F21B F21C
	06	G12A G12B
	07	H12A H12B H33Z
	08	I28A I28B
	09	J02A J02B J03A
		J03B J04Z J11A
		J11B J21Z J23A
		J23B J24A J24B
		J25Z
	10	K09A K09B
	11	L09A L09B L33Z
	12	M09A M09B M37Z
	13	N01D N02A N02B
		N04A N04B N06A
		N06B N06C N23A
		N23B N33Z
	14	O02A O02B
	16	Q03Z
	21B	X04Z X05Z X06A
		X06B X06C
	22	Y02A Y02B Y02C
40.24.11↔	03	D12A D12B
	04	E02A E02B E02C
	06	G12A G12B
	08	I28A I28B
	09	J01A J01B J02A
		J02B J03A J03B
		J04Z J11A J11B

CHOP	MDC	DRG
		J21Z J23A J23B
		J24A J24B J25Z
	10	K09A K09B
	11	L09A L09B
	12	M06Z M09A M09B
		M37Z
	13	N01D N02A N02B
		N04A N04B N06A
		N06B N06C N23A
		N23B N33Z
	14	O02A O02B
	16	Q03Z
40.24.20↔		VB
	01	B17A
	03	D12A D12B
	04	E01A E01B E02A
		E02B E02C E06A
		E06B E06C
	05	F21A F21B F21C
	06	G12A G12B
	07	H12A H12B H33Z
	08	I28A I28B
	09	J02A J02B J03A
		J03B J04Z J11A
		J11B J21Z J23A
		J23B J24A J24B
		J25Z
	10	K09A K09B
	11	L09A L09B L33Z
	12	M09A M09B M37Z
	13	N01D N02A N02B
		N04A N04B N06A
		N06B N06C N23A
		N23B N33Z
	14	O02A O02B
	16	Q03Z
	21B	X04Z X05Z X06A
		X06B X06C
	22	Y02A Y02B Y02C
40.24.99↔		VB
	01	B17A
	03	D12A D12B
	04	E01A E01B E02A
		E02B E02C E06A
		E06B E06C
	05	F21A F21B F21C
	06	G12A G12B
	07	H12A H12B H33Z
	08	I28A I28B
	09	J02A J02B J03A
		J03B J04Z J11A
		J11B J21Z J23A
		J23B J24A J24B
		J25Z
	10	K09A K09B
	11	L09A L09B L33Z
	12	M09A M09B M37Z
	13	N01D N02A N02B
		N04A N04B N06A
		N06B N06C N23A
		N23B N33Z
	14	O02A O02B
	16	Q03Z
	21B	X04Z X05Z X06A
		X06B X06C
	22	Y02A Y02B Y02C
40.29.11↔		VB
	01	B17A
	03	D12A D12B
	04	E01A E01B E02A

CHOP	MDC	DRG
		E02B E02C E06A
		E06B E06C
	05	F21A F21B F21C
	06	G12A G12B
	07	H12A H12B H33Z
	08	I28A I28B
	09	J02A J02B J03A
		J03B J04Z J11A
		J11B J21Z J23A
		J23B J24A J24B
		J25Z
	10	K09A K09B
	11	L09A L09B L33Z
	12	M09A M09B M37Z
	13	N01D N02A N02B
		N04A N04B N06A
		N06B N06C N23A
		N23B N33Z
	14	O02A O02B
	16	Q03Z
	21B	X04Z X05Z X06A
		X06B X06C
	22	Y02A Y02B Y02C
40.29.12↔		VB
	01	B17A
	03	D12A D12B
	04	E01A E01B E02A
		E02B E02C E06A
		E06B E06C
	05	F21A F21B F21C
	06	G12A G12B
	07	H12A H12B H33Z
	08	I28A I28B
	09	J02A J02B J03A
		J03B J04Z J11A
		J11B J21Z J23A
		J23B J24A J24B
		J25Z
	10	K09A K09B
	11	L09A L09B L33Z
	12	M09A M09B M37Z
	13	N01D N02A N02B
		N04A N04B N06A
		N06B N06C N23A
		N23B N33Z
	14	O02A O02B
	16	Q03Z
	21B	X04Z X05Z X06A
		X06B X06C
	22	Y02A Y02B Y02C
40.29.19↔		VB
	01	B17A
	03	D12A D12B
	04	E01A E01B E02A
		E02B E02C E06A
		E06B E06C
	05	F21A F21B F21C
	06	G12A G12B
	07	H12A H12B H33Z
	08	I28A I28B
	09	J02A J02B J03A
		J03B J04Z J11A
		J11B J21Z J23A
		J23B J24A J24B
		J25Z
	10	K09A K09B
	11	L09A L09B L33Z
	12	M09A M09B M37Z
	13	N01D N02A N02B
		N04A N04B N06A

CHOP	MDC	DRG
		N06B N06C N23A
		N23B N33Z
	14	O02A O02B
	16	Q03Z
	21B	X04Z X05Z X06A
		X06B X06C
	22	Y02A Y02B Y02C
40.29.20↔		VB
	01	B17A
	03	D12A D12B
	04	E01A E01B E02A
		E02B E02C E06A
		E06B E06C
	05	F21A F21B F21C
	06	G12A G12B
	07	H12A H12B H33Z
	08	I28A I28B
	09	J02A J02B J03A
		J03B J04Z J11A
		J11B J21Z J23A
		J23B J24A J24B
		J25Z
	10	K09A K09B
	11	L09A L09B L33Z
	12	M09A M09B M37Z
	13	N01D N02A N02B
		N04A N04B N06A
		N06B N06C N23A
		N23B N33Z
	14	O02A O02B
	16	Q03Z
	21B	X04Z X05Z X06A
		X06B X06C
	22	Y02A Y02B Y02C
40.29.30↔		VB
	01	B17A
	03	D12A D12B
	04	E01A E01B E02A
		E02B E02C E06A
		E06B E06C
	05	F21A F21B F21C
	06	G12A G12B
	07	H12A H12B H33Z
	08	I28A I28B
	09	J02A J02B J03A
		J03B J04Z J11A
		J11B J21Z J23A
		J23B J24A J24B
		J25Z
	10	K09A K09B
	11	L09A L09B L33Z
	12	M09A M09B M37Z
	13	N01D N02A N02B
		N04A N04B N06A
		N06B N06C N23A
		N23B N33Z
	14	O02A O02B
	16	Q03Z
	21B	X04Z X05Z X06A
		X06B X06C
	22	Y02A Y02B Y02C
40.29.70↔		VB
	01	B17A
	03	D12A D12B
	04	E01A E01B E02A
		E02B E02C E06A
		E06B E06C
	05	F21A F21B F21C
	06	G12A G12B
	07	H12A H12B H33Z
	08	I28A I28B
	09	J02A J02B J03A
		J03B J04Z J11A
		J11B J21Z J23A
		J23B J24A J24B
		J25Z
	10	K09A K09B
	11	L09A L09B L33Z
	12	M09A M09B M37Z
	13	N01D N02A N02B
		N04A N04B N06A
		N06B N06C N23A
		N23B N33Z
	14	O02A O02B
	16	Q03Z
	21B	X04Z X05Z X06A
		X06B X06C
	22	Y02A Y02B Y02C
40.29.81↔		VB
	01	B17A
	03	D12A D12B
	04	E01A E01B E02A
		E02B E02C E06A
		E06B E06C
	05	F21A F21B F21C
	06	G12A G12B
	07	H12A H12B H33Z
	08	I28A I28B
	09	J02A J02B J03A
		J03B J04Z J11A
		J11B J21Z J23A
		J23B J24A J24B
		J25Z
	10	K09A K09B
	11	L09A L09B L33Z
	12	M09A M09B M37Z
	13	N01D N02A N02B
		N04A N04B N06A
		N06B N06C N23A
		N23B N33Z
	14	O02A O02B
	16	Q03Z
	21B	X04Z X05Z X06A
		X06B X06C
	22	Y02A Y02B Y02C
40.29.82↔		VB
	01	B17A
	03	D12A D12B
	04	E01A E01B E02A
		E02B E02C E06A
		E06B E06C
	05	F21A F21B F21C
	06	G12A G12B
	07	H12A H12B H33Z
	08	I28A I28B
	09	J02A J02B J03A
		J03B J04Z J11A
		J11B J21Z J23A
		J23B J24A J24B
		J25Z
	10	K09A K09B
	11	L09A L09B L33Z
	12	M09A M09B M37Z
	13	N01D N02A N02B
		N04A N04B N06A
		N06B N06C N23A
		N23B N33Z
	14	O02A O02B
	16	Q03Z
	21B	X04Z X05Z X06A
		X06B X06C
	22	Y02A Y02B Y02C
40.29.89↔		VB
	01	B17A
	03	D12A D12B
	04	E01A E01B E02A
		E02B E02C E06A
		E06B E06C
	05	F21A F21B F21C
	06	G12A G12B
	07	H12A H12B H33Z
	08	I28A I28B
	09	J02A J02B J03A
		J03B J04Z J11A
		J11B J21Z J23A
		J23B J24A J24B
		J25Z
	10	K09A K09B
	11	L09A L09B L33Z
	12	M09A M09B M37Z
	13	N01D N02A N02B
		N04A N04B N06A
		N06B N06C N23A
		N23B N33Z
	14	O02A O02B
	16	Q03Z
	21B	X04Z X05Z X06A
		X06B X06C
	22	Y02A Y02B Y02C
40.29.99↔		VB
	01	B17A
	03	D12A D12B
	04	E01A E01B E02A
		E02B E02C E06A
		E06B E06C
	05	F21A F21B F21C
	06	G12A G12B
	07	H12A H12B H33Z
	08	I28A I28B
	09	J02A J02B J03A
		J03B J04Z J11A
		J11B J21Z J23A
		J23B J24A J24B
		J25Z
	10	K09A K09B
	11	L09A L09B L33Z
	12	M09A M09B M37Z
	13	N01D N02A N02B
		N04A N04B N06A
		N06B N06C N23A
		N23B N33Z
	14	O02A O02B
	16	Q03Z
	21B	X04Z X05Z X06A
		X06B X06C
	22	Y02A Y02B Y02C
40.3X.11↔	01	B17A B17B
	03	D12A
	04	E02A E02B E02C
	06	G12A G12B
	08	I28A I28B
	09	J01A J01B J02A
		J02B J03A J03B
		J04Z J11A J11B
		J21Z J23A J23B
	10	K09A K09B
	11	L09A L09B L13A
		L13B L13C L38Z
	12	M06Z M09A M09B
		M37Z

PROC

CHOP	MDC	DRG
	13	N01A N01B N01C
		N01D N02A N02B
		N04A N04B N06A
		N06B N06C N33Z
	14	O02A O02B
	16	Q03Z
	17	R61D R65A R65B
40.3X.12↔	01	B17A B17B
	03	D12A
	04	E02A E02B E02C
	06	G12A G12B
	08	I28A I28B
	09	J01A J01B J02A
		J02B J03A J03B
		J04Z J11A J11B
		J21Z J23A J23B
	10	K09A K09B
	11	L09A L09B L13A
		L13B L13C L38Z
	12	M06Z M09A M09B
		M37Z
	13	N01A N01B N01C
		N01D N02A N02B
		N04A N04B N06A
		N06B N06C N33Z
	14	O02A O02B
	16	Q03Z
	17	R61D R65A R65B
40.3X.13↔	01	B17A B17B
	03	D12A
	04	E02A E02B E02C
	06	G12A G12B
	08	I28A I28B
	09	J01A J01B J02A
		J02B J03A J03B
		J04Z J11A J11B
		J21Z J23A J23B
	10	K09A K09B
	11	L09A L09B L13A
		L13B L13C L38Z
	12	M06Z M09A M09B
		M37Z
	13	N01A N01B N01C
		N01D N02A N02B
		N04A N04B N06A
		N06B N06C N33Z
	14	O02A O02B
	16	Q03Z
	17	R61D R65A R65B
40.3X.14↔	01	B17A B17B
	03	D12A
	04	E02A E02B E02C
	06	G12A G12B
	08	I28A I28B
	09	J01A J01B J02A
		J02B J03A J03B
		J04Z J11A J11B
		J21Z J23A J23B
	10	K09A K09B
	11	L09A L09B L13A
		L13B L13C L38Z
	12	M06Z M09A M09B
		M37Z
	13	N01A N01B N01C
		N01D N02A N02B
		N04A N04B N06A
		N06B N06C N33Z
	14	O02A O02B
	16	Q03Z
	17	R61D R65A R65B
40.3X.15↔	01	B17A B17B
	03	D12A
	04	E02A E02B E02C
	06	G12A G12B
	08	I28A I28B
	09	J01A J01B J02A
		J02B J03A J03B
		J04Z J11A J11B
		J21Z J23A J23B
	10	K09A K09B
	11	L09A L09B L13A
		L13B L13C L38Z
	12	M06Z M09A M09B
		M37Z
	13	N01A N01B N01C
		N01D N02A N02B
		N04A N04B N06A
		N06B N06C N33Z
	14	O02A O02B
	16	Q03Z
	17	R61D R65A R65B
40.3X.16↔	01	B17A B17B
	03	D12A
	04	E02A E02B E02C
	06	G12A G12B
	08	I28A I28B
	09	J01A J01B J02A
		J02B J03A J03B
		J04Z J11A J11B
		J21Z J23A J23B
	10	K09A K09B
	11	L09A L09B L13A
		L13B L13C L38Z
	12	M06Z M09A M09B
		M37Z
	13	N01A N01B N01C
		N01D N02A N02B
		N04A N04B N06A
		N06B N06C N33Z
	14	O02A O02B
	16	Q03Z
	17	R61D R65A R65B
40.3X.19↔	01	B17A B17B
	03	D12A
	04	E02A E02B E02C
	06	G12A G12B
	08	I28A I28B
	09	J01A J01B J02A
		J02B J03A J03B
		J04Z J11A J11B
		J21Z J23A J23B
	10	K09A K09B
	11	L09A L09B L13A
		L13B L13C L38Z
	12	M06Z M09A M09B
		M37Z
	13	N01A N01B N01C
		N01D N02A N02B
		N04A N04B N06A
		N06B N06C N33Z
	14	O02A O02B
	16	Q03Z
	17	R61D R65A R65B
40.3X.21↔	01	B17A B17B
	03	D12A
	04	E02A E02B E02C
	06	G12A G12B
	08	I28A I28B
	09	J01A J01B J02A
		J02B J03A J03B
		J04Z J11A J11B
		J21Z J23A J23B
	10	K09A K09B
	11	L09A L09B L13A
		L13B L13C L38Z
	12	M06Z M09A M09B
		M37Z
	13	N01A N01B N01C
		N01D N02A N02B
		N04A N04B N06A
		N06B N06C N33Z
	14	O02A O02B
	16	Q03Z
	17	R61D R65A R65B
40.3X.22↔	01	B17A B17B
	03	D12A
	04	E02A E02B E02C
	06	G12A G12B
	08	I28A I28B
	09	J01A J01B J02A
		J02B J03A J03B
		J04Z J11A J11B
		J21Z J23A J23B
	10	K09A K09B
	11	L09A L09B L13A
		L13B L13C L38Z
	12	M06Z M09A M09B
		M37Z
	13	N01A N01B N01C
		N01D N02A N02B
		N04A N04B N06A
		N06B N06C N33Z
	14	O02A O02B
	16	Q03Z
	17	R61D R65A R65B
40.3X.23↔	01	B17A B17B
	03	D12A
	04	E02A E02B E02C
	06	G12A G12B
	08	I28A I28B
	09	J01A J01B J02A
		J02B J03A J03B
		J04Z J11A J11B
		J21Z J23A J23B
	10	K09A K09B
	11	L09A L09B L13A
		L13B L13C L38Z
	12	M06Z M09A M09B
		M37Z
	13	N01A N01B N01C
		N01D N02A N02B
		N04A N04B N06A
		N06B N06C N33Z
	14	O02A O02B
	16	Q03Z
	17	R61D R65A R65B
40.3X.24↔	01	B17A B17B
	03	D12A
	04	E02A E02B E02C
	06	G12A G12B
	08	I28A I28B
	09	J01A J01B J02A
		J02B J03A J03B
		J04Z J11A J11B
		J21Z J23A J23B
	10	K09A K09B
	11	L09A L09B L13A
		L13B L13C L38Z
	12	M06Z M09A M09B
		M37Z

CHOP	MDC	DRG
	13	N01A N01B N01C N01D N02A N02B N04A N04B N06A N06B N06C N33Z
	14	O02A O02B
	16	Q03Z
	17	R61D R65A R65B
40.3X.25↔	01	B17A B17B
	03	D12A
	04	E02A E02B E02C
	06	G12A G12B
	08	I28A I28B
	09	J01A J01B J02A J02B J03A J03B J04Z J11A J11B J21Z J23A J23B
	10	K09A K09B
	11	L09A L09B L13A L13B L13C L38Z
	12	M06Z M09A M09B M37Z
	13	N01A N01B N01C N01D N02A N02B N04A N04B N06A N06B N06C N33Z
	14	O02A O02B
	16	Q03Z
	17	R61D R65A R65B
40.3X.26↔	01	B17A B17B
	03	D12A
	04	E02A E02B E02C
	06	G12A G12B
	08	I28A I28B
	09	J01A J01B J02A J02B J03A J03B J04Z J11A J11B J21Z J23A J23B
	10	K09A K09B
	11	L09A L09B L13A L13B L13C L38Z
	12	M06Z M09A M09B M37Z
	13	N01A N01B N01C N01D N02A N02B N04A N04B N06A N06B N06C N33Z
	14	O02A O02B
	16	Q03Z
	17	R61D R65A R65B
40.3X.29↔	01	B17A B17B
	03	D12A
	04	E02A E02B E02C
	06	G12A G12B
	08	I28A I28B
	09	J01A J01B J02A J02B J03A J03B J04Z J11A J11B J21Z J23A J23B
	10	K09A K09B
	11	L09A L09B L13A L13B L13C L38Z
	12	M06Z M09A M09B M37Z
	13	N01A N01B N01C N01D N02A N02B N04A N04B N06A N06B N06C N33Z
	14	O02A O02B
	16	Q03Z
	17	R61D R65A R65B

CHOP	MDC	DRG
40.41.10↔		BORP KORP MBOR MKOR VAC VAC I VAC II VBOR VKOR
	03	D02A D02B D24A D24B D24C D25A D25B D28Z D29Z
	04	E02A E02B E36A E36B
	06	G12A G16A G38A G38B
	09	J02A J02B J03A J03B J04Z J08Z J10A J10B J21Z
	10	K06A K14A K14B
	17	R01A R01B
	Prä	A97A A97B A97C A97D
40.41.11↔		BORP KORP MBOR MKOR VAC VAC I VAC II VBOR VKOR
	03	D02A D02B D24A D24B D24C D25A D25B D28Z D29Z
	04	E02A E02B E36A E36B
	06	G12A G16A G38A G38B
	09	J02A J02B J03A J03B J04Z J08Z J10A J10B J21Z
	10	K06A K14A K14B
	17	R01A R01B
	Prä	A97A A97B A97C A97D
40.41.12↔		BORP KORP MBOR MKOR VAC VAC I VAC II VBOR VKOR
	03	D02A D02B D24A D24B D24C D25A D25B D28Z D29Z
	04	E02A E02B E36A E36B
	06	G12A G16A G38A G38B
	09	J02A J02B J03A J03B J04Z J08Z J10A J10B J21Z
	10	K06A K14A K14B
	17	R01A R01B
	Prä	A97A A97B A97C A97D
40.41.13↔		BORP KORP MBOR MKOR VAC VAC I VAC II VBOR VKOR
	03	D02A D02B D24A D24B D24C D25A D25B D28Z D29Z
	04	E02A E02B E36A E36B
	06	G12A G16A G38A G38B
	09	J02A J02B J03A J03B J04Z J08Z J10A J10B J21Z
	10	K06A K14A K14B
	17	R01A R01B
	Prä	A97A A97B A97C A97D
40.41.14↔		BORP KORP MBOR MKOR VAC VAC I VAC II VBOR VKOR
	03	D02A D02B D24A D24B D24C D25A D25B D28Z D29Z
	04	E02A E02B E36A E36B
	06	G12A G16A G38A G38B
	09	J02A J02B J03A J03B J04Z J08Z J10A J10B J21Z
	10	K06A K14A K14B
	17	R01A R01B
	Prä	A97A A97B A97C A97D
40.41.20↔		BORP KORP MBOR MKOR VAC VAC I VAC II VBOR VKOR
	03	D02A D02B D24A D24B D24C D25A D25B D28Z D29Z
	04	E02A E02B E36A E36B
	06	G12A G16A G38A G38B
	09	J02A J02B J03A J03B J04Z J08Z J10A J10B J21Z
	10	K06A K14A K14B
	17	R01A R01B
	Prä	A97A A97B A97C A97D
40.41.21↔		BORP KORP MBOR MKOR VAC VAC I VAC II VBOR VKOR
	03	D02A D02B D24A D24B D24C D25A D25B D28Z D29Z
	04	E02A E02B E36A E36B
	06	G12A G16A G38A G38B
	09	J02A J02B J03A J03B J04Z J08Z J10A J10B J21Z
	10	K06A K14A K14B
	17	R01A R01B
	Prä	A97A A97B A97C A97D
40.41.99↔		BORP KORP MBOR MKOR VAC VAC I VAC II VBOR VKOR
	03	D02A D02B D24A D24B D24C D25A D25B D28Z D29Z
	04	E02A E02B E36A E36B
	06	G12A G16A G38A G38B
	09	J02A J02B J03A J03B J04Z J08Z J10A J10B J21Z
	10	K06A K14A K14B
	17	R01A R01B
	Prä	A97A A97B A97C A97D
40.51.10↔		BORP MBOR VAC VAC I VAC II VBOR
	04	E01A E01B E06A E06B E06C E36A

PROC

PROC

CHOP	MDC	DRG
		E36B
	06	G12A G12B G16A G33Z G38A G38B G38C
	07	H33Z
	08	I28A I28B
	09	J01A J01B J02A J02B J03A J03B J04Z J10A J10B J21Z J23A J23B J24A J24B J25Z
	11	L13B L33Z
40.51.11↔		BORP MBOR VAC VAC I VAC II VBOR
	04	E01A E01B E06A E06B E06C E36A E36B
	06	G12A G12B G16A G38A G38B
	07	H33Z
	08	I28A I28B
	09	J01A J01B J02A J02B J03A J03B J04Z J10A J10B J21Z J23A J23B J24A J24B J25Z
	11	L13A L33Z L38Z
40.51.99↔		BORP MBOR VAC VAC I VAC II VBOR
	04	E01A E01B E06A E06B E06C E36A E36B
	06	G12A G12B G16A G38A G38B
	07	H33Z
	08	I28A I28B
	09	J01A J01B J02A J02B J03A J03B J04Z J10A J10B J21Z J23A J23B J24A J24B J25Z
	11	L13B L33Z
40.52.10↔		BORP MBOR VAC VAC I VAC II VBOR
	04	E01A E01B E06A E06B E06C E36A E36B
	06	G12A G12B G16A G33Z G38A G38B G38C
	07	H33Z
	08	I28A I28B
	09	J02A J02B J03A J03B J04Z J10A J10B J21Z
	10	K09A K09B
	11	L03Z L04A L04B L10A L10B L13A L13B L33Z L38Z
	12	M01Z M09A M37Z
	13	N01D N02A N02B N04A N04B N06A N06B N06C N33Z
	17	R01A R01B
	Prä	A97A A97B A97C A97D
40.52.11↔		BORP MBOR VAC VAC I VAC II VBOR
	04	E01A E01B E06A E06B E06C E36A

CHOP	MDC	DRG
		E36B
	06	G12A G12B G16A G38A G38B
	07	H33Z
	08	I28A I28B
	09	J02A J02B J03A J03B J04Z J10A J10B J21Z
	10	K09A K09B
	11	L03Z L04A L04B L10A L10B L13A L13B L13C L33Z L38Z
	12	M01Z M09A M37Z
	13	N01A N01B N01C N01D N02A N02B N04A N04B N06A N06B N06C N33Z
	17	R01A R01B
	Prä	A97A A97B A97C A97D
40.52.99↔		BORP MBOR VAC VAC I VAC II VBOR
	04	E01A E01B E06A E06B E06C E36A E36B
	06	G12A G12B G16A G38A G38B
	07	H33Z
	08	I28A I28B
	09	J02A J02B J03A J03B J04Z J10A J10B J21Z
	10	K09A K09B
	11	L03Z L04A L04B L10A L10B L13A L13B L33Z L38Z
	12	M01Z M09A M37Z
	13	N01D N02A N02B N04A N04B N06A N06B N06C N33Z
	17	R01A R01B
	Prä	A97A A97B A97C A97D
40.53.10↔		BORP MBOR VAC VAC I VAC II VBOR
	04	E01A E01B E06A E06B E06C E36A E36B
	06	G12A G12B G16A G33Z G38A G38B G38C
	07	H33Z
	08	I28A I28B
	09	J02A J02B J03A J03B J04Z J10A J10B J21Z
	10	K09A K09B
	11	L03Z L04A L04B L10A L10B L13A L13B L33Z L38Z
	12	M01Z M09A M37Z
	13	N01D N02A N02B N04A N04B N06A N06B N06C N33Z
	17	R01A R01B
	Prä	A97A A97B A97C A97D
40.53.11↔		BORP MBOR VAC VAC I VAC II VBOR

CHOP	MDC	DRG
	04	E01A E01B E06A E06B E06C E36A E36B
	06	G12A G12B G16A G38A G38B
	07	H33Z
	08	I28A I28B
	09	J02A J02B J03A J03B J04Z J10A J10B J21Z
	10	K09A K09B
	11	L03Z L04A L04B L10A L10B L13A L13B L13C L33Z L38Z
	12	M01Z M09A M37Z
	13	N01A N01B N01C N01D N02A N02B N04A N04B N06A N06B N06C N33Z
	17	R01A R01B
	Prä	A97A A97B A97C A97D
40.53.99↔		BORP MBOR VAC VAC I VAC II VBOR
	04	E01A E01B E06A E06B E06C E36A E36B
	06	G12A G12B G16A G38A G38B
	07	H33Z
	08	I28A I28B
	09	J02A J02B J03A J03B J04Z J10A J10B J21Z
	10	K09A K09B
	11	L03Z L04A L04B L10A L10B L13A L13B L33Z L38Z
	12	M01Z M09A M37Z
	13	N01D N02A N02B N04A N04B N06A N06B N06C N33Z
	17	R01A R01B
	Prä	A97A A97B A97C A97D
40.54.10↔		BORP MBOR VAC VAC I VAC II VBOR
	04	E36A E36B
	06	G12A G12B G16A G33Z G38A G38B G38C
	07	H33Z
	08	I28A I28B
	09	J02A J02B J03A J03B J04Z J10A J10B J21Z
	11	L03Z L04A L04B L10A L10B L13A L13B L33Z L38Z
	12	M01Z M09A M37Z
	13	N01D N02A N02B N04A N04B N06A N06B N06C N33Z
	17	R01A R01B
	Prä	A97A A97B A97C A97D
40.54.11↔		BORP MBOR VAC VAC I VAC II VBOR
	04	E36A E36B

CHOP	MDC	DRG
	06	G12A G12B G16A G38A G38B
	07	H33Z
	08	I28A I28B
	09	J02A J02B J03A J03B J04Z J10A J10B J21Z
	11	L03Z L04A L04B L10A L10B L13A L13B L13C L33Z L38Z
	12	M01Z M09A M37Z
	13	N01A N01B N01C N01D N02A N02B N04A N04B N06A N06B N06C N33Z
	17	R01A R01B
	Prä	A97A A97B A97C A97D
40.54.99↔		BORP MBOR VAC VAC I VAC II VBOR
	04	E36A E36B
	06	G12A G12B G16A G38A G38B
	07	H33Z
	08	I28A I28B
	09	J02A J02B J03A J03B J04Z J10A J10B J21Z
	11	L03Z L04A L04B L10A L10B L13A L13B L33Z L38Z
	12	M01Z M09A M37Z
	13	N01D N02A N02B N04A N04B N06A N06B N06C N33Z
	17	R01A R01B
	Prä	A97A A97B A97C A97D
40.59.11↔		BORP MBOR VAC VAC I VAC II VBOR
	04	E01A E01B E06A E06B E06C E36A E36B
	06	G12A G12B G16A G33Z G38A G38B G38C
	07	H33Z
	08	I28A I28B
	09	J02A J02B J03A J03B J04Z J10A J10B J21Z
	10	K09A K09B
	11	L03Z L04A L04B L10A L10B L13A L13B L33Z L38Z
	12	M01Z M09A M37Z
	13	N01D N02A N02B N04A N04B N06A N06B N06C N33Z
	17	R01A R01B
	Prä	A97A A97B A97C A97D
40.59.12↔		BORP MBOR VAC VAC I VAC II VBOR
	04	E01A E01B E06A E06B E06C E36A E36B
	06	G12A G12B G16A G33Z G38A G38B G38C
	07	H33Z
	08	I28A I28B
	09	J02A J02B J03A J03B J04Z J10A J10B J21Z
	10	K09A K09B
	11	L03Z L04A L04B L10A L10B L13A L13B L33Z L38Z
	12	M01Z M09A M37Z
	13	N01D N02A N02B N04A N04B N06A N06B N06C N33Z
	17	R01A R01B
	Prä	A97A A97B A97C A97D
40.59.19↔		BORP MBOR VAC VAC I VAC II VBOR
	04	E01A E01B E06A E06B E06C E36A E36B
	06	G12A G12B G16A G33Z G38A G38B G38C
	07	H33Z
	08	I28A I28B
	09	J02A J02B J03A J03B J04Z J10A J10B J21Z
	10	K09A K09B
	11	L03Z L04A L04B L10A L10B L13A L13B L33Z L38Z
	12	M01Z M09A M37Z
	13	N01D N02A N02B N04A N04B N06A N06B N06C N33Z
	17	R01A R01B
	Prä	A97A A97B A97C A97D
40.59.21↔		BORP MBOR VAC VAC I VAC II VBOR
	04	E01A E01B E06A E06B E06C E36A E36B
	06	G12A G12B G16A G38A G38B
	07	H33Z
	08	I28A I28B
	09	J02A J02B J03A J03B J04Z J10A J10B J21Z
	10	K09A K09B
	11	L03Z L04A L04B L10A L10B L13A L13B L13C L33Z L38Z
	12	M01Z M09A M37Z
	13	N01A N01B N01C N01D N02A N02B N04A N04B N06A N06B N06C N33Z
	17	R01A R01B
	Prä	A97A A97B A97C A97D
40.59.22↔		BORP MBOR VAC VAC I VAC II VBOR
	04	E01A E01B E06A E06B E06C E36A E36B
	06	G12A G12B G16A G38A G38B
	07	H33Z
	08	I28A I28B
	09	J02A J02B J03A J03B J04Z J10A J10B J21Z
	10	K09A K09B
	11	L03Z L04A L04B L10A L10B L13A L13B L33Z L38Z
	12	M01Z M09A M37Z
	13	N01A N01B N01C N01D N02A N02B N04A N04B N06A N06B N06C N33Z
	17	R01A R01B
	Prä	A97A A97B A97C A97D
40.59.29↔		BORP MBOR VAC VAC I VAC II VBOR
	04	E01A E01B E06A E06B E06C E36A E36B
	06	G12A G12B G16A G38A G38B
	07	H33Z
	08	I28A I28B
	09	J02A J02B J03A J03B J04Z J10A J10B J21Z
	10	K09A K09B
	11	L03Z L04A L04B L10A L10B L13A L13B L13C L33Z L38Z
	12	M01Z M09A M37Z
	13	N01A N01B N01C N01D N02A N02B N04A N04B N06A N06B N06C N33Z
	17	R01A R01B
	Prä	A97A A97B A97C A97D
40.59.99↔		BORP MBOR VAC VAC I VAC II VBOR
	04	E36A E36B
	06	G12A G12B G16A G38A G38B
	07	H33Z
	08	I28A I28B
	09	J02A J02B J03A J03B J04Z J10A J10B J21Z
	10	K09A K09B
	11	L03Z L04A L04B L10A L10B L13A L13B L13C L33Z L38Z
	12	M01Z M09A M37Z
	13	N01A N01B N01C N01D N02A N02B N04A N04B N06A N06B N06C N33Z
	17	R01A R01B
	Prä	A97A A97B A97C A97D
40.62↔		BORP MBOR VAC VAC I VAC II VBOR
	04	E36A E36B

PROC

CHOP	MDC	DRG
	06	G12A G16A G33Z G38A G38B G38C
	07	H33Z
	11	L33Z
	21B	X06A X06B X06C
40.63↔		BORP MBOR VAC VAC I VAC II VBOR
	04	E36A E36B
	06	G12A G16A G33Z G38A G38B G38C
	07	H33Z
	11	L33Z
	21B	X06A X06B X06C
40.64↔		BORP MBOR VAC VAC I VAC II VBOR
	04	E36A E36B
	06	G12A G16A G33Z G38A G38B G38C
	07	H33Z
	11	L33Z
	21B	X06A X06B X06C
40.69↔	06	G33Z G38A G38B G38C
	07	H33Z
	11	L33Z
	21B	X06A X06B X06C
40.71.11↔		BORP KORP MBOR MKOR VAC VB VBOR VKOR
	03	D02A D02B D24A D24B
	04	E02A E02B E02C E36A E36B
	05	F04Z F13A F13B F13C
	06	G12A G12B G16A G38A G38B
	08	I02A I02B I02C I28A I28B
	09	J01A J01B J02A J02B J03A J03B J04Z J11A J11B J14Z
	10	K09A K09B
	11	L09A L09B
	12	M06Z M09A M09B M37Z
	16	Q03Z
	21A	W01A W01B
	21B	X01A X06A X06B X06C X07A X07B
	22	Y02A Y02B
40.71.21↔		BORP KORP MBOR MKOR VAC VB VBOR VKOR
	03	D02A D02B D24A D24B
	04	E02A E02B E02C E36A E36B
	05	F04Z F13A F13B F13C
	06	G12A G12B G16A G38A G38B
	08	I02A I02B I02C I28A I28B
	09	J01A J01B J02A J02B J03A J03B J04Z J11A J11B
	10	K09A K09B
	11	L09A L09B
	12	M06Z M09A M09B M37Z
	16	Q03Z
	21A	W01A W01B
	21B	X01A X06A X06B X06C X07A X07B
	22	Y02A Y02B
40.71.31↔		BORP KORP MBOR MKOR VAC VB VBOR VKOR
	03	D02A D02B D24A D24B
	04	E02A E02B E02C E36A E36B
	05	F04Z F13A F13B F13C
	06	G12A G12B G16A G38A G38B
	08	I02A I02B I02C I28A I28B
	09	J01A J01B J02A J02B J03A J03B J04Z J11A J11B
	10	K09A K09B
	11	L09A L09B
	12	M06Z M09A M09B M37Z
	16	Q03Z
	21B	X06A X06B X06C
40.79↔		BORP MBOR VAC VBOR
	03	D12A D12B
	04	E02A E02B E02C E36A E36B
	05	F04Z F13A F13B F13C
	06	G12A G12B G16A G38A G38B
	08	I28A I28B
	09	J02A J02B J03A J03B J04Z J11A J11B
	10	K09A K09B
	11	L09A L09B
	12	M06Z M09A M09B M37Z
	16	Q03Z
	21B	X06A X06B X06C
40.9X.20↔		BORP MBOR VAC VBOR
	03	D12A
	04	E02A E02B E02C E36A E36B
	05	F04Z F13A F13B F13C
	06	G12A G12B G16A G38A G38B
	08	I28A I28B
	09	J02A J02B J03A J03B J04Z J11A J11B
	10	K09A K09B
	11	L09A L09B
	12	M06Z M09A M09B M37Z
	16	Q03Z
	21B	X06A X06B X06C
41.0A.09‡↔	01	B60A
	23	Z43Z
41.0A.11‡↔	Prä	A42A A42B A93A A97A A97B A97C A97D
	01	B60A
	17	R50A R60A R60B R60C R60D
41.0A.12‡↔	01	B60A
	23	Z43Z
41.0A.13‡↔	01	B60A
	23	Z43Z
41.0A.14‡↔	01	B60A
	23	Z43Z
41.0A.15‡↔	01	B60A
	23	Z43Z
41.0A.21‡↔	Prä	A42A A42B A93A A97A A97B A97C A97D
	01	B60A
	17	R50A R60A R60B R60C R60D
41.0A.22‡↔	01	B60A
	23	Z43Z
41.0A.23‡↔	01	B60A
	23	Z43Z
41.0A.24‡↔	01	B60A
	23	Z43Z
41.0A.25‡↔	01	B60A
	23	Z43Z
41.0B.09↔		BORP MBOR VAC VAC I VAC II VBOR
	04	E36A E36B
	06	G12A G16A G38A G38B
	Prä	A06A A06B A06C A07A A15A A15B A15C
41.0B.11↔		BORP MBOR VAC VAC I VAC II VBOR
	04	E36A E36B
	06	G12A G16A G38A G38B
	Prä	A06A A06B A06C A07A A15A A15B A15C
41.0B.12↔		BORP MBOR VAC VAC I VAC II VBOR
	04	E36A E36B
	06	G12A G16A G38A G38B
	Prä	A04A A04B A04C A06A A06B A06C A07A
41.0B.13↔		BORP MBOR VAC VAC I VAC II VBOR
	04	E36A E36B
	06	G12A G16A G38A G38B
	Prä	A04A A04B A04C A06A A06B A06C A07A
41.0B.14↔		BORP MBOR VAC VAC I VAC II VBOR
	04	E36A E36B
	06	G12A G16A G38A G38B
	Prä	A04A A04B A04C A06A A06B A06C A07A

CHOP	MDC	DRG
41.0B.15↔		BORP MBOR VAC VAC I VAC II VBOR
	04	E36A E36B
	06	G12A G16A G38A G38B
	Prä	A04A A04B A04C A06A A06B A06C A07A
41.0B.21↔		BORP MBOR VAC VAC I VAC II VBOR
	04	E36A E36B
	06	G12A G16A G38A G38B
	Prä	A06A A06B A06C A07A A15A A15B A15C
41.0B.22↔		BORP MBOR VAC VAC I VAC II VBOR
	04	E36A E36B
	06	G12A G16A G38A G38B
	Prä	A04A A04B A04C A06A A06B A06C A07A
41.0B.23↔		BORP MBOR VAC VAC I VAC II VBOR
	04	E36A E36B
	06	G12A G16A G38A G38B
	Prä	A04A A04B A04C A06A A06B A06C A07A
41.0B.24↔		BORP MBOR VAC VAC I VAC II VBOR
	04	E36A E36B
	06	G12A G16A G38A G38B
	Prä	A04A A04B A04C A06A A06B A06C A07A
41.0B.25↔		BORP MBOR VAC VAC I VAC II VBOR
	04	E36A E36B
	06	G12A G16A G38A G38B
	Prä	A04A A04B A04C A06A A06B A06C A07A
41.0B.31↔		BORP MBOR VAC VAC I VAC II VBOR
	04	E36A E36B
	06	G12A G16A G38A G38B
	Prä	A06A A06B A06C A07A A15A A15B A15C
41.0B.32↔		BORP MBOR VAC VBOR
	04	E36A E36B
	06	G12A G16A G38A G38B
	Prä	A04A A04B A04C A06A A06B A06C A07A
41.0B.33↔		BORP MBOR VAC VBOR
	04	E36A E36B
	06	G12A G16A G38A G38B
	Prä	A04A A04B A04C A06A A06B A06C A07A
41.0B.34↔		BORP MBOR VAC VBOR
	04	E36A E36B
	06	G12A G16A G38A G38B
	Prä	A04A A04B A04C A06A A06B A06C A07A
41.0B.35↔		BORP MBOR VAC VBOR
	04	E36A E36B
	06	G12A G16A G38A G38B
	Prä	A04A A04B A04C A06A A06B A06C A07A
41.0C.32‡↔	Prä	A42A
	01	B60A
41.0E.12‡↔	Prä	A42A A42B A93A A97A A97B A97C A97D
	01	B60A
	17	R50A R60A R60B R60C R60D
41.0E.13‡↔	Prä	A42A A42B A93A A97A A97B A97C A97D
	01	B60A
	17	R50A R60A R60B R60C R60D
41.0F.13↔		BORP MBOR VAC VAC I VAC II VBOR
	04	E36A E36B
	06	G12A G16A G38A G38B
	Prä	A06A A06B A06C A07A A15A A15B A20Z
41.0F.14↔		BORP MBOR VAC VAC I VAC II VBOR
	04	E36A E36B
	06	G12A G16A G38A G38B
	Prä	A06A A06B A06C A07A A15A A15B
41.2↔		BORP MBOR VAC VAC I VAC II VBOR
	04	E36A E36B
	06	G12A G16A G38A G38B
	16	Q01Z
	21B	X06A X06B X06C
41.31‡↔		AKBB
	01	B60A
	16	Q86A
41.32‡↔		AKBB
	01	B60A
	16	Q86A
41.33↔		BORP MBOR VAC VAC I VAC II VBOR
	04	E36A E36B
	06	G12A G16A G38A G38B
	16	Q01Z
41.41↔		BORP MBOR VAC VAC I VAC II VBOR
	04	E36A E36B
	06	G12A G16A G38A G38B
	16	Q01Z
	21B	X06A X06B X06C
41.42.00↔		BORP MBOR VAC VBOR
	04	E36A E36B
	05	F21A F21B F21C
	06	G12A G12B G16A G16B G38A G38B
	08	I28A I28B
	16	Q01Z
	21B	X06A X06B X06C
41.42.10↔		BORP MBOR VAC VBOR
	04	E36A E36B
	05	F21A F21B F21C
	06	G12A G12B G16A G16B G38A G38B
	08	I28A I28B
	16	Q01Z
	21B	X06A X06B X06C
41.42.20↔		BORP MBOR VAC VBOR
	04	E36A E36B
	05	F21A F21B F21C
	06	G12A G12B G16A G16B G38A G38B
	08	I28A I28B
	16	Q01Z
	21B	X06A X06B X06C
41.42.99↔		BORP MBOR VAC VBOR
	04	E36A E36B
	05	F21A F21B F21C
	06	G12A G12B G16A G16B G38A G38B
	08	I28A I28B
	16	Q01Z
	21B	X06A X06B X06C
41.43↔		BORP MBOR MVE VAC VAC I VAC II VBOR
	04	E36A E36B
	05	F21A F21B F21C
	06	G12A G12B G16A G16B G18A G38A G38B G38C
	08	I28A I28B
	16	Q01Z
	21B	X06A X06B X06C
41.5↔		BORP MBOR MVE VAC VAC I VAC II VBOR
	04	E36A E36B
	05	F21A F21B F21C
	06	G12A G12B G16A G16B G18A G38A G38B G38C
	08	I28A I28B
	11	L09A L09B
	13	N01D N11A
	16	Q01Z
	21B	X06A X06B X06C
41.93↔		BORP MBOR VAC VAC I VAC II VBOR
	04	E36A E36B
	06	G12A G16A G38A G38B
	16	Q01Z
	21B	X06A X06B X06C

PROC

CHOP	MDC	DRG
41.94↔		BORP KORP MBOR MKOR VAC VAC I VAC II VBOR VKOR
	04	E36A E36B
	06	G12A G12B G16A G38A G38B
	16	Q01Z
	21B	X06A X06B X06C
41.95.00↔		BORP MBOR VAC VAC I VAC II VBOR
	04	E36A E36B
	06	G12A G12B G16A G38A G38B
	16	Q01Z
	21B	X06A X06B X06C
41.95.10↔		BORP MBOR VAC VAC I VAC II VBOR
	04	E36A E36B
	06	G12A G12B G16A G38A G38B
	16	Q01Z
	21B	X06A X06B X06C
41.95.99↔		BORP MBOR VAC VAC I VAC II VBOR
	04	E36A E36B
	06	G12A G12B G16A G38A G38B
	16	Q01Z
	21B	X06A X06B X06C
41.99↔		BORP MBOR VAC VAC I VAC II VBOR
	04	E36A E36B
	06	G12A G16A G38A G38B
	16	Q01Z
	21B	X06A X06B X06C
42.09.11↔		BORP MBOR VAC VBOR
	04	E36A E36B
	06	G12A G16A G16B G18A G18B G19A G19B G38A G38B G38C
	07	H33Z
	11	L33Z
	21B	X06A X06B X06C
42.09.12↔		BORP MBOR VAC VBOR
	04	E36A E36B
	06	G12A G16A G16B G18A G18B G19A G19B G38A G38B G38C
	07	H33Z
	11	L33Z
	21B	X06A X06B X06C
42.10↔		BORP MBOR VAC VBOR
	04	E36A E36B
	06	G12A G16A G16B G18A G18B G19A G19B G38A G38B G38C
	07	H33Z
	11	L33Z
	21B	X06A X06B X06C
	22	Y02A Y02B Y02C
42.11↔		BORP MBOR MVE VAC VAC I VAC II VBOR
	04	E36A E36B
	06	G12A G16A G16B G18A G18B G19A G19B G38A G38B G38C
	07	H33Z
	11	L33Z
	21B	X06A X06B X06C
	22	Y02A Y02B Y02C
42.12↔		BORP MBOR VAC VAC I VAC II VBOR
	04	E36A E36B
	06	G12A G16A G16B G18A G18B G19A G19B G38A G38B G38C
	07	H33Z
	11	L33Z
	21B	X06A X06B X06C
	22	Y02A Y02B Y02C
42.19↔		BORP MBOR VAC VAC I VAC II VBOR
	04	E36A E36B
	06	G12A G16A G16B G18A G18B G19A G19B G38A G38B G38C
	07	H33Z
	11	L33Z
	21B	X06A X06B X06C
	22	Y02A Y02B Y02C
42.21↔		BORP MBOR VAC VAC I VAC II VBOR
	04	E36A E36B
	06	G04A G04B G12A G16A G38A G38B G38C
	21B	X06A X06B X06C
42.22‡↔	01	B60A
	04	E71B E75A E77A
	06	G46A G46B G46C G46D G72A G86C
42.23‡↔	01	B60A
	04	E71B E75A E77A
	06	G46A G46B G46C G46D G72A G86C
42.24‡↔		AKBB
	01	B60A
	04	E71B E75A E77A
	06	G46A G46B G46C G46D G72A G86C
	16	Q86A
42.25↔		BORP MBOR VAC VAC I VAC II VBOR
	04	E36A E36B
	06	G12A G16A G16B G18A G18B G19A G19B G38A G38B G38C
42.31↔		BORP MBOR VAC VAC I VAC II VBOR
	04	E36A E36B
	06	G12A G16A G16B G18A G18B G19A G19B G38A G38B G38C
	07	H33Z
	11	L33Z
42.32↔		BORP MBOR VAC VBOR
	04	E36A E36B
	06	G12A G16A G16B G18A G18B G19A G19B G38A G38B G38C
	07	H33Z
	11	L33Z
42.33.10‡↔	01	B60A
	04	E71B E75A E77A
	06	G46A G46B G46C G46D G72A G86C
	07	H41A H41B H41C H41D
42.33.11‡↔	01	B60A
	04	E71B E75A E77A
	06	G46A G46B G46C G46D G72A G86C
	07	H41A H41B H41C H41D
42.33.20‡↔	01	B60A
	04	E71B E75A E77A
	06	G46A G46B G46C G46D G72A G86C
	07	H41A H41B H41C H41D
42.33.21‡↔	01	B60A
	04	E71B E75A E77A
	06	G46A G46B G46C G46D G72A G86C
	07	H41A H41B H41C H41D
42.33.22‡↔	01	B60A
	04	E71B E75A E77A
	06	G46A G46B G46C G46D G72A G86C
	07	H41A H41B H41C H41D
42.33.23‡↔	01	B60A
	04	E71B E75A E77A
	06	G46A G46B G46C G46D G72A G86C
	07	H41A H41B H41C H41D
42.33.29‡↔	01	B60A
	04	E71B E75A E77A
	06	G46A G46B G46C G46D G72A G86C
	07	H41A H41B H41C H41D
42.33.30‡↔	01	B60A
	04	E71B E75A E77A
	06	G46A G46B G46C G46D G72A G86C
	07	H41A H41B H41C H41D
42.39↔		BORP MBOR VAC VBOR
	04	E36A E36B
	06	G12A G16A G16B G18A G18B G19A G19B G38A G38B G38C
	07	H33Z
	11	L33Z
42.40↔		BORP MBOR VAC VAC I VAC II VBOR
	04	E36A E36B
	06	G03B G12A G16A G16B G18A G18B G19A G19B G33Z

CHOP	MDC	DRG
		G38A G38B G38C
	07	H33Z
	11	L33Z
	21B	X06A X06B X06C X07A X07B
	22	Y02A Y02B Y02C
42.41.00↔		BORP MBOR VAC VAC I VAC II VBOR
	04	E36A E36B
	06	G12A G16A G16B G18A G18B G19A G19B G33Z G38A G38B G38C
	07	H33Z
	11	L33Z
	21B	X06A X06B X06C X07A X07B
	22	Y02A Y02B Y02C
42.41.10↔		BORP MBOR MVE VAC VAC I VAC II VBOR
	04	E36A E36B
	06	G12A G16A G16B G18A G18B G19A G19B G33Z G38A G38B G38C
	07	H33Z
	11	L33Z
	21B	X06A X06B X06C X07A X07B
	22	Y02A Y02B Y02C
42.41.20↔		BORP MBOR MVE VAC VAC I VAC II VBOR
	04	E36A E36B
	06	G03A G03B G12A G16A G16B G18A G18B G19A G19B G33Z G38A G38B G38C
	07	H33Z
	11	L33Z
	21B	X06A X06B X06C X07A X07B
	22	Y02A Y02B Y02C
42.41.99↔		BORP MBOR MVE VAC VAC I VAC II VBOR
	04	E36A E36B
	06	G12A G16A G16B G18A G18B G19A G19B G33Z G38A G38B G38C
	07	H33Z
	11	L33Z
	21B	X06A X06B X06C X07A X07B
	22	Y02A Y02B Y02C
42.42.00↔		BORP KORP MBOR MKOR VAC VAC I VAC II VBOR VKOR
	03	D24A D24B D24C
	04	E36A E36B
	06	G03A G03B G12A G16A G16B G18A G18B G19A G19B G33Z G38A G38B G38C
	07	H33Z
	09	J02A J02B J08Z
	11	L33Z
	21B	X06A X06B X06C
	22	Y02A Y02B Y02C
42.42.10↔		BORP KORP MBOR MKOR MVE VAC VAC I VAC II VBOR VKOR
	03	D24A D24B D24C
	04	E36A E36B
	06	G03A G03B G12A G16A G16B G18A G18B G19A G19B G33Z G38A G38B G38C
	07	H33Z
	09	J02A J02B J08Z
	11	L33Z
	21B	X06A X06B X06C X07A X07B
	22	Y02A Y02B Y02C
42.42.20↔		BORP KORP MBOR MKOR MVE VAC VAC I VAC II VBOR VKOR
	03	D24A D24B D24C
	04	E36A E36B
	06	G03A G03B G12A G16A G16B G18A G18B G19A G19B G33Z G38A G38B G38C
	07	H33Z
	09	J02A J02B J08Z
	11	L33Z
	21B	X06A X06B X06C X07A X07B
	22	Y02A Y02B Y02C
42.42.21↔		BORP KORP MBOR MKOR MVE VAC VAC I VAC II VBOR VKOR
	03	D24A D24B D24C
	04	E36A E36B
	06	G03A G03B G12A G16A G16B G18A G18B G19A G19B G33Z G38A G38B G38C
	07	H33Z
	09	J02A J02B J08Z
	11	L33Z
	21B	X06A X06B X06C X07A X07B
	22	Y02A Y02B Y02C
42.42.29↔		BORP KORP MBOR MKOR MVE VAC VAC I VAC II VBOR VKOR
	03	D24A D24B D24C
	04	E36A E36B
	06	G03A G03B G12A G16A G16B G18A G18B G19A G19B G33Z G38A G38B G38C
	07	H33Z
	09	J02A J02B J08Z
	11	L33Z
	21B	X06A X06B X06C X07A X07B
	22	Y02A Y02B Y02C
42.42.99↔		BORP KORP MBOR MKOR MVE VAC VAC I VAC II VBOR VKOR
	03	D24A D24B D24C
	04	E36A E36B
	06	G03A G03B G12A G16A G16B G18A G18B G19A G19B G33Z G38A G38B G38C
	07	H33Z
	09	J02A J02B J08Z
	11	L33Z
	21B	X06A X06B X06C X07A X07B
	22	Y02A Y02B Y02C
42.51.00↔		BORP MBOR VAC VAC I VAC II VBOR
	04	E36A E36B
	06	G02A G02B G03A G03B G12A G16A G33Z G38A G38B G38C
	07	H33Z
	11	L33Z
	21B	X06A X06B X06C X07A X07B
	22	Y02A Y02B Y02C
42.51.10↔		BORP KORP MBOR MKOR MVE VAC VAC I VAC II VBOR VKOR
	04	E36A E36B
	06	G02A G02B G03A G03B G12A G16A G33Z G38A G38B G38C
	07	H33Z
	11	L33Z
	21B	X06A X06B X06C X07A X07B
	22	Y02A Y02B Y02C
42.51.99↔		BORP MBOR MVE VAC VAC I VAC II VBOR
	04	E36A E36B
	06	G02A G02B G03A G03B G12A G16A G33Z G38A G38B G38C
	07	H33Z
	11	L33Z
	21B	X06A X06B X06C X07A X07B
	22	Y02A Y02B Y02C
42.52↔		BORP MBOR MVE VAC VAC I VAC II VBOR
	04	E36A E36B
	06	G03A G03B G12A G16A G33Z G38A G38B G38C
	07	H33Z
	11	L33Z
	21B	X06A X06B X06C X07A X07B
	22	Y02A Y02B Y02C

PROC

PROC

CHOP	MDC	DRG
42.53↔		BORP MBOR MVE VAC VAC I VAC II VBOR
	04	E36A E36B
	06	G03A G03B G12A G16A G33Z G38A G38B G38C
	07	H33Z
	11	L33Z
	21B	X06A X06B X06C X07A X07B
	22	Y02A Y02B Y02C
42.54↔		BORP MBOR MVE VAC VAC I VAC II VBOR
	04	E36A E36B
	06	G03A G03B G12A G16A G33Z G38A G38B G38C
	07	H33Z
	11	L33Z
	21B	X06A X06B X06C X07A X07B
	22	Y02A Y02B Y02C
42.55↔		BORP MBOR MVE VAC VAC I VAC II VBOR
	04	E36A E36B
	06	G03A G03B G12A G16A G33Z G38A G38B G38C
	07	H33Z
	11	L33Z
	21B	X06A X06B X06C X07A X07B
	22	Y02A Y02B Y02C
42.56↔		BORP MBOR MVE VAC VAC I VAC II VBOR
	04	E36A E36B
	06	G03A G03B G12A G16A G33Z G38A G38B G38C
	07	H33Z
	11	L33Z
	21B	X06A X06B X06C X07A X07B
	22	Y02A Y02B Y02C
42.58↔		BORP MBOR MVE VAC VAC I VAC II VBOR
	04	E36A E36B
	06	G03A G03B G12A G16A G33Z G38A G38B G38C
	07	H33Z
	11	L33Z
	21B	X06A X06B X06C X07A X07B
	22	Y02A Y02B Y02C
42.59↔		BORP MBOR MVE VAC VAC I VAC II VBOR
	04	E36A E36B
	06	G03A G03B G12A G16A G33Z G38A G38B G38C
	07	H33Z
	11	L33Z
	21B	X06A X06B X06C X07A X07B
	22	Y02A Y02B Y02C
42.61↔		BORP MBOR MVE VAC VAC I VAC II VBOR
	04	E36A E36B
	06	G03A G03B G12A G16A G33Z G38A G38B G38C
	07	H33Z
	11	L33Z
	21B	X06A X06B X06C X07A X07B
	22	Y02A Y02B Y02C
42.62↔		BORP MBOR MVE VAC VAC I VAC II VBOR
	04	E36A E36B
	06	G03A G03B G12A G16A G33Z G38A G38B G38C
	07	H33Z
	11	L33Z
	21B	X06A X06B X06C X07A X07B
	22	Y02A Y02B Y02C
42.63↔		BORP MBOR MVE VAC VAC I VAC II VBOR
	04	E36A E36B
	06	G03A G03B G12A G16A G33Z G38A G38B G38C
	07	H33Z
	11	L33Z
	21B	X06A X06B X06C X07A X07B
	22	Y02A Y02B Y02C
42.64↔		BORP MBOR MVE VAC VAC I VAC II VBOR
	04	E36A E36B
	06	G03A G03B G12A G16A G33Z G38A G38B G38C
	07	H33Z
	11	L33Z
	21B	X06A X06B X06C X07A X07B
	22	Y02A Y02B Y02C
42.65↔		BORP MBOR MVE VAC VAC I VAC II VBOR
	04	E36A E36B
	06	G03A G03B G12A G16A G33Z G38A G38B G38C
	07	H33Z
	11	L33Z
	21B	X06A X06B X06C X07A X07B
	22	Y02A Y02B Y02C
42.66↔		BORP MBOR MVE VAC VAC I VAC II VBOR
	04	E36A E36B
	06	G03A G03B G12A G16A G33Z G38A G38B G38C
	07	H33Z
	11	L33Z
	21B	X06A X06B X06C X07A X07B
	22	Y02A Y02B Y02C
42.68↔		BORP MBOR MVE VAC VAC I VAC II VBOR
	04	E36A E36B
	06	G03A G03B G12A G16A G33Z G38A G38B G38C
	07	H33Z
	11	L33Z
	21B	X06A X06B X06C X07A X07B
	22	Y02A Y02B Y02C
42.69↔		BORP MBOR MVE VAC VAC I VAC II VBOR
	04	E36A E36B
	06	G03A G03B G12A G16A G33Z G38A G38B G38C
	07	H33Z
	11	L33Z
	21B	X06A X06B X06C X07A X07B
	22	Y02A Y02B Y02C
42.7X.10‡↔	01	B60A
	04	E71B E75A E77A
	06	G46A G46B G46C G46D G72A G86C
	07	H41A H41B H41C H41D
42.7X.11↔		BORP MBOR VAC VAC I VAC II VBOR
	04	E36A E36B
	06	G12A G12B G16A G38A G38B
	07	H33Z
	11	L33Z
	21B	X06A X06B X06C
42.7X.12↔		BORP MBOR VAC VAC I VAC II VBOR
	04	E36A E36B
	06	G12A G12B G16A G38A G38B
	07	H33Z
	11	L33Z
	21B	X06A X06B X06C
42.7X.20‡↔	01	B60A
	04	E71B E75A E77A
	06	G46A G46B G46C G46D G72A G86C
	07	H41A H41B H41C H41D
42.7X.21↔		BORP MBOR VAC VAC I VAC II VBOR
	04	E36A E36B
	06	G12A G12B G16A G38A G38B
	07	H33Z
	11	L33Z
	21B	X06A X06B X06C
42.7X.22↔		BORP MBOR VAC VAC I VAC II VBOR
	04	E36A E36B
	06	G12A G12B G16A G38A G38B
	07	H33Z

CHOP	MDC	DRG
	11	L33Z
	21B	X06A X06B X06C
42.7X.30‡↔	01	B60A
	04	E71B E75A E77A
	06	G46A G46B G46C G46D G72A G86C
	07	H41A H41B H41C H41D
42.7X.31↔		BORP MBOR VAC VAC I VAC II VBOR
	04	E36A E36B
	06	G12A G12B G16A G38A G38B
	07	H33Z
	11	L33Z
	21B	X06A X06B X06C
42.7X.32↔		BORP MBOR VAC VAC I VAC II VBOR
	04	E36A E36B
	06	G12A G12B G16A G38A G38B
	07	H33Z
	11	L33Z
	21B	X06A X06B X06C
42.81.00‡↔	01	B60A
	04	E71B E75A E77A
	06	G46A G46B G46C G46D G72A G86C
	07	H41A H41B H41C H41D
42.81.10‡↔	01	B60A
	04	E71B E75A E77A
	06	G46A G46B G46C G46D G72A G86C
	07	H41A H41B H41C H41D
42.81.11‡↔	01	B60A
	04	E71B E75A E77A
	06	G46A G46B G46C G46D G72A G86C
	07	H41A H41B H41C H41D
42.81.12‡↔	01	B60A
	04	E71B E75A E77A
	06	G46A G46B G46C G46D G72A G86C
	07	H41A H41B H41C H41D
42.81.20↔		BORP MBOR VAC VAC I VAC II VBOR
	04	E36A E36B
	06	G12A G12B G16A G38A G38B
	07	H06Z H33Z
	11	L33Z
	21B	X06A X06B X06C
	22	Y02A Y02B Y02C
42.81.21↔		BORP MBOR VAC VAC I VAC II VBOR
	04	E36A E36B
	06	G12A G12B G16A G38A G38B
	07	H06Z H33Z
	11	L33Z
	21B	X06A X06B X06C
	22	Y02A Y02B Y02C
42.81.22↔		BORP MBOR VAC VAC I VAC II VBOR
	04	E36A E36B
	06	G12A G12B G16A G38A G38B
	07	H06Z H33Z
	11	L33Z
	21B	X06A X06B X06C
	22	Y02A Y02B Y02C
42.81.30↔		BORP MBOR VAC VAC I VAC II VBOR
	04	E36A E36B
	06	G12A G12B G16A G38A G38B
	07	H06Z H33Z
	11	L33Z
	21B	X06A X06B X06C
	22	Y02A Y02B Y02C
42.81.31↔		BORP MBOR VAC VAC I VAC II VBOR
	04	E36A E36B
	06	G12A G12B G16A G38A G38B
	07	H06Z H33Z
	11	L33Z
	21B	X06A X06B X06C
	22	Y02A Y02B Y02C
42.81.32↔		BORP MBOR VAC VAC I VAC II VBOR
	04	E36A E36B
	06	G12A G12B G16A G38A G38B
	07	H06Z H33Z
	11	L33Z
	21B	X06A X06B X06C
	22	Y02A Y02B Y02C
42.81.40‡↔	01	B60A
	04	E71B E75A E77A
	06	G46A G46B G46C G46D G72A G86C
	07	H41A H41B H41C H41D
42.81.41‡↔	01	B60A
	04	E71B E75A E77A
	06	G46A G46B G46C G46D G72A G86C
	07	H41A H41B H41C H41D
42.81.42‡↔	01	B60A
	04	E71B E75A E77A
	06	G46A G46B G46C G46D G72A G86C
42.81.50↔		BORP MBOR VAC VAC I VAC II VBOR
	04	E36A E36B
	06	G12A G12B G16A G38A G38B
	07	H06Z H33Z
	11	L33Z
	21B	X06A X06B X06C
	22	Y02A Y02B Y02C
42.81.51↔		BORP MBOR VAC VAC I VAC II VBOR
	04	E36A E36B
	06	G12A G12B G16A G38A G38B
	07	H06Z H33Z
	11	L33Z
	21B	X06A X06B X06C
	22	Y02A Y02B Y02C
42.81.52↔		BORP MBOR VAC VAC I VAC II VBOR
	04	E36A E36B
	06	G12A G12B G16A G38A G38B
	07	H06Z H33Z
	11	L33Z
	21B	X06A X06B X06C
	22	Y02A Y02B Y02C
42.81.60↔		BORP MBOR VAC VAC I VAC II VBOR
	04	E36A E36B
	06	G12A G12B G16A G38A G38B
	07	H06Z H33Z
	11	L33Z
	21B	X06A X06B X06C
	22	Y02A Y02B Y02C
42.81.61↔		BORP MBOR VAC VAC I VAC II VBOR
	04	E36A E36B
	06	G12A G12B G16A G38A G38B
	07	H06Z H33Z
	11	L33Z
	21B	X06A X06B X06C
	22	Y02A Y02B Y02C
42.81.62↔		BORP MBOR VAC VAC I VAC II VBOR
	04	E36A E36B
	06	G12A G12B G16A G38A G38B
	07	H06Z H33Z
	11	L33Z
	21B	X06A X06B X06C
	22	Y02A Y02B Y02C
42.81.99‡↔	01	B60A
	04	E71B E75A E77A
	06	G46A G46B G46C G46D G72A G86C
	07	H41A H41B H41C H41D
42.82↔		BORP MBOR MVE VAC VAC I VAC II VBOR
	04	E36A E36B
	06	G12A G16A G16B G18A G18B G19A G19B G38A G38B G38C
	07	H33Z
	11	L33Z
	21B	X06A X06B X06C
	22	Y02A Y02B Y02C
42.83↔		BORP MBOR VAC VAC I VAC II VBOR
	04	E01A E01B E06A E06B E06C E36A E36B
	06	G12A G16A G16B G18A G18B G19A G19B G38A G38B G38C
	07	H33Z
	11	L33Z
	21B	X06A X06B X06C
	22	Y02A Y02B Y02C
42.85↔		BORP MBOR VAC VAC I VAC II VBOR
	04	E36A E36B
	06	G03A G03B G12A G16A G33Z G38A G38B G38C
	07	H33Z

PROC

PROC

CHOP	MDC	DRG
	11	L33Z
	21B	X06A X06B X06C X07A X07B
	22	Y02A Y02B Y02C
42.87↔		BORP MBOR VAC VAC I VAC II VBOR
	04	E36A E36B
	06	G03A G03B G12A G16A G33Z G38A G38B G38C
	07	H33Z
	11	L33Z
	21B	X06A X06B X06C X07A X07B
	22	Y02A Y02B Y02C
42.88.00↔		BORP MBOR VAC VBOR
	04	E36A E36B
	06	G12A G16A G16B G18A G18B G19A G19B G38A G38B G38C
	07	H06Z H33Z
	11	L33Z
42.88.10‡↔	01	B60A
	04	E71B E75A E77A
	06	G46A G46B G46C G46D G72A G86C
	07	H41A H41B H41C H41D
42.88.11↔		BORP MBOR VAC VAC I VAC II VBOR
	04	E36A E36B
	06	G12A G16A G16B G18A G18B G19A G19B G38A G38B G38C
	07	H06Z H33Z
	11	L33Z
42.88.12↔		BORP MBOR VAC VAC I VAC II VBOR
	04	E36A E36B
	06	G12A G16A G16B G18A G18B G19A G19B G38A G38B G38C
	07	H06Z H33Z
	11	L33Z
42.88.99↔		BORP MBOR VAC VBOR
	04	E36A E36B
	06	G12A G16A G16B G18A G18B G19A G19B G38A G38B G38C
	07	H06Z H33Z
	11	L33Z
42.89↔	06	G16A G16B G18A G18B G19A G19B G38A G38B G38C
	07	H33Z
	11	L33Z
	21B	X06A X06B X06C
	22	Y02A Y02B Y02C
42.91↔		BORP MBOR VAC VAC I VAC II VBOR
	04	E36A E36B
	06	G12A G12B G16A G38A G38B
	07	H06Z H33Z

CHOP	MDC	DRG
	11	L33Z
42.92‡↔	01	B60A
	04	E71B E75A E77A
	06	G46A G46B G46C G46D G72A G86C
42.99.10↔		BORP MBOR VAC VAC I VAC II VBOR
	04	E36A E36B
	06	G12A G16A G16B G18A G18B G19A G19B G38A G38B G38C
	07	H06Z H33Z
	11	L33Z
42.99.20‡↔	01	B60A
	04	E71B E75A E77A
	06	G46A G46B G46C G46D G72A G86C
	07	H41A H41B H41C H41D
42.99.35↔		BORP MBOR VAC VAC I VAC II VBOR
	04	E36A E36B
	06	G12A G16A G16B G18A G18B G19A G19B G38A G38B G38C
	07	H06Z H33Z
	11	L33Z
42.99.36↔		BORP MBOR VAC VAC I VAC II VBOR
	04	E36A E36B
	06	G12A G16A G16B G18A G18B G19A G19B G38A G38B G38C
	07	H06Z H33Z
	11	L33Z
42.99.37↔		BORP MBOR VAC VAC I VAC II VBOR
	04	E36A E36B
	06	G12A G16A G16B G18A G18B G19A G19B G38A G38B G38C
	07	H06Z H33Z
	11	L33Z
42.99.38↔		BORP MBOR VAC VAC I VAC II VBOR
	04	E36A E36B
	06	G12A G16A G16B G18A G18B G19A G19B G38A G38B G38C
	07	H06Z H33Z
	11	L33Z
42.99.39↔	06	G16A G16B G18A G18B G19A G19B G38A G38B G38C
42.99.3A↔		BORP MBOR VAC VAC I VAC II VBOR
	04	E36A E36B
	06	G12A G16A G16B G18A G18B G19A G19B G38A G38B G38C
	07	H06Z H33Z
	11	L33Z
42.99.3B↔		BORP MBOR VAC VAC I VAC II VBOR

CHOP	MDC	DRG
	04	E36A E36B
	06	G12A G16A G16B G18A G18B G19A G19B G38A G38B G38C
	07	H06Z H33Z
	11	L33Z
42.99.3C↔		BORP MBOR VAC VAC I VAC II VBOR
	04	E36A E36B
	06	G12A G16A G16B G18A G18B G19A G19B G38A G38B G38C
	07	H06Z H33Z
	11	L33Z
42.99.3D↔		BORP MBOR VAC VAC I VAC II VBOR
	04	E36A E36B
	06	G12A G16A G16B G18A G18B G19A G19B G38A G38B G38C
	07	H06Z H33Z
	11	L33Z
42.99.3E↔		BORP MBOR VAC VAC I VAC II VBOR
	04	E36A E36B
	06	G12A G16A G16B G18A G18B G19A G19B G38A G38B G38C
	07	H06Z H33Z
	11	L33Z
42.99.3F↔		BORP MBOR VAC VAC I VAC II VBOR
	04	E36A E36B
	06	G12A G16A G16B G18A G18B G19A G19B G38A G38B G38C
	07	H06Z H33Z
	11	L33Z
42.99.41‡↔	01	B60A
	04	E71B E75A E77A
	06	G46A G46B G46C G46D G72A G86C
	07	H41A H41B H41C H41D
42.99.42↔		BORP MBOR VAC VAC I VAC II VBOR
	04	E36A E36B
	06	G12A G16A G16B G18A G18B G19A G19B G38A G38B G38C
	07	H06Z H33Z
	11	L33Z
43.0↔		BORP MBOR VAC VBOR
	04	E36A E36B
	06	G12A G16A G16B G18A G18B G19A G19B G38A G38B G38C
	07	H06Z H33Z
	11	L33Z
	21B	X06A X06B X06C
	22	Y02A Y02B Y02C
43.11‡↔	01	B60A
	04	E71B E75A E77A
	06	G46A G46B G46C

CHOP	MDC	DRG
		G46D G72A G86C
43.3↔		BORP MBOR VAC VAC I VAC II VBOR
	04	E36A E36B
	06	G11A G11B G12A G16A G38A G38B
43.41.10‡↔	01	B60A
	04	E71B E75A E77A
	06	G46A G46B G46C G46D G72A G86C
43.41.11‡↔	01	B60A
	04	E71B E75A E77A
	06	G46A G46B G46C G46D G72A G86C
43.41.20‡↔	01	B60A
	04	E71B E75A E77A
	06	G46A G46B G46C G46D G72A G86C
43.41.29‡↔	01	B60A
	04	E71B E75A E77A
	06	G46A G46B G46C G46D G72A G86C
43.42.11↔	06	G12A G12B
43.42.21↔	06	G12A G12B
43.5↔		BORP MBOR MVE VAC VAC I VAC II VBOR
	04	E36A E36B
	06	G03B G12A G16A G16B G18A G18B G19A G19B G33Z G38A G38B G38C
	07	H33Z
	09	J01A J01B
	11	L33Z
	21B	X06A X06B X06C X07A X07B
	22	Y02A Y02B Y02C
43.6X.00↔		BORP MBOR VAC VAC I VAC II VBOR
	04	E36A E36B
	06	G03A G03B G03C G12A G16A G16B G18A G18B G19A G19B G33Z G38A G38B G38C
	07	H33Z
	09	J01A J01B
	11	L33Z
	21B	X06A X06B X06C X07A X07B
	22	Y02A Y02B Y02C
43.6X.10↔		BORP MBOR MVE VAC VAC I VAC II VBOR
	04	E36A E36B
	06	G03A G03B G03C G12A G16A G16B G18A G18B G19A G19B G33Z G38A G38B G38C
	07	H33Z
	09	J01A J01B
	11	L33Z
	21B	X06A X06B X06C X07A X07B
	22	Y02A Y02B Y02C
43.6X.20↔		BORP MBOR MVE VAC VAC I VAC II VBOR
	04	E36A E36B
	06	G03A G03B G03C G12A G16A G16B G18A G18B G19A G19B G33Z G38A G38B G38C
	07	H33Z
	09	J01A J01B
	11	L33Z
	21B	X06A X06B X06C X07A X07B
	22	Y02A Y02B Y02C
43.6X.99↔		BORP MBOR MVE VAC VAC I VAC II VBOR
	04	E36A E36B
	06	G03A G03B G03C G12A G16A G16B G18A G18B G19A G19B G33Z G38A G38B G38C
	07	H33Z
	09	J01A J01B
	11	L33Z
	21B	X06A X06B X06C X07A X07B
	22	Y02A Y02B Y02C
43.70↔		BORP MBOR VAC VAC I VAC II VBOR
	04	E36A E36B
	06	G12A G16A G16B G18A G18B G19A G19B G33Z G38A G38B G38C
	07	H33Z
	09	J01A J01B
	11	L33Z
	21B	X06A X06B X06C X07A X07B
	22	Y02A Y02B Y02C
43.71.11↔		BORP MBOR MVE VAC VAC I VAC II VBOR
	04	E36A E36B
	06	G12A G16A G16B G18A G18B G19A G19B G33Z G38A G38B G38C
	07	H33Z
	09	J01A J01B
	11	L33Z
	21B	X06A X06B X06C X07A X07B
	22	Y02A Y02B Y02C
43.71.21↔		BORP MBOR MVE VAC VAC I VAC II VBOR
	04	E36A E36B
	06	G12A G16A G16B G18A G18B G19A G19B G33Z G38A G38B G38C
	07	H33Z
	09	J01A J01B
	11	L33Z
	21B	X06A X06B X06C X07A X07B
	22	Y02A Y02B Y02C
43.72.11↔		BORP MBOR MVE VAC VAC I VAC II VBOR
	04	E36A E36B
	06	G12A G16A G16B G18A G18B G19A G19B G33Z G38A G38B G38C
	07	H33Z
	09	J01A J01B
	11	L33Z
	21B	X06A X06B X06C X07A X07B
	22	Y02A Y02B Y02C
43.72.21↔		BORP MBOR MVE VAC VAC I VAC II VBOR
	04	E36A E36B
	06	G12A G16A G16B G18A G18B G19A G19B G33Z G38A G38B G38C
	07	H33Z
	09	J01A J01B
	11	L33Z
	21B	X06A X06B X06C X07A X07B
	22	Y02A Y02B Y02C
43.79↔		BORP MBOR MVE VAC VAC I VAC II VBOR
	04	E36A E36B
	06	G12A G16A G16B G18A G18B G19A G19B G33Z G38A G38B G38C
	07	H33Z
	09	J01A J01B
	11	L33Z
	21B	X06A X06B X06C X07A X07B
	22	Y02A Y02B Y02C
43.81↔		BORP MBOR MVE VAC VAC I VAC II VBOR
	04	E36A E36B
	06	G03A G03B G03C G12A G16A G33Z G38A G38B G38C
	07	H33Z
	09	J01A J01B
	11	L33Z
	21B	X06A X06B X06C X07A X07B
	22	Y02A Y02B Y02C
43.89.00↔		BORP MBOR VAC VAC I VAC II VBOR
	04	E36A E36B
	06	G12A G16A G16B G18A G18B G19A G19B G33Z G38A G38B G38C
	07	H33Z
	09	J01A J01B
	11	L33Z
	21B	X06A X06B X06C X07A X07B
	22	Y02A Y02B Y02C
43.89.09↔		BORP MBOR MVE VAC VAC I VAC II VBOR
	04	E36A E36B

PROC

PROC

CHOP	MDC	DRG
	06	G12A G16A G16B G18A G18B G19A G19B G33Z G38A G38B G38C
	07	H06Z H33Z
	09	J01A J01B
	11	L33Z
	21B	X06A X06B X06C X07A X07B
	22	Y02A Y02B Y02C
43.89.10↔		BORP MBOR MVE VAC VAC I VAC II VBOR
	04	E36A E36B
	06	G12A G16A G16B G18A G18B G19A G19B G33Z G38A G38B G38C
	07	H33Z
	09	J01A J01B
	11	L33Z
	21B	X06A X06B X06C X07A X07B
	22	Y02A Y02B Y02C
43.89.20↔		BORP MBOR MVE VAC VAC I VAC II VBOR
	04	E36A E36B
	06	G03A G03B G03C G12A G16A G16B G18A G18B G19A G19B G33Z G38A G38B G38C
	07	H33Z
	09	J01A J01B
	11	L33Z
	21B	X06A X06B X06C X07A X07B
	22	Y02A Y02B Y02C
43.89.21↔		BORP MBOR MVE VAC VAC I VAC II VBOR
	04	E36A E36B
	06	G03A G03B G03C G12A G16A G16B G18A G18B G19A G19B G33Z G38A G38B G38C
	07	H33Z
	09	J01A J01B
	11	L33Z
	21B	X06A X06B X06C X07A X07B
	22	Y02A Y02B Y02C
43.89.30↔		BORP MBOR MVE VAC VAC I VAC II VBOR
	04	E36A E36B
	06	G03A G03B G03C G12A G16A G16B G18A G18B G19A G19B G33Z G38A G38B G38C
	07	H33Z
	09	J01A J01B
	11	L33Z
	21B	X06A X06B X06C X07A X07B
	22	Y02A Y02B Y02C
43.89.31↔		BORP MBOR MVE VAC VAC I VAC II VBOR
	04	E36A E36B
	06	G03A G03B G03C G12A G16A G16B G18A G18B G19A G19B G33Z G38A G38B G38C
	07	H33Z
	09	J01A J01B
	11	L33Z
	21B	X06A X06B X06C X07A X07B
	22	Y02A Y02B Y02C
43.89.40↔		BORP KORP MBOR MKOR MVE VAC VAC I VAC II VBOR VKOR
	04	E36A E36B
	06	G12A G16A G16B G18A G18B G19A G19B G33Z G38A G38B G38C
	07	H33Z
	09	J01A J01B
	11	L33Z
	21B	X06A X06B X06C X07A X07B
	22	Y02A Y02B Y02C
43.89.41↔		BORP KORP MBOR MKOR MVE VAC VAC I VAC II VBOR VKOR
	04	E36A E36B
	06	G12A G16A G16B G18A G18B G19A G19B G33Z G38A G38B G38C
	07	H33Z
	09	J01A J01B
	11	L33Z
	21B	X06A X06B X06C X07A X07B
	22	Y02A Y02B Y02C
43.89.42↔		BORP KORP MBOR MKOR MVE VAC VAC I VAC II VBOR VKOR
	04	E36A E36B
	06	G12A G16A G16B G18A G18B G19A G19B G33Z G38A G38B G38C
	07	H33Z
	09	J01A J01B
	11	L33Z
	21B	X06A X06B X06C X07A X07B
	22	Y02A Y02B Y02C
43.89.43↔		BORP KORP MBOR MKOR MVE VAC VAC I VAC II VBOR VKOR
	04	E36A E36B
	06	G12A G16A G16B G18A G18B G19A G19B G33Z G38A G38B G38C
	07	H33Z
	09	J01A J01B
	11	L33Z
	21B	X06A X06B X06C X07A X07B
	22	Y02A Y02B Y02C
43.89.44↔		BORP KORP MBOR MKOR MVE VAC VAC I VAC II VBOR VKOR
	04	E36A E36B
	06	G12A G16A G16B G18A G18B G19A G19B G33Z G38A G38B G38C
	07	H33Z
	09	J01A J01B
	11	L33Z
	21B	X06A X06B X06C X07A X07B
	22	Y02A Y02B Y02C
43.89.45↔		BORP KORP MBOR MKOR MVE VAC VAC I VAC II VBOR VKOR
	04	E36A E36B
	06	G12A G16A G16B G18A G18B G19A G19B G33Z G38A G38B G38C
	07	H33Z
	09	J01A J01B
	11	L33Z
	21B	X06A X06B X06C X07A X07B
	22	Y02A Y02B Y02C
43.89.50↔		BORP KORP MBOR MKOR MVE VAC VAC I VAC II VBOR VKOR
	04	E36A E36B
	06	G12A G16A G16B G18A G18B G19A G19B G33Z G38A G38B G38C
	07	H33Z
	09	J01A J01B
	11	L33Z
	21B	X06A X06B X06C X07A X07B
	22	Y02A Y02B Y02C
43.89.51↔		BORP KORP MBOR MKOR MVE VAC VAC I VAC II VBOR VKOR
	04	E36A E36B
	06	G12A G16A G16B G18A G18B G19A G19B G33Z G38A G38B G38C
	07	H33Z
	09	J01A J01B
	11	L33Z
	21B	X06A X06B X06C X07A X07B
	22	Y02A Y02B Y02C
43.89.61↔		BORP MBOR MVE VAC VAC I VAC II VBOR
	04	E36A E36B
	06	G12A G16A G16B G18A G18B G19A

CHOP	MDC	DRG
		G19B G33Z G38A
		G38B G38C
	07	H06Z H33Z
	09	J01A J01B
	11	L33Z
	21B	X06A X06B X06C
		X07A X07B
	22	Y02A Y02B Y02C
43.91↔		BORP MBOR MVE
		VAC VAC I VAC II
		VBOR
	04	E36A E36B
	06	G03A G03B G03C
		G12A G16A G33Z
		G38A G38B G38C
	07	H33Z
	09	J01A J01B
	11	L33Z
	21B	X06A X06B X06C
		X07A X07B
	22	Y02A Y02B Y02C
43.92↔		BORP MBOR MVE
		VAC VAC I VAC II
		VBOR
	04	E36A E36B
	06	G03A G03B G12A
		G16A G33Z G38A
		G38B G38C
	07	H33Z
	11	L33Z
	21B	X06A X06B X06C
		X07A X07B
	22	Y02A Y02B Y02C
43.99.00↔		BORP MBOR MVE
		VAC VAC I VAC II
		VBOR
	04	E36A E36B
	06	G03A G03B G03C
		G12A G16A G33Z
		G38A G38B G38C
	07	H33Z
	09	J01A J01B
	11	L33Z
	21B	X06A X06B X06C
		X07A X07B
	22	Y02A Y02B Y02C
43.99.10↔		BORP MBOR MVE
		VAC VAC I VAC II
		VBOR
	04	E36A E36B
	06	G03A G03B G03C
		G12A G16A G33Z
		G38A G38B G38C
	07	H33Z
	09	J01A J01B
	11	L33Z
	21B	X06A X06B X06C
		X07A X07B
	22	Y02A Y02B Y02C
43.99.11↔		BORP MBOR MVE
		VAC VAC I VAC II
		VBOR
	04	E36A E36B
	06	G03A G03B G03C
		G12A G16A G33Z
		G38A G38B G38C
	07	H33Z
	09	J01A J01B
	11	L33Z
	21B	X06A X06B X06C
		X07A X07B
	22	Y02A Y02B Y02C
43.99.99↔		BORP MBOR MVE
		VAC VAC I VAC II
		VBOR
	04	E36A E36B
	06	G03A G03B G03C
		G12A G16A G33Z
		G38A G38B G38C
	07	H33Z
	09	J01A J01B
	11	L33Z
	21B	X06A X06B X06C
		X07A X07B
	22	Y02A Y02B Y02C
44.00↔		BORP MBOR VAC
		VAC I VAC II VBOR
	04	E36A E36B
	06	G12A G16A G16B
		G18A G18B G19A
		G19B G38A G38B
		G38C
	07	H33Z
44.01↔		BORP MBOR VAC
		VAC I VAC II VBOR
	01	B17A B17B
	04	E36A E36B
	06	G12A G16A G16B
		G18A G18B G19A
		G19B G38A G38B
		G38C
	07	H33Z
44.02↔		BORP MBOR VAC
		VAC I VAC II VBOR
	04	E36A E36B
	06	G12A G16A G16B
		G18A G18B G19A
		G19B G38A G38B
		G38C
	07	H33Z
44.03↔		BORP MBOR VAC
		VAC I VAC II VBOR
	04	E36A E36B
	06	G12A G16A G16B
		G18A G18B G19A
		G19B G38A G38B
		G38C
	07	H33Z
44.11↔		BORP MBOR VAC
		VAC I VAC II VBOR
	04	E36A E36B
	06	G12A G12B G16A
		G38A G38B
	07	H12A H12B
	21B	X06A X06B X06C
	22	Y02A Y02B Y02C
44.13‡↔	01	B60A
	04	E71B E75A E77A
	06	G46A G46B G46C
		G46D G72A G86C
44.14‡↔		AKBB
	01	B60A
	04	E71B E75A E77A
	06	G46A G46B G46C
		G46D G72A G86C
	16	Q86A
44.15↔		BORP MBOR VAC
		VAC I VAC II VBOR
	04	E36A E36B
	06	G12A G16A G16B
		G18A G18B G19A
		G19B G38A G38B
		G38C
44.21↔		BORP MBOR VAC
		VAC I VAC II VBOR
	04	E36A E36B
	06	G12A G16A G16B
		G18A G18B G19A
		G19B G38A G38B
		G38C
	07	H33Z
	11	L33Z
44.22‡↔	01	B60A
	04	E71B E75A E77A
	06	G46A G46B G46C
		G46D G72A G86C
44.29↔		BORP MBOR VAC
		VAC I VAC II VBOR
	04	E36A E36B
	06	G12A G16A G16B
		G18A G18B G19A
		G19B G38A G38B
		G38C
	07	H33Z
	11	L33Z
	21B	X06A X06B X06C
	22	Y02A Y02B Y02C
44.31.00↔		BORP MBOR VAC
		VAC I VAC II VBOR
	04	E36A E36B
	06	G12A G16A G16B
		G18A G18B G19A
		G19B G33Z G38A
		G38B G38C
	07	H12A H33Z
	11	L33Z
	21B	X07A X07B
44.31.09↔		BORP MBOR VAC
		VAC I VAC II VBOR
	04	E36A E36B
	06	G12A G16A G16B
		G18A G18B G19A
		G19B G33Z G38A
		G38B G38C
	07	H12A H33Z
	11	L33Z
	21B	X07A X07B
44.31.11↔		BORP KORP MBOR
		MKOR VAC VAC I
		VAC II VBOR VKOR
	04	E36A E36B
	06	G12A G16A G16B
		G18A G18B G19A
		G19B G33Z G38A
		G38B G38C
	07	H12A H33Z
	11	L33Z
	21B	X07A X07B
44.31.12↔		BORP KORP MBOR
		MKOR VAC VAC I
		VAC II VBOR VKOR
	04	E36A E36B
	06	G12A G16A G16B
		G18A G18B G19A
		G19B G33Z G38A
		G38B G38C
	07	H12A H33Z
	11	L33Z
	21B	X07A X07B
44.31.13↔		BORP KORP MBOR

PROC

PROC

CHOP	MDC	DRG
		MKOR VAC VAC I
		VAC II VBOR VKOR
	04	E36A E36B
	06	G12A G16A G16B
		G18A G18B G19A
		G19B G33Z G38A
		G38B G38C
	07	H12A H33Z
	11	L33Z
	21B	X07A X07B
44.31.14↔		BORP KORP MBOR
		MKOR VAC VAC I
		VAC II VBOR VKOR
	04	E36A E36B
	06	G12A G16A G16B
		G18A G18B G19A
		G19B G33Z G38A
		G38B G38C
	07	H12A H33Z
	11	L33Z
	21B	X07A X07B
44.31.15↔		BORP KORP MBOR
		MKOR VAC VAC I
		VAC II VBOR VKOR
	04	E36A E36B
	06	G12A G16A G16B
		G18A G18B G19A
		G19B G33Z G38A
		G38B G38C
	07	H12A H33Z
	11	L33Z
	21B	X07A X07B
44.31.16↔		BORP KORP MBOR
		MKOR VAC VAC I
		VAC II VBOR VKOR
	04	E36A E36B
	06	G12A G16A G16B
		G18A G18B G19A
		G19B G33Z G38A
		G38B G38C
	07	H12A H33Z
	11	L33Z
	21B	X07A X07B
44.31.21↔		BORP MBOR VAC
		VAC I VAC II VBOR
	04	E36A E36B
	06	G12A G16A G16B
		G18A G18B G19A
		G19B G33Z G38A
		G38B G38C
	07	H12A H33Z
	11	L33Z
	21B	X07A X07B
44.31.22↔		BORP MBOR VAC
		VAC I VAC II VBOR
	04	E36A E36B
	06	G12A G16A G16B
		G18A G18B G19A
		G19B G33Z G38A
		G38B G38C
	07	H12A H33Z
	11	L33Z
	21B	X07A X07B
44.31.31↔		BORP MBOR VAC
		VAC I VAC II VBOR
	04	E36A E36B
	06	G12A G16A G16B
		G18A G18B G19A
		G19B G33Z G38A
		G38B G38C
	07	H12A H33Z
	11	L33Z
	21B	X07A X07B
44.31.32↔		BORP MBOR VAC
		VAC I VAC II VBOR
	04	E36A E36B
	06	G12A G16A G16B
		G18A G18B G19A
		G19B G33Z G38A
		G38B G38C
	07	H12A H33Z
	11	L33Z
	21B	X07A X07B
44.31.41↔		BORP KORP MBOR
		MKOR VAC VAC I
		VAC II VBOR VKOR
	04	E36A E36B
	06	G12A G16A G16B
		G18A G18B G19A
		G19B G33Z G38A
		G38B G38C
	07	H12A H33Z
	11	L33Z
	21B	X07A X07B
44.31.42↔		BORP KORP MBOR
		MKOR VAC VAC I
		VAC II VBOR VKOR
	04	E36A E36B
	06	G12A G16A G16B
		G18A G18B G19A
		G19B G33Z G38A
		G38B G38C
	07	H12A H33Z
	11	L33Z
	21B	X07A X07B
44.33‡↔	01	B60A
	04	E71B E75A E77A
	06	G46A G46B G46C
		G72A G86C
	07	H61A H64A
44.38↔		BORP MBOR VAC
		VAC I VAC II VBOR
	04	E36A E36B
	06	G12A G16A G16B
		G18A G18B G19A
		G19B G33Z G38A
		G38B G38C
	07	H12A H33Z
	11	L33Z
	21B	X07A X07B
44.39↔		BORP MBOR VAC
		VAC I VAC II VBOR
	04	E36A E36B
	06	G12A G16A G16B
		G18A G18B G19A
		G19B G33Z G38A
		G38B G38C
	07	H12A H33Z
	11	L33Z
	21B	X07A X07B
44.40↔		BORP MBOR VAC
		VAC I VAC II VBOR
	04	E36A E36B
	06	G12A G16A G16B
		G18A G18B G19A
		G19B G38A G38B
		G38C
	07	H33Z
44.41↔		BORP MBOR VAC
		VAC I VAC II VBOR
	04	E36A E36B
	06	G12A G16A G16B
		G18A G18B G19A
		G19B G38A G38B
		G38C
	07	H33Z
44.42↔		BORP MBOR VAC
		VAC I VAC II VBOR
	04	E36A E36B
	06	G12A G16A G16B
		G18A G18B G19A
		G19B G38A G38B
		G38C
	07	H33Z
	21B	X07A X07B
44.43.00‡↔	01	B60A
	04	E71B E75A E77A
	06	G46A G46B G46C
		G46D G72A G86C
	07	H61A
44.43.10‡↔	01	B60A
	04	E71B E75A E77A
	06	G46A G46B G46C
		G46D G72A G86C
	07	H61A
44.43.20‡↔	01	B60A
	04	E71B E75A E77A
	06	G46A G46B G46C
		G46D G72A G86C
	07	H61A
44.43.99‡↔	01	B60A
	04	E71B E75A E77A
	06	G46A G46B G46C
		G46D G72A G86C
	07	H61A
44.44↔	03	D12A
	04	E02A E02B
	05	F21A F21B F21C
		F59A
	06	G12A G12B
	07	H06Z
	08	I28A I28B
	09	J11A
	10	K09A K09B
	11	L09A L09B
	12	M06Z M37Z
	13	N11A N11B
	14	O02A O02B
	21B	X06A X06B X06C
44.49.10↔		BORP MBOR VAC
		VAC I VAC II VBOR
	04	E36A E36B
	06	G12A G16A G16B
		G18A G18B G19A
		G19B G38A G38B
		G38C
	07	H06Z H33Z
44.49.11↔		BORP MBOR VAC
		VAC I VAC II VBOR
	04	E36A E36B
	06	G12A G16A G16B
		G18A G18B G19A
		G19B G38A G38B
		G38C
	07	H06Z H33Z
44.49.20↔		BORP MBOR VAC
		VAC I VAC II VBOR
	04	E36A E36B
	06	G12A G16A G16B
		G18A G18B G19A

CHOP	MDC	DRG
		G19B G38A G38B
		G38C
	07	H06Z H33Z
44.49.21↔		BORP MBOR VAC
		VAC I VAC II VBOR
	04	E36A E36B
	06	G12A G16A G16B
		G18A G18B G19A
		G19B G38A G38B
		G38C
	07	H06Z H33Z
44.49.30↔		BORP MBOR VAC
		VAC I VAC II VBOR
	04	E36A E36B
	06	G12A G16A G16B
		G18A G18B G19A
		G19B G38A G38B
		G38C
	07	H06Z H33Z
44.5X.00↔		BORP MBOR VAC
		VAC I VAC II VBOR
	04	E36A E36B
	06	G02A G02B G12A
		G16A G16B G18A
		G18B G19A G19B
		G38A G38B G38C
	07	H06Z H33Z
	11	L33Z
	21B	X06A X06B X06C
		X07A X07B
	22	Y02A Y02B Y02C
44.5X.10↔		BORP MBOR VAC
		VAC I VAC II VBOR
	04	E36A E36B
	06	G02A G02B G12A
		G16A G16B G18A
		G18B G19A G19B
		G38A G38B G38C
	07	H06Z H33Z
	11	L33Z
	21B	X06A X06B X06C
		X07A X07B
	22	Y02A Y02B Y02C
44.5X.21↔		BORP MBOR VAC
		VAC I VAC II VBOR
	04	E36A E36B
	06	G02A G02B G12A
		G16A G16B G18A
		G18B G19A G19B
		G38A G38B G38C
	07	H06Z H33Z
	11	L33Z
	21B	X06A X06B X06C
		X07A X07B
	22	Y02A Y02B Y02C
44.5X.22↔		BORP MBOR VAC
		VAC I VAC II VBOR
	04	E36A E36B
	06	G02A G02B G12A
		G16A G16B G18A
		G18B G19A G19B
		G38A G38B G38C
	07	H06Z H33Z
	11	L33Z
	21B	X06A X06B X06C
		X07A X07B
	22	Y02A Y02B Y02C
44.5X.33↔		BORP MBOR VAC
		VAC I VAC II VBOR
	04	E36A E36B
	06	G02A G02B G12A
		G16A G16B G18A
		G18B G19A G19B
		G38A G38B G38C
	07	H06Z H33Z
	11	L33Z
	21B	X06A X06B X06C
		X07A X07B
	22	Y02A Y02B Y02C
44.5X.34↔		BORP MBOR VAC
		VAC I VAC II VBOR
	04	E36A E36B
	06	G02A G02B G12A
		G16A G16B G18A
		G18B G19A G19B
		G38A G38B G38C
	07	H06Z H33Z
	11	L33Z
	21B	X06A X06B X06C
		X07A X07B
	22	Y02A Y02B Y02C
44.5X.35↔		BORP MBOR VAC
		VAC I VAC II VBOR
	04	E36A E36B
	06	G02A G02B G12A
		G16A G16B G18A
		G18B G19A G19B
		G38A G38B G38C
	07	H06Z H33Z
	11	L33Z
	21B	X06A X06B X06C
		X07A X07B
	22	Y02A Y02B Y02C
44.5X.36↔		BORP MBOR VAC
		VAC I VAC II VBOR
	04	E36A E36B
	06	G02A G02B G12A
		G16A G16B G18A
		G18B G19A G19B
		G38A G38B G38C
	07	H06Z H33Z
	11	L33Z
	21B	X06A X06B X06C
		X07A X07B
	22	Y02A Y02B Y02C
44.5X.41↔		BORP MBOR VAC
		VAC I VAC II VBOR
	04	E36A E36B
	06	G02A G02B G12A
		G16A G16B G18A
		G18B G19A G19B
		G38A G38B G38C
	07	H06Z H33Z
	11	L33Z
	21B	X06A X06B X06C
		X07A X07B
	22	Y02A Y02B Y02C
44.5X.42↔		BORP MBOR VAC
		VAC I VAC II VBOR
	04	E36A E36B
	06	G02A G02B G12A
		G16A G16B G18A
		G18B G19A G19B
		G38A G38B G38C
	07	H06Z H33Z
	11	L33Z
	21B	X06A X06B X06C
		X07A X07B
	22	Y02A Y02B Y02C
44.5X.43↔		BORP MBOR VAC
		VAC I VAC II VBOR
	04	E36A E36B
	06	G02A G02B G12A
		G16A G16B G18A
		G18B G19A G19B
		G38A G38B G38C
	07	H06Z H33Z
	11	L33Z
	21B	X06A X06B X06C
		X07A X07B
	22	Y02A Y02B Y02C
44.5X.44↔		BORP MBOR VAC
		VAC I VAC II VBOR
	04	E36A E36B
	06	G02A G02B G12A
		G16A G16B G18A
		G18B G19A G19B
		G38A G38B G38C
	07	H06Z H33Z
	11	L33Z
	21B	X06A X06B X06C
		X07A X07B
	22	Y02A Y02B Y02C
44.5X.51↔		BORP MBOR VAC
		VAC I VAC II VBOR
	04	E36A E36B
	06	G02A G02B G12A
		G16A G16B G18A
		G18B G19A G19B
		G38A G38B G38C
	07	H06Z H33Z
	11	L33Z
	21B	X06A X06B X06C
		X07A X07B
	22	Y02A Y02B Y02C
44.5X.52↔		BORP MBOR VAC
		VAC I VAC II VBOR
	04	E36A E36B
	06	G02A G02B G12A
		G16A G16B G18A
		G18B G19A G19B
		G38A G38B G38C
	07	H06Z H33Z
	11	L33Z
	21B	X06A X06B X06C
		X07A X07B
	22	Y02A Y02B Y02C
44.5X.99↔		BORP MBOR VAC
		VAC I VAC II VBOR
	04	E36A E36B
	06	G02A G02B G12A
		G16A G16B G18A
		G18B G19A G19B
		G38A G38B G38C
	07	H06Z H33Z
	11	L33Z
	21B	X06A X06B X06C
		X07A X07B
	22	Y02A Y02B Y02C
44.61↔		BORP MBOR VAC
		VAC I VAC II VBOR
	04	E36A E36B
	06	G12A G16A G16B
		G18A G18B G19A
		G19B G38A G38B
		G38C
	07	H33Z
	11	L33Z
	21B	X06A X06B
44.63.00↔		BORP MBOR VAC

PROC

CHOP	MDC	DRG
		VAC I VAC II VBOR
	04	E36A E36B
	06	G02A G02B G12A
		G16A G16B G18A
		G18B G38A G38B
		G38C
	07	H33Z
	21B	X06A X06B X06C
		X07A X07B
44.63.10‡↔	01	B60A
	04	E71B E75A E77A
	06	G46A G46B G46C
		G46D G72A G86C
44.63.11↔		BORP MBOR VAC
		VAC I VAC II VBOR
	04	E36A E36B
	06	G02A G02B G12A
		G16A G16B G18A
		G18B G38A G38B
		G38C
	07	H33Z
	21B	X06A X06B X06C
		X07A X07B
44.63.12↔		BORP MBOR VAC
		VAC I VAC II VBOR
	04	E36A E36B
	06	G02A G02B G12A
		G16A G16B G18A
		G18B G38A G38B
		G38C
	07	H33Z
	21B	X06A X06B X06C
		X07A X07B
44.63.99↔		BORP MBOR VAC
		VAC I VAC II VBOR
	04	E36A E36B
	06	G02A G02B G12A
		G16A G16B G18A
		G18B G38A G38B
		G38C
	07	H33Z
	21B	X06A X06B X06C
		X07A X07B
44.64↔		BORP MBOR VAC
		VAC I VAC II VBOR
	04	E36A E36B
	06	G12A G16A G16B
		G18A G18B G19A
		G19B G38A G38B
		G38C
	07	H33Z
	11	L33Z
	21B	X06A X06B
44.65.00↔		BORP MBOR VAC
		VAC I VAC II VBOR
	04	E36A E36B
	06	G12A G16A G16B
		G18A G18B G19A
		G19B G38A G38B
		G38C
	07	H33Z
	11	L33Z
	21B	X06A X06B
44.65.10↔		BORP MBOR VAC
		VAC I VAC II VBOR
	04	E36A E36B
	06	G12A G16A G16B
		G18A G18B G19A
		G19B G38A G38B
		G38C
	07	H33Z
	11	L33Z
	21B	X06A X06B
44.65.20↔		BORP MBOR VAC
		VAC I VAC II VBOR
	04	E36A E36B
	06	G12A G16A G16B
		G18A G18B G19A
		G19B G38A G38B
		G38C
	07	H33Z
	11	L33Z
	21B	X06A X06B
44.65.99↔		BORP MBOR VAC
		VAC I VAC II VBOR
	04	E36A E36B
	06	G12A G16A G16B
		G18A G18B G19A
		G19B G38A G38B
		G38C
	07	H33Z
	11	L33Z
	21B	X06A X06B
44.66.00↔		BORP MBOR VAC
		VAC I VAC II VBOR
	04	E36A E36B
	06	G02A G02B G12A
		G16A G16B G18A
		G18B G19A G19B
		G38A G38B G38C
	07	H33Z
	11	L33Z
	21B	X06A X06B
44.66.11↔		BORP MBOR VAC
		VAC I VAC II VBOR
	04	E36A E36B
	06	G02A G02B G12A
		G16A G16B G18A
		G18B G19A G19B
		G38A G38B G38C
	07	H33Z
	11	L33Z
	21B	X06A X06B
44.66.99↔		BORP MBOR VAC
		VAC I VAC II VBOR
	04	E36A E36B
	06	G12A G16A G16B
		G18A G18B G19A
		G19B G38A G38B
		G38C
	07	H33Z
	11	L33Z
	21B	X06A X06B
44.67.00↔		BORP MBOR VAC
		VAC I VAC II VBOR
	04	E36A E36B
	06	G02A G02B G12A
		G16A G16B G18A
		G18B G19A G19B
		G19C G38A G38B
		G38C
	07	H33Z
	11	L33Z
	21B	X06A X06B
44.67.10↔		BORP MBOR VAC
		VAC I VAC II VBOR
	04	E36A E36B
	06	G02A G02B G12A
		G16A G16B G18A
		G18B G19A G19B
		G19C G38A G38B
		G38C
	07	H33Z
	11	L33Z
	21B	X06A X06B
44.67.20↔		BORP MBOR VAC
		VAC I VAC II VBOR
	04	E36A E36B
	06	G02A G02B G12A
		G16A G16B G18A
		G18B G19A G19B
		G19C G38A G38B
		G38C
	07	H33Z
	11	L33Z
	21B	X06A X06B
44.67.99↔		BORP MBOR VAC
		VAC I VAC II VBOR
	04	E36A E36B
	06	G12A G16A G16B
		G18A G18B G19A
		G19B G19C G38A
		G38B G38C
	07	H33Z
	11	L33Z
	21B	X06A X06B
44.68↔		BORP MBOR VAC
		VAC I VAC II VBOR
	04	E36A E36B
	06	G12A G16A G16B
		G18A G18B G19A
		G19B G19C G38A
		G38B G38C
	07	H33Z
	11	L33Z
	21B	X06A X06B
44.69↔		BORP MBOR VAC
		VAC I VAC II VBOR
	04	E36A E36B
	06	G12A G16A G16B
		G18A G18B G19A
		G19B G38A G38B
		G38C
	07	H33Z
	11	L33Z
	21B	X06A X06B
44.91↔		BORP MBOR VAC
		VAC I VAC II VBOR
	04	E36A E36B
	06	G12A G16A G16B
		G18A G18B G19A
		G19B G38A G38B
		G38C
	07	H06Z H33Z
44.92↔		BORP MBOR VAC
		VAC I VAC II VBOR
	04	E36A E36B
	06	G12A G16A G16B
		G18A G18B G19A
		G19B G38A G38B
		G38C
	07	H06Z H33Z
	21B	X06A X06B X06C
44.93↔		BORP MBOR VAC
		VAC I VAC II VBOR
	04	E36A E36B
	06	G12A G12B G16A
		G38A G38B
	07	H33Z
	11	L33Z

CHOP	MDC	DRG
	21B	X06A X06B
44.94↔		BORP MBOR VAC
		VAC I VAC II VBOR
	04	E36A E36B
	06	G12A G12B G16A
		G38A G38B
	07	H33Z
	11	L33Z
	21B	X06A X06B
44.95.00↔		BORP MBOR VAC
		VAC I VAC II VBOR
	04	E36A E36B
	06	G12A G12B G16A
		G38A G38B
	07	H33Z
	11	L33Z
	21B	X06A X06B
44.95.09↔		BORP MBOR VAC
		VAC I VAC II VBOR
	04	E36A E36B
	06	G12A G12B G16A
		G38A G38B
	07	H33Z
	11	L33Z
	21B	X06A X06B
44.95.11↔		BORP MBOR VAC
		VAC I VAC II VBOR
	04	E36A E36B
	06	G12A G12B G16A
		G38A G38B
	07	H33Z
	11	L33Z
	21B	X06A X06B
44.95.12↔		BORP MBOR VAC
		VAC I VAC II VBOR
	04	E36A E36B
	06	G12A G12B G16A
		G38A G38B
	07	H33Z
	11	L33Z
	21B	X06A X06B
44.95.21↔		BORP MBOR VAC
		VAC I VAC II VBOR
	04	E36A E36B
	06	G12A G16A G16B
		G18A G18B G19A
		G19B G19C G38A
		G38B G38C
	07	H33Z
	11	L33Z
	21B	X06A X06B
44.95.22↔		BORP MBOR VAC
		VAC I VAC II VBOR
	04	E36A E36B
	06	G12A G16A G16B
		G18A G18B G19A
		G19B G19C G38A
		G38B G38C
	07	H33Z
	11	L33Z
	21B	X06A X06B
44.95.31‡↔	01	B60A
	04	E71B E75A E77A
	06	G46A G46B G46C
		G72A G86C
44.96.00↔		BORP MBOR VAC
		VAC I VAC II VBOR
	04	E36A E36B
	06	G12A G12B G16A
		G38A G38B
	07	H33Z
	11	L33Z
	21B	X06A X06B
44.96.11↔		BORP MBOR VAC
		VAC I VAC II VBOR
	04	E36A E36B
	06	G12A G12B G16A
		G38A G38B
	07	H33Z
	11	L33Z
	21B	X06A X06B
44.96.12↔		BORP MBOR VAC
		VAC I VAC II VBOR
	04	E36A E36B
	06	G12A G12B G16A
		G38A G38B
	07	H33Z
	11	L33Z
	21B	X06A X06B
44.96.13↔		BORP MBOR VAC
		VAC I VAC II VBOR
	04	E36A E36B
	06	G12A G12B G16A
		G38A G38B
	07	H33Z
	11	L33Z
	21B	X06A X06B
44.96.14↔		BORP MBOR VAC
		VAC I VAC II VBOR
	04	E36A E36B
	06	G12A G12B G16A
		G38A G38B
	07	H33Z
	11	L33Z
	21B	X06A X06B
44.96.15‡↔	01	B60A
	04	E71B E75A E77A
	06	G46A G46B G46C
		G46D G72A G86C
44.96.16↔		BORP MBOR VAC
		VAC I VAC II VBOR
	04	E36A E36B
	06	G12A G12B G16A
		G38A G38B
	07	H33Z
	11	L33Z
	21B	X06A X06B
44.96.17↔		BORP MBOR VAC
		VAC I VAC II VBOR
	04	E36A E36B
	06	G12A G12B G16A
		G38A G38B
	07	H33Z
	11	L33Z
	21B	X06A X06B
44.96.18↔		BORP MBOR VAC
		VAC I VAC II VBOR
	04	E36A E36B
	06	G12A G12B G16A
		G38A G38B
	07	H33Z
	11	L33Z
	21B	X06A X06B
44.96.99↔		BORP MBOR VAC
		VAC I VAC II VBOR
	04	E36A E36B
	06	G12A G12B G16A
		G38A G38B
	07	H33Z
	11	L33Z
	21B	X06A X06B
44.97.00↔		BORP MBOR VAC
		VAC I VAC II VBOR
	04	E36A E36B
	06	G12A G12B G16A
		G38A G38B
	07	H33Z
	11	L33Z
	21B	X06A X06B
44.97.11↔		BORP MBOR VAC
		VAC I VAC II VBOR
	04	E36A E36B
	06	G12A G12B G16A
		G38A G38B
	07	H33Z
	11	L33Z
	21B	X06A X06B
44.97.12↔		BORP MBOR VAC
		VAC I VAC II VBOR
	04	E36A E36B
	06	G12A G12B G16A
		G38A G38B
	07	H33Z
	11	L33Z
	21B	X06A X06B
44.97.99↔		BORP MBOR VAC
		VAC I VAC II VBOR
	04	E36A E36B
	06	G12A G12B G16A
		G38A G38B
	07	H33Z
	11	L33Z
	21B	X06A X06B
44.99.00‡↔	01	B60A
	04	E71B E75A E77A
	06	G46A G46B G46C
		G46D G72A G86C
44.99.10‡↔	01	B60A
	04	E71B E75A E77A
	06	G46A G46B G46C
		G46D G72A G86C
44.99.11↔		BORP MBOR VAC
		VAC I VAC II VBOR
	04	E36A E36B
	06	G12A G12B G16A
		G38A G38B
	07	H33Z
44.99.12↔		BORP MBOR VAC
		VAC I VAC II VBOR
	04	E36A E36B
	06	G12A G12B G16A
		G38A G38B
	07	H33Z
44.99.20‡↔	01	B60A
	04	E71B E75A E77A
	06	G46A G46B G46C
		G46D G72A G86C
44.99.21↔		BORP MBOR VAC
		VAC I VAC II VBOR
	04	E36A E36B
	06	G12A G12B G16A
		G38A G38B
	07	H33Z
44.99.22↔		BORP MBOR VAC
		VAC I VAC II VBOR
	04	E36A E36B
	06	G12A G12B G16A
		G38A G38B
	07	H33Z
44.99.30‡↔	01	B60A

PROC

CHOP	MDC	DRG
	04	E71B E75A E77A
	06	G46A G46B G46C G46D G72A G86C
44.99.50‡↔	01	B60A
	04	E71B E75A E77A
	06	G46A G46B G46C G46D G72A G86C
44.99.51↔		BORP MBOR VAC VAC I VAC II VBOR
	04	E36A E36B
	06	G12A G12B G16A G38A G38B
	07	H33Z
44.99.52↔		BORP MBOR VAC VAC I VAC II VBOR
	04	E36A E36B
	06	G12A G12B G16A G38A G38B
	07	H33Z
44.99.60‡↔	01	B60A
	04	E71B E75A E77A
	06	G46A G46B G46C G72A G86C
	07	H61A H64A
44.99.61↔		BORP MBOR VAC VAC I VAC II VBOR
	04	E36A E36B
	06	G12A G12B G16A G38A G38B
	07	H33Z
44.99.62↔		BORP MBOR VAC VAC I VAC II VBOR
	04	E36A E36B
	06	G12A G12B G16A G38A G38B
	07	H33Z
44.99.70‡↔	01	B60A
	04	E71B E75A E77A
	06	G46A G46B G46C G46D G72A G86C
44.99.71↔		BORP MBOR VAC VBOR
	04	E36A E36B
	06	G12A G12B G16A G38A G38B
	07	H33Z
44.99.72↔		BORP MBOR VAC VBOR
	04	E36A E36B
	06	G12A G12B G16A G38A G38B
	07	H33Z
44.99.80↔		BORP MBOR VAC VAC I VAC II VBOR
	01	B21A B21B B21C B21D B21E B21F
	04	E36A E36B
	06	G12A G12B G16A G38A G38B
	07	H33Z
44.99.81↔		BORP MBOR VAC VAC I VAC II VBOR
	04	E36A E36B
	06	G12A G12B G16A G38A G38B
	07	H33Z
44.99.90‡↔	01	B60A
	04	E71B E75A E77A
	06	G46A G46B G46C G46D G72A G86C
44.99.91↔		BORP MBOR VAC VBOR
	04	E36A E36B
	06	G12A G12B G16A G38A G38B
	07	H33Z
45.00‡↔	01	B60A
	04	E71B E75A E77A
	06	G46A G46B G46C G46D G72A G86C
45.01‡↔	01	B60A
	06	G04A G04B G38A G38B G38C
45.02‡↔	01	B60A
	06	G04A G04B G38A G38B G38C
45.03‡↔	01	B60A
	06	G04A G04B G38A G38B G38C
45.04‡↔	01	B60A
	04	E71B E75A E77A
	06	G46A G46B G46C G46D G72A G86C
45.05‡↔	01	B60A
	04	E71B E75A E77A
	06	G46A G46B G46C G46D G72A G86C
45.11‡↔	01	B60A
	04	E71B E75A E77A
	06	G46A G46B G46C G46D G72A
45.12‡↔	01	B60A
	04	E71B E75A E77A
	06	G46A G46B G46C G46D G72A
45.13.10‡↔	01	B60A
	04	E71B E75A E77A
	06	G46A G46B G46C G46D G72A G86C
45.13.20‡↔	01	B60A
	04	E71B E75A E77A
	06	G46A G46B G46C G72A G86C
45.13.30‡↔	01	B60A
	04	E71B E75A E77A
	06	G46A G46B G46C G46D G72A G86C
45.13.31‡↔	01	B60A
	04	E71B E75A E77A
	06	G46A G46B G46C G46D G72A G86C
45.14‡↔		AKBB
	01	B60A
	04	E71B E75A E77A
	06	G46A G46B G46C G46D G72A G86C
	16	Q86A
45.15↔		BORP MBOR VAC VAC I VAC II VBOR
	04	E36A E36B
	06	G04A G04B G12A G16A G38A G38B G38C
45.16‡↔		AKBB
	01	B60A
	04	E71B E75A E77A
	06	G46A G46B G46C G46D G72A G86C
	16	Q86A
45.17‡↔		AKBB
	01	B60A
	04	E71B E75A E77A
	06	G46A G46B G46C G46D G72A G86C
	16	Q86A
45.21‡↔	01	B60A
	04	E71B E75A E77A
	06	G46A G46B G46C G46D G72A
45.22‡↔	01	B60A
	04	E71B E75A E77A
	06	G46A G46B G46C G46D G72A
45.23‡↔	01	B60A
	04	E71B E75A E77A
	06	G46A G46B G46C G46D G72A G86C
	07	H61A
45.24‡↔	01	B60A
	04	E71B E75A E77A
	06	G46A G46B G46C G46D G72A G86C
	07	H61A
45.25‡↔		AKBB
	01	B60A
	04	E71B E75A E77A
	06	G46A G46B G46C G46D G72A G86C
	07	H61A
	16	Q86A
45.26↔		BORP MBOR VAC VAC I VAC II VBOR
	04	E36A E36B
	06	G04A G04B G12A G16A G38A G38B G38C
45.28.10‡↔	01	B60A
	04	E71B E75A E77A
	06	G46A G46B G46C G72A
45.28.20‡↔	01	B60A
	04	E71B E75A E77A
	06	G46A G46B G46C G46D G72A
45.30.00‡↔	01	B60A
	04	E71B E75A E77A
	06	G46A G46B G46C G46D G72A G86C
45.30.10‡↔	01	B60A
	04	E71B E75A E77A
	06	G46A G46B G46C G46D G72A G86C
45.30.11‡↔	01	B60A
	04	E71B E75A E77A
	06	G46A G46B G46C G46D G72A G86C
45.30.20‡↔	01	B60A
	04	E71B E75A E77A
	06	G46A G46B G46C G46D G72A G86C
45.30.29‡↔	01	B60A
	04	E71B E75A E77A
	06	G46A G46B G46C G46D G72A G86C
45.30.99‡↔	01	B60A
	04	E71B E75A E77A
	06	G46A G46B G46C G46D G72A G86C
45.35.11‡↔	01	B60A
	04	E71B E75A E77A

CHOP	MDC	DRG
	06	G46A G46B G46C G46D G72A G86C
	07	H61A
45.35.21‡↔	01	B60A
	04	E71B E75A E77A
	06	G46A G46B G46C G46D G72A G86C
	07	H61A
45.41.00‡↔	01	B60A
	04	E71B E75A E77A
	06	G46A G46B G46C G46D G72A G86C
	07	H61A
45.41.09‡↔	01	B60A
	04	E71B E75A E77A
	06	G46A G46B G46C G46D G72A G86C
	07	H61A
45.41.11‡↔	01	B60A
	04	E71B E75A E77A
	06	G46A G46B G46C G46D G72A G86C
	07	H61A
45.41.12‡↔	01	B60A
	04	E71B E75A E77A
	06	G46A G46B G46C G46D G72A
45.41.13‡↔	01	B60A
	04	E71B E75A E77A
	06	G46A G46B G46C G46D G72A
45.41.14‡↔	01	B60A
	04	E71B E75A E77A
	06	G46A G46B G46C G46D G72A G86C
	07	H61A
45.41.15‡↔	01	B60A
	04	E71B E75A E77A
	06	G46A G46B G46C G46D G72A G86C
	07	H61A
45.41.21↔	06	G04A G04B G38A G38B G38C
	21B	X06A X06B
45.41.31↔	06	G04A G04B G38A G38B G38C
	21B	X06A X06B
45.50↔		BORP MBOR VAC VAC I VAC II VBOR
	04	E36A E36B
	06	G02A G02B G12A G16A G16B G18A G18B G33Z G38A G38B G38C
	07	H33Z
	11	L33Z
45.51↔		BORP MBOR VAC VAC I VAC II VBOR
	04	E36A E36B
	06	G02A G02B G12A G16A G16B G18A G18B G33Z G38A G38B G38C
	07	H33Z
	11	L33Z
	21B	X07A X07B
45.52↔		BORP MBOR VAC VAC I VAC II VBOR
	04	E36A E36B
	06	G02A G02B G12A G16A G16B G18A G18B G33Z G38A G38B G38C
	07	H33Z
	11	L33Z
	21B	X07A X07B
45.61↔		BORP MBOR MVE VAC VAC I VAC II VBOR
	04	E36A E36B
	06	G02A G02B G12A G16A G16B G33Z G38A G38B G38C
	07	H33Z
	10	K09A K09B
	11	L10A L10B L33Z
	12	M37Z
	13	N01A N01B N01C N01D N33Z N34Z
	21B	X06A X06B X07A X07B
45.62↔		BORP MBOR VAC VAC I VAC II VBOR
	04	E36A E36B
	06	G02A G02B G12A G16A G16B G18A G18B G33Z G38A G38B G38C
	07	H33Z
	10	K09A K09B
	11	L10A L10B L33Z
	13	N01A N01B N01C N01D N33Z N34Z
	21B	X06A X06B X07A X07B
45.63.00↔		BORP KORP MBOR MKOR VAC VAC I VAC II VBOR VKOR
	04	E36A E36B
	06	G02A G02B G12A G16A G16B G18A G18B G33Z G38A G38B G38C
	07	H33Z
	10	K09A K09B
	11	L10A L10B L33Z
	12	M37Z
	13	N01A N01B N01C N01D N33Z N34Z
	21B	X06A X06B X07A X07B
45.63.99↔		BORP KORP MBOR MKOR MVE VAC VAC I VAC II VBOR VKOR
	04	E36A E36B
	06	G02A G02B G12A G16A G16B G18A G18B G33Z G38A G38B G38C
	07	H33Z
	10	K09A K09B
	11	L10A L10B L33Z
	12	M37Z
	13	N01A N01B N01C N01D N33Z N34Z
	21B	X06A X06B X07A X07B
45.70↔		BORP MBOR VAC VAC I VAC II VBOR
	04	E36A E36B
	06	G02A G02B G12A G16A G16B G18A G18B G33Z G38A G38B G38C
	07	H33Z
	10	K09A K09B
	11	L10A L10B L33Z
	13	N01A N01B N01C N01D N33Z N34Z
	21B	X06A X06B X07A X07B
45.72.11↔		BORP MBOR VAC VAC I VAC II VBOR
	04	E36A E36B
	06	G02A G02B G12A G16A G16B G18A G18B G38A G38B G38C
	10	K09A K09B
	11	L10A L10B
	12	M37Z
	13	N01A N01B N01C N01D N33Z N34Z
	21B	X06A X06B
45.72.12↔		BORP MBOR VAC VAC I VAC II VBOR
	04	E36A E36B
	06	G02A G02B G12A G16A G16B G18A G18B G38A G38B G38C
	10	K09A K09B
	11	L10A L10B
	12	M37Z
	13	N01A N01B N01C N01D N33Z N34Z
	21B	X06A X06B
45.73.11↔		BORP MBOR VAC VAC I VAC II VBOR
	04	E36A E36B
	06	G02A G02B G12A G16A G16B G18A G18B G33Z G38A G38B G38C
	07	H33Z
	11	L10A L10B L33Z
	12	M37Z
	13	N01A N01B N01C N01D N33Z N34Z
	21B	X06A X06B X07A X07B
45.73.12↔		BORP MBOR VAC VAC I VAC II VBOR
	04	E36A E36B
	06	G02A G02B G12A G16A G16B G18A G18B G33Z G38A G38B G38C
	07	H33Z
	11	L10A L10B L33Z
	12	M37Z
	13	N01A N01B N01C N01D N33Z N34Z
	21B	X06A X06B X07A X07B
45.74.11↔		BORP KORP MBOR MKOR VAC VAC I VAC II VBOR VKOR
	04	E36A E36B

PROC

PROC

CHOP	MDC	DRG
	06	G02A G02B G12A
		G16A G16B G33Z
		G38A G38B G38C
	07	H33Z
	10	K09A K09B
	11	L10A L10B L33Z
	12	M37Z
	13	N01A N01B N01C
		N01D N33Z N34Z
	21B	X06A X06B X07A
		X07B
45.74.12↔		BORP KORP MBOR
		MKOR VAC VAC I
		VAC II VBOR VKOR
	04	E36A E36B
	06	G02A G02B G12A
		G16A G16B G33Z
		G38A G38B G38C
	07	H33Z
	10	K09A K09B
	11	L10A L10B L33Z
	12	M37Z
	13	N01A N01B N01C
		N01D N33Z N34Z
	21B	X06A X06B X07A
		X07B
45.75.11↔		BORP MBOR VAC
		VAC I VAC II VBOR
	04	E36A E36B
	06	G02A G02B G12A
		G16A G16B G18A
		G18B G33Z G38A
		G38B G38C
	07	H33Z
	10	K09A K09B
	11	L10A L10B L33Z
	12	M37Z
	13	N01A N01B N01C
		N01D N33Z N34Z
	21B	X06A X06B X07A
		X07B
45.75.12↔		BORP MBOR VAC
		VAC I VAC II VBOR
	04	E36A E36B
	06	G02A G02B G12A
		G16A G16B G18A
		G18B G33Z G38A
		G38B G38C
	07	H33Z
	10	K09A K09B
	11	L10A L10B L33Z
	12	M37Z
	13	N01A N01B N01C
		N01D N33Z N34Z
	21B	X06A X06B X07A
		X07B
45.75.21↔		BORP MBOR VAC
		VAC I VAC II VBOR
	04	E36A E36B
	06	G02A G02B G12A
		G16A G16B G18A
		G18B G33Z G38A
		G38B G38C
	07	H33Z
	10	K09A K09B
	11	L10A L10B L33Z
	12	M37Z
	13	N01A N01B N01C
		N01D N33Z N34Z
	21B	X06A X06B X07A
		X07B
45.75.22↔		BORP MBOR VAC
		VAC I VAC II VBOR
	04	E36A E36B
	06	G02A G02B G12A
		G16A G16B G18A
		G18B G33Z G38A
		G38B G38C
	07	H33Z
	10	K09A K09B
	11	L10A L10B L33Z
	12	M37Z
	13	N01A N01B N01C
		N01D N33Z N34Z
	21B	X06A X06B X07A
		X07B
45.76.00↔		BORP KORP MBOR
		MKOR VAC VAC I
		VAC II VBOR VKOR
	04	E36A E36B
	06	G02A G02B G12A
		G16A G16B G18A
		G18B G33Z G38A
		G38B G38C
	07	H33Z
	10	K09A K09B
	11	L10A L10B L33Z
	13	N01A N01B N01C
		N01D N33Z N34Z
	21B	X06A X06B X07A
		X07B
45.76.09↔		BORP KORP MBOR
		MKOR VAC VAC I
		VAC II VBOR VKOR
	04	E36A E36B
	06	G02A G02B G12A
		G16A G16B G18A
		G18B G33Z G38A
		G38B G38C
	07	H33Z
	10	K09A K09B
	11	L10A L10B L33Z
	12	M37Z
	13	N01A N01B N01C
		N01D N33Z N34Z
	21B	X06A X06B X07A
		X07B
45.76.11↔		BORP KORP MBOR
		MKOR VAC VAC I
		VAC II VBOR VKOR
	04	E36A E36B
	06	G02A G02B G12A
		G16A G16B G18A
		G18B G33Z G38A
		G38B G38C
	07	H33Z
	10	K09A K09B
	11	L10A L10B L33Z
	12	M37Z
	13	N01A N01B N01C
		N01D N33Z N34Z
	21B	X06A X06B X07A
		X07B
45.76.21↔		BORP KORP MBOR
		MKOR VAC VAC I
		VAC II VBOR VKOR
	04	E36A E36B
	06	G02A G02B G12A
		G16A G16B G18A
		G18B G33Z G38A
		G38B G38C
	07	H33Z
	10	K09A K09B
	11	L10A L10B L33Z
	12	M37Z
	13	N01A N01B N01C
		N01D N33Z N34Z
	21B	X06A X06B X07A
		X07B
45.77.11↔		BORP MBOR VAC
		VAC I VAC II VBOR
	04	E36A E36B
	06	G02A G02B G12A
		G16A G16B G18A
		G18B G33Z G38A
		G38B G38C
	07	H33Z
	10	K09A K09B
	11	L10A L10B L33Z
	12	M37Z
	13	N01A N01B N01C
		N01D N33Z N34Z
	21B	X06A X06B X07A
		X07B
45.77.12↔		BORP MBOR VAC
		VAC I VAC II VBOR
	04	E36A E36B
	06	G02A G02B G12A
		G16A G16B G18A
		G18B G33Z G38A
		G38B G38C
	07	H33Z
	10	K09A K09B
	11	L10A L10B L33Z
	12	M37Z
	13	N01A N01B N01C
		N01D N33Z N34Z
	21B	X06A X06B X07A
		X07B
45.77.21↔		BORP MBOR VAC
		VAC I VAC II VBOR
	04	E36A E36B
	06	G02A G02B G12A
		G16A G16B G18A
		G18B G33Z G38A
		G38B G38C
	07	H33Z
	10	K09A K09B
	11	L10A L10B L33Z
	12	M37Z
	13	N01A N01B N01C
		N01D N33Z N34Z
	21B	X06A X06B X07A
		X07B
45.77.22↔		BORP MBOR VAC
		VAC I VAC II VBOR
	04	E36A E36B
	06	G02A G02B G12A
		G16A G16B G18A
		G18B G33Z G38A
		G38B G38C
	07	H33Z
	10	K09A K09B
	11	L10A L10B L33Z
	12	M37Z
	13	N01A N01B N01C
		N01D N33Z N34Z
	21B	X06A X06B X07A
		X07B
45.78.11↔		BORP MBOR VAC

CHOP	MDC	DRG
		VAC I VAC II VBOR
	04	E36A E36B
	06	G02A G02B G12A G16A G16B G18A G18B G33Z G38A G38B G38C
	07	H33Z
	10	K09A K09B
	11	L10A L10B L33Z
	12	M37Z
	13	N01A N01B N01C N01D N33Z N34Z
	21B	X06A X06B X07A X07B
45.78.12↔		BORP MBOR VAC VAC I VAC II VBOR
	04	E36A E36B
	06	G02A G02B G12A G16A G16B G18A G18B G33Z G38A G38B G38C
	07	H33Z
	10	K09A K09B
	11	L10A L10B L33Z
	12	M37Z
	13	N01A N01B N01C N01D N33Z N34Z
	21B	X06A X06B X07A X07B
45.78.21↔		BORP MBOR MVE VAC VAC I VAC II VBOR
	04	E36A E36B
	06	G02A G02B G12A G16A G16B G18A G18B G33Z G38A G38B G38C
	07	H33Z
	10	K09A K09B
	11	L10A L10B L33Z
	12	M37Z
	13	N01A N01B N01C N01D N33Z N34Z
	21B	X06A X06B X07A X07B
45.78.22↔		BORP MBOR MVE VAC VAC I VAC II VBOR
	04	E36A E36B
	06	G02A G02B G12A G16A G16B G18A G18B G33Z G38A G38B G38C
	07	H33Z
	10	K09A K09B
	11	L10A L10B L33Z
	12	M37Z
	13	N01A N01B N01C N01D N33Z N34Z
	21B	X06A X06B X07A X07B
45.79↔		BORP MBOR MVE VAC VAC I VAC II VBOR
	04	E36A E36B
	06	G02A G02B G12A G16A G16B G18A G18B G33Z G38A G38B G38C
	07	H33Z
	10	K09A K09B
	11	L10A L10B L33Z
	12	M37Z
	13	N01A N01B N01C N01D N33Z N34Z
	21B	X06A X06B X07A X07B
45.80↔		BORP KORP MBOR MKOR VAC VAC I VAC II VBOR VKOR
	04	E36A E36B
	06	G02A G02B G12A G16A G16B G18A G18B G33Z G38A G38B G38C
	07	H33Z
	10	K09A K09B
	11	L10A L10B L33Z
	12	M37Z
	13	N01A N01B N01C N01D N33Z N34Z
	21B	X06A X06B X07A X07B
45.81.11↔		BORP KORP MBOR MKOR MVE VAC VAC I VAC II VBOR VKOR
	04	E36A E36B
	06	G02A G02B G12A G16A G16B G18A G18B G33Z G38A G38B G38C
	07	H33Z
	10	K09A K09B
	11	L10A L10B L33Z
	12	M37Z
	13	N01A N01B N01C N01D N33Z N34Z
	21B	X06A X06B X07A X07B
45.81.12↔		BORP KORP MBOR MKOR MVE VAC VAC I VAC II VBOR VKOR
	04	E36A E36B
	06	G02A G02B G12A G16A G16B G18A G18B G33Z G38A G38B G38C
	07	H33Z
	10	K09A K09B
	11	L10A L10B L33Z
	12	M37Z
	13	N01A N01B N01C N01D N33Z N34Z
	21B	X06A X06B X07A X07B
45.82.11↔		BORP KORP MBOR MKOR MVE VAC VAC I VAC II VBOR VKOR
	04	E36A E36B
	06	G02A G02B G12A G16A G16B G33Z G38A G38B G38C
	07	H33Z
	10	K09A K09B
	11	L10A L10B L33Z
	12	M37Z
	13	N01A N01B N01C N01D N33Z N34Z
	21B	X06A X06B X07A X07B
45.82.12↔		BORP KORP MBOR MKOR MVE VAC VAC I VAC II VBOR VKOR
	04	E36A E36B
	06	G02A G02B G12A G16A G16B G33Z G38A G38B G38C
	07	H33Z
	10	K09A K09B
	11	L10A L10B L33Z
	12	M37Z
	13	N01A N01B N01C N01D N33Z N34Z
	21B	X06A X06B X07A X07B
45.89↔		BORP KORP MBOR MKOR MVE VAC VAC I VAC II VBOR VKOR
	04	E36A E36B
	06	G02A G02B G12A G16A G16B G18A G18B G33Z G38A G38B G38C
	07	H33Z
	10	K09A K09B
	11	L10A L10B L33Z
	12	M37Z
	13	N01A N01B N01C N01D N33Z N34Z
	21B	X06A X06B X07A X07B
45.90↔		BORP MBOR VAC VAC I VAC II VBOR
	04	E36A E36B
	06	G02A G02B G12A G16A G16B G18A G18B G33Z G38A G38B G38C
	07	H33Z
	11	L33Z
	13	N11A N11B
	21B	X06A X06B X06C
45.91↔		BORP MBOR VAC VAC I VAC II VBOR
	04	E36A E36B
	06	G02A G02B G12A G16A G16B G18A G18B G33Z G38A G38B G38C
	07	H01A H01B H01C H09A H09B H09C H33Z
	11	L33Z
	13	N11A N11B
	21B	X06A X06B X06C X07A X07B
45.92.11↔		BORP MBOR VAC VAC I VAC II VBOR
	04	E36A E36B
	06	G02A G02B G12A G16A G16B G18A G18B G33Z G38A G38B G38C
	07	H33Z
	10	K09A K09B
	11	L33Z

PROC

PROC

CHOP	MDC	DRG
	13	N11A N11B
	21B	X06A X06B X06C
		X07A X07B
45.92.12↔		BORP MBOR VAC
		VAC I VAC II VBOR
	04	E36A E36B
	06	G02A G02B G12A
		G16A G16B G18A
		G18B G33Z G38A
		G38B G38C
	07	H33Z
	10	K09A K09B
	11	L33Z
	13	N11A N11B
	21B	X06A X06B X06C
		X07A X07B
45.93↔		BORP MBOR VAC
		VAC I VAC II VBOR
	04	E36A E36B
	06	G02A G02B G12A
		G16A G16B G18A
		G18B G33Z G38A
		G38B G38C
	07	H33Z
	11	L33Z
	13	N11A N11B
	21B	X06A X06B X06C
		X07A X07B
45.94↔		BORP MBOR VAC
		VAC I VAC II VBOR
	04	E36A E36B
	06	G02A G02B G12A
		G16A G16B G18A
		G18B G33Z G38A
		G38B G38C
	07	H33Z
	11	L33Z
	13	N11A N11B
	21B	X06A X06B X06C
		X07A X07B
45.95.11↔		BORP MBOR VAC
		VAC I VAC II VBOR
	04	E36A E36B
	06	G02A G02B G12A
		G16A G16B G18A
		G18B G33Z G38A
		G38B G38C
	07	H33Z
	11	L33Z
	13	N11A N11B
	21B	X06A X06B X06C
		X07A X07B
45.95.12↔		BORP MBOR VAC
		VAC I VAC II VBOR
	04	E36A E36B
	06	G02A G02B G12A
		G16A G16B G18A
		G18B G33Z G38A
		G38B G38C
	07	H33Z
	11	L33Z
	13	N11A N11B
	21B	X06A X06B X06C
		X07A X07B
45.95.21↔		BORP MBOR VAC
		VAC I VAC II VBOR
	04	E36A E36B
	06	G02A G02B G12A
		G16A G16B G18A
		G18B G33Z G38A

CHOP	MDC	DRG
		G38B G38C
	07	H33Z
	11	L33Z
	13	N11A N11B
	21B	X06A X06B X06C
		X07A X07B
45.96↔		BORP MBOR VAC
		VAC I VAC II VBOR
	04	E36A E36B
	06	G02A G02B G12A
		G16A G16B G18A
		G18B G33Z G38A
		G38B G38C
	07	H33Z
	11	L33Z
	13	N11A N11B
	21B	X06A X06B X06C
		X07A X07B
45.97.11↔		BORP KORP MBOR
		MKOR VAC VAC I
		VAC II VBOR VKOR
	04	E36A E36B
	06	G02A G02B G12A
		G16A G16B G18A
		G18B G33Z G38A
		G38B G38C
	07	H33Z
	11	L33Z
	13	N11A N11B
	21B	X06A X06B X06C
		X07A X07B
45.97.12↔		BORP KORP MBOR
		MKOR VAC VAC I
		VAC II VBOR VKOR
	04	E36A E36B
	06	G02A G02B G12A
		G16A G16B G18A
		G18B G33Z G38A
		G38B G38C
	07	H33Z
	11	L33Z
	13	N11A N11B
	21B	X06A X06B X06C
		X07A X07B
45.98.11↔		BORP MBOR VAC
		VAC I VAC II VBOR
	04	E36A E36B
	05	F04Z F13A F13B
	06	G12A G16A G16B
		G18A G18B G38A
		G38B G38C
	13	N11A N11B
	21B	X06A X06B
45.98.12↔		BORP MBOR VAC
		VAC I VAC II VBOR
	04	E36A E36B
	05	F04Z F13A F13B
	06	G12A G16A G16B
		G18A G18B G38A
		G38B G38C
	13	N11A N11B
	21B	X06A X06B
45.98.13↔		BORP MBOR VAC
		VAC I VAC II VBOR
	04	E36A E36B
	06	G02A G02B G12A
		G16A G16B G18A
		G18B G33Z G38A
		G38B G38C
	07	H33Z

CHOP	MDC	DRG
	11	L33Z
	13	N11A N11B
	21B	X06A X06B X06C
		X07A X07B
45.99↔		BORP MBOR VAC
		VAC I VAC II VBOR
	04	E36A E36B
	06	G02A G02B G12A
		G16A G16B G18A
		G18B G33Z G38A
		G38B G38C
	07	H33Z
	11	L33Z
	13	N11A N11B
	21B	X06A X06B X06C
46.02↔		BORP MBOR VAC
		VAC I VAC II VBOR
	04	E36A E36B
	06	G02A G02B G12A
		G13A G13B G16A
		G38A G38B G38C
	13	N11A N11B
	21B	X06A X06B X06C
46.04↔		BORP MBOR VAC
		VAC I VAC II VBOR
	04	E36A E36B
	06	G02A G02B G12A
		G13A G13B G16A
		G38A G38B G38C
	13	N11A N11B
	21B	X06A X06B X06C
46.10↔		BORP MBOR VAC
		VBOR
	04	E36A E36B
	06	G02A G02B G12A
		G16A G16B G18A
		G18B G38A G38B
		G38C
	13	N01D N11A
	21B	X06A X06B X06C
46.12.11↔		BORP KORP MBOR
		MKOR VAC VAC I
		VAC II VBOR VKOR
	04	E36A E36B
	06	G02A G02B G12A
		G13A G13B G16A
		G16B G18A G18B
		G38A G38B G38C
	07	H33Z
	11	L10A L10B L33Z
	12	M37Z
	13	N01D N11A
	21B	X06A X06B X06C
		X07A X07B
46.12.12↔		BORP KORP MBOR
		MKOR VAC VAC I
		VAC II VBOR VKOR
	04	E36A E36B
	06	G02A G02B G12A
		G13A G13B G16A
		G16B G18A G18B
		G38A G38B G38C
	07	H33Z
	11	L10A L10B L33Z
	12	M37Z
	13	N01D N11A
	21B	X06A X06B X06C
		X07A X07B
46.15.11↔		BORP KORP MBOR
		MKOR VAC VAC I

CHOP	MDC	DRG
		VAC II VBOR VKOR
	04	E36A E36B
	06	G02A G02B G12A G13A G13B G16A G16B G18A G18B G38A G38B G38C
	07	H33Z
	11	L10A L10B L33Z
	12	M37Z
	13	N01D N11A
	21B	X06A X06B X06C X07A X07B
46.15.12↔		BORP KORP MBOR MKOR VAC VAC I VAC II VBOR VKOR
	04	E36A E36B
	06	G02A G02B G12A G13A G13B G16A G16B G18A G18B G38A G38B G38C
	07	H33Z
	11	L10A L10B L33Z
	12	M37Z
	13	N01D N11A
	21B	X06A X06B X06C X07A X07B
46.19↔		BORP MBOR VAC VBOR
	04	E36A E36B
	06	G02A G02B G12A G16A G16B G18A G18B G38A G38B G38C
	13	N01D N11A
	21B	X06A X06B X06C
46.20↔		BORP MBOR VAC VAC I VAC II VBOR
	04	E36A E36B
	06	G02A G02B G12A G16A G16B G18A G18B G38A G38B G38C
	11	L10A L10B
	12	M37Z
	13	N01D N11A
	21B	X06A X06B X06C
46.25.11↔		BORP KORP MBOR MKOR VAC VAC I VAC II VBOR VKOR
	04	E36A E36B
	06	G02A G02B G12A G13A G13B G16A G16B G18A G18B G38A G38B G38C
	07	H33Z
	11	L10A L10B L33Z
	12	M37Z
	13	N01D N11A
	21B	X06A X06B X06C X07A X07B
46.25.12↔		BORP KORP MBOR MKOR VAC VAC I VAC II VBOR VKOR
	04	E36A E36B
	06	G02A G02B G12A G13A G13B G16A G16B G18A G18B G38A G38B G38C
	07	H33Z
	11	L10A L10B L33Z
	12	M37Z
	13	N01D N11A
	21B	X06A X06B X06C X07A X07B
46.26.11↔		BORP KORP MBOR MKOR VAC VAC I VAC II VBOR VKOR
	04	E36A E36B
	06	G02A G02B G12A G13A G13B G16A G16B G18A G18B G38A G38B G38C
	07	H33Z
	11	L10A L10B L33Z
	12	M37Z
	13	N01D N11A
	21B	X06A X06B X06C X07A X07B
46.26.12↔		BORP KORP MBOR MKOR VAC VAC I VAC II VBOR VKOR
	04	E36A E36B
	06	G02A G02B G12A G13A G13B G16A G16B G18A G18B G38A G38B G38C
	07	H33Z
	11	L10A L10B L33Z
	12	M37Z
	13	N01D N11A
	21B	X06A X06B X06C X07A X07B
46.29↔		BORP MBOR VAC VAC I VAC II VBOR
	04	E36A E36B
	06	G02A G02B G12A G13A G13B G16A G16B G18A G18B G38A G38B G38C
	07	H33Z
	11	L10A L10B L33Z
	12	M37Z
	13	N01D N11A
	21B	X06A X06B X06C X07A X07B
46.2A↔		BORP MBOR VAC VAC I VAC II VBOR
	04	E36A E36B
	06	G02A G02B G12A G16A G16B G18A G18B G38A G38B G38C
	07	H33Z
	10	K09A K09B
	11	L10A L10B L33Z
	12	M37Z
	13	N01D N11A
	21B	X06A X06B X06C X07A X07B
46.33↔		BORP MBOR VAC VAC I VAC II VBOR
	04	E36A E36B
	06	G02A G02B G12A G16A G16B G18A G18B G38A G38B G38C
	07	H33Z
	10	K09A K09B
	11	L10A L10B L33Z
	12	M37Z
	13	N11A N11B
	21B	X06A X06B X06C X07A X07B
46.39↔		BORP MBOR VAC VAC I VAC II VBOR
	04	E36A E36B
	06	G12A G16A G16B G18A G18B G38A G38B G38C
	07	H33Z
	10	K09A K09B
	11	L10A L10B L33Z
	12	M37Z
	13	N11A N11B
	21B	X06A X06B X06C X07A X07B
46.40↔		BORP MBOR VAC VBOR
	04	E36A E36B
	06	G12A G13A G13B G16A G38A G38B
	13	N11A N11B
	21B	X06A X06B X06C
46.41.00↔		BORP MBOR VAC VBOR
	04	E36A E36B
	06	G12A G13A G13B G16A G38A G38B
	13	N11A N11B
	21B	X06A X06B X06C
46.41.10↔		BORP MBOR VAC VBOR
	04	E36A E36B
	06	G12A G13A G13B G16A G38A G38B
	13	N11A N11B
	21B	X06A X06B X06C
46.41.11↔		BORP KORP MBOR MKOR VAC VAC I VAC II VBOR VKOR
	04	E36A E36B
	06	G12A G13A G13B G16A G38A G38B
	13	N01D N11A
	21B	X06A X06B X06C
46.41.12↔		BORP MBOR VAC VAC I VAC II VBOR
	04	E36A E36B
	06	G12A G13A G13B G16A G38A G38B
	13	N01D N11A
	21B	X06A X06B X06C
46.41.20↔		BORP MBOR VAC VAC I VAC II VBOR
	04	E36A E36B
	06	G12A G13A G13B G16A G38A G38B
	13	N01D N11A
	21B	X06A X06B X06C
46.41.99↔		BORP MBOR VAC VBOR
	04	E36A E36B
	06	G12A G13A G13B G16A G38A G38B
	13	N11A N11B
	21B	X06A X06B X06C
46.42.00↔		BORP MBOR VAC VAC I VAC II VBOR
	04	E36A E36B
	06	G12A G12B G16A

PROC

PROC

CHOP	MDC	DRG
		G38A G38B
	13	N11A N11B
	21B	X06A X06B X06C
46.42.09↔		BORP MBOR VAC
		VAC I VAC II VBOR
	04	E36A E36B
	06	G12A G12B G16A
		G38A G38B
	13	N11A N11B
	21B	X06A X06B X06C
46.42.11↔		BORP MBOR VAC
		VAC I VAC II VBOR
	04	E36A E36B
	06	G12A G12B G16A
		G38A G38B
	13	N11A N11B
	21B	X06A X06B X06C
46.42.12↔		BORP MBOR VAC
		VAC I VAC II VBOR
	04	E36A E36B
	06	G12A G12B G16A
		G38A G38B
	13	N11A N11B
	21B	X06A X06B X06C
46.42.21↔		BORP MBOR VAC
		VAC I VAC II VBOR
	04	E36A E36B
	06	G12A G12B G16A
		G38A G38B
	13	N11A N11B
	21B	X06A X06B X06C
46.42.22↔		BORP MBOR VAC
		VAC I VAC II VBOR
	04	E36A E36B
	06	G12A G12B G16A
		G38A G38B
	13	N11A N11B
	21B	X06A X06B X06C
46.43.00↔		BORP MBOR VAC
		VBOR
	04	E36A E36B
	05	F04Z F13A F13B
	06	G12A G13A G13B
		G16A G16B G18A
		G18B G38A G38B
		G38C
	10	K09A K09B
	13	N11A N11B
	21B	X06A X06B X06C
46.43.10↔		BORP MBOR VAC
		VBOR
	04	E36A E36B
	05	F04Z F13A F13B
	06	G02A G02B G12A
		G13A G13B G16A
		G16B G18A G18B
		G38A G38B G38C
	10	K09A K09B
	13	N11A N11B
	21B	X06A X06B X06C
46.43.11↔		BORP KORP MBOR
		MKOR VAC VAC I
		VAC II VBOR VKOR
	04	E36A E36B
	05	F04Z F13A F13B
	06	G02A G02B G12A
		G13A G13B G16A
		G16B G18A G18B
		G38A G38B G38C
	10	K09A K09B

CHOP	MDC	DRG
	13	N01D N11A
	21B	X06A X06B X06C
46.43.12↔		BORP MBOR VAC
		VAC I VAC II VBOR
	04	E36A E36B
	05	F04Z F13A F13B
	06	G02A G02B G12A
		G13A G13B G16A
		G16B G18A G18B
		G38A G38B G38C
	10	K09A K09B
	13	N01D N11A
	21B	X06A X06B X06C
46.43.20↔		BORP MBOR VAC
		VAC I VAC II VBOR
	04	E36A E36B
	05	F04Z F13A F13B
	06	G02A G02B G12A
		G13A G13B G16A
		G16B G18A G18B
		G38A G38B G38C
	10	K09A K09B
	13	N01D N11A
	21B	X06A X06B X06C
46.43.99↔		BORP MBOR VAC
		VBOR
	04	E36A E36B
	05	F04Z F13A F13B
	06	G12A G13A G13B
		G16A G16B G18A
		G18B G38A G38B
		G38C
	10	K09A K09B
	13	N11A N11B
	21B	X06A X06B X06C
46.51.00↔		BORP MBOR VAC
		VAC I VAC II VBOR
	04	E36A E36B
	05	F04Z F13A F13B
	06	G04A G04B G12A
		G16A G38A G38B
		G38C
	13	N11A N11B
	21B	X06A X06B
46.51.10↔		BORP MBOR VAC
		VAC I VAC II VBOR
	04	E36A E36B
	05	F04Z F13A F13B
	06	G02A G02B G04A
		G04B G12A G16A
		G38A G38B G38C
	13	N11A N11B
	21B	X06A X06B
46.51.20↔		BORP MBOR VAC
		VAC I VAC II VBOR
	04	E36A E36B
	05	F04Z F13A F13B
	06	G02A G02B G04A
		G04B G12A G16A
		G38A G38B G38C
	13	N11A N11B
	21B	X06A X06B
46.51.99↔		BORP MBOR VAC
		VAC I VAC II VBOR
	04	E36A E36B
	05	F04Z F13A F13B
	06	G04A G04B G12A
		G16A G38A G38B
		G38C
	13	N11A N11B

CHOP	MDC	DRG
	21B	X06A X06B
46.52.10↔		BORP MBOR VAC
		VAC I VAC II VBOR
	04	E36A E36B
	05	F04Z F13A F13B
	06	G02A G02B G04A
		G04B G12A G16A
		G16B G18A G18B
		G38A G38B G38C
	13	N11A N11B
	21B	X06A X06B
46.52.20↔		BORP MBOR VAC
		VAC I VAC II VBOR
	04	E36A E36B
	05	F04Z F13A F13B
	06	G02A G02B G04A
		G04B G12A G16A
		G16B G18A G18B
		G38A G38B G38C
	13	N11A N11B
	21B	X06A X06B
46.71↔		BORP MBOR VAC
		VAC I VAC II VBOR
	04	E36A E36B
	06	G12A G16A G16B
		G18A G18B G38A
		G38B G38C
	21B	X06A X06B
46.72.00‡↔	01	B60A
	04	E71B E75A E77A
	06	G46A G46B G46C
		G46D G72A G86C
46.72.10‡↔	01	B60A
	04	E71B E75A E77A
	06	G46A G46B G46C
		G46D G72A G86C
46.72.11↔		BORP MBOR VAC
		VAC I VAC II VBOR
	04	E36A E36B
	06	G12A G16A G16B
		G18A G18B G38A
		G38B G38C
	21B	X06A X06B
46.72.12↔		BORP MBOR VAC
		VAC I VAC II VBOR
	04	E36A E36B
	06	G12A G16A G16B
		G18A G18B G38A
		G38B G38C
	21B	X06A X06B
46.72.99‡↔	01	B60A
	04	E71B E75A E77A
	06	G46A G46B G46C
		G46D G72A G86C
46.73↔		BORP MBOR VAC
		VAC I VAC II VBOR
	04	E36A E36B
	06	G12A G16A G16B
		G18A G18B G38A
		G38B G38C
	21B	X06A X06B
46.74.00‡↔	01	B60A
	04	E71B E75A E77A
	06	G46A G46B G46C
		G72A G86C
46.74.10‡↔	01	B60A
	04	E71B E75A E77A
	06	G46A G46B G46C
		G72A G86C
46.74.11↔		BORP MBOR VAC

CHOP	MDC	DRG
		VAC I VAC II VBOR
	04	E36A E36B
	06	G12A G16A G16B G18A G18B G38A G38B G38C
	21B	X06A X06B
46.74.12↔		BORP MBOR VAC VAC I VAC II VBOR
	04	E36A E36B
	06	G12A G16A G16B G18A G18B G38A G38B G38C
	21B	X06A X06B
46.74.99‡↔	01	B60A
	04	E71B E75A E77A
	06	G46A G46B G46C G72A G86C
46.75↔		BORP MBOR VAC VAC I VAC II VBOR
	04	E36A E36B
	06	G12A G16A G16B G18A G18B G38A G38B G38C
	21B	X06A X06B
46.76.00‡↔	01	B60A
	04	E71B E75A E77A
	06	G46A G46B G46C G46D G72A
46.76.10‡↔	01	B60A
	04	E71B E75A E77A
	06	G46A G46B G46C G46D G72A
46.76.11↔		BORP MBOR VAC VAC I VAC II VBOR
	04	E36A E36B
	06	G12A G16A G16B G18A G18B G38A G38B G38C
	21B	X06A X06B
46.76.12↔		BORP MBOR VAC VAC I VAC II VBOR
	04	E36A E36B
	06	G12A G16A G16B G18A G18B G38A G38B G38C
	21B	X06A X06B
46.76.99‡↔	01	B60A
	04	E71B E75A E77A
	06	G46A G46B G46C G46D G72A
46.79.00‡↔	01	B60A
	04	E71B E75A E77A
	06	G46A G46B G46C G46D G72A
46.79.10↔	06	G13A G13B G16A G16B G18A G18B G38A G38B G38C
	21B	X06A X06B
46.79.20‡↔	01	B60A
	04	E71B E75A E77A
	06	G46A G46B G46C G46D G72A
46.79.21↔		BORP MBOR VAC VAC I VAC II VBOR
	04	E36A E36B
	06	G12A G13A G13B G16A G16B G18A G18B G38A G38B G38C
	21B	X06A X06B
46.79.22↔		BORP MBOR VAC VAC I VAC II VBOR
	04	E36A E36B
	06	G12A G13A G13B G16A G16B G18A G18B G38A G38B G38C
	21B	X06A X06B
46.79.30↔		BORP MBOR VAC VAC I VAC II VBOR
	04	E36A E36B
	06	G12A G13A G13B G16A G16B G18A G18B G38A G38B G38C
	21B	X06A X06B
46.79.31↔		BORP MBOR VAC VAC I VAC II VBOR
	04	E36A E36B
	06	G12A G13A G13B G16A G16B G18A G18B G38A G38B G38C
	21B	X06A X06B
46.79.32↔		BORP MBOR VAC VAC I VAC II VBOR
	04	E36A E36B
	06	G12A G13A G13B G16A G16B G18A G18B G38A G38B G38C
	21B	X06A X06B
46.79.39↔		BORP MBOR VAC VAC I VAC II VBOR
	04	E36A E36B
	06	G12A G13A G13B G16A G16B G18A G18B G38A G38B G38C
	21B	X06A X06B
46.79.40↔		BORP MBOR VAC VAC I VAC II VBOR
	04	E36A E36B
	06	G12A G13A G13B G16A G16B G18A G18B G38A G38B G38C
	21B	X06A X06B
46.79.41↔		BORP MBOR VAC VAC I VAC II VBOR
	04	E36A E36B
	06	G12A G13A G13B G16A G16B G18A G18B G38A G38B G38C
	21B	X06A X06B
46.79.50↔		BORP MBOR VAC VBOR
	04	E36A E36B
	06	G12A G13A G13B G16A G16B G18A G18B G38A G38B G38C
	21B	X06A X06B
46.79.51↔		BORP MBOR VAC VBOR
	04	E36A E36B
	06	G12A G13A G13B G16A G16B G18A G18B G38A G38B G38C
	21B	X06A X06B
46.85.10‡↔	01	B60A
	04	E71B E75A E77A
	06	G46A G46B G46C G46D G72A
46.85.11↔	06	G04A G04B G38A G38B G38C
	21B	X06A X06B
46.85.12↔	06	G04A G04B G38A G38B G38C
	21B	X06A X06B
46.85.20‡↔	01	B60A
	04	E71B E75A E77A
	06	G46A G46B G46C G46D G72A
46.85.21↔	06	G04A G04B G38A G38B G38C
	21B	X06A X06B
46.85.22↔	06	G04A G04B G38A G38B G38C
	21B	X06A X06B
46.85.30‡↔	01	B60A
	04	E71B E75A E77A
	06	G46A G46B G46C G46D G72A
46.85.31↔	06	G04A G04B G38A G38B G38C
	21B	X06A X06B
46.85.32↔	06	G04A G04B G38A G38B G38C
	21B	X06A X06B
46.85.99‡↔	01	B60A
	04	E71B E75A E77A
	06	G46A G46B G46C G46D G72A
46.91↔		BORP MBOR VAC VAC I VAC II VBOR
	04	E36A E36B
	06	G04A G04B G12A G16A G38A G38B G38C
	21B	X06A X06B
46.92↔		BORP MBOR VAC VAC I VAC II VBOR
	04	E36A E36B
	06	G04A G04B G12A G16A G38A G38B G38C
	21B	X06A X06B
46.97.00↔		BORP KORP MBOR MKOR VAC VAC I VAC II VBOR VKOR
	04	E36A E36B
	06	G12A G16A G16B G18A G18B G38A G38B G38C
	07	H06Z
	10	K09A K09B
	21B	X06A X06B
	Prä	A02Z A06A A06B A06C A07A
46.97.10↔		BORP KORP MBOR MKOR VAC VAC I VAC II VBOR VKOR
	04	E36A E36B
	06	G12A G16A G16B G18A G18B G38A G38B G38C
	07	H06Z

PROC

PROC

CHOP	MDC	DRG
	10	K09A K09B
	21B	X06A X06B
	Prä	A02Z A06A A06B A06C A07A
46.97.99↔		BORP KORP MBOR MKOR VAC VAC I VAC II VBOR VKOR
	04	E36A E36B
	06	G12A G16A G38A G38B
	Prä	A02Z A06A A06B A06C A07A
46.99.00‡↔	01	B60A
	04	E71B E75A E77A
	06	G46A G46B G46C G46D G72A
46.99.10↔	06	G04A G04B G12A G12B G38A G38B G38C
	07	H06Z H33Z
	13	N11A N11B
	21B	X06A X06B X07A X07B
46.99.20‡↔	01	B60A
	04	E71B E75A E77A
	06	G46A G46B G46C G46D G72A G86C
46.99.30‡↔	01	B60A
	04	E71B E75A E77A
	06	G46A G46B G46C G46D G72A G86C
46.99.50‡↔	01	B60A
	04	E71B E75A E77A
	06	G46A G46B G46C G72A
46.99.51↔	06	G04A G04B G12A G12B G38A G38B G38C
	07	H06Z H33Z
	13	N11A N11B
	21B	X06A X06B X07A X07B
46.99.52↔	06	G04A G04B G12A G12B G38A G38B G38C
	07	H06Z H33Z
	13	N11A N11B
	21B	X06A X06B X07A X07B
46.99.60‡↔	01	B60A
	04	E71B E75A E77A
	06	G46A G46B G46C G72A
	07	H61A H64A
46.99.61↔	06	G04A G04B G12A G12B G38A G38B G38C
	07	H06Z H33Z
	13	N11A N11B
	21B	X06A X06B X07A X07B
46.99.62↔	06	G04A G04B G12A G12B G38A G38B G38C
	07	H06Z H33Z
	13	N11A N11B
	21B	X06A X06B X07A X07B
46.99.63‡↔	01	B60A
	04	E71B E75A E77A
	06	G46A G46B G46C G72A G86C
46.99.70‡↔	01	B60A
	04	E71B E75A E77A
	06	G46A G46B G46C G46D G72A
46.99.71↔	06	G04A G04B G12A G12B G38A G38B G38C
	07	H06Z H33Z
	13	N11A N11B
	21B	X06A X06B X07A X07B
46.99.72↔	06	G04A G04B G12A G12B G38A G38B G38C
	07	H06Z H33Z
	13	N11A N11B
	21B	X06A X06B X07A X07B
46.99.81↔	06	G04A G04B G12A G12B G38A G38B G38C
	07	H06Z H33Z
	13	N11A N11B
	21B	X06A X06B X07A X07B
46.99.82↔	06	G04A G04B G12A G12B G38A G38B G38C
	07	H06Z H33Z
	13	N11A N11B
	21B	X06A X06B X07A X07B
46.99.93↔	06	G04A G04B G12A G12B G38A G38B G38C
	07	H06Z H33Z
	13	N11A N11B
	21B	X06A X06B X07A X07B
46.99.94↔	06	G04A G04B G12A G12B G38A G38B G38C
	07	H06Z H33Z
	13	N11A N11B
	21B	X06A X06B X07A X07B
47.00↔		BORP MBOR VAC VBOR
	04	E36A E36B
	06	G12A G16A G22A G22B G22C G22D G22E G38A G38B
	13	N11A N11B
47.01↔		BORP MBOR VAC VAC I VAC II VBOR
	04	E36A E36B
	06	G12A G16A G22A G22B G22C G22D G22E G38A G38B
	13	N08Z
47.02↔		BORP MBOR VAC VBOR
	04	E36A E36B
	06	G12A G16A G22A G22B G22C G22D G22E G38A G38B
	13	N11A N11B
47.09↔		BORP MBOR VAC VBOR
	04	E36A E36B
	06	G12A G16A G22A G22B G22C G22D G22E G38A G38B
	13	N11A N11B
47.10↔	06	G09C G22A G22B G22C G22D G22E
	13	N11A N11B
47.11↔	06	G09C G22A G22B G22C G22D G22E
	13	N08Z N11A N11B
47.12↔	06	G09C G22A G22B G22C G22D G22E
	13	N11A N11B
47.19↔	06	G09C G22A G22B G22C G22D G22E
	13	N11A N11B
47.2↔		BORP MBOR VAC VBOR
	04	E36A E36B
	06	G12A G16A G22A G22B G22C G22D G22E G38A G38B
	13	N11A N11B
47.9↔		BORP MBOR VAC VBOR
	04	E36A E36B
	06	G12A G16A G22A G22B G22C G22D G22E G38A G38B
	13	N11A N11B
48.0↔		BORP MBOR VAC VBOR
	04	E36A E36B
	06	G04A G04B G12A G16A G38A G38B G38C
	21B	X06A X06B X06C
48.1↔		BORP MBOR VAC VBOR
	04	E36A E36B
	06	G02A G02B G12A G16A G16B G18A G18B G33Z G38A G38B G38C
	07	H33Z
	11	L33Z
	21B	X06A X06B X06C X07A X07B
48.21↔		BORP MBOR VAC VAC I VAC II VBOR
	04	E36A E36B
	06	G04A G04B G12A G16A G38A G38B G38C
	21B	X06A X06B X06C
48.22‡↔	01	B60A
	04	E71B E75A E77A
	06	G46A G46B G46C G46D G72A G86C
	07	H61A
48.24‡↔		AKBB
	01	B60A
	04	E71B E75A E77A
	06	G46A G46B G46C G46D G72A G86C
	07	H61A
	16	Q86A
48.25↔		BORP MBOR VAC

CHOP	MDC	DRG
		VAC I VAC II VBOR
	04	E36A E36B
	06	G04A G04B G12A G16A G38A G38B G38C
48.26‡↔		AKBB
	01	B60A
	04	E71B E75A E77A
	06	G46A G46B G46C G46D G72A G86C
	07	H61A
	16	Q86A
48.31‡↔	01	B60A
	04	E71B E75A E77A
	06	G46A G46B G46C G46D G72A
48.32‡↔	01	B60A
	04	E71B E75A E77A
	06	G46A G46B G46C G46D G72A
48.33‡↔	01	B60A
	04	E71B E75A E77A
	06	G46A G46B G46C G46D G72A
48.34‡↔	01	B60A
	04	E71B E75A E77A
	06	G46A G46B G46C G46D G72A
48.35.10‡↔	01	B60A
	06	G46A G46B G46C G46D G86C
48.35.11‡↔	01	B60A
	06	G46A G46B G46C G46D G86C
48.41↔		BORP KORP MBOR MKOR VAC VAC I VAC II VBOR VKOR
	04	E36A E36B
	06	G12A G16A G16B G17A G17B G17C G33Z G38A G38B G38C
	07	H33Z
	11	L10A L10B L33Z
	12	M01Z M37Z
	13	N01A N01B N01C N01D N33Z N34Z
	21B	X06A X06B X06C X07A X07B
48.49↔		BORP KORP MBOR MKOR VAC VAC I VAC II VBOR VKOR
	04	E36A E36B
	06	G12A G16A G16B G17A G17B G17C G33Z G38A G38B G38C
	07	H33Z
	11	L10A L10B L33Z
	12	M01Z M37Z
	13	N01A N01B N01C N01D N33Z N34Z
	21B	X06A X06B X06C X07A X07B
48.50↔		BORP MBOR MVE VAC VAC I VAC II VBOR
	04	E36A E36B
	06	G12A G16A G16B G17A G17B G17C G33Z G38A G38B G38C
	07	H33Z
	11	L10A L10B L33Z
	12	M01Z M37Z
	13	N01A N01B N01C N01D N33Z N34Z
	21B	X06A X06B X06C X07A X07B
48.51↔		BORP KORP MBOR MKOR MVE VAC VAC I VAC II VBOR VKOR
	04	E36A E36B
	06	G12A G16A G16B G33Z G38A G38B G38C
	07	H33Z
	11	L10A L10B L33Z
	12	M01Z M37Z
	13	N01A N01B N01C N01D N33Z N34Z
	21B	X06A X06B X06C X07A X07B
48.53↔		BORP KORP MBOR MKOR MVE VAC VAC I VAC II VBOR VKOR
	04	E36A E36B
	06	G12A G16A G16B G33Z G38A G38B G38C
	07	H33Z
	11	L10A L10B L33Z
	12	M01Z M37Z
	13	N01A N01B N01C N01D N33Z N34Z
	21B	X06A X06B X06C X07A X07B
48.59↔		BORP MBOR MVE VAC VAC I VAC II VBOR
	04	E36A E36B
	06	G12A G16A G16B G17A G17B G17C G33Z G38A G38B G38C
	07	H33Z
	11	L10A L10B L33Z
	12	M01Z M37Z
	13	N01A N01B N01C N01D N33Z N34Z
	21B	X06A X06B X06C X07A X07B
48.65↔		BORP KORP MBOR MKOR MVE VAC VAC I VAC II VBOR VKOR
	04	E36A E36B
	06	G12A G16A G16B G17A G17B G17C G33Z G38A G38B G38C
	07	H33Z
	11	L10A L10B L33Z
	12	M37Z
	13	N01A N01B N01C N01D N33Z N34Z
	21B	X06A X06B X06C X07A X07B
48.66.00↔		BORP MBOR MVE VAC VAC I VAC II VBOR
	04	E36A E36B
	06	G12A G16A G16B G17A G17B G17C G33Z G38A G38B G38C
	07	H33Z
	11	L10A L10B L33Z
	12	M01Z M37Z
	13	N01A N01B N01C N01D N33Z N34Z
	21B	X06A X06B X06C X07A X07B
48.66.09↔		BORP MBOR MVE VAC VAC I VAC II VBOR
	04	E36A E36B
	06	G12A G16A G16B G17A G17B G17C G33Z G38A G38B G38C
	07	H33Z
	11	L10A L10B L33Z
	12	M01Z M37Z
	13	N01A N01B N01C N01D N33Z N34Z
	21B	X06A X06B X06C X07A X07B
48.66.11↔		BORP KORP MBOR MKOR MVE VAC VAC I VAC II VBOR VKOR
	04	E36A E36B
	06	G12A G16A G16B G17A G17B G17C G33Z G38A G38B G38C
	07	H33Z
	11	L10A L10B L33Z
	12	M01Z M37Z
	13	N01A N01B N01C N01D N33Z N34Z
	21B	X06A X06B X06C X07A X07B
48.66.12↔		BORP KORP MBOR MKOR MVE VAC VAC I VAC II VBOR VKOR
	04	E36A E36B
	06	G12A G16A G16B G17A G17B G17C G33Z G38A G38B G38C
	07	H33Z
	11	L10A L10B L33Z
	12	M01Z M37Z
	13	N01A N01B N01C N01D N33Z N34Z
	21B	X06A X06B X06C X07A X07B
48.66.13↔		BORP KORP MBOR MKOR MVE VAC VAC I VAC II VBOR VKOR
	04	E36A E36B
	06	G12A G16A G16B G17A G17B G17C G33Z G38A G38B

PROC

PROC

CHOP	MDC	DRG
		G38C
	07	H33Z
	11	L10A L10B L33Z
	12	M01Z M37Z
	13	N01A N01B N01C
		N01D N33Z N34Z
	21B	X06A X06B X06C
		X07A X07B
48.66.14↔		BORP KORP MBOR
		MKOR MVE VAC
		VAC I VAC II VBOR
		VKOR
	04	E36A E36B
	06	G12A G16A G16B
		G17A G17B G17C
		G33Z G38A G38B
		G38C
	07	H33Z
	11	L10A L10B L33Z
	12	M01Z M37Z
	13	N01A N01B N01C
		N01D N33Z N34Z
	21B	X06A X06B X06C
		X07A X07B
48.66.15↔		BORP KORP MBOR
		MKOR MVE VAC
		VAC I VAC II VBOR
		VKOR
	04	E36A E36B
	06	G12A G16A G16B
		G17A G17B G17C
		G33Z G38A G38B
		G38C
	07	H33Z
	11	L10A L10B L33Z
	12	M01Z M37Z
	13	N01A N01B N01C
		N01D N33Z N34Z
	21B	X06A X06B X06C
		X07A X07B
48.66.21↔		BORP KORP MBOR
		MKOR MVE VAC
		VAC I VAC II VBOR
		VKOR
	04	E36A E36B
	06	G12A G16A G16B
		G17A G17B G17C
		G33Z G38A G38B
		G38C
	07	H33Z
	11	L10A L10B L33Z
	12	M01Z M37Z
	13	N01A N01B N01C
		N01D N33Z N34Z
	21B	X06A X06B X06C
		X07A X07B
48.66.22↔		BORP KORP MBOR
		MKOR MVE VAC
		VAC I VAC II VBOR
		VKOR
	04	E36A E36B
	06	G12A G16A G16B
		G33Z G38A G38B
		G38C
	07	H33Z
	11	L10A L10B L33Z
	12	M01Z M37Z
	13	N01A N01B N01C
		N01D N33Z N34Z
	21B	X06A X06B X06C
		X07A X07B
48.66.23↔		BORP KORP MBOR
		MKOR MVE VAC
		VAC I VAC II VBOR
		VKOR
	04	E36A E36B
	06	G12A G16A G16B
		G17A G17B G17C
		G33Z G38A G38B
		G38C
	07	H33Z
	11	L10A L10B L33Z
	12	M01Z M37Z
	13	N01A N01B N01C
		N01D N33Z N34Z
	21B	X06A X06B X06C
		X07A X07B
48.66.24↔		BORP KORP MBOR
		MKOR MVE VAC
		VAC I VAC II VBOR
		VKOR
	04	E36A E36B
	06	G12A G16A G16B
		G33Z G38A G38B
		G38C
	07	H33Z
	11	L10A L10B L33Z
	12	M01Z M37Z
	13	N01A N01B N01C
		N01D N33Z N34Z
	21B	X06A X06B X06C
		X07A X07B
48.66.25↔		BORP KORP MBOR
		MKOR MVE VAC
		VAC I VAC II VBOR
		VKOR
	04	E36A E36B
	06	G12A G16A G16B
		G17A G17B G17C
		G33Z G38A G38B
		G38C
	07	H33Z
	11	L10A L10B L33Z
	12	M01Z M37Z
	13	N01A N01B N01C
		N01D N33Z N34Z
	21B	X06A X06B X06C
		X07A X07B
48.66.31↔		BORP KORP MBOR
		MKOR MVE VAC
		VAC I VAC II VBOR
		VKOR
	04	E36A E36B
	06	G12A G16A G16B
		G17A G17B G17C
		G33Z G38A G38B
		G38C
	07	H33Z
	11	L10A L10B L33Z
	12	M01Z M37Z
	13	N01A N01B N01C
		N01D N33Z N34Z
	21B	X06A X06B X06C
		X07A X07B
48.66.32↔		BORP KORP MBOR
		MKOR MVE VAC
		VAC I VAC II VBOR
		VKOR
	04	E36A E36B
	06	G12A G16A G16B
		G33Z G38A G38B
		G38C
	07	H33Z
	11	L10A L10B L33Z
	12	M01Z M37Z
	13	N01A N01B N01C
		N01D N33Z N34Z
	21B	X06A X06B X06C
		X07A X07B
48.66.33↔		BORP KORP MBOR
		MKOR MVE VAC
		VAC I VAC II VBOR
		VKOR
	04	E36A E36B
	06	G12A G16A G16B
		G17A G17B G17C
		G33Z G38A G38B
		G38C
	07	H33Z
	11	L10A L10B L33Z
	12	M01Z M37Z
	13	N01A N01B N01C
		N01D N33Z N34Z
	21B	X06A X06B X06C
		X07A X07B
48.66.34↔		BORP KORP MBOR
		MKOR MVE VAC
		VAC I VAC II VBOR
		VKOR
	04	E36A E36B
	06	G12A G16A G16B
		G33Z G38A G38B
		G38C
	07	H33Z
	11	L10A L10B L33Z
	12	M01Z M37Z
	13	N01A N01B N01C
		N01D N33Z N34Z
	21B	X06A X06B X06C
		X07A X07B
48.66.35↔		BORP KORP MBOR
		MKOR MVE VAC
		VAC I VAC II VBOR
		VKOR
	04	E36A E36B
	06	G12A G16A G16B
		G17A G17B G17C
		G33Z G38A G38B
		G38C
	07	H33Z
	11	L10A L10B L33Z
	12	M01Z M37Z
	13	N01A N01B N01C
		N01D N33Z N34Z
	21B	X06A X06B X06C
		X07A X07B
48.69↔		BORP MBOR MVE
		VAC VAC I VAC II
		VBOR
	04	E36A E36B
	06	G12A G16A G16B
		G17A G17B G17C
		G33Z G38A G38B
		G38C
	07	H33Z
	11	L10A L10B L33Z
	12	M01Z M37Z
	13	N01A N01B N01C
		N01D N33Z N34Z
	21B	X06A X06B X06C

CHOP	MDC	DRG
		X07A X07B
48.71↔		BORP MBOR VAC
		VAC I VAC II VBOR
	04	E36A E36B
	06	G12A G16A G16B
		G18A G18B G38A
		G38B G38C
	13	N04C N06A N06B
		N06C
	21B	X06A X06B
48.72↔		BORP MBOR VAC
		VAC I VAC II VBOR
	04	E36A E36B
	06	G12A G16A G16B
		G18A G18B G38A
		G38B G38C
	21B	X06A X06B
48.73↔		BORP MBOR VAC
		VAC I VAC II VBOR
	04	E36A E36B
	06	G12A G12B G16A
		G38A G38B
	21B	X06A X06B
48.74↔	06	G02A G02B G12A
		G12B G33Z G38A
		G38B G38C
	07	H33Z
	11	L33Z
	13	N08Z
	21B	X06A X06B X06C
		X07A X07B
48.75.00↔		BORP MBOR VAC
		VAC I VAC II VBOR
	04	E36A E36B
	06	G12A G16A G16B
		G18A G18B G38A
		G38B G38C
	13	N04C N06A N06B
		N06C
	21B	X06A X06B
48.75.09↔		BORP MBOR VAC
		VAC I VAC II VBOR
	04	E36A E36B
	06	G12A G16A G16B
		G18A G18B G38A
		G38B G38C
	13	N04C N06A N06B
	21B	X06A X06B
48.75.11↔		BORP MBOR VAC
		VAC I VAC II VBOR
	04	E36A E36B
	06	G12A G16A G16B
		G18A G18B G38A
		G38B G38C
	13	N04C N06A N06B
	21B	X06A X06B
48.75.21↔		BORP MBOR VAC
		VAC I VAC II VBOR
	04	E36A E36B
	06	G12A G16A G16B
		G18A G18B G38A
		G38B G38C
	13	N04C N06A N06B
	21B	X06A X06B
48.76.00↔		BORP MBOR VAC
		VAC I VAC II VBOR
	04	E36A E36B
	06	G12A G12B G16A
		G38A G38B
	13	N04C N06A N06B
		N06C
	21B	X06A X06B
48.76.10↔		BORP MBOR VAC
		VAC I VAC II VBOR
	04	E36A E36B
	06	G12A G12B G16A
		G38A G38B
	13	N04C N06A N06B
		N06C
	21B	X06A X06B
48.76.11↔		BORP MBOR VAC
		VAC I VAC II VBOR
	04	E36A E36B
	06	G12A G12B G16A
		G38A G38B
	13	N04C N06A N06B
		N06C
	21B	X06A X06B
48.76.99↔		BORP MBOR VAC
		VAC I VAC II VBOR
	04	E36A E36B
	06	G12A G12B G16A
		G38A G38B
	13	N04C N06A N06B
		N06C
	21B	X06A X06B
48.81↔	06	G26A G26B
	09	J02A J02B J03A
		J03B J04Z J09A
		J09B
	21B	X06A X06B X06C
48.82↔	06	G26A G26B
	09	J02A J02B J03A
		J03B J04Z J09A
		J09B
	13	N04A N04B N07A
		N33Z
	14	O02A O02B
	21B	X06A X06B X06C
48.92↔		BORP MBOR VAC
		VBOR
	04	E36A E36B
	06	G11A G11B G12A
		G16A G38A G38B
48.93↔		BORP MBOR VAC
		VAC I VAC II VBOR
	04	E36A E36B
	06	G12A G13A G13B
		G16A G38A G38B
	09	J02A J02B J03A
		J03B J04Z J11A
		J11B
	13	N04C N06A N06B
		N06C
	14	O02A O02B
	21B	X06A X06B
49.01‡↔	01	B60A
	06	G46A G46B G46C
		G46D G86C
49.02‡↔	01	B60A
	06	G46A G46B G46C
		G46D G86C
49.03‡↔	01	B60A
	06	G46A G46B G46C
		G46D G86C
49.04‡↔	01	B60A
	06	G46A G46B G46C
		G46D G86C
49.11↔	06	G26A G26B
	09	J02A J02B J03A
		J03B J04Z J09A
		J09B
	21B	X06A X06B X06C
49.12↔	06	G26A G26B
	09	J02A J02B J03A
		J03B J04Z J11A
		J11B
	21B	X06A X06B X06C
49.22‡↔		AKBB
	01	B60A
	04	E71B E75A E77A
	06	G46A G46B G46C
		G46D G72A G86C
	07	H61A
	16	Q86A
49.23‡↔		AKBB
	01	B60A
	04	E71B E75A E77A
	06	G46A G46B G46C
		G46D G72A G86C
	07	H61A
	16	Q86A
49.31‡↔	01	B60A
	06	G46A G46B G46C
		G46D G86C
49.39‡↔	01	B60A
	06	G86C
49.43↔	06	G26A G26B
	14	O02A O02B
49.44↔	06	G26A G26B
	14	O02A O02B
49.45↔	06	G26A G26B
	14	O02A O02B
49.46.00↔	06	G26A G26B
49.46.10↔	06	G26A G26B
	14	O02A O02B
49.46.11↔	06	G26A G26B
	14	O02A O02B
49.46.12↔	06	G26A G26B
	14	O02A O02B
49.46.99↔	06	G26A G26B
	14	O02A O02B
49.51↔		BORP MBOR VAC
		VAC I VAC II VBOR
	04	E36A E36B
	06	G12A G16A G26A
		G26B G38A G38B
49.52↔		BORP MBOR VAC
		VAC I VAC II VBOR
	04	E36A E36B
	06	G12A G16A G26A
		G26B G38A G38B
49.59↔		BORP MBOR VAC
		VAC I VAC II VBOR
	04	E36A E36B
	06	G12A G16A G26A
		G26B G38A G38B
49.6↔	06	G26A G26B
	09	J02A J02B J03A
		J03B J04Z J11A
		J11B
	14	O02A O02B
	21B	X06A X06B X06C
49.70↔	06	G11A G11B
	09	J02A J02B J03A
		J03B J04Z J11A
		J11B
	21B	X06A X06B X06C
49.71↔	06	G11A G11B
	09	J02A J02B J03A

PROC

PROC

CHOP	MDC	DRG
		J03B J04Z J11A
		J11B
	21B	X06A X06B X06C
49.72↔	06	G11A G11B
	09	J02A J02B J03A
		J03B J04Z J11A
		J11B
49.73.00↔	06	G26A G26B
	09	J02A J02B J03A
		J03B J04Z J11A
		J11B
	21B	X06A X06B X06C
49.73.11↔	06	G26A
	09	J02A J02B J03A
		J03B J04Z J11A
		J11B
	21B	X06A X06B X06C
49.73.12↔	06	G26A
	09	J02A J02B J03A
		J03B J04Z J11A
		J11B
	21B	X06A X06B X06C
49.73.99↔	06	G26A
	09	J02A J02B J03A
		J03B J04Z J11A
		J11B
	21B	X06A X06B X06C
49.74↔		BORP KORP MBOR
		MKOR VAC VAC I
		VAC II VBOR VKOR
	04	E36A E36B
	06	G02A G02B G12A
		G16A G16B G33Z
		G38A G38B G38C
	07	H33Z
	11	L33Z
	21B	X07A X07B
49.75↔		BORP MBOR VAC
		VAC I VAC II VBOR
	04	E36A E36B
	06	G11A G11B G12A
		G16A G38A G38B
49.76↔		BORP MBOR VAC
		VAC I VAC II VBOR
	04	E36A E36B
	06	G11A G11B G12A
		G16A G38A G38B
49.77.11↔		BORP MBOR VAC
		VAC I VAC II VBOR
	04	E36A E36B
	06	G02A G02B G11A
		G11B G12A G16A
		G38A G38B G38C
	09	J02A J02B J03A
		J03B J04Z J09A
		J09B
	13	N04C N06A N06B
		N06C
	14	O02A O02B
	21B	X06A X06B X06C
49.77.12↔		BORP MBOR VAC
		VAC I VAC II VBOR
	04	E36A E36B
	06	G02A G02B G11A
		G11B G12A G16A
		G38A G38B G38C
	09	J02A J02B J03A
		J03B J04Z J09A
		J09B
	13	N04C N06A N06B

CHOP	MDC	DRG
		N06C
	14	O02A O02B
	21B	X06A X06B X06C
49.77.13↔		BORP MBOR VAC
		VAC I VAC II VBOR
	04	E36A E36B
	06	G02A G02B G11A
		G11B G12A G16A
		G38A G38B G38C
	09	J02A J02B J03A
		J03B J04Z J09A
		J09B
	13	N04C N06A N06B
		N06C
	14	O02A O02B
	21B	X06A X06B X06C
49.78.00↔		BORP MBOR VAC
		VAC I VAC II VBOR
	04	E36A E36B
	06	G02A G02B G11A
		G11B G12A G16A
		G38A G38B G38C
	09	J02A J02B J03A
		J03B J04Z J09A
		J09B
	13	N04C N06A N06B
		N06C
	14	O02A O02B
	21B	X06A X06B X06C
49.78.09↔		BORP MBOR VAC
		VAC I VAC II VBOR
	04	E36A E36B
	06	G02A G02B G11A
		G11B G12A G16A
		G38A G38B G38C
	09	J02A J02B J03A
		J03B J04Z J09A
		J09B
	13	N04C N06A N06B
		N06C
	14	O02A O02B
	21B	X06A X06B X06C
49.78.11↔		BORP MBOR VAC
		VAC I VAC II VBOR
	04	E36A E36B
	06	G02A G02B G11A
		G11B G12A G16A
		G38A G38B G38C
	09	J02A J02B J03A
		J03B J04Z J09A
		J09B
	13	N04C N06A N06B
		N06C
	14	O02A O02B
	21B	X06A X06B X06C
49.78.12↔		BORP MBOR VAC
		VAC I VAC II VBOR
	04	E36A E36B
	06	G02A G02B G11A
		G11B G12A G16A
		G38A G38B G38C
	09	J02A J02B J03A
		J03B J04Z J09A
		J09B
	13	N04C N06A N06B
		N06C
	14	O02A O02B
	21B	X06A X06B X06C
49.78.13↔		BORP MBOR VAC
		VAC I VAC II VBOR
	04	E36A E36B

CHOP	MDC	DRG
	06	G02A G02B G11A
		G11B G12A G16A
		G38A G38B G38C
	09	J02A J02B J03A
		J03B J04Z J09A
		J09B
	13	N04C N06A N06B
		N06C
	14	O02A O02B
	21B	X06A X06B X06C
49.78.14↔		BORP MBOR VAC
		VAC I VAC II VBOR
	04	E36A E36B
	06	G02A G02B G11A
		G11B G12A G16A
		G38A G38B G38C
	09	J02A J02B J03A
		J03B J04Z J09A
		J09B
	13	N04C N06A N06B
		N06C
	14	O02A O02B
	21B	X06A X06B X06C
49.78.21↔		BORP MBOR VAC
		VAC I VAC II VBOR
	04	E36A E36B
	06	G02A G02B G11A
		G11B G12A G16A
		G38A G38B G38C
	09	J02A J02B J03A
		J03B J04Z J09A
		J09B
	13	N04C N06A N06B
		N06C
	14	O02A O02B
	21B	X06A X06B X06C
49.78.31↔		BORP MBOR VAC
		VAC I VAC II VBOR
	04	E36A E36B
	06	G02A G02B G11A
		G11B G12A G16A
		G38A G38B G38C
	09	J02A J02B J03A
		J03B J04Z J09A
		J09B
	13	N04C N06A N06B
		N06C
	14	O02A O02B
	21B	X06A X06B X06C
49.79↔		BORP MBOR VAC
		VBOR
	04	E36A E36B
	06	G11A G11B G12A
		G16A G38A G38B
	09	J02A J02B J03A
		J03B J04Z J09A
		J09B
	13	N04C N06A N06B
		N06C
	14	O02A O02B
	21B	X06A X06B X06C
50.0↔		BORP MBOR VAC
		VAC I VAC II VBOR
	04	E36A E36B
	06	G12A G16A G33Z
		G38A G38B G38C
	07	H01A H01B H01C
		H09A H09B H09C
		H33Z
	11	L33Z

CHOP	MDC	DRG
	21B	X06A X06B X06C
50.11.09‡↔		AKBB
	01	B60A
	04	E71B E75A E77A
	06	G46A G46B G46C
		G46D G72A G86C
	16	Q86A
50.11.11‡↔		AKBB
	01	B60A
	04	E71B E75A E77A
	06	G46A G46B G46C
		G46D G72A G86C
	16	Q86A
50.11.12‡↔		AKBB
	01	B60A
	04	E71B E75A E77A
	06	G46A G46B G46C
		G46D G72A G86C
	16	Q86A
50.12.00↔		BORP MBOR VAC
		VAC I VAC II VBOR
	04	E02A E02B E02C
		E36A E36B
	06	G12A G12B G16A
		G38A G38B
	07	H12A H12B
	08	I28A I28B
	09	J02A J02B J03A
		J03B J04Z J11A
		J11B
	10	K09A K09B
	11	L09A L09B
	12	M06Z M09A M09B
		M37Z
	13	N11A N11B
	21B	X06A X06B X06C
50.12.09↔		BORP MBOR VAC
		VAC I VAC II VBOR
	04	E02A E02B E02C
		E36A E36B
	06	G12A G12B G16A
		G38A G38B
	07	H12A H12B
	08	I28A I28B
	09	J02A J02B J03A
		J03B J04Z J11A
		J11B
	10	K09A K09B
	11	L09A L09B
	12	M06Z M09A M09B
		M37Z
	13	N11A N11B
	21B	X06A X06B X06C
50.12.11↔		BORP MBOR VAC
		VAC I VAC II VBOR
	04	E02A E02B E02C
		E36A E36B
	06	G12A G12B G16A
		G38A G38B
	07	H12A H12B
	08	I28A I28B
	09	J02A J02B J03A
		J03B J04Z J11A
		J11B
	10	K09A K09B
	11	L09A L09B
	12	M06Z M09A M09B
		M37Z
	13	N11A N11B
	21B	X06A X06B X06C

CHOP	MDC	DRG
50.12.12↔		BORP MBOR VAC
		VAC I VAC II VBOR
	04	E02A E02B E02C
		E36A E36B
	06	G12A G12B G16A
		G38A G38B
	07	H12A H12B
	08	I28A I28B
	09	J02A J02B J03A
		J03B J04Z J11A
		J11B
	10	K09A K09B
	11	L09A L09B
	12	M06Z M09A M09B
		M37Z
	13	N11A N11B
	21B	X06A X06B X06C
50.13.10‡↔		AKBB
	01	B60A
	04	E71B E75A E77A
	07	H41A H41B H41C
		H41D H86A
	16	Q86A
50.13.99‡↔		AKBB
	01	B60A
	04	E71B E75A E77A
	07	H41A H41B H41C
		H41D H86A
	16	Q86A
50.14↔	04	E02A E02B E02C
	05	F21A F21B F21C
	06	G12A G12B
	07	H12A H12B
	08	I28A I28B
	09	J02A J02B J03A
		J03B J04Z J11A
		J11B
	10	K09A K09B
	11	L09A L09B
	13	N11A N11B
	14	O02A O02B
	21B	X06A X06B X06C
	22	Y02A Y02B Y02C
50.20‡↔	01	B60A
	04	E71B E75A E77A
	07	H41A H41B H41C
		H41D H86A
50.21.11↔		BORP MBOR VAC
		VAC I VAC II VBOR
	04	E36A E36B
	06	G10Z G12A G16A
		G33Z G38A G38B
		G38C
	07	H01A H01B H01C
		H09A H09B H09C
		H33Z
	09	J01A J01B
	11	L33Z
	21B	X07A X07B
50.21.12↔		BORP MBOR VAC
		VAC I VAC II VBOR
	04	E36A E36B
	06	G10Z G12A G16A
		G33Z G38A G38B
		G38C
	07	H01A H01B H01C
		H09A H09B H09C
		H33Z
	09	J01A J01B
	11	L33Z

CHOP	MDC	DRG
	21B	X07A X07B
50.23.11↔		BORP MBOR VAC
		VAC I VAC II VBOR
	04	E36A E36B
	06	G10Z G12A G16A
		G16B G18A G33Z
		G38A G38B G38C
	07	H01A H01B H01C
		H09A H09B H09C
		H33Z
	09	J01A J01B
	11	L33Z
	21B	X07A X07B
50.23.12↔		BORP MBOR VAC
		VAC I VAC II VBOR
	04	E36A E36B
	06	G10Z G12A G16A
		G16B G18A G33Z
		G38A G38B G38C
	07	H01A H01B H01C
		H09A H09B H09C
		H33Z
	09	J01A J01B
	11	L33Z
	21B	X07A X07B
50.23.13↔		BORP MBOR VAC
		VAC I VAC II VBOR
	04	E36A E36B
	06	G10Z G12A G16A
		G16B G18A G33Z
		G38A G38B G38C
	07	H01A H01B H01C
		H09A H09B H09C
		H33Z
	09	J01A J01B
	11	L33Z
	21B	X07A X07B
50.25.11↔		BORP MBOR VAC
		VAC I VAC II VBOR
	04	E36A E36B
	06	G10Z G12A G16A
		G16B G18A G33Z
		G38A G38B G38C
	07	H01A H01B H01C
		H09A H09B H09C
		H33Z
	09	J01A J01B
	11	L33Z
	21B	X07A X07B
50.25.12↔		BORP MBOR VAC
		VAC I VAC II VBOR
	04	E36A E36B
	06	G10Z G12A G16A
		G16B G18A G33Z
		G38A G38B G38C
	07	H01A H01B H01C
		H09A H09B H09C
		H33Z
	09	J01A J01B
	11	L33Z
	21B	X07A X07B
50.25.13↔		BORP MBOR VAC
		VAC I VAC II VBOR
	04	E36A E36B
	06	G10Z G12A G16A
		G16B G18A G33Z
		G38A G38B G38C
	07	H01A H01B H01C
		H09A H09B H09C
		H33Z

PROC

CHOP	MDC	DRG
	09	J01A J01B
	11	L33Z
	21B	X07A X07B
50.27.11↔		BORP MBOR VAC
		VAC I VAC II VBOR
	04	E36A E36B
	06	G10Z G12A G16A
		G16B G18A G33Z
		G38A G38B G38C
	07	H01A H01B H01C
		H09A H09B H09C
		H33Z
	09	J01A J01B
	11	L33Z
	21B	X07A X07B
50.27.12↔		BORP MBOR VAC
		VAC I VAC II VBOR
	04	E36A E36B
	06	G10Z G12A G16A
		G16B G18A G33Z
		G38A G38B G38C
	07	H01A H01B H01C
		H09A H09B H09C
		H33Z
	09	J01A J01B
	11	L33Z
	21B	X07A X07B
50.27.13↔		BORP MBOR VAC
		VAC I VAC II VBOR
	04	E36A E36B
	06	G10Z G12A G16A
		G16B G18A G33Z
		G38A G38B G38C
	07	H01A H01B H01C
		H09A H09B H09C
		H33Z
	09	J01A J01B
	11	L33Z
	21B	X07A X07B
50.27.14↔		BORP MBOR VAC
		VAC I VAC II VBOR
	04	E36A E36B
	06	G10Z G12A G16A
		G16B G18A G33Z
		G38A G38B G38C
	07	H01A H01B H01C
		H09A H09B H09C
		H33Z
	09	J01A J01B
	11	L33Z
	21B	X07A X07B
50.27.15↔		BORP MBOR VAC
		VAC I VAC II VBOR
	04	E36A E36B
	06	G10Z G12A G16A
		G16B G18A G33Z
		G38A G38B G38C
	07	H01A H01B H01C
		H09A H09B H09C
		H33Z
	09	J01A J01B
	11	L33Z
	21B	X07A X07B
50.27.19↔		BORP MBOR VAC
		VAC I VAC II VBOR
	04	E36A E36B
	06	G10Z G12A G16A
		G16B G18A G33Z
		G38A G38B G38C
	07	H01A H01B H01C
		H09A H09B H09C
		H33Z
	09	J01A J01B
	11	L33Z
	21B	X07A X07B
50.27.21↔		BORP MBOR VAC
		VAC I VAC II VBOR
	04	E36A E36B
	06	G10Z G12A G16A
		G16B G18A G33Z
		G38A G38B G38C
	07	H01A H01B H01C
		H09A H09B H09C
		H33Z
	09	J01A J01B
	11	L33Z
	21B	X07A X07B
50.27.22↔		BORP MBOR VAC
		VAC I VAC II VBOR
	04	E36A E36B
	06	G10Z G12A G16A
		G16B G18A G33Z
		G38A G38B G38C
	07	H01A H01B H01C
		H09A H09B H09C
		H33Z
	09	J01A J01B
	11	L33Z
	21B	X07A X07B
50.27.23↔		BORP MBOR VAC
		VAC I VAC II VBOR
	04	E36A E36B
	06	G10Z G12A G16A
		G16B G18A G33Z
		G38A G38B G38C
	07	H01A H01B H01C
		H09A H09B H09C
		H33Z
	09	J01A J01B
	11	L33Z
	21B	X07A X07B
50.27.24↔		BORP MBOR VAC
		VAC I VAC II VBOR
	04	E36A E36B
	06	G10Z G12A G16A
		G16B G18A G33Z
		G38A G38B G38C
	07	H01A H01B H01C
		H09A H09B H09C
		H33Z
	09	J01A J01B
	11	L33Z
	21B	X07A X07B
50.27.25↔		BORP MBOR VAC
		VAC I VAC II VBOR
	04	E36A E36B
	06	G10Z G12A G16A
		G16B G18A G33Z
		G38A G38B G38C
	07	H01A H01B H01C
		H09A H09B H09C
		H33Z
	09	J01A J01B
	11	L33Z
	21B	X07A X07B
50.27.29↔		BORP MBOR VAC
		VAC I VAC II VBOR
	04	E36A E36B
	06	G10Z G12A G16A
		G16B G18A G33Z
		G38A G38B G38C
	07	H01A H01B H01C
		H09A H09B H09C
		H33Z
	09	J01A J01B
	11	L33Z
	21B	X07A X07B
50.27.31‡↔	01	B60A
	04	E71B E75A E77A
	07	H41A H41B H41C
		H41D H86A
50.27.32‡↔	01	B60A
	04	E71B E75A E77A
	07	H41A H41B H41C
		H41D H86A
50.27.33‡↔	01	B60A
	04	E71B E75A E77A
	07	H41A H41B H41C
		H41D H86A
50.27.34‡↔	01	B60A
	04	E71B E75A E77A
	07	H41A H41B H41C
		H41D H86A
50.27.35‡↔	01	B60A
	04	E71B E75A E77A
	07	H41A H41B H41C
		H41D H86A
50.27.39‡↔	01	B60A
	04	E71B E75A E77A
	07	H41A H41B H41C
		H41D H86A
50.29‡↔	01	B60A
	04	E71B E75A E77A
	07	H41A H41B H41C
		H41D H86A
50.2A.11↔		BORP KORP MBOR
		MKOR MVE VAC
		VAC I VAC II VBOR
		VKOR
	04	E36A E36B
	06	G10Z G12A G16A
		G16B G18A G33Z
		G38A G38B G38C
	07	H01A H01B H01C
		H09A H09B H09C
		H33Z
	09	J01A J01B
	11	L33Z
	21B	X07A X07B
50.2A.12↔		BORP KORP MBOR
		MKOR MVE VAC
		VAC I VAC II VBOR
		VKOR
	04	E36A E36B
	06	G10Z G12A G16A
		G16B G18A G33Z
		G38A G38B G38C
	07	H01A H01B H01C
		H09A H09B H09C
		H33Z
	09	J01A J01B
	11	L33Z
	21B	X07A X07B
50.2A.21↔		BORP KORP MBOR
		MKOR MVE VAC
		VAC I VAC II VBOR
		VKOR
	04	E36A E36B
	06	G12A G16A G38A
		G38B

CHOP	MDC	DRG
	07	H01A H01B H01C H09A H09B H09C H33Z
	09	J01A J01B
	11	L33Z
	21B	X06A X06B X06C X07A X07B
50.2A.22↔		BORP KORP MBOR MKOR MVE VAC VAC I VAC II VBOR VKOR
	04	E36A E36B
	06	G12A G16A G38A G38B
	07	H01A H01B H01C H09A H09B H09C H33Z
	09	J01A J01B
	11	L33Z
	21B	X06A X06B X06C X07A X07B
50.2A.23↔		BORP KORP MBOR MKOR MVE VAC VAC I VAC II VBOR VKOR
	04	E36A E36B
	06	G12A G16A G38A G38B
	07	H01A H01B H01C H09A H09B H09C H33Z
	09	J01A J01B
	11	L33Z
	21B	X06A X06B X06C X07A X07B
50.2A.24↔		BORP KORP MBOR MKOR MVE VAC VAC I VAC II VBOR VKOR
	04	E36A E36B
	06	G12A G16A G38A G38B
	07	H01A H01B H01C H09A H09B H09C H33Z
	09	J01A J01B
	11	L33Z
	21B	X06A X06B X06C X07A X07B
50.2A.25↔		BORP KORP MBOR MKOR MVE VAC VAC I VAC II VBOR VKOR
	04	E36A E36B
	06	G12A G16A G38A G38B
	07	H01A H01B H01C H09A H09B H09C H33Z
	09	J01A J01B
	11	L33Z
	21B	X06A X06B X06C X07A X07B
50.2A.26↔		BORP KORP MBOR MKOR MVE VAC VAC I VAC II VBOR VKOR
	04	E36A E36B
	06	G12A G16A G38A G38B
	07	H01A H01B H01C H09A H09B H09C H33Z
	09	J01A J01B
	11	L33Z
	21B	X06A X06B X06C X07A X07B
50.2A.27↔		BORP KORP MBOR MKOR MVE VAC VAC I VAC II VBOR VKOR
	04	E36A E36B
	06	G12A G16A G38A G38B
	07	H01A H01B H01C H09A H09B H09C H33Z
	09	J01A J01B
	11	L33Z
	21B	X06A X06B X06C X07A X07B
50.2A.28↔		BORP KORP MBOR MKOR MVE VAC VAC I VAC II VBOR VKOR
	04	E36A E36B
	06	G12A G16A G38A G38B
	07	H01A H01B H01C H09A H09B H09C H33Z
	09	J01A J01B
	11	L33Z
	21B	X06A X06B X06C X07A X07B
50.2A.2A↔		BORP KORP MBOR MKOR MVE VAC VAC I VAC II VBOR VKOR
	04	E36A E36B
	06	G12A G16A G38A G38B
	07	H01A H01B H01C H09A H09B H09C H33Z
	09	J01A J01B
	11	L33Z
	21B	X06A X06B X06C X07A X07B
50.2A.2B↔		BORP KORP MBOR MKOR MVE VAC VAC I VAC II VBOR VKOR
	04	E36A E36B
	06	G12A G16A G38A G38B
	07	H01A H01B H01C H09A H09B H09C H33Z
	09	J01A J01B
	11	L33Z
	21B	X06A X06B X06C X07A X07B
50.2A.2C↔		BORP KORP MBOR MKOR MVE VAC VAC I VAC II VBOR VKOR
	04	E36A E36B
	06	G12A G16A G38A G38B
	07	H01A H01B H01C H09A H09B H09C H33Z
	09	J01A J01B
	11	L33Z
	21B	X06A X06B X06C X07A X07B
50.2A.2D↔		BORP KORP MBOR MKOR MVE VAC VAC I VAC II VBOR VKOR
	04	E36A E36B
	06	G12A G16A G38A G38B
	07	H01A H01B H01C H09A H09B H09C H33Z
	09	J01A J01B
	11	L33Z
	21B	X06A X06B X06C X07A X07B
50.2B.11↔		BORP KORP MBOR MKOR MVE VAC VAC I VAC II VBOR VKOR
	04	E36A E36B
	06	G12A G16A G38A G38B
	07	H01A H01B H09A H09B H09C H33Z
	09	J01A J01B
	11	L33Z
	21B	X06A X06B X06C X07A X07B
50.2B.12↔		BORP KORP MBOR MKOR MVE VAC VAC I VAC II VBOR VKOR
	04	E36A E36B
	06	G12A G16A G38A G38B
	07	H01A H01B H09A H09B H09C H33Z
	09	J01A J01B
	11	L33Z
	21B	X06A X06B X06C X07A X07B
50.2C.11↔		BORP KORP MBOR MKOR MVE VAC VAC I VAC II VBOR VKOR
	04	E36A E36B
	06	G10Z G12A G16A G16B G18A G33Z G38A G38B G38C
	07	H01A H01B H01C H09A H09B H09C H33Z
	09	J01A J01B
	11	L33Z
	21B	X06A X06B X06C X07A X07B
	23	Z02Z
50.2C.12↔		BORP KORP MBOR MKOR MVE VAC VAC I VAC II VBOR VKOR
	04	E36A E36B
	06	G10Z G12A G16A G16B G18A G33Z

PROC

CHOP	MDC	DRG
		G38A G38B G38C
	07	H01A H01B H01C
		H09A H09B H09C
		H33Z
	09	J01A J01B
	11	L33Z
	21B	X06A X06B X06C
		X07A X07B
	23	Z02Z
50.2C.13↔		BORP KORP MBOR
		MKOR MVE VAC
		VAC I VAC II VBOR
		VKOR
	04	E36A E36B
	06	G10Z G12A G16A
		G16B G18A G33Z
		G38A G38B G38C
	07	H01A H01B H01C
		H09A H09B H09C
		H33Z
	09	J01A J01B
	11	L33Z
	21B	X06A X06B X06C
		X07A X07B
	23	Z02Z
50.2C.14↔		BORP KORP MBOR
		MKOR MVE VAC
		VAC I VAC II VBOR
		VKOR
	04	E36A E36B
	06	G10Z G12A G16A
		G16B G18A G33Z
		G38A G38B G38C
	07	H01A H01B H01C
		H09A H09B H09C
		H33Z
	09	J01A J01B
	11	L33Z
	21B	X06A X06B X06C
		X07A X07B
	23	Z02Z
50.2C.15↔		BORP KORP MBOR
		MKOR MVE VAC
		VAC I VAC II VBOR
		VKOR
	04	E36A E36B
	06	G10Z G12A G16A
		G16B G18A G33Z
		G38A G38B G38C
	07	H01A H01B H01C
		H09A H09B H09C
		H33Z
	09	J01A J01B
	11	L33Z
	21B	X06A X06B X06C
		X07A X07B
	23	Z02Z
50.2C.16↔		BORP KORP MBOR
		MKOR MVE VAC
		VAC I VAC II VBOR
		VKOR
	04	E36A E36B
	06	G10Z G12A G16A
		G16B G18A G33Z
		G38A G38B G38C
	07	H01A H01B H01C
		H09A H09B H09C
		H33Z
	09	J01A J01B
	11	L33Z
	21B	X06A X06B X06C
		X07A X07B
	23	Z02Z
50.50↔		BORP KORP MBOR
		MKOR VAC VAC I
		VAC II VBOR VKOR
	04	E36A E36B
	06	G12A G16A G38A
		G38B
	Prä	A01Z A06A A06B
		A06C A07A
50.52↔		BORP KORP MBOR
		MKOR VAC VAC I
		VAC II VBOR VKOR
	04	E36A E36B
	06	G12A G16A G38A
		G38B
	Prä	A01Z A06A A06B
		A06C A07A
50.53↔		BORP KORP MBOR
		MKOR VAC VAC I
		VAC II VBOR VKOR
	04	E36A E36B
	06	G12A G16A G38A
		G38B
	Prä	A01Z A06A A06B
		A06C A07A
50.59↔		BORP KORP MBOR
		MKOR VAC VAC I
		VAC II VBOR VKOR
	04	E36A E36B
	06	G12A G16A G38A
		G38B
	Prä	A01Z A06A A06B
		A06C A07A
50.62↔		BORP MBOR MVE
		VAC VAC I VAC II
		VBOR
	04	E36A E36B
	06	G12A G16A G33Z
		G38A G38B G38C
	07	H01A H01B H01C
		H09A H09B H09C
		H33Z
	11	L33Z
	21B	X06A X06B X06C
		X07A X07B
50.63↔		BORP MBOR MVE
		VAC VAC I VAC II
		VBOR
	04	E36A E36B
	06	G12A G16A G33Z
		G38A G38B G38C
	07	H01A H01B H01C
		H09A H09B H09C
		H33Z
	11	L33Z
	21B	X06A X06B X06C
		X07A X07B
50.69↔		BORP MBOR VAC
		VBOR
	04	E36A E36B
	06	G12A G16A G38A
		G38B
	07	H12A H12B
	21B	X06A X06B X06C
50.71↔		BORP KORP MBOR
		MKOR MVE VAC
		VAC I VAC II VBOR
		VKOR
	04	E36A E36B
	06	G10Z G12A G16A
		G16B G18A G33Z
		G38A G38B G38C
	07	H01A H01B H01C
		H09A H09B H09C
		H33Z
	09	J01A J01B
	11	L33Z
	21B	X06A X06B X06C
		X07A X07B
	23	Z02Z
50.92‡↔		KP KPP
	01	B60A
	07	H37A H37B
50.95‡↔	01	B60A
	04	E71B E75A E77A
	07	H41A H41B H41C
		H41D H86A
50.96‡↔	01	B60A
	04	E71B E75A E77A
	06	G46A G46B G46C
		G46D G72A G86C
50.99.10↔		BORP MBOR VAC
		VAC I VAC II VBOR
	04	E36A E36B
	06	G12A G16A G38A
		G38B
	07	H12A H12B
50.99.11↔		BORP MBOR VAC
		VAC I VAC II VBOR
	04	E36A E36B
	06	G12A G16A G38A
		G38B
	07	H12A H12B
51.02↔		BORP MBOR VAC
		VAC I VAC II VBOR
	04	E36A E36B
	06	G12A G12B G16A
		G38A G38B
	07	H06Z
51.03↔		BORP MBOR VAC
		VAC I VAC II VBOR
	04	E36A E36B
	06	G12A G12B G16A
		G38A G38B
	07	H06Z
51.04↔		BORP MBOR VAC
		VAC I VAC II VBOR
	04	E36A E36B
	06	G12A G16A G38A
		G38B
	07	H06Z
51.10‡↔	01	B60A
	04	E71B E75A E77A
	07	H07A H07B H41A
		H41B H41C H41D
		H86A
51.11‡↔	01	B60A
	04	E71B E75A E77A
	07	H07A H07B H41A
		H41B H41C H41D
		H86A
51.12‡↔		AKBB
	01	B60A
	04	E71B E75A E77A
	07	H41A H41B H41C
		H41D H86A
	16	Q86A
51.13↔		BORP MBOR VAC

CHOP	MDC	DRG
		VAC I VAC II VBOR
	04	E36A E36B
	06	G12A G12B G16A G38A G38B
	07	H12A H12B
51.14‡↔		AKBB
	01	B60A
	04	E71B E75A E77A
	07	H41A H41B H41C H41D H86A
	16	Q86A
51.16.00‡↔		AKBB
	01	B60A
	04	E71B E75A E77A
	07	H41A H41B H41C H41D H86A
	16	Q86A
51.16.10‡↔		AKBB
	01	B60A
	04	E71B E75A E77A
	07	H41A H41B H41C H41D H86A
	16	Q86A
51.16.99‡↔		AKBB
	01	B60A
	04	E71B E75A E77A
	07	H41A H41B H41C H41D H86A
	16	Q86A
51.21↔		BORP MBOR VAC VAC I VAC II VBOR
	04	E36A E36B
	06	G12A G12B G16A G38A G38B
	07	H07A H07B H07C
	21B	X06A X06B
51.22.00↔		BORP MBOR VAC VAC I VAC II VBOR
	04	E36A E36B
	06	G12A G12B G16A G38A G38B
	07	H07A H07B H07C
	21B	X06A X06B
51.22.10↔		BORP MBOR VAC VAC I VAC II VBOR
	04	E36A E36B
	06	G09C G12A G12B G16A G38A G38B
	07	H07A H07B H07C
	21B	X06A X06B
51.22.11↔		BORP MBOR VAC VAC I VAC II VBOR
	04	E36A E36B
	06	G09C G12A G12B G16A G38A G38B
	07	H07A H07B H07C
	21B	X06A X06B
51.22.12↔		BORP MBOR VAC VAC I VAC II VBOR
	04	E36A E36B
	06	G12A G12B G16A G38A G38B
	07	H07A H07B H07C
	21B	X06A X06B
51.22.99↔		BORP MBOR VAC VAC I VAC II VBOR
	04	E36A E36B
	06	G12A G12B G16A G38A G38B
	07	H07A H07B H07C
	21B	X06A X06B
51.23↔		BORP MBOR VAC VAC I VAC II VBOR
	04	E36A E36B
	06	G12A G12B G16A G38A G38B
	07	H07A H07B H07C H07D
	21B	X06A X06B
51.24↔		BORP MBOR VAC VAC I VAC II VBOR
	04	E36A E36B
	06	G12A G12B G16A G38A G38B
	07	H07A H07B H07C H07D
	21B	X06A X06B
51.31↔		BORP MBOR MVE VAC VAC I VAC II VBOR
	04	E36A E36B
	06	G10Z G12A G12B G16A G33Z G38A G38B G38C
	07	H01A H01B H01C H05A H09A H09B H09C H33Z
	21B	X06A X06B X06C
51.32↔		BORP MBOR MVE VAC VAC I VAC II VBOR
	04	E36A E36B
	06	G10Z G12A G16A G33Z G38A G38B G38C
	07	H01A H01B H01C H05A H09A H09B H09C H33Z
	11	L33Z
	21B	X06A X06B X06C X07A X07B
51.33↔		BORP MBOR MVE VAC VAC I VAC II VBOR
	04	E36A E36B
	06	G10Z G12A G16A G33Z G38A G38B G38C
	07	H01A H01B H01C H09A H09B H09C H33Z
	11	L33Z
	21B	X06A X06B X06C
51.34↔		BORP MBOR MVE VAC VAC I VAC II VBOR
	04	E36A E36B
	06	G10Z G12A G16A G33Z G38A G38B G38C
	07	H01A H01B H01C H05A H09A H09B H09C H33Z
	11	L33Z
	21B	X06A X06B X06C X07A X07B
51.35↔		BORP MBOR MVE VAC VAC I VAC II VBOR
	04	E36A E36B
	06	G10Z G12A G16A G33Z G38A G38B G38C
	07	H05A H33Z
	11	L33Z
	21B	X06A X06B X06C X07A X07B
51.36↔		BORP MBOR MVE VAC VAC I VAC II VBOR
	04	E36A E36B
	06	G10Z G12A G16A G33Z G38A G38B G38C
	07	H01A H01B H01C H05A H09A H09B H09C H33Z
	11	L33Z
	21B	X06A X06B X06C X07A X07B
51.37↔		BORP MBOR MVE VAC VAC I VAC II VBOR
	04	E36A E36B
	06	G10Z G12A G16A G33Z G38A G38B G38C
	07	H01A H01B H01C H05A H09A H09B H09C H33Z
	11	L33Z
	21B	X06A X06B X06C X07A X07B
51.38.00‡↔	01	B60A
	04	E71B E75A E77A
	07	H41A H41B H41C H41D H86A
51.38.09‡↔	01	B60A
	04	E71B E75A E77A
	07	H41A H41B H41C H41D H86A
51.38.11↔		BORP MBOR VAC VAC I VAC II VBOR
	04	E36A E36B
	06	G10Z G12A G16A G33Z G38A G38B G38C
	07	H05A H33Z
	11	L33Z
	21B	X06A X06B X06C X07A X07B
51.38.21↔		BORP MBOR VAC VAC I VAC II VBOR
	04	E36A E36B
	06	G10Z G12A G16A G33Z G38A G38B G38C
	07	H05A H33Z
	11	L33Z
	21B	X06A X06B X06C X07A X07B
51.38.31‡↔	01	B60A
	04	E71B E75A E77A
	06	G46A G46B
	07	H41A H41B H41C H41D H61A H64A H86A
51.39↔		BORP MBOR VAC VAC I VAC II VBOR
	04	E36A E36B

PROC

PROC

CHOP	MDC	DRG
	06	G10Z G12A G16A G33Z G38A G38B G38C
	07	H05A H33Z
	11	L33Z
	21B	X06A X06B X06C X07A X07B
51.41.00↔		BORP MBOR VAC VAC I VAC II VBOR
	04	E36A E36B
	06	G12A G12B G16A G38A G38B
	07	H12A H12B
51.41.09↔		BORP MBOR VAC VAC I VAC II VBOR
	04	E36A E36B
	06	G12A G12B G16A G38A G38B
	07	H12A H12B
51.41.11↔		BORP MBOR VAC VAC I VAC II VBOR
	04	E36A E36B
	06	G12A G12B G16A G38A G38B
	07	H05A H05B H33Z
	21B	X06A X06B X06C
51.41.21↔		BORP MBOR VAC VAC I VAC II VBOR
	04	E36A E36B
	06	G12A G12B G16A G38A G38B
	07	H05A H05B H33Z
	21B	X06A X06B X06C
51.42.00↔		BORP MBOR VAC VAC I VAC II VBOR
	04	E36A E36B
	06	G12A G12B G16A G38A G38B
	07	H12A H12B
51.42.09↔		BORP MBOR VAC VAC I VAC II VBOR
	04	E36A E36B
	06	G12A G12B G16A G38A G38B
	07	H12A H12B
51.42.11↔		BORP MBOR VAC VAC I VAC II VBOR
	04	E36A E36B
	06	G12A G12B G16A G38A G38B
	07	H05A H05B H33Z
	21B	X06A X06B X06C
51.42.21↔		BORP MBOR VAC VAC I VAC II VBOR
	04	E36A E36B
	06	G12A G12B G16A G38A G38B
	07	H05A H05B H33Z
	21B	X06A X06B X06C
51.43↔		BORP MBOR VAC VAC I VAC II VBOR
	04	E36A E36B
	06	G10Z G12A G12B G16A G33Z G38A G38B G38C
	07	H05A H33Z
	21B	X06A X06B X06C
51.44.00↔		BORP MBOR VAC VAC I VAC II VBOR
	04	E36A E36B
	06	G12A G12B G16A G38A G38B
	07	H12A H12B
51.44.09↔		BORP MBOR VAC VAC I VAC II VBOR
	04	E36A E36B
	06	G12A G12B G16A G38A G38B
	07	H12A H12B
51.44.11↔		BORP MBOR VAC VBOR
	04	E36A E36B
	06	G12A G12B G16A G38A G38B
	07	H05A H05B H33Z
	21B	X06A X06B X06C
51.44.21↔		BORP MBOR VAC VBOR
	04	E36A E36B
	06	G12A G12B G16A G38A G38B
	07	H05A H05B H33Z
	21B	X06A X06B X06C
51.49.00↔		BORP MBOR VAC VAC I VAC II VBOR
	04	E36A E36B
	06	G12A G12B G16A G38A G38B
	07	H12A H12B
51.49.09↔		BORP MBOR VAC VAC I VAC II VBOR
	04	E36A E36B
	06	G12A G12B G16A G38A G38B
	07	H12A H12B
51.49.11↔		BORP MBOR VAC VBOR
	04	E36A E36B
	06	G12A G12B G16A G38A G38B
	07	H05A H05B H33Z
	21B	X06A X06B X06C
51.49.21↔		BORP MBOR VAC VBOR
	04	E36A E36B
	06	G12A G12B G16A G38A G38B
	07	H05A H05B H33Z
	21B	X06A X06B X06C
51.61↔		BORP MBOR VAC VAC I VAC II VBOR
	04	E36A E36B
	06	G12A G12B G16A G38A G38B
	07	H05A H05B H33Z
	21B	X06A X06B X06C
51.62↔		BORP MBOR VAC VAC I VAC II VBOR
	04	E36A E36B
	06	G12A G12B G16A G38A G38B
	07	H05A H05B H33Z
	21B	X06A X06B X06C
51.63↔		BORP MBOR VAC VBOR
	04	E36A E36B
	06	G12A G12B G16A G38A G38B
	07	H05A H05B H33Z
51.64.00‡↔	01	B60A
	04	E71B E75A E77A
	07	H41A H41B H41C H41D H86A
51.64.10‡↔	01	B60A
	04	E71B E75A E77A
	07	H41A H41B H41C H41D H86A
51.64.11‡↔	01	B60A
	04	E71B E75A E77A
	07	H41A H41B H86A
51.64.12‡↔	01	B60A
	04	E71B E75A E77A
	07	H41A H41B H41C H41D H86A
51.64.19‡↔	01	B60A
	04	E71B E75A E77A
	07	H41A H41B H41C H41D H86A
51.64.99‡↔	01	B60A
	04	E71B E75A E77A
	07	H41A H41B H41C H41D H86A
51.69↔		BORP MBOR VAC VAC I VAC II VBOR
	04	E36A E36B
	06	G10Z G12A G12B G16A G33Z G38A G38B G38C
	07	H05A H33Z
51.71↔		BORP MBOR VAC VBOR
	04	E36A E36B
	06	G10Z G12A G12B G16A G33Z G38A G38B G38C
	07	H06Z
	21B	X06A X06B X06C
51.72↔		BORP MBOR VAC VBOR
	04	E36A E36B
	06	G10Z G12A G12B G16A G33Z G38A G38B G38C
	07	H05A H33Z
	21B	X06A X06B X06C
51.79↔		BORP MBOR VAC VBOR
	04	E36A E36B
	06	G10Z G12A G12B G16A G33Z G38A G38B G38C
	07	H06Z
	21B	X06A X06B X06C
51.81↔		BORP MBOR VAC VBOR
	04	E36A E36B
	06	G12A G12B G16A G38A G38B
	07	H05A H05B H33Z
	21B	X06A X06B X06C
51.82‡↔	01	B60A
	04	E71B E75A E77A
	06	G12A G12B
	07	H41A H41B H41C H41D H86A
51.83↔		BORP MBOR VAC VBOR
	04	E36A E36B
	06	G12A G12B G16A G38A G38B

CHOP	MDC	DRG
	07	H05A H05B H33Z
	21B	X06A X06B X06C
51.84‡↔	01	B60A
	04	E71B E75A E77A
	07	H07A H07B H41A H41B H41C H41D H86A
51.85‡↔	01	B60A
	04	E71B E75A E77A
	07	H07A H07B H41A H41B H41C H41D H86A
51.86‡↔	01	B60A
	04	E71B E75A E77A
	07	H07A H07B H41A H41B H41C H41D H86A
51.87.00‡↔	01	B60A
	04	E71B E75A E77A
	07	H07A H07B H41A H41B H41C H41D H86A
51.87.09‡↔	01	B60A
	04	E71B E75A E77A
	07	H07A H07B H41A H41B H41C H41D H86A
51.87.10‡↔	01	B60A
	04	E71B E75A E77A
	07	H07A H07B H41A H41B H41C H41D H86A
51.87.13‡↔	01	B60A
	04	E71B E75A E77A
	07	H07A H07B H41A H41B H41C H41D H86A
51.87.23‡↔	01	B60A
	04	E71B E75A E77A
	07	H07A H07B H41A H41B H41C H41D H86A
51.87.24‡↔	01	B60A
	04	E71B E75A E77A
	07	H07A H07B H41A H41B H41C H41D H86A
51.87.25‡↔	01	B60A
	04	E71B E75A E77A
	07	H07A H07B H41A H41B H41C H41D H86A
51.87.26‡↔	01	B60A
	04	E71B E75A E77A
	07	H07A H07B H41A H41B H41C H41D H86A
51.87.27‡↔	01	B60A
	04	E71B E75A E77A
	07	H07A H07B H41A H41B H41C H41D H86A
51.87.28‡↔	01	B60A
	04	E71B E75A E77A
	07	H07A H07B H41A H41B H41C H41D H86A
51.87.30‡↔	01	B60A
	04	E71B E75A E77A
	07	H07A H07B H41A H41B H41C H41D H86A
51.87.31‡↔	01	B60A
	04	E71B E75A E77A
	07	H07A H07B H41A H41B H41C H41D H86A
51.87.33‡↔	01	B60A
	04	E71B E75A E77A
	07	H07A H07B H41A H41B H41C H41D H86A
51.87.34‡↔	01	B60A
	04	E71B E75A E77A
	07	H07A H07B H41A H41B H41C H41D H86A
51.87.35‡↔	01	B60A
	04	E71B E75A E77A
	07	H07A H07B H41A H41B H41C H41D H86A
51.87.36‡↔	01	B60A
	04	E71B E75A E77A
	07	H07A H07B H41A H41B H41C H41D H86A
51.88‡↔	01	B60A
	04	E71B E75A E77A
	07	H07A H07B H41A H41B H41C H41D H86A
51.89↔		BORP MBOR VAC VBOR
	04	E36A E36B
	06	G12A G12B G16A G38A G38B
	07	H05A H05B H33Z
51.91↔		BORP MBOR VAC VAC I VAC II VBOR
	04	E36A E36B
	06	G12A G16A G38A G38B
	07	H05A H05B H33Z
	21B	X06A X06B X06C
51.92↔		BORP MBOR VAC VAC I VAC II VBOR
	04	E36A E36B
	06	G12A G16A G38A G38B
	07	H05A H05B H33Z
	21B	X06A X06B X06C
51.93↔		BORP MBOR VAC VAC I VAC II VBOR
	04	E36A E36B
	06	G12A G12B G16A G38A G38B
	07	H05A H05B H33Z
	21B	X06A X06B X06C
51.94↔		BORP MBOR VAC VAC I VAC II VBOR
	04	E36A E36B
	06	G10Z G12A G12B G16A G33Z G38A G38B G38C
	07	H05A H33Z
	21B	X06A X06B X06C
51.95.00‡↔	01	B60A
	04	E71B E75A E77A
	07	H41A H41B H41C H41D H86A
51.95.10‡↔		KP KPP
	01	B60A
	04	E71B E75A E77A
	07	H41A H41B H41C H41D H86A
51.95.11‡↔		KP KPP
	01	B60A
	04	E71B E75A E77A
	07	H41A H41B H41C H41D H86A
51.95.20↔		BORP MBOR VAC VAC I VAC II VBOR
	04	E36A E36B
	06	G10Z G12A G12B G16A G33Z G38A G38B G38C
	07	H01A H01B H01C H09A H09B H09C H33Z
	21B	X06A X06B X06C
51.95.21↔		BORP MBOR VAC VAC I VAC II VBOR
	04	E36A E36B
	06	G10Z G12A G12B G16A G33Z G38A G38B G38C
	07	H01A H01B H01C H09A H09B H09C H33Z
	21B	X06A X06B X06C
51.95.99‡↔		KP KPP
	01	B60A
	04	E71B E75A E77A
	07	H41A H41B H41C H41D H86A
51.97‡↔	01	B60A
	04	E71B E75A E77A
	07	H41A H41B H41C H41D H86A
51.98.10‡↔	01	B60A
	04	E71B E75A E77A
	07	H41A H41B H41C H41D H86A
51.98.12‡↔	01	B60A
	04	E71B E75A E77A
	07	H41A H41B H41C H41D H86A
51.99.90‡↔	01	B60A
	04	E71B E75A E77A
	06	G12A G12B
	07	H41A H41B H41C H41D H86A
51.99.91‡↔	01	B60A
	04	E71B E75A E77A
	06	G12A G12B
	07	H41A H41B H41C H41D H86A
51.99.99‡↔	01	B60A
	04	E71B E75A E77A
	06	G12A G12B
	07	H41A H41B H41C H41D H86A
51.9A.00‡↔	01	B60A
	04	E71B E75A E77A
	07	H07A H07B H41A H41B H41C H41D H86A
51.9A.09‡↔	01	B60A
	04	E71B E75A E77A

PROC

CHOP	MDC	DRG
	07	H07A H07B H41A H41B H41C H41D H86A
51.9A.11‡↔	01	B60A
	04	E71B E75A E77A
	07	H41A H41B H41C H41D H86A
51.9A.12‡↔	01	B60A
	04	E71B E75A E77A
	07	H41A H41B H41C H41D H86A
51.9A.21‡↔	01	B60A
	04	E71B E75A E77A
	07	H41A H41B H41C H41D H86A
51.9A.22‡↔	01	B60A
	04	E71B E75A E77A
	07	H41A H41B H41C H41D H86A
51.9A.23‡↔	01	B60A
	04	E71B E75A E77A
	07	H41A H41B H41C H41D H86A
51.9A.24‡↔	01	B60A
	04	E71B E75A E77A
	07	H41A H41B H41C H41D H86A
51.9A.25‡↔	01	B60A
	04	E71B E75A E77A
	07	H41A H41B H41C H41D H86A
51.9A.26‡↔	01	B60A
	04	E71B E75A E77A
	07	H41A H41B H41C H41D H86A
51.9A.31‡↔	01	B60A
	04	E71B E75A E77A
	07	H41A H41B H41C H41D H86A
51.9A.32‡↔	01	B60A
	04	E71B E75A E77A
	07	H41A H41B H41C H41D H86A
51.9A.33‡↔	01	B60A
	04	E71B E75A E77A
	07	H41A H41B H41C H41D H86A
51.9A.34‡↔	01	B60A
	04	E71B E75A E77A
	07	H41A H41B H41C H41D H86A
51.9A.35‡↔	01	B60A
	04	E71B E75A E77A
	07	H41A H41B H41C H41D H86A
51.9A.36‡↔	01	B60A
	04	E71B E75A E77A
	07	H41A H41B H41C H41D H86A
51.9A.41↔		BORP MBOR VAC VAC I VAC II VBOR
	04	E36A E36B
	06	G10Z G12A G12B G16A G33Z G38A G38B G38C
	07	H01A H01B H01C H09A H09B H09C H33Z
	21B	X06A X06B X06C
51.9A.42↔		BORP MBOR VAC VAC I VAC II VBOR
	04	E36A E36B
	06	G10Z G12A G12B G16A G33Z G38A G38B G38C
	07	H01A H01B H01C H09A H09B H09C H33Z
	21B	X06A X06B X06C
51.9A.51↔		BORP MBOR VAC VAC I VAC II VBOR
	04	E36A E36B
	06	G10Z G12A G12B G16A G33Z G38A G38B G38C
	07	H01A H01B H01C H09A H09B H09C H33Z
	21B	X06A X06B X06C
51.9A.52↔		BORP MBOR VAC VAC I VAC II VBOR
	04	E36A E36B
	06	G10Z G12A G12B G16A G33Z G38A G38B G38C
	07	H01A H01B H01C H09A H09B H09C H33Z
	21B	X06A X06B X06C
51.9A.53↔		BORP MBOR VAC VAC I VAC II VBOR
	04	E36A E36B
	06	G10Z G12A G12B G16A G33Z G38A G38B G38C
	07	H01A H01B H01C H09A H09B H09C H33Z
	21B	X06A X06B X06C
51.9A.54↔		BORP MBOR VAC VAC I VAC II VBOR
	04	E36A E36B
	06	G10Z G12A G12B G16A G33Z G38A G38B G38C
	07	H01A H01B H01C H09A H09B H09C H33Z
	21B	X06A X06B X06C
51.9A.55↔		BORP MBOR VAC VAC I VAC II VBOR
	04	E36A E36B
	06	G10Z G12A G12B G16A G33Z G38A G38B G38C
	07	H01A H01B H01C H09A H09B H09C H33Z
	21B	X06A X06B X06C
51.9A.56↔		BORP MBOR VAC VAC I VAC II VBOR
	04	E36A E36B
	06	G10Z G12A G12B G16A G33Z G38A G38B G38C
	07	H01A H01B H01C H09A H09B H09C H33Z
	21B	X06A X06B X06C
51.9A.61↔		BORP MBOR VAC VAC I VAC II VBOR
	04	E36A E36B
	06	G10Z G12A G12B G16A G33Z G38A G38B G38C
	07	H01A H01B H01C H09A H09B H09C H33Z
	21B	X06A X06B X06C
51.9A.62↔		BORP MBOR VAC VAC I VAC II VBOR
	04	E36A E36B
	06	G10Z G12A G12B G16A G33Z G38A G38B G38C
	07	H01A H01B H01C H09A H09B H09C H33Z
	21B	X06A X06B X06C
51.9A.63↔		BORP MBOR VAC VAC I VAC II VBOR
	04	E36A E36B
	06	G10Z G12A G12B G16A G33Z G38A G38B G38C
	07	H01A H01B H01C H09A H09B H09C H33Z
	21B	X06A X06B X06C
51.9A.64↔		BORP MBOR VAC VAC I VAC II VBOR
	04	E36A E36B
	06	G10Z G12A G12B G16A G33Z G38A G38B G38C
	07	H01A H01B H01C H09A H09B H09C H33Z
	21B	X06A X06B X06C
51.9A.65↔		BORP MBOR VAC VAC I VAC II VBOR
	04	E36A E36B
	06	G10Z G12A G12B G16A G33Z G38A G38B G38C
	07	H01A H01B H01C H09A H09B H09C H33Z
	21B	X06A X06B X06C
51.9A.66↔		BORP MBOR VAC VAC I VAC II VBOR
	04	E36A E36B
	06	G10Z G12A G12B G16A G33Z G38A G38B G38C
	07	H01A H01B H01C H09A H09B H09C H33Z
	21B	X06A X06B X06C
51.9A.71↔		BORP MBOR VAC VAC I VAC II VBOR
	04	E36A E36B
	06	G10Z G12A G12B G16A G33Z G38A G38B G38C
	07	H01A H01B H01C H09A H09B H09C H33Z
	21B	X06A X06B X06C
51.9A.72↔		BORP MBOR VAC

CHOP	MDC	DRG
		VAC I VAC II VBOR
	04	E36A E36B
	06	G10Z G12A G12B G16A G33Z G38A G38B G38C
	07	H01A H01B H01C H09A H09B H09C H33Z
	21B	X06A X06B X06C
51.9A.81↔		BORP MBOR VAC VAC I VAC II VBOR
	04	E36A E36B
	06	G10Z G12A G12B G16A G33Z G38A G38B G38C
	07	H01A H01B H01C H09A H09B H09C H33Z
	21B	X06A X06B X06C
51.9A.82↔		BORP MBOR VAC VAC I VAC II VBOR
	04	E36A E36B
	06	G10Z G12A G12B G16A G33Z G38A G38B G38C
	07	H01A H01B H01C H09A H09B H09C H33Z
	21B	X06A X06B X06C
51.9A.83↔		BORP MBOR VAC VAC I VAC II VBOR
	04	E36A E36B
	06	G10Z G12A G12B G16A G33Z G38A G38B G38C
	07	H01A H01B H01C H09A H09B H09C H33Z
	21B	X06A X06B X06C
51.9A.84↔		BORP MBOR VAC VAC I VAC II VBOR
	04	E36A E36B
	06	G10Z G12A G12B G16A G33Z G38A G38B G38C
	07	H01A H01B H01C H09A H09B H09C H33Z
	21B	X06A X06B X06C
51.9A.85↔		BORP MBOR VAC VAC I VAC II VBOR
	04	E36A E36B
	06	G10Z G12A G12B G16A G33Z G38A G38B G38C
	07	H01A H01B H01C H09A H09B H09C H33Z
	21B	X06A X06B X06C
51.9A.86↔		BORP MBOR VAC VAC I VAC II VBOR
	04	E36A E36B
	06	G10Z G12A G12B G16A G33Z G38A G38B G38C
	07	H01A H01B H01C H09A H09B H09C H33Z
	21B	X06A X06B X06C
51.9A.A1↔		BORP MBOR VAC VAC I VAC II VBOR
	04	E36A E36B
	06	G10Z G12A G12B G16A G33Z G38A G38B G38C
	07	H01A H01B H01C H09A H09B H09C H33Z
	21B	X06A X06B X06C
51.9A.A2↔		BORP MBOR VAC VAC I VAC II VBOR
	04	E36A E36B
	06	G10Z G12A G12B G16A G33Z G38A G38B G38C
	07	H01A H01B H01C H09A H09B H09C H33Z
	21B	X06A X06B X06C
51.9A.A3↔		BORP MBOR VAC VAC I VAC II VBOR
	04	E36A E36B
	06	G10Z G12A G12B G16A G33Z G38A G38B G38C
	07	H01A H01B H01C H09A H09B H09C H33Z
	21B	X06A X06B X06C
51.9A.A4↔		BORP MBOR VAC VAC I VAC II VBOR
	04	E36A E36B
	06	G10Z G12A G12B G16A G33Z G38A G38B G38C
	07	H01A H01B H01C H09A H09B H09C H33Z
	21B	X06A X06B X06C
51.9A.A5↔		BORP MBOR VAC VAC I VAC II VBOR
	04	E36A E36B
	06	G10Z G12A G12B G16A G33Z G38A G38B G38C
	07	H01A H01B H01C H09A H09B H09C H33Z
	21B	X06A X06B X06C
51.9A.A6↔		BORP MBOR VAC VAC I VAC II VBOR
	04	E36A E36B
	06	G10Z G12A G12B G16A G33Z G38A G38B G38C
	07	H01A H01B H01C H09A H09B H09C H33Z
	21B	X06A X06B X06C
52.01.00‡↔	01	B60A
	04	E71B E75A E77A
	06	G46A G46B G46C G46D G72A G86C
	07	H41A H41B H41C H41D H86A
52.01.11‡↔		KP
	01	B60A
	04	E71B E75A E77A
	06	G46A G46B G46C G46D G72A G86C
	07	H41A H41B H41C H41D H86A
52.01.12↔		BORP MBOR VAC VAC I VAC II VBOR
	04	E36A E36B
	06	G10Z G12A G16A G33Z G38A G38B G38C
	07	H01A H01B H01C H09A H09B H09C H33Z
	11	L33Z
	21B	X06A X06B X06C
52.01.13↔		BORP MBOR VAC VAC I VAC II VBOR
	04	E36A E36B
	06	G10Z G12A G16A G33Z G38A G38B G38C
	07	H01A H01B H01C H09A H09B H09C H33Z
	11	L33Z
	21B	X06A X06B X06C
52.01.21‡↔		KP
	01	B60A
	04	E71B E75A E77A
	06	G46A G46B G46C G46D G72A G86C
	07	H41A H41B H41C H41D H86A
52.01.22↔		BORP MBOR VAC VAC I VAC II VBOR
	04	E36A E36B
	06	G10Z G12A G16A G33Z G38A G38B G38C
	07	H01A H01B H01C H09A H09B H09C H33Z
	11	L33Z
	21B	X06A X06B X06C
52.01.23↔		BORP MBOR VAC VAC I VAC II VBOR
	04	E36A E36B
	06	G10Z G12A G16A G33Z G38A G38B G38C
	07	H01A H01B H01C H09A H09B H09C H33Z
	11	L33Z
	21B	X06A X06B X06C
52.01.99‡↔		KP
	01	B60A
	04	E71B E75A E77A
	06	G46A G46B G46C G46D G72A G86C
	07	H41A H41B H41C H41D H86A
52.09.00↔		BORP MBOR VAC VAC I VAC II VBOR
	04	E36A E36B
	06	G12A G16A G33Z G38A G38B G38C
	07	H01A H01B H01C H09A H09B H09C H33Z
52.09.10↔		BORP MBOR VAC VAC I VAC II VBOR

PROC

PROC

CHOP	MDC	DRG
	04	E36A E36B
	06	G12A G16A G33Z G38A G38B G38C
	07	H01A H01B H01C H09A H09B H09C H33Z
52.09.11↔		BORP MBOR VAC VAC I VAC II VBOR
	04	E36A E36B
	06	G12A G16A G33Z G38A G38B G38C
	07	H01A H01B H01C H09A H09B H09C H33Z
52.09.21‡↔		KP
	01	B60A
	04	E71B E75A E77A
	06	G46A G46B G46C G46D G72A G86C
	07	H41A H41B H41C H41D H86A
52.09.22‡↔		KP
	01	B60A
	04	E71B E75A E77A
	06	G46A G46B G46C G46D G72A G86C
	07	H41A H41B H41C H41D H86A
52.09.99↔		BORP MBOR VAC VAC I VAC II VBOR
	04	E36A E36B
	06	G12A G16A G33Z G38A G38B G38C
	07	H01A H01B H01C H09A H09B H09C H33Z
52.11.09‡↔		AKBB
	01	B60A
	04	E71B E75A E77A
	07	H41A H41B H41C H41D H86A
	16	Q86A
52.11.11‡↔		AKBB
	01	B60A
	04	E71B E75A E77A
	07	H41A H41B H41C H41D H86A
	16	Q86A
52.11.12‡↔		KP
	01	B60A
	04	E71B E75A E77A
	06	G46A G46B G46C G46D G72A G86C
	07	H41A H41B H41C H41D H86A
52.12↔		BORP MBOR VAC VAC I VAC II VBOR
	04	E36A E36B
	06	G12A G12B G16A G38A G38B
	07	H12A H12B
	10	K09A K09B
	21B	X06A X06B X06C
52.13‡↔		AKBB
	01	B60A
	04	E71B E75A E77A
	07	H07A H07B H41A H41B H41C H41D H86A
	16	Q86A

CHOP	MDC	DRG
52.14‡↔		AKBB
	01	B60A
	04	E71B E75A E77A
	07	H41A H41B H41C H41D H86A
	16	Q86A
52.21‡↔	01	B60A
	04	E71B E75A E77A
	07	H41A H41B H41C H41D H86A
52.22.00↔		BORP MBOR VAC VAC I VAC II VBOR
	04	E36A E36B
	06	G12A G16A G33Z G38A G38B G38C
	07	H01A H01B H01C H09A H09B H09C H33Z
	10	K09A K09B
52.22.11‡↔	01	B60A
	04	E71B E75A E77A
	07	H41A H41B H41C H41D H86A
52.22.12‡↔	01	B60A
	04	E71B E75A E77A
	07	H41A H41B H41C H41D H86A
52.22.99↔		BORP MBOR VAC VAC I VAC II VBOR
	04	E36A E36B
	06	G12A G16A G33Z G38A G38B G38C
	07	H01A H01B H01C H09A H09B H09C H33Z
	10	K09A K09B
52.3↔		BORP MBOR VAC VAC I VAC II VBOR
	04	E36A E36B
	06	G10Z G12A G16A G33Z G38A G38B G38C
	07	H01A H01B H01C H09A H09B H09C H33Z
52.4↔		BORP MBOR VAC VAC I VAC II VBOR
	04	E36A E36B
	06	G10Z G12A G16A G33Z G38A G38B G38C
	07	H01A H01B H01C H09A H09B H09C H33Z
	11	L33Z
	21B	X06A X06B X06C
52.50↔		BORP KORP MBOR MKOR VAC VAC I VAC II VBOR VKOR
	04	E36A E36B
	06	G03B G10Z G12A G12B G16A G33Z G38A G38B G38C
	07	H01A H01B H01C H09A H09B H33Z
	11	L33Z
	21B	X06A X06B X06C X07A X07B
52.51.10↔		BORP KORP MBOR MKOR MVE VAC VAC I VAC II VBOR VKOR
	04	E36A E36B
	06	G12A G16A G38A G38B
	07	H01A H01B H01C H09A H09B H09C H33Z
	11	L33Z
	21B	X06A X06B X06C X07A X07B
52.51.20↔		BORP KORP MBOR MKOR MVE VAC VAC I VAC II VBOR VKOR
	04	E36A E36B
	06	G12A G16A G38A G38B
	07	H01A H01B H01C H09A H09B H09C H33Z
	11	L33Z
	21B	X06A X06B X06C X07A X07B
52.51.31↔		BORP KORP MBOR MKOR MVE VAC VAC I VAC II VBOR VKOR
	04	E36A E36B
	06	G12A G16A G38A G38B
	07	H01A H01B H01C H09A H09B H09C H33Z
	11	L33Z
	21B	X06A X06B X06C X07A X07B
52.52.11↔		BORP KORP MBOR MKOR MVE VAC VAC I VAC II VBOR VKOR
	04	E36A E36B
	06	G03B G10Z G12A G12B G16A G33Z G38A G38B G38C
	07	H01A H01B H01C H09A H09B H33Z
	10	K09A K09B
	11	L33Z
	21B	X06A X06B X06C X07A X07B
52.52.12↔		BORP KORP MBOR MKOR MVE VAC VAC I VAC II VBOR VKOR
	04	E36A E36B
	06	G03B G10Z G12A G12B G16A G33Z G38A G38B G38C
	07	H01A H01B H01C H09A H09B H33Z
	10	K09A K09B
	11	L33Z
	21B	X06A X06B X06C X07A X07B
52.54↔		BORP KORP MBOR MKOR VAC VAC I VAC II VBOR VKOR
	04	E36A E36B
	06	G12A G16A G38A

CHOP	MDC	DRG
		G38B
	07	H01A H01B H01C H09A H09B H33Z
	11	L33Z
	21B	X06A X06B X06C X07A X07B
52.59↔		BORP KORP MBOR MKOR VAC VAC I VAC II VBOR VKOR
	04	E36A E36B
	06	G03B G10Z G12A G12B G16A G33Z G38A G38B G38C
	07	H01A H01B H01C H09A H09B H33Z
	11	L33Z
	21B	X06A X06B X06C X07A X07B
52.60↔		BORP KORP MBOR MKOR VAC VAC I VAC II VBOR VKOR
	04	E36A E36B
	06	G12A G16A G38A G38B
	07	H01A H01B H01C H09A H09B H09C H33Z
	11	L33Z
	21B	X06A X06B X06C X07A X07B
52.61↔		BORP KORP MBOR MKOR MVE VAC VAC I VAC II VBOR VKOR
	04	E36A E36B
	06	G12A G16A G38A G38B
	07	H01A H01B H01C H09A H09B H09C H33Z
	11	L33Z
	21B	X06A X06B X06C X07A X07B
52.62↔		BORP KORP MBOR MKOR MVE VAC VAC I VAC II VBOR VKOR
	04	E36A E36B
	06	G12A G16A G38A G38B
	07	H01A H01B H01C H09A H09B H09C H33Z
	11	L33Z
	21B	X06A X06B X06C X07A X07B
52.63↔		BORP KORP MBOR MKOR MVE VAC VAC I VAC II VBOR VKOR
	04	E36A E36B
	06	G12A G16A G38A G38B
	07	H01A H01B H01C H09A H09B H09C H33Z
	11	L33Z
	21B	X06A X06B X06C X07A X07B
52.69↔		BORP KORP MBOR MKOR VAC VAC I VAC II VBOR VKOR
	04	E36A E36B
	06	G12A G16A G38A G38B
	07	H01A H01B H01C H09A H09B H09C H33Z
	11	L33Z
	21B	X06A X06B X06C X07A X07B
52.82↔		BORP KORP MBOR MKOR VAC VAC I VAC II VBOR VKOR
	04	E36A E36B
	06	G12A G16A G38A G38B
	07	H01A H01B H01C H09A H09B H09C H33Z
	Prä	A02Z A06A A06B A06C A07A
52.83.00↔		BORP KORP MBOR MKOR VAC VAC I VAC II VBOR VKOR
	04	E36A E36B
	06	G12A G16A G38A G38B
	07	H01A H01B H01C H09A H09B H09C H33Z
	Prä	A02Z A06A A06B A06C A07A
52.83.10↔		BORP KORP MBOR MKOR VAC VAC I VAC II VBOR VKOR
	04	E36A E36B
	06	G12A G16A G38A G38B
	07	H01A H01B H01C H09A H09B H09C H33Z
	Prä	A02Z A06A A06B A06C A07A
52.83.11↔		BORP KORP MBOR MKOR VAC VAC I VAC II VBOR VKOR
	04	E36A E36B
	06	G12A G16A G38A G38B
	07	H01A H01B H01C H09A H09B H09C H33Z
	Prä	A02Z A06A A06B A06C A07A
52.83.99↔		BORP KORP MBOR MKOR VAC VAC I VAC II VBOR VKOR
	04	E36A E36B
	06	G12A G16A G38A G38B
	07	H01A H01B H01C H09A H09B H09C H33Z
	Prä	A02Z A06A A06B A06C A07A
52.84↔		BORP MBOR VAC VAC I VAC II VBOR
	04	E36A E36B
	06	G12A G16A G38A G38B
	Prä	A01Z A06A A06B A06C A07A
52.85↔		BORP MBOR VAC VAC I VAC II VBOR
	04	E36A E36B
	06	G12A G16A G38A G38B
	Prä	A01Z A06A A06B A06C A07A
52.86↔		BORP MBOR VAC VAC I VAC II VBOR
	04	E36A E36B
	06	G12A G16A G38A G38B
	Prä	A01Z A06A A06B A06C A07A
52.93.10‡↔	01	B60A
	04	E71B E75A E77A
	07	H41A H41B H41C H41D H86A
52.93.20‡↔	01	B60A
	04	E71B E75A E77A
	07	H41A H41B H41C H41D H86A
52.93.30‡↔	01	B60A
	04	E71B E75A E77A
	07	H41A H41B H41C H41D H86A
52.94‡↔	01	B60A
	04	E71B E75A E77A
	07	H41A H41B H41C H41D H86A
52.95.10↔		BORP MBOR VAC VAC I VAC II VBOR
	04	E36A E36B
	06	G10Z G12A G12B G16A G33Z G38A G38B G38C
	07	H01A H01B H01C H09A H09B H09C H33Z
	10	K09A K09B
	11	L33Z
	21B	X06A X06B X06C
52.95.11↔		BORP MBOR VAC VAC I VAC II VBOR
	04	E36A E36B
	06	G10Z G12A G12B G16A G33Z G38A G38B G38C
	07	H01A H01B H01C H09A H09B H09C H33Z
	10	K09A K09B
	11	L33Z
	21B	X06A X06B X06C
52.95.20↔		BORP MBOR VAC VAC I VAC II VBOR
	04	E36A E36B
	06	G10Z G12A G12B G16A G33Z G38A G38B G38C
	07	H01A H01B H01C H09A H09B H09C H33Z
	10	K09A K09B
	11	L33Z
	21B	X06A X06B X06C
52.95.30↔		BORP MBOR VAC

PROC

PROC

CHOP	MDC	DRG
		VAC I VAC II VBOR
	04	E36A E36B
	06	G10Z G12A G12B G16A G33Z G38A G38B G38C
	07	H01A H01B H01C H09A H09B H09C H33Z
	10	K09A K09B
	11	L33Z
	21B	X06A X06B X06C
52.95.31↔		BORP MBOR VAC VAC I VAC II VBOR
	04	E36A E36B
	06	G10Z G12A G12B G16A G33Z G38A G38B G38C
	07	H01A H01B H01C H09A H09B H09C H33Z
	10	K09A K09B
	11	L33Z
	21B	X06A X06B X06C
52.95.40↔		BORP MBOR VAC VAC I VAC II VBOR
	04	E36A E36B
	06	G10Z G12A G12B G16A G33Z G38A G38B G38C
	07	H01A H01B H01C H09A H09B H09C H33Z
	10	K09A K09B
	11	L33Z
	21B	X06A X06B X06C
52.95.41↔		BORP MBOR VAC VAC I VAC II VBOR
	04	E36A E36B
	06	G10Z G12A G12B G16A G33Z G38A G38B G38C
	07	H01A H01B H01C H09A H09B H09C H33Z
	10	K09A K09B
	11	L33Z
	21B	X06A X06B X06C
52.95.50↔		BORP MBOR VAC VAC I VAC II VBOR
	04	E36A E36B
	06	G10Z G12A G12B G16A G33Z G38A G38B G38C
	07	H01A H01B H01C H09A H09B H09C H33Z
	10	K09A K09B
	11	L33Z
	21B	X06A X06B X06C
52.95.51↔		BORP MBOR VAC VAC I VAC II VBOR
	04	E36A E36B
	06	G10Z G12A G12B G16A G33Z G38A G38B G38C
	07	H01A H01B H01C H09A H09B H09C H33Z
	10	K09A K09B
	11	L33Z
	21B	X06A X06B X06C
52.95.60↔		BORP MBOR VAC VAC I VAC II VBOR
	04	E36A E36B
	06	G10Z G12A G12B G16A G33Z G38A G38B G38C
	07	H01A H01B H01C H09A H09B H09C H33Z
	10	K09A K09B
	11	L33Z
	21B	X06A X06B X06C
52.95.70↔		BORP MBOR VAC VAC I VAC II VBOR
	04	E36A E36B
	06	G10Z G12A G12B G16A G33Z G38A G38B G38C
	07	H01A H01B H01C H09A H09B H09C H33Z
	10	K09A K09B
	11	L33Z
	21B	X06A X06B X06C
52.95.90↔		BORP MBOR VAC VAC I VAC II VBOR
	04	E36A E36B
	06	G10Z G12A G12B G16A G33Z G38A G38B G38C
	07	H01A H01B H01C H09A H09B H09C H33Z
	10	K09A K09B
	11	L33Z
	21B	X06A X06B X06C
52.95.A1↔		BORP MBOR VAC VAC I VAC II VBOR
	04	E36A E36B
	06	G12A G16A G33Z G38A G38B G38C
	07	H01A H01B H01C H09A H09B H09C H33Z
52.95.A2↔		BORP MBOR VAC VAC I VAC II VBOR
	04	E36A E36B
	06	G12A G16A G33Z G38A G38B G38C
	07	H01A H01B H01C H09A H09B H09C H33Z
52.96.00‡↔	01	B60A
	04	E71B E75A E77A
	07	H41A H41B H41C H41D H86A
52.96.09‡↔	01	B60A
	04	E71B E75A E77A
	07	H41A H41B H41C H41D H86A
52.96.11↔		BORP MBOR MVE VAC VAC I VAC II VBOR
	04	E36A E36B
	06	G10Z G12A G16A G33Z G38A G38B G38C
	07	H01A H01B H09A H09B H09C H33Z
	11	L33Z
	21B	X06A X06B X06C X07A X07B
52.96.21↔		BORP MBOR MVE VAC VAC I VAC II VBOR
	04	E36A E36B
	06	G10Z G12A G16A G33Z G38A G38B G38C
	07	H01A H01B H09A H09B H09C H33Z
	11	L33Z
	21B	X06A X06B X06C X07A X07B
52.96.31‡↔	01	B60A
	04	E71B E75A E77A
	06	G46A G46B
	07	H41A H41B H41C H41D H61A H64A H86A
52.97‡↔	01	B60A
	04	E71B E75A E77A
	07	H41A H41B H41C H41D H86A
52.98‡↔	01	B60A
	04	E71B E75A E77A
	07	H41A H41B H41C H41D H86A
52.99.00↔		BORP MBOR VAC VAC I VAC II VBOR
	04	E36A E36B
	06	G10Z G12A G12B G16A G16B G18A G18B G19A G19B G33Z G38A G38B G38C
	07	H01A H01B H01C H09A H09B H09C H33Z
	10	K09A K09B
	11	L33Z
	21B	X06A X06B X06C
52.99.10↔		BORP MBOR VAC VAC I VAC II VBOR
	04	E36A E36B
	06	G10Z G12A G12B G16A G16B G18A G18B G19A G19B G33Z G38A G38B G38C
	07	H01A H01B H01C H09A H09B H09C H33Z
	10	K09A K09B
	11	L33Z
	21B	X06A X06B X06C
52.99.20↔		BORP MBOR VAC VAC I VAC II VBOR
	04	E36A E36B
	06	G10Z G12A G12B G16A G16B G18A G18B G19A G19B G33Z G38A G38B G38C
	07	H01A H01B H01C H09A H09B H09C H33Z
	10	K09A K09B
	11	L33Z

CHOP	MDC	DRG
	21B	X06A X06B X06C
52.99.99↔		BORP MBOR VAC
		VAC I VAC II VBOR
	04	E36A E36B
	06	G10Z G12A G12B
		G16A G16B G18A
		G18B G19A G19B
		G33Z G38A G38B
		G38C
	07	H01A H01B H01C
		H09A H09B H09C
		H33Z
	10	K09A K09B
	11	L33Z
	21B	X06A X06B X06C
53.00↔		BORP MBOR VAC
		VAC I VAC II VBOR
	04	E36A E36B
	05	F21A F21B F21C
	06	G09A G09B G09C
		G09D G09E G09F
		G09G G09H G12A
		G16A G38A G38B
	07	H06Z
	08	I27B
	09	J11A J11B
	12	M04A M04B M04C
	15	P60A P60B P60C
		P60D P66B P66C
		P67A P67B
53.06.11↔		BORP MBOR VAC
		VAC I VAC II VBOR
	04	E36A E36B
	05	F21A F21B F21C
	06	G09A G09B G09C
		G09D G09E G09F
		G09G G09H G12A
		G16A G38A G38B
	07	H06Z
	08	I27B
	09	J11A J11B
	12	M04A M04B M04C
	15	P60A P60B P60C
		P60D P66B P66C
		P67A P67B
53.06.21↔		BORP MBOR VAC
		VAC I VAC II VBOR
	04	E36A E36B
	05	F21A F21B F21C
	06	G09A G09B G09C
		G09D G09E G09F
		G09G G09H G12A
		G16A G38A G38B
	07	H06Z
	08	I27B
	09	J11A J11B
	12	M04A M04B M04C
	15	P60A P60B P60C
		P60D P66B P66C
		P67A P67B
53.07.11↔		BORP MBOR VAC
		VAC I VAC II VBOR
	04	E36A E36B
	05	F21A F21B F21C
	06	G09A G09B G09C
		G09D G09E G09F
		G09G G09H G12A
		G16A G38A G38B
	07	H06Z
	08	I27B
	09	J11A J11B
	12	M04A M04B M04C
	15	P60A P60B P60C
		P60D P66B P66C
		P67A P67B
53.07.21↔		BORP MBOR VAC
		VAC I VAC II VBOR
	04	E36A E36B
	05	F21A F21B F21C
	06	G09A G09B G09C
		G09D G09E G09F
		G09G G09H G12A
		G16A G38A G38B
	07	H06Z
	08	I27B
	09	J11A J11B
	12	M04A M04B M04C
	15	P60A P60B P60C
		P60D P66B P66C
		P67A P67B
53.09↔		BORP MBOR VAC
		VAC I VAC II VBOR
	04	E36A E36B
	05	F21A F21B F21C
	06	G09A G09B G09C
		G09D G09E G09F
		G09G G09H G12A
		G16A G38A G38B
	07	H06Z
	08	I27B
	09	J11A J11B
	12	M04A M04B M04C
	15	P60A P60B P60C
		P60D P66B P66C
		P67A P67B
53.20↔		BORP MBOR VAC
		VAC I VAC II VBOR
	04	E36A E36B
	05	F21A F21B F21C
	06	G09A G09B G09C
		G09D G09E G09F
		G09G G09H G12A
		G16A G38A G38B
	07	H06Z
	08	I27B
	09	J11A J11B
53.22.11↔		BORP MBOR VAC
		VAC I VAC II VBOR
	04	E36A E36B
	05	F21A F21B F21C
	06	G09A G09B G09C
		G09D G09E G09F
		G09G G09H G12A
		G16A G38A G38B
	07	H06Z
	08	I27B
	09	J11A J11B
53.22.21↔		BORP MBOR VAC
		VAC I VAC II VBOR
	04	E36A E36B
	05	F21A F21B F21C
	06	G09A G09B G09C
		G09D G09E G09F
		G09G G09H G12A
		G16A G38A G38B
	07	H06Z
	08	I27B
	09	J11A J11B
53.23.11↔		BORP MBOR VAC
		VAC I VAC II VBOR
	04	E36A E36B
	05	F21A F21B F21C
	06	G09A G09B G09C
		G09D G09E G09F
		G09G G09H G12A
		G16A G38A G38B
	07	H06Z
	08	I27B
	09	J11A J11B
53.23.21↔		BORP MBOR VAC
		VAC I VAC II VBOR
	04	E36A E36B
	05	F21A F21B F21C
	06	G09A G09B G09C
		G09D G09E G09F
		G09G G09H G12A
		G16A G38A G38B
	07	H06Z
	08	I27B
	09	J11A J11B
53.29↔		BORP MBOR VAC
		VAC I VAC II VBOR
	04	E36A E36B
	05	F21A F21B F21C
	06	G09A G09B G09C
		G09D G09E G09F
		G09G G09H G12A
		G16A G38A G38B
	07	H06Z
	08	I27B
	09	J11A J11B
53.40↔		BORP MBOR VAC
		VBOR
	04	E36A E36B
	06	G09A G09B G09C
		G09D G09E G09F
		G09G G09H G12A
		G16A G38A G38B
	08	I27B
	09	J11A J11B
	21B	X06A X06B
53.42.11↔		BORP MBOR VAC
		VBOR
	04	E36A E36B
	06	G09A G09B G09C
		G09D G09E G09F
		G09G G09H G12A
		G16A G38A G38B
	08	I27B
	09	J11A J11B
	21B	X06A X06B
53.42.21↔		BORP MBOR VAC
		VAC I VAC II VBOR
	04	E36A E36B
	06	G09A G09B G09C
		G09D G09E G09F
		G09G G09H G12A
		G16A G38A G38B
	08	I27B
	09	J11A J11B
	21B	X06A X06B
53.43.11↔		BORP MBOR VAC
		VBOR
	04	E36A E36B
	06	G09A G09B G09C
		G09D G09E G09F
		G09G G09H G12A
		G16A G38A G38B
	08	I27B
	09	J11A J11B

PROC

CHOP	MDC	DRG
	21B	X06A X06B
53.43.21↔		BORP MBOR VAC
		VAC I VAC II VBOR
	04	E36A E36B
	06	G09A G09B G09C
		G09D G09E G09F
		G09G G09H G12A
		G16A G38A G38B
	08	I27B
	09	J11A J11B
	21B	X06A X06B
53.49↔		BORP MBOR VAC
		VBOR
	04	E36A E36B
	06	G09A G09B G09C
		G09D G09E G09F
		G09G G09H G12A
		G16A G38A G38B
	08	I27B
	09	J11A J11B
	21B	X06A X06B
53.51.00↔		BORP MBOR VAC
		VBOR
	04	E36A E36B
	06	G09A G09B G09C
		G09D G09E G09F
		G09H G12A G16A
		G38A G38B
	08	I27B
	09	J11A J11B
	21B	X06A X06B X06C
	22	Y02A Y02B Y02C
53.51.09↔		BORP MBOR VAC
		VBOR
	04	E36A E36B
	06	G09A G09B G09C
		G09D G09E G09F
		G09H G12A G16A
		G38A G38B
	08	I27B
	09	J11A J11B
	21B	X06A X06B X06C
	22	Y02A Y02B Y02C
53.51.11↔		BORP MBOR VAC
		VBOR
	04	E36A E36B
	06	G09A G09B G09C
		G09D G09E G09F
		G09H G12A G16A
		G38A G38B
	08	I27B
	09	J11A J11B
	21B	X06A X06B X06C
	22	Y02A Y02B Y02C
53.51.21↔		BORP MBOR VAC
		VBOR
	04	E36A E36B
	06	G09A G09B G09C
		G09D G09E G09F
		G09H G12A G16A
		G38A G38B
	08	I27B
	09	J11A J11B
	21B	X06A X06B X06C
	22	Y02A Y02B Y02C
53.52.11↔		BORP MBOR VAC
		VAC I VAC II VBOR
	04	E36A E36B
	06	G09A G09B G09C
		G09D G09E G09F
		G09H G12A G16A
		G38A G38B
	08	I27B
	09	J11A J11B
	21B	X06A X06B X06C
	22	Y02A Y02B Y02C
53.52.21↔		BORP MBOR VAC
		VAC I VAC II VBOR
	04	E36A E36B
	06	G09A G09B G09C
		G09D G09E G09F
		G09H G12A G16A
		G38A G38B
	08	I27B
	09	J11A J11B
53.58↔		BORP MBOR VAC
		VAC I VAC II VBOR
	04	E36A E36B
	06	G09A G09B G09C
		G09D G09E G09F
		G09H G12A G16A
		G38A G38B
	08	I27B
	09	J11A J11B
53.61.00↔		BORP MBOR VAC
		VAC I VAC II VBOR
	04	E36A E36B
	06	G09A G09B G09C
		G09D G09E G09F
		G09H G12A G16A
		G38A G38B
	08	I27B
	09	J11A J11B
	21B	X06A X06B X06C
	22	Y02A Y02B Y02C
53.61.09↔		BORP MBOR VAC
		VAC I VAC II VBOR
	04	E36A E36B
	06	G09A G09B G09C
		G09D G09E G09F
		G09H G12A G16A
		G38A G38B
	08	I27B
	09	J11A J11B
	21B	X06A X06B X06C
	22	Y02A Y02B Y02C
53.61.11↔		BORP MBOR VAC
		VAC I VAC II VBOR
	04	E36A E36B
	06	G09A G09B G09C
		G09D G09E G09F
		G09H G12A G16A
		G38A G38B
	08	I27B
	09	J11A J11B
	21B	X06A X06B X06C
	22	Y02A Y02B Y02C
53.61.21↔		BORP MBOR VAC
		VAC I VAC II VBOR
	04	E36A E36B
	06	G09A G09B G09C
		G09D G09E G09F
		G09H G12A G16A
		G38A G38B
	08	I27B
	09	J11A J11B
	21B	X06A X06B X06C
	22	Y02A Y02B Y02C
53.62.11↔		BORP MBOR VAC
		VAC I VAC II VBOR
	04	E36A E36B
	06	G09A G09B G09C
		G09D G09E G09F
		G09H G12A G16A
		G38A G38B
	08	I27B
	09	J11A J11B
53.62.21↔		BORP MBOR VAC
		VAC I VAC II VBOR
	04	E36A E36B
	06	G09A G09B G09C
		G09D G09E G09F
		G09H G12A G16A
		G38A G38B
	08	I27B
	09	J11A J11B
53.69↔		BORP MBOR VAC
		VAC I VAC II VBOR
	04	E36A E36B
	06	G09A G09B G09C
		G09D G09E G09F
		G09H G12A G16A
		G38A G38B
	08	I27B
	09	J11A J11B
53.70↔		BORP MBOR VAC
		VAC I VAC II VBOR
	04	E02A E02B E02C
		E36A E36B
	06	G02A G02B G12A
		G16A G16B G18A
		G18B G19A G19B
		G19C G33Z G38A
		G38B G38C
	07	H33Z
	11	L33Z
	15	P02A P02B P02C
	21B	X06A X06B X06C
53.71.11↔		BORP MBOR VAC
		VAC I VAC II VBOR
	04	E02A E02B E02C
		E36A E36B
	06	G02A G02B G12A
		G16A G16B G18A
		G18B G19A G19B
		G19C G33Z G38A
		G38B G38C
	07	H33Z
	11	L33Z
	15	P02A P02B P02C
	21B	X06A X06B X06C
53.71.21↔		BORP MBOR VAC
		VAC I VAC II VBOR
	04	E02A E02B E02C
		E36A E36B
	06	G02A G02B G12A
		G16A G16B G18A
		G18B G19A G19B
		G19C G33Z G38A
		G38B G38C
	07	H33Z
	11	L33Z
	15	P02A P02B P02C
	21B	X06A X06B X06C
53.72.11↔		BORP MBOR VAC
		VAC I VAC II VBOR
	04	E02A E02B E02C
		E36A E36B
	06	G02A G02B G12A
		G16A G16B G18A
		G18B G19A G19B
		G19C G33Z G38A

CHOP	MDC	DRG
		G38B G38C
	07	H33Z
	11	L33Z
	15	P02A P02B P02C
	21B	X06A X06B X06C
53.72.21↔		BORP MBOR VAC
		VAC I VAC II VBOR
	04	E02A E02B E02C
		E36A E36B
	06	G02A G02B G12A
		G16A G16B G18A
		G18B G19A G19B
		G19C G33Z G38A
		G38B G38C
	07	H33Z
	11	L33Z
	15	P02A P02B P02C
	21B	X06A X06B X06C
53.79↔		BORP MBOR VAC
		VAC I VAC II VBOR
	04	E02A E02B E02C
		E36A E36B
	06	G02A G02B G12A
		G16A G16B G18A
		G18B G19A G19B
		G19C G33Z G38A
		G38B G38C
	07	H33Z
	11	L33Z
	15	P02A P02B P02C
	21B	X06A X06B X06C
53.80↔		BORP MBOR VAC
		VAC I VAC II VBOR
	04	E02A E02B E02C
		E36A E36B
	06	G02A G02B G12A
		G16A G16B G18A
		G18B G19A G19B
		G19C G33Z G38A
		G38B G38C
	07	H33Z
	11	L33Z
	21B	X06A X06B X06C
53.81↔		BORP MBOR VAC
		VAC I VAC II VBOR
	04	E02A E02B E02C
		E36A E36B
	06	G12A G16A G16B
		G18A G18B G19A
		G19B G19C G33Z
		G38A G38B G38C
	07	H33Z
	11	L33Z
	21B	X06A X06B X06C
53.82↔		BORP MBOR VAC
		VAC I VAC II VBOR
	04	E01A E01B E02A
		E02B E02C E06A
		E06B E06C E36A
		E36B
	06	G02A G02B G12A
		G16A G16B G18A
		G18B G19A G19B
		G19C G33Z G38A
		G38B G38C
	07	H33Z
	11	L33Z
	21B	X06A X06B X06C
53.83.11↔		BORP MBOR VAC
		VAC I VAC II VBOR
	04	E02A E02B E02C
		E36A E36B
	06	G02A G02B G12A
		G16A G16B G18A
		G18B G19A G19B
		G19C G33Z G38A
		G38B G38C
	07	H33Z
	11	L33Z
	21B	X06A X06B X06C
53.83.21↔		BORP MBOR VAC
		VAC I VAC II VBOR
	04	E02A E02B E02C
		E36A E36B
	06	G02A G02B G12A
		G16A G16B G18A
		G18B G19A G19B
		G19C G33Z G38A
		G38B G38C
	07	H33Z
	11	L33Z
	21B	X06A X06B X06C
53.84.11↔		BORP MBOR VAC
		VAC I VAC II VBOR
	04	E02A E02B E02C
		E36A E36B
	06	G02A G02B G12A
		G16A G16B G18A
		G18B G19A G19B
		G19C G33Z G38A
		G38B G38C
	07	H33Z
	11	L33Z
	21B	X06A X06B X06C
53.84.21↔		BORP MBOR VAC
		VAC I VAC II VBOR
	04	E02A E02B E02C
		E36A E36B
	06	G02A G02B G12A
		G16A G16B G18A
		G18B G19A G19B
		G19C G33Z G38A
		G38B G38C
	07	H33Z
	11	L33Z
	21B	X06A X06B X06C
53.85.11↔		BORP MBOR VAC
		VAC I VAC II VBOR
	04	E02A E02B E02C
		E36A E36B
	06	G02A G02B G12A
		G16A G16B G18A
		G18B G19A G19B
		G19C G33Z G38A
		G38B G38C
	07	H33Z
	11	L33Z
	15	P02A P02B P02C
	21B	X06A X06B X06C
53.85.21↔		BORP MBOR VAC
		VAC I VAC II VBOR
	04	E02A E02B E02C
		E36A E36B
	06	G02A G02B G12A
		G16A G16B G18A
		G18B G19A G19B
		G19C G33Z G38A
		G38B G38C
	07	H33Z
	11	L33Z
	15	P02A P02B P02C
	21B	X06A X06B X06C
53.89↔		BORP MBOR VAC
		VAC I VAC II VBOR
	04	E02A E02B E02C
		E36A E36B
	06	G02A G02B G12A
		G16A G16B G18A
		G18B G19A G19B
		G19C G33Z G38A
		G38B G38C
	07	H33Z
	11	L33Z
	21B	X06A X06B X06C
53.9↔		BORP MBOR VAC
		VBOR
	04	E02A E02B E02C
		E36A E36B
	06	G09A G09B G09C
		G09D G09E G09F
		G09G G09H G12A
		G16A G38A G38B
	08	I27B
54.11↔		BORP MBOR VAC
		VAC I VAC II VBOR
	04	E02A E02B E02C
		E36A E36B
	05	F04Z F13A F13B
		F21A F21B F21C
	06	G12A G12B G16A
		G38A G38B
	07	H05A H05B H33Z
	09	J02A J02B J03A
		J03B J04Z J11A
		J11B
	10	K09A K09B
	11	L09A L09B
	12	M01Z M06Z M09A
		M09B M37Z
	13	N11A N11B N13Z
	14	O02A O02B
	21B	X06A X06B
	22	Y02A Y02B Y02C
54.12.00↔		BORP MBOR VAC
		VAC I VAC II VBOR
	04	E36A E36B
	05	F04Z F13A F13B
		F21A F21B F21C
	06	G12A G12B G16A
		G38A G38B
	07	H05A H05B H06Z
		H33Z
	09	J02A J02B J03A
		J03B J04Z J11A
		J11B
	10	K09A K09B
	11	L09A L09B
	12	M01Z M06Z M09A
		M09B M37Z
	13	N11A N11B
	14	O02A O02B
	21B	X06A X06B
	22	Y02A Y02B Y02C
54.12.11↔		BORP MBOR VAC
		VAC I VAC II VBOR
	04	E36A E36B
	05	F04Z F13A F13B
		F21A F21B F21C
	06	G12A G12B G16A
		G38A G38B

PROC

CHOP	MDC	DRG
	07	H05A H05B H06Z H33Z
	09	J02A J02B J03A J03B J04Z J11A J11B
	10	K09A K09B
	11	L09A L09B
	12	M01Z M06Z M09A M09B M37Z
	13	N11A N11B
	14	O02A O02B
	21B	X06A X06B
	22	Y02A Y02B Y02C
54.12.99↔		BORP MBOR VAC VAC I VAC II VBOR
	04	E36A E36B
	05	F04Z F13A F13B F21A F21B F21C
	06	G12A G12B G16A G38A G38B
	07	H05A H05B H06Z H33Z
	09	J02A J02B J03A J03B J04Z J11A J11B
	10	K09A K09B
	11	L09A L09B
	12	M01Z M06Z M09A M09B M37Z
	13	N11A N11B
	14	O02A O02B
	21B	X06A X06B
	22	Y02A Y02B Y02C
54.13↔		BORP MBOR VAC VAC I VAC II VBOR
	04	E36A E36B
	05	F04Z F13A F13B F21A F21B F21C
	06	G12A G12B G16A G38A G38B
	07	H05A H05B H06Z H33Z
	09	J02A J02B J03A J03B J04Z J11A J11B
	10	K09A K09B
	11	L09A L09B
	12	M01Z
	13	N11A N11B
	14	O02A O02B
	21B	X06A X06B
	22	Y02A Y02B Y02C
54.19↔		BORP MBOR VAC VAC I VAC II VBOR
	04	E36A E36B
	05	F04Z F13A F13B F21A F21B F21C
	06	G12A G12B G16A G38A G38B
	07	H05A H05B H06Z H33Z
	09	J02A J02B J03A J03B J04Z J11A J11B
	10	K09A K09B
	11	L09A L09B
	12	M01Z M06Z M09A M09B M37Z
	13	N11A N11B
	14	O02A O02B
	21B	X06A X06B
	22	Y02A Y02B Y02C
54.21.10↔		BORP MBOR VAC VBOR
	04	E02A E02B E02C E36A E36B
	05	F21A F21B F21C
	06	G12A G12B G16A G38A G38B
	07	H12A H12B
	08	I27A I27B I27C I27D
	09	J02A J02B J03A J03B J04Z J11A J11B
	11	L09A L09B
	12	M06Z M09A M09B M37Z
	13	N11A N11B N13Z N25A N25B
	14	O02A O02B
	21B	X06A X06B
	22	Y02A Y02B Y02C
54.21.20‡↔	01	B60A
	13	N06B
54.21.30↔		BORP MBOR VAC VBOR
	04	E36A E36B
	05	F21A F21B F21C
	06	G12A G12B G16A G38A G38B
	07	H12A H12B
	08	I27A I27B I27C I27D
	09	J02A J02B J03A J03B J04Z J11A J11B
	11	L09A L09B
	13	N11A N11B N25A N25B
	14	O02A O02B
	21B	X06A X06B
	22	Y02A Y02B Y02C
54.21.99↔		BORP MBOR VAC VAC I VAC II VBOR
	04	E36A E36B
	05	F21A F21B F21C
	06	G12A G12B G16A G38A G38B
	07	H12A H12B
	08	I27A I27B I27C I27D
	09	J02A J02B J03A J03B J04Z J11A J11B
	11	L09A L09B
	12	M06Z M09A M09B M37Z
	13	N11A N11B N25A N25B
	14	O02A O02B
	21B	X06A X06B
	22	Y02A Y02B Y02C
54.22.10‡↔		AKBB
	01	B60A
	04	E71B E75A E77A
	07	H41A H41B H41C H41D H86A
	16	Q86A
54.22.20‡↔		AKBB
	01	B60A
	16	Q86A
54.22.99‡↔		AKBB
	01	B60A
	04	E71B E75A E77A
	07	H41A H41B H41C H41D H86A
	16	Q86A
54.23↔	05	F21A F21B F21C
	06	G12A G12B
	07	H12A H12B
	09	J02A J02B J03A J03B J04Z J11A J11B
	10	K09A K09B
	11	L09A L09B
	12	M01Z M09A M09B M37Z
	13	N02A N02B N02C N04C N07A N07B N25A N25B N33Z
	14	O02A O02B
	21B	X06A X06B X06C
54.24‡↔		AKBB
	01	B60A
	16	Q86A
54.25↔		BORP MBOR VAC VAC I VAC II VBOR
	01	B17A B17B
	04	E36A E36B
	06	G12A G12B G16A G38A G38B
	07	H06Z
	13	N11A N11B
	21B	X06A X06B X06C
54.26‡↔		AKBB
	01	B60A
	16	Q86A
54.3X.10↔		BORP MBOR VAC VAC I VAC II VBOR
	04	E36A E36B
	06	G12A G12B G16A G38A G38B
	07	H06Z
	08	I27A I27B I27C I27D
	09	J02A J02B J03A J03B J04Z J11A J11B
	10	K09A K09B
	21B	X06A X06B X06C
54.4X.10↔	06	G12A G12B
	07	H06Z
	10	K09A K09B
	13	N01A N01B N01C N01D N01E N02A N02B N02C N04A N04B N07A N11A N11B N33Z
54.4X.11↔		BORP MBOR VAC VAC I VAC II VBOR
	04	E36A E36B
	06	G12A G12B G16A G38A G38B
	07	H06Z
	10	K09A K09B
	13	N01A N01B N01C N01D N02A N02B N02C N04A N04B N07A N11A N33Z

CHOP	MDC	DRG
54.4X.12↔		BORP MBOR VAC VAC I VAC II VBOR
	04	E36A E36B
	06	G12A G12B G16A G38A G38B
	07	H06Z
	10	K09A K09B
	13	N01A N01B N01C N01D N02A N02B N02C N04A N04B N07A N11A N33Z
54.4X.99↔		BORP MBOR VAC VBOR
	04	E36A E36B
	06	G12A G12B G16A G38A G38B
	07	H06Z
	10	K09A K09B
	11	L09A L09B
	13	N01A N01B N01C N01D N01E N02A N02B N02C N11A N11B N33Z
54.51↔		BORP MBOR VAC VAC I VAC II VBOR
	04	E36A E36B
	06	G12A G16A G21A G21B G21C G38A G38B
	07	H06Z H07C
	11	L03Z L04A L04B L06A L06B L09A L09B L10A L10B L13A L13B L13C L20A L20B L20C L20D L20E L38Z
	12	M04A M04B M04C M06Z M09A M09B M37Z
	13	N02A N02B N02C N04A N04B N04C N06B N33Z
	21B	X06A X06B X06C
54.52↔		BORP VAC I VAC II
	04	E36A E36B
	06	G16A G21A G21B G21C G38A G38B
	07	H06Z H07C
	11	L03Z L04A L04B L06A L06B L09A L09B L10A L10B L13A L13B L13C L20A L20B L20C L20D L20E L38Z
	12	M04A M04B M04C M06Z M09A M09B M37Z
	13	N02A N02B N02C N04A N04B N04C N06B N33Z
	21B	X06A X06B X06C
54.59↔		BORP VAC I VAC II
	04	E36A E36B
	06	G16A G21A G21B G21C G38A G38B
	07	H06Z H07C
	11	L03Z L04A L04B L06A L06B L09A L09B L10A L10B L13A L13B L13C L20A L20B L20C L20D L20E L38Z
	12	M04A M04B M04C M06Z M09A M09B M37Z
	13	N02A N02B N02C N04A N04B N04C N06B N33Z
	21B	X06A X06B X06C
54.62↔		BORP MBOR VAC VBOR
	04	E36A E36B
	05	F04Z F13A F13B
	06	G02A G02B G12A G12B G16A G38A G38B G38C
	07	H06Z
	09	J02A J02B J03A J03B J04Z J11A J11B
	13	N11A N11B
	21B	X06A X06B X06C
	22	Y02A Y02B Y02C
54.65↔	06	G12A G12B
	07	H06Z
	09	J02A J02B J03A J03B J04Z J11A J11B
	13	N11A N11B
	21B	X06A X06B X06C
54.66↔	06	G12A G12B
	07	H06Z
	09	J02A J02B J03A J03B J04Z J11A J11B
	13	N11A N11B
	21B	X06A X06B X06C
54.67↔	06	G02A G02B G09A G09B G09C G09D G09E G09F G09G G09H G12A G12B G38A G38B G38C
	07	H06Z
	08	I27B
	09	J02A J02B J03A J03B J04Z J11A J11B
	21B	X06A X06B
54.68↔	06	G09A G09B G09C G09D G09E G09F G09G G09H G12A G12B
	07	H06Z
	08	I27B
	09	J02A J02B J03A J03B J04Z J11A J11B
	21B	X06A X06B
54.69↔	06	G12A G12B
	07	H06Z
	09	J02A J02B J03A J03B J04Z J11A J11B
	13	N11A N11B
	21B	X06A X06B X06C
54.71.00↔		BORP MBOR VAC VAC I VAC II VBOR
	04	E36A E36B
	06	G09A G09B G09C G09D G09E G09F G09H G12A G16A G38A G38B
	08	I27B
	09	J11A J11B
	21B	X06A X06B X06C
54.71.10↔		BORP MBOR VAC VAC I VAC II VBOR
	04	E36A E36B
	06	G02A G02B G09A G09B G09C G09D G09E G09F G09H G12A G16A G38A G38B G38C
	08	I27B
	09	J11A J11B
	21B	X06A X06B X06C
54.71.99↔		BORP MBOR VAC VAC I VAC II VBOR
	04	E36A E36B
	06	G09A G09B G09C G09D G09E G09F G09H G12A G16A G38A G38B
	08	I27B
	09	J11A J11B
	21B	X06A X06B X06C
54.73↔		BORP MBOR VAC VAC I VAC II VBOR
	04	E36A E36B
	06	G09A G09B G09C G09D G09E G09F G09G G09H G12A G16A G38A G38B
	07	H06Z
	08	I27B
	09	J02A J02B J03A J03B J04Z J11A J11B
	21B	X06A X06B
54.74↔		BORP MBOR VAC VAC I VAC II VBOR
	04	E36A E36B
	05	F04Z F13A F13B
	06	G12A G12B G16A G16B G18A G38A G38B G38C
	07	H06Z
	10	K09A K09B
	21B	X06A X06B
54.75↔		BORP MBOR VAC VAC I VAC II VBOR
	04	E36A E36B
	06	G09A G09B G09C G09D G09E G09F G09G G09H G12A G16A G38A G38B
	07	H06Z
	08	I27B
	09	J02A J02B J03A J03B J04Z J11A J11B
	11	L09A L09B
	21B	X06A X06B
54.91‡↔	01	B60A
	23	Z65A
54.92↔		BORP MBOR VAC VAC I VAC II VBOR
	04	E36A E36B
	05	F21A F21B F21C
	06	G12A G12B G16A

PROC

PROC

CHOP	MDC	DRG
		G38A G38B
	07	H12A H12B
	11	L09A L09B
	13	N11A N11B
	21B	X06A X06B X06C
54.93‡↔	01	B60A
	06	G70A G70B G70C
	07	H61A H63A H63C H63D H86A
	09	J11A J11B
	11	L02Z
	12	M06Z M09A M09B M37Z
	13	N11A N11B
54.94↔		BORP MBOR VAC VAC I VAC II VBOR
	04	E36A E36B
	06	G12A G12B G16A G33Z G38A G38B G38C
	07	H01A H01B H01C H09A H09B H09C H33Z
	11	L33Z
54.95‡↔	01	B03A B03B B03C B60A
54.98.00‡↔		DIAL
	01	B60A
54.98.09‡↔		DIAL KP KPP
	01	B60A
54.98.11‡↔		DIAL KP KPP
	01	B60A
54.98.21‡↔		DIAL KP KPP
	01	B60A
54.98.22‡↔		DIAL KP KPP
	01	B60A
54.98.23‡↔		DIAL KP KPP
	01	B60A
54.98.24‡↔		DIAL KP KPP
	01	B60A
54.98.25‡↔		DIAL KP KPP
	01	B60A
54.98.26‡↔		DIAL KP KPP
	01	B60A
54.98.31‡↔		DIAL KP KPP
	01	B60A
54.98.32‡↔		DIAL KP KPP
	01	B60A
54.98.33‡↔		DIAL KP KPP
	01	B60A
54.98.34‡↔		DIAL KP KPP
	01	B60A
54.98.35‡↔		DIAL KP KPP
	01	B60A
54.98.36‡↔		DIAL KP KPP
	01	B60A
54.99.31↔		BORP KORP MBOR MKOR VAC VAC I VAC II VBOR VKOR
	04	E02A E02B E02C E36A E36B
	05	F04Z F13A F13B F21A F21B F21C
	06	G12A G12B G16A G38A G38B
	07	H06Z
	09	J02A J02B J03A J03B J04Z J11A J11B
	10	K09A K09B
	11	L03Z L04A L04B L09A L09B L10A L10B L13A L13B L13C L38Z
	12	M06Z M09A M09B M37Z
	13	N01A N01B N01C N01D N11A N11B N33Z
	21B	X06A X06B
	22	Y02A Y02B Y02C
54.99.40↔		BORP MBOR VAC VAC I VAC II VBOR
	04	E02A E02B E02C E36A E36B
	05	F04Z F13A F13B F21A F21B F21C
	06	G12A G12B G16A G38A G38B
	07	H06Z
	09	J02A J02B J03A J03B J04Z J11A J11B
	10	K09A K09B
	11	L03Z L04A L04B L09A L09B L10A L10B L13A L13B L13C L38Z
	12	M06Z M09A M09B M37Z
	13	N11A N11B
	21B	X06A X06B
	22	Y02A Y02B Y02C
54.99.50↔		BORP MBOR VAC VAC I VAC II VBOR
	04	E02A E02B E02C E36A E36B
	05	F04Z F13A F13B F21A F21B F21C
	06	G12A G12B G16A G38A G38B
	07	H06Z
	09	J02A J02B J03A J03B J04Z J11A J11B
	10	K09A K09B
	11	L03Z L04A L04B L09A L09B L10A L10B L13A L13B L13C L38Z
	12	M06Z M09A M09B M37Z
	13	N01D N11A
	21B	X06A X06B
	22	Y02A Y02B Y02C
54.99.51↔		BORP MBOR VAC VAC I VAC II VBOR
	04	E02A E02B E02C E36A E36B
	05	F04Z F13A F13B F21A F21B F21C
	06	G12A G12B G16A G38A G38B
	07	H06Z
	09	J02A J02B J03A J03B J04Z J11A J11B
	10	K09A K09B
	11	L03Z L04A L04B L09A L09B L10A L10B L13A L13B L13C L38Z
	12	M06Z M09A M09B M37Z
	13	N01D N11A
	21B	X06A X06B
	22	Y02A Y02B Y02C
54.99.60↔		BORP MBOR VAC VBOR
	04	E02A E02B E02C E36A E36B
	05	F04Z F13A F13B F21A F21B F21C
	06	G12A G12B G16A G38A G38B
	07	H06Z
	08	I27A I27B I27C I27D
	09	J02A J02B J03A J03B J04Z J11A J11B
	10	K09A K09B
	11	L03Z L04A L04B L09A L09B L10A L10B L13A L13B L13C L38Z
	12	M06Z M09A M09B M37Z
	13	N11A N11B
	21B	X06A X06B
	22	Y02A Y02B Y02C
54.99.61↔		BORP MBOR VAC VBOR
	04	E02A E02B E02C E36A E36B
	05	F04Z F13A F13B F21A F21B F21C
	06	G12A G12B G16A G38A G38B
	07	H06Z
	09	J02A J02B J03A J03B J04Z J11A J11B
	10	K09A K09B
	11	L03Z L04A L04B L09A L09B L10A L10B L13A L13B L13C L38Z
	12	M06Z M09A M09B M37Z
	13	N11A N11B
	21B	X06A X06B
	22	Y02A Y02B Y02C
54.99.80↔	01	B21A B21B B22Z
54.99.81↔		BORP MBOR VAC VAC I VAC II VBOR
	04	E02A E02B E02C E36A E36B
	05	F04Z F13A F13B F21A F21B F21C
	06	G12A G12B G16A G38A G38B
	07	H06Z
	09	J02A J02B J03A J03B J04Z J11A J11B
	10	K09A K09B
	11	L03Z L04A L04B L09A L09B L10A L10B L13A L13B

CHOP	MDC	DRG
		L13C L38Z
	12	M06Z M09A M09B
		M37Z
	13	N11A N11B
	21B	X06A X06B
	22	Y02A Y02B Y02C
54.99.82↔		BORP MBOR VAC
		VAC I VAC II VBOR
	04	E02A E02B E02C
		E36A E36B
	05	F04Z F13A F13B
		F21A F21B F21C
	06	G12A G12B G16A
		G38A G38B
	07	H06Z
	09	J02A J02B J03A
		J03B J04Z J11A
		J11B
	10	K09A K09B
	11	L03Z L04A L04B
		L09A L09B L10A
		L10B L13A L13B
		L13C L38Z
	12	M06Z M09A M09B
		M37Z
	13	N11A N11B
	21B	X06A X06B
	22	Y02A Y02B Y02C
54.99.83↔	01	B21A B21B B22Z
54.99.84↔		BORP MBOR VAC
		VAC I VAC II VBOR
	04	E02A E02B E02C
		E36A E36B
	05	F04Z F13A F13B
		F21A F21B F21C
	06	G12A G12B G16A
		G38A G38B
	07	H06Z
	09	J02A J02B J03A
		J03B J04Z J11A
		J11B
	10	K09A K09B
	11	L03Z L04A L04B
		L09A L09B L10A
		L10B L13A L13B
		L13C L38Z
	12	M06Z M09A M09B
		M37Z
	13	N11A N11B
	21B	X06A X06B
	22	Y02A Y02B Y02C
54.A1↔		BORP MBOR VAC
		VBOR
	04	E02A E02B E02C
		E36A E36B
	05	F04Z F13A F13B
		F21A F21B F21C
	06	G12A G12B G16A
		G38A G38B
	07	H06Z
	09	J02A J02B J03A
		J03B J04Z J11A
		J11B
	10	K09A K09B
	11	L03Z L04A L04B
		L09A L09B L10A
		L10B L13A L13B
		L13C L38Z
	12	M06Z M09A M09B
		M37Z

CHOP	MDC	DRG
	13	N11A N11B
	21B	X06A X06B
	22	Y02A Y02B Y02C
55.01.00‡↔	01	B60A
	04	E71B E75A E77A
	11	L40Z L42A L60A
		L60C L63A L64A
		L68A L70B
55.01.10‡↔	01	B60A
	04	E71B E75A E77A
	11	L40Z L42A L60A
		L60C L63A L64A
		L68A L70B
55.01.11↔		BORP MBOR VAC
		VAC I VAC II VBOR
	04	E36A E36B
	06	G12A G16A G38A
		G38B
	08	I28A I28B
	11	L03Z L04A L04B
		L10A L10B L13A
		L13B L13C L38Z
55.01.12↔		BORP MBOR VAC
		VAC I VAC II VBOR
	04	E36A E36B
	06	G12A G16A G38A
		G38B
	08	I28A I28B
	11	L03Z L04A L04B
		L10A L10B L13A
		L13B L13C L38Z
55.01.13↔		BORP MBOR VAC
		VAC I VAC II VBOR
	04	E36A E36B
	06	G12A G16A G38A
		G38B
	08	I28A I28B
	11	L03Z L04A L04B
		L10A L10B L13A
		L13B L13C L38Z
55.01.99‡↔	01	B60A
	04	E71B E75A E77A
	11	L40Z L42A L60A
		L60C L63A L64A
		L68A L70B
55.02.10‡↔	01	B60A
	11	L13A L13B L13C
		L18A L18B L38Z
		L42A L60A L60C
		L63A L70B
	15	P67A P67B
55.02.11↔		BORP MBOR VAC
		VAC I VAC II VBOR
	04	E36A E36B
	06	G12A G16A G38A
		G38B
	11	L03Z L04A L04B
		L10A L10B L13A
		L13B L13C L38Z
	21B	X06A X06B X06C
55.02.99‡↔	01	B60A
	11	L13A L13B L13C
		L18A L18B L38Z
		L42A L60A L60C
		L63A L70B
55.03.10‡↔	01	B60A
	11	L13A L13B L13C
		L18A L18B L38Z
		L42A L60A L60C
		L63A L70B

CHOP	MDC	DRG
55.03.11‡↔	01	B60A
	11	L13A L13B L13C
		L18A L18B L38Z
		L42A L60A L60C
		L63A L70B
55.03.99‡↔	01	B60A
	11	L13A L13B L13C
		L18A L18B L38Z
		L42A L60A L60C
		L63A L70B
55.04.10‡↔	01	B60A
	11	L13A L13B L13C
		L18A L18B L38Z
55.04.11‡↔	01	B60A
	11	L13A L13B L13C
		L18A L18B L38Z
55.04.99‡↔	01	B60A
	11	L13A L13B L13C
		L18A L18B L38Z
55.05‡↔	01	B60A
	11	L13A L13B L13C
		L18A L18B L38Z
		L42A L60A L60C
		L63A L70B
55.11‡↔	01	B60A
	04	E71B E75A E77A
	11	L40Z L42A L60A
		L60C L63A L64A
		L68A L70B
55.12‡↔	01	B60A
	11	L13A L13B L13C
		L18A L18B L38Z
		L42A L60A L60C
		L63A L70B
55.21‡↔	01	B60A
	04	E71B E75A E77A
	11	L13A L13B L13C
		L38Z L40Z L63A
		L63B L64A L68A
55.22‡↔	01	B60A
	04	E71B E75A E77A
	11	L13A L13B L13C
		L38Z L40Z L63A
		L63B L64A L68A
55.23‡↔		AKBB
	01	B60A
	08	I66A
	11	L42A L60A L60C
		L63A L70B
	16	Q86A
55.24↔		BORP MBOR VAC
		VAC I VAC II VBOR
	04	E36A E36B
	06	G12A G16A G38A
		G38B
	08	I28A I28B
	11	L03Z L04A L04B
		L10A L10B L13A
		L13B L13C L38Z
55.25‡↔		AKBB
	01	B60A
	11	L42A L60A L60C
		L63A L70B
	16	Q86A
55.31↔		BORP MBOR VAC
		VAC I VAC II VBOR
	04	E36A E36B
	06	G12A G16A G38A
		G38B
	11	L03Z L04A L04B

PROC

PROC

CHOP	MDC	DRG
		L10A L10B L13A L13B L13C L38Z
	21B	X06A X06B X06C
55.3A.11↔		BORP MBOR VAC VAC I VAC II VBOR
	04	E36A E36B
	06	G12A G16A G38A G38B
	11	L03Z L04A L04B L10A L10B L13A L13B L13C L38Z
	21B	X06A X06B X06C
55.3A.12↔		BORP MBOR VAC VAC I VAC II VBOR
	04	E36A E36B
	06	G12A G16A G38A G38B
	11	L03Z L04A L04B L10A L10B L13A L13B L13C L38Z
	21B	X06A X06B X06C
55.3A.13↔		BORP MBOR VAC VBOR
	04	E36A E36B
	06	G12A G16A G38A G38B
	11	L03Z L04A L04B L10A L10B L13A L13B L13C L38Z
	21B	X06A X06B X06C
55.3A.14‡↔	01	B60A
	11	L20A L20B L20C L20D L20E
55.3Y↔		BORP MBOR VAC VBOR
	04	E36A E36B
	06	G12A G16A G38A G38B
	11	L03Z L04A L04B L10A L10B L13A L13B L13C L38Z
	21B	X06A X06B X06C
55.4↔		BORP MBOR VAC VAC I VAC II VBOR
	04	E36A E36B
	06	G12A G16A G16B G18A G38A G38B G38C
	11	L03Z L04A L04B L10A L10B L13A L13B L38Z
	14	O01B O02A O02B
	21B	X06A X06B X06C
55.51.00↔		BORP MBOR VAC VAC I VAC II VBOR
	04	E36A E36B
	06	G12A G16A G16B G18A G38A G38B G38C
	07	H01B H33Z
	11	L03Z L04A L04B L10A L10B L13A L13B L13C L38Z
	14	O01B O02A O02B
	21B	X06A X06B X06C
55.51.01↔		BORP MBOR MVE VAC VAC I VAC II VBOR
	04	E36A E36B
	06	G12A G16A G16B G18A G38A G38B G38C
	07	H01B H33Z
	11	L03Z L04A L04B L10A L10B L13A L13B L38Z
	14	O01B O02A O02B
	21B	X06A X06B X06C
55.51.02↔		BORP MBOR VAC VAC I VAC II VBOR
	04	E36A E36B
	06	G12A G16A G38A G38B
	11	L03Z L04A L04B L10A L10B L13A L13B L13C L38Z
	21B	X06A X06B X06C
	23	Z02Z
55.51.99↔		BORP MBOR MVE VAC VAC I VAC II VBOR
	04	E36A E36B
	06	G12A G16A G16B G18A G38A G38B G38C
	07	H01B H33Z
	11	L03Z L04A L04B L10A L10B L13A L13B L38Z
	14	O01B O02A O02B
	21B	X06A X06B X06C
55.52↔		BORP MBOR MVE VAC VAC I VAC II VBOR
	04	E36A E36B
	06	G12A G16A G16B G18A G38A G38B G38C
	11	L03Z L04A L04B L10A L10B L13A L13B L13C L38Z
	21B	X06A X06B X06C
55.53↔		BORP MBOR MVE VAC VAC I VAC II VBOR
	04	E36A E36B
	06	G12A G16A G16B G18A G38A G38B G38C
	11	L03Z L04A L04B L10A L10B L13A L13B L13C L38Z
	21B	X06A X06B X06C
55.54↔		BORP MBOR MVE VAC VAC I VAC II VBOR
	04	E36A E36B
	06	G12A G16A G16B G18A G38A G38B G38C
	11	L03Z L04A L04B L10A L10B L13A L13B L13C L38Z
	14	O01B O02A O02B
	21B	X06A X06B X06C
55.61↔		BORP KORP MBOR MKOR VAC VAC I VAC II VBOR VKOR
	04	E36A E36B
	06	G12A G16A G38A G38B
	11	L03Z L04A L04B L10A L10B L13A L13B L13C L38Z
	21B	X06A X06B X06C
55.69.00↔		BORP KORP MBOR MKOR VAC VAC I VAC II VBOR VKOR
	04	E36A E36B
	06	G12A G16A G38A G38B
	Prä	A06A A06B A06C A07A A07B A07C A11A A17Z
55.69.10↔		BORP KORP MBOR MKOR VAC VAC I VAC II VBOR VKOR
	04	E36A E36B
	06	G12A G16A G38A G38B
	Prä	A06A A06B A06C A07A A07B A07C A11A A17Z
55.69.20↔		BORP KORP MBOR MKOR VAC VAC I VAC II VBOR VKOR
	04	E36A E36B
	06	G12A G16A G38A G38B
	Prä	A06A A06B A06C A07A A07B A07C A11A A17Z
55.69.30↔		BORP KORP MBOR MKOR VAC VAC I VAC II VBOR VKOR
	04	E36A E36B
	06	G12A G16A G38A G38B
	Prä	A06A A06B A06C A07A A07B A07C A11A A17Z
55.69.40↔		BORP KORP MBOR MKOR VAC VAC I VAC II VBOR VKOR
	04	E36A E36B
	06	G12A G16A G38A G38B
	Prä	A06A A06B A06C A07A A07B A07C A11A A17Z
55.69.99↔		BORP KORP MBOR MKOR VAC VAC I VAC II VBOR VKOR
	04	E36A E36B
	06	G12A G16A G38A G38B
	Prä	A06A A06B A06C A07A A07B A07C A11A A17Z
55.7↔		BORP MBOR VAC VAC I VAC II VBOR
	04	E36A E36B
	06	G12A G16A G38A G38B
	11	L03Z L04A L04B L10A L10B L13A L13B L13C L38Z
	21B	X06A X06B X06C
55.81↔		BORP MBOR VAC VAC I VAC II VBOR

CHOP	MDC	DRG
	04	E36A E36B
	06	G12A G16A G38A G38B
	08	I28A I28B
	11	L03Z L04A L04B L10A L10B L13A L13B L13C L38Z
	21B	X06A X06B X06C
55.82↔		BORP MBOR VAC VAC I VAC II VBOR
	04	E36A E36B
	06	G12A G16A G38A G38B
	11	L03Z L04A L04B L10A L10B L13A L13B L13C L38Z
	21B	X06A X06B X06C
55.83↔		BORP MBOR VAC VAC I VAC II VBOR
	04	E36A E36B
	06	G12A G16A G38A G38B
	11	L03Z L04A L04B L10A L10B L13A L13B L13C L38Z
	21B	X06A X06B X06C
55.84↔		BORP MBOR VAC VAC I VAC II VBOR
	04	E36A E36B
	06	G12A G16A G38A G38B
	08	I28A I28B
	11	L03Z L04A L04B L10A L10B L13A L13B L13C L38Z
55.85↔		BORP MBOR VAC VAC I VAC II VBOR
	04	E36A E36B
	06	G12A G16A G38A G38B
	11	L03Z L04A L04B L10A L10B L13A L13B L13C L38Z
	21B	X06A X06B X06C
55.86↔		BORP MBOR VAC VAC I VAC II VBOR
	04	E36A E36B
	06	G12A G16A G38A G38B
	11	L03Z L04A L04B L10A L10B L13A L13B L13C L38Z
	21B	X06A X06B X06C
55.87↔		BORP MBOR VAC VAC I VAC II VBOR
	04	E36A E36B
	06	G12A G16A G38A G38B
	11	L03Z L04A L04B L10A L10B L13A L13B L13C L38Z
	21B	X06A X06B X06C
55.89↔		BORP MBOR VAC VAC I VAC II VBOR
	04	E36A E36B
	06	G12A G16A G38A G38B
	11	L03Z L04A L04B L10A L10B L13A L13B L13C L38Z
	21B	X06A X06B X06C
55.91↔		BORP MBOR VAC VAC I VAC II VBOR
	04	E36A E36B
	06	G12A G16A G38A G38B
	11	L03Z L04A L04B L10A L10B L13A L13B L13C L38Z
	21B	X06A X06B X06C
55.92‡↔	01	B60A
	04	E71B E75A E77A
	11	L40Z L42A L60A L60C L63A L64A L68A L70B
55.93‡↔	01	B60A
	11	L42A L60A L60C L63A L70B
55.94‡↔	01	B60A
	11	L42A L60A L60C L63A L70B
55.96↔	11	L06A L06B
	21B	X06A X06B X06C
55.99.10↔		BORP MBOR VAC VAC I VAC II VBOR
	04	E36A E36B
	06	G12A G16A G38A G38B
	11	L03Z L04A L04B L10A L10B L13A L13B L13C L38Z
	21B	X06A X06B X06C
56.0X.00↔	11	L20A L20B L20C L20D L20E
	21B	X06A X06B X06C
56.0X.10↔	06	G12A G12B
	10	K09A K09B
	11	L20A L20B L20C L20D L20E
	21B	X06A X06B X06C
56.0X.11↔	06	G12A G12B
	10	K09A K09B
	11	L20A L20B L20C L20D L20E
	21B	X06A X06B X06C
56.0X.99↔	06	G12A G12B
	10	K09A K09B
	11	L20A L20B L20C L20D L20E
	21B	X06A X06B X06C
56.1X.00↔	11	L03Z L04A L04B L10A L10B L13A L13B L13C L38Z
	21B	X06A X06B X06C
56.1X.10↔	11	L03Z L04A L04B L10A L10B L13A L13B L13C L38Z
	21B	X06A X06B X06C
56.1X.11↔	11	L03Z L04A L04B L10A L10B L13A L13B L13C L38Z
	21B	X06A X06B X06C
56.1X.12↔	11	L03Z L04A L04B L10A L10B L13A L13B L13C L38Z
	21B	X06A X06B X06C
56.1X.99↔	11	L03Z L04A L04B L10A L10B L13A L13B L13C L38Z
	21B	X06A X06B X06C
56.2X.00↔		BORP MBOR VAC VAC I VAC II VBOR
	04	E36A E36B
	06	G12A G16A G38A G38B
	11	L03Z L04A L04B L10A L10B L13A L13B L13C L38Z
	21B	X06A X06B X06C
56.2X.10↔		BORP MBOR VAC VBOR
	04	E36A E36B
	06	G12A G16A G38A G38B
	11	L03Z L04A L04B L10A L10B L13A L13B L13C L38Z
	21B	X06A X06B X06C
56.2X.11↔		BORP MBOR VAC VBOR
	04	E36A E36B
	06	G12A G16A G38A G38B
	11	L03Z L04A L04B L10A L10B L13A L13B L13C L38Z
	21B	X06A X06B X06C
56.2X.20↔		BORP MBOR VAC VBOR
	04	E36A E36B
	06	G12A G16A G38A G38B
	11	L03Z L04A L04B L10A L10B L13A L13B L13C L38Z
	21B	X06A X06B X06C
56.2X.30↔		BORP MBOR VAC VAC I VAC II VBOR
	04	E36A E36B
	06	G12A G16A G38A G38B
	11	L03Z L04A L04B L10A L10B L13A L13B L13C L38Z
	21B	X06A X06B X06C
56.2X.40↔		BORP MBOR VAC VAC I VAC II VBOR
	04	E36A E36B
	06	G12A G16A G38A G38B
	11	L03Z L04A L04B L10A L10B L13A L13B L13C L38Z
	21B	X06A X06B X06C
56.2X.99↔		BORP MBOR VAC VBOR
	04	E36A E36B
	06	G12A G16A G38A G38B
	11	L03Z L04A L04B L10A L10B L13A L13B L13C L38Z
	21B	X06A X06B X06C
56.31‡↔	01	B60A
	04	E71B E75A E77A
	11	L40Z L63A L63B L64A L68A
56.32‡↔		AKBB
	01	B60A
	16	Q86A

PROC

PROC

CHOP	MDC	DRG
56.33‡↔		AKBB
	01	B60A
	11	L20A L20B L20C L20D L20E
	16	Q86A
56.34↔	11	L03Z L04A L04B L10A L10B L13A L13B L13C L38Z
56.40↔		BORP MBOR VAC VAC I VAC II VBOR
	04	E36A E36B
	06	G12A G16A G38A G38B
	11	L03Z L04A L04B L10A L10B L13A L13B L13C L38Z
	21B	X06A X06B X06C
56.41.00↔		BORP MBOR VAC VAC I VAC II VBOR
	04	E36A E36B
	06	G12A G16A G38A G38B
	11	L03Z L04A L04B L10A L10B L13A L13B L13C L38Z
	12	M06Z M09A M09B M37Z
	13	N08Z N11A N11B
	21B	X06A X06B X06C
56.41.10↔		BORP MBOR VAC VAC I VAC II VBOR
	04	E36A E36B
	06	G12A G16A G38A G38B
	11	L03Z L04A L04B L10A L10B L13A L13B L13C L38Z
	12	M06Z M09A M09B M37Z
	13	N08Z N11A N11B
	21B	X06A X06B X06C
56.41.11↔		BORP MBOR VAC VAC I VAC II VBOR
	04	E36A E36B
	06	G12A G16A G38A G38B
	11	L03Z L04A L04B L10A L10B L13A L13B L13C L38Z
	12	M06Z M09A M09B M37Z
	13	N08Z N11A N11B
	21B	X06A X06B X06C
56.41.12↔		BORP MBOR VAC VAC I VAC II VBOR
	04	E36A E36B
	06	G12A G16A G38A G38B
	11	L03Z L04A L04B L10A L10B L13A L13B L13C L38Z
	12	M06Z M09A M09B M37Z
	13	N08Z N11A N11B
	21B	X06A X06B X06C
56.41.20↔		BORP MBOR VAC VAC I VAC II VBOR
	04	E36A E36B
	06	G12A G16A G38A G38B
	11	L03Z L04A L04B L10A L10B L13A L13B L13C L38Z
	12	M06Z M09A M09B M37Z
	13	N08Z N11A N11B
	21B	X06A X06B X06C
56.41.21↔		BORP MBOR VAC VAC I VAC II VBOR
	04	E36A E36B
	06	G12A G16A G38A G38B
	11	L03Z L04A L04B L10A L10B L13A L13B L13C L38Z
	12	M06Z M09A M09B M37Z
	13	N08Z N11A N11B
	21B	X06A X06B X06C
56.41.30↔		BORP MBOR VAC VAC I VAC II VBOR
	04	E36A E36B
	06	G12A G16A G38A G38B
	11	L03Z L04A L04B L10A L10B L13A L13B L13C L38Z
	12	M06Z M09A M09B M37Z
	13	N08Z N11A N11B
	21B	X06A X06B X06C
56.41.40↔		BORP MBOR VAC VAC I VAC II VBOR
	04	E36A E36B
	06	G12A G16A G38A G38B
	11	L03Z L04A L04B L10A L10B L13A L13B L13C L38Z
	12	M06Z M09A M09B M37Z
	13	N08Z N11A N11B
	21B	X06A X06B X06C
56.41.41↔		BORP MBOR VAC VAC I VAC II VBOR
	04	E36A E36B
	06	G12A G16A G38A G38B
	11	L03Z L04A L04B L10A L10B L13A L13B L13C L38Z
	12	M06Z M09A M09B M37Z
	13	N08Z N11A N11B
	21B	X06A X06B X06C
56.41.49↔		BORP MBOR VAC VAC I VAC II VBOR
	04	E36A E36B
	06	G12A G16A G38A G38B
	11	L03Z L04A L04B L10A L10B L13A L13B L13C L38Z
	12	M06Z M09A M09B M37Z
	13	N08Z N11A N11B
	21B	X06A X06B X06C
56.41.99↔		BORP MBOR VAC VAC I VAC II VBOR
	04	E36A E36B
	06	G12A G16A G38A G38B
	11	L03Z L04A L04B L10A L10B L13A L13B L13C L38Z
	12	M06Z M09A M09B M37Z
	13	N08Z N11A N11B
	21B	X06A X06B X06C
56.42↔		BORP MBOR VAC VAC I VAC II VBOR
	04	E36A E36B
	06	G12A G16A G38A G38B
	11	L03Z L04A L04B L10A L10B L13A L13B L13C L38Z
	21B	X06A X06B X06C
56.51.00↔	01	B03A B03B B03C
	06	G16A G16B G18A G38A G38B G38C
	11	L03Z L04A L04B L10A L10B L13A L13B L13C L33Z L38Z
	12	M06Z M09A M09B M37Z
	13	N01A N01B N01C N01D N08Z N11A N33Z N34Z
	21B	X06A X06B X06C
56.51.10↔		BORP KORP MBOR MKOR MVE VAC VAC I VAC II VBOR VKOR
	01	B03A B03B B03C
	04	E36A E36B
	06	G12A G16A G16B G18A G38A G38B G38C
	11	L03Z L04A L04B L10A L10B L13A L13B L13C L33Z L38Z
	12	M06Z M09A M09B M37Z
	13	N01A N01B N01C N01D N08Z N11A N33Z N34Z
	21B	X06A X06B X06C
56.51.11↔		BORP KORP MBOR MKOR MVE VAC VAC I VAC II VBOR VKOR
	01	B03A B03B B03C
	04	E36A E36B
	06	G12A G16A G16B G18A G38A G38B G38C
	11	L03Z L04A L04B L10A L10B L13A L13B L13C L33Z L38Z
	12	M06Z M09A M09B M37Z
	13	N01A N01B N01C N01D N08Z N11A N33Z N34Z
	21B	X06A X06B X06C
56.51.12↔		BORP KORP MBOR

CHOP	MDC	DRG
		MKOR MVE VAC VAC I VAC II VBOR VKOR
	01	B03A B03B B03C
	04	E36A E36B
	06	G12A G16A G16B G18A G38A G38B G38C
	11	L03Z L04A L04B L10A L10B L13A L13B L13C L33Z L38Z
	12	M06Z M09A M09B M37Z
	13	N01A N01B N01C N01D N08Z N11A N33Z N34Z
	21B	X06A X06B X06C
56.51.20↔		BORP KORP MBOR MKOR MVE VAC VAC I VAC II VBOR VKOR
	01	B03A B03B B03C
	04	E36A E36B
	06	G12A G16A G16B G18A G38A G38B G38C
	11	L03Z L04A L04B L10A L10B L13A L13B L13C L33Z L38Z
	12	M06Z M09A M09B M37Z
	13	N01A N01B N01C N01D N08Z N11A N33Z N34Z
	21B	X06A X06B X06C
56.51.30↔		BORP KORP MBOR MKOR MVE VAC VAC I VAC II VBOR VKOR
	01	B03A B03B B03C
	04	E36A E36B
	06	G12A G16A G16B G18A G38A G38B G38C
	11	L03Z L04A L04B L10A L10B L13A L13B L13C L33Z L38Z
	12	M06Z M09A M09B M37Z
	13	N01A N01B N01C N01D N08Z N11A N33Z N34Z
	21B	X06A X06B X06C
56.51.99↔		MVE
	01	B03A B03B B03C
	06	G16A G16B G18A G38A G38B G38C
	11	L03Z L04A L04B L10A L10B L13A L13B L13C L33Z L38Z
	12	M06Z M09A M09B M37Z
	13	N01A N01B N01C N01D N08Z N11A N33Z N34Z
	21B	X06A X06B X06C
56.52.00↔		BORP MBOR VAC VBOR
	01	B03A B03B B03C
	04	E36A E36B
	06	G12A G16A G16B G18A G38A G38B G38C
	11	L03Z L04A L04B L10A L10B L13A L13B L13C L33Z L38Z
	12	M06Z M09A M09B M37Z
	13	N01A N01B N01C N01D N11A N33Z N34Z
	21B	X06A X06B X06C
56.52.10↔		BORP MBOR MVE VAC VAC I VAC II VBOR
	01	B03A B03B B03C
	04	E36A E36B
	06	G12A G16A G16B G18A G38A G38B G38C
	11	L03Z L04A L04B L10A L10B L13A L13B L13C L33Z L38Z
	12	M06Z M09A M09B M37Z
	13	N01A N01B N01C N01D N11A N33Z N34Z
	21B	X06A X06B X06C
56.52.20↔		BORP MBOR MVE VAC VAC I VAC II VBOR
	01	B03A B03B B03C
	04	E36A E36B
	06	G12A G16A G16B G18A G38A G38B G38C
	11	L03Z L04A L04B L10A L10B L13A L13B L13C L33Z L38Z
	12	M06Z M09A M09B M37Z
	13	N01A N01B N01C N01D N11A N33Z N34Z
	21B	X06A X06B X06C
56.52.99↔		BORP MBOR MVE VAC VBOR
	01	B03A B03B B03C
	04	E36A E36B
	06	G12A G16A G16B G18A G38A G38B G38C
	11	L03Z L04A L04B L10A L10B L13A L13B L13C L33Z L38Z
	12	M06Z M09A M09B M37Z
	13	N01A N01B N01C N01D N11A N33Z N34Z
	21B	X06A X06B X06C
56.61.00↔		BORP MBOR VAC VAC I VAC II VBOR
	01	B03A B03B B03C
	04	E36A E36B
	06	G12A G16A G16B G18A G38A G38B G38C
	11	L03Z L04A L04B L10A L10B L13A L13B L13C L33Z L38Z
	12	M06Z M09A M09B M37Z
	13	N01D N08Z N11A
	21B	X06A X06B X06C
56.61.10↔		BORP MBOR MVE VAC VAC I VAC II VBOR
	01	B03A B03B B03C
	04	E36A E36B
	06	G12A G16A G16B G18A G38A G38B G38C
	11	L03Z L04A L04B L10A L10B L13A L13B L13C L33Z L38Z
	12	M06Z M09A M09B M37Z
	13	N01D N08Z N11A
	21B	X06A X06B X06C
56.61.20↔		BORP MBOR MVE VAC VAC I VAC II VBOR
	01	B03A B03B B03C
	04	E36A E36B
	06	G12A G16A G16B G18A G38A G38B G38C
	11	L03Z L04A L04B L10A L10B L13A L13B L13C L33Z L38Z
	12	M06Z M09A M09B M37Z
	13	N01D N08Z N11A
	21B	X06A X06B X06C
56.61.99↔		BORP MBOR MVE VAC VAC I VAC II VBOR
	01	B03A B03B B03C
	04	E36A E36B
	06	G12A G16A G16B G18A G38A G38B G38C
	11	L03Z L04A L04B L10A L10B L13A L13B L13C L33Z L38Z
	12	M06Z M09A M09B M37Z
	13	N01D N08Z N11A
	21B	X06A X06B X06C
56.62↔		BORP MBOR MVE VAC VBOR
	01	B03A B03B B03C
	04	E36A E36B
	06	G12A G16A G16B G18A G38A G38B G38C

PROC

PROC

CHOP	MDC	DRG
	11	L03Z L04A L04B L10A L10B L13A L13B L13C L33Z L38Z
	12	M06Z M09A M09B M37Z
	13	N01D N11A
	21B	X06A X06B X06C
56.71.00↔		BORP MBOR VAC VAC I VAC II VBOR
	04	E36A E36B
	06	G12A G16A G16B G18A G38A G38B G38C
	11	L03Z L04A L04B L10A L10B L13A L13B L13C L33Z L38Z
	12	M06Z M09A M09B M37Z
	13	N01A N01B N01C N01D N08Z N11A N33Z N34Z
	21B	X06A X06B X06C
56.71.10↔		BORP MBOR MVE VAC VAC I VAC II VBOR
	04	E36A E36B
	06	G12A G16A G16B G18A G38A G38B G38C
	11	L03Z L04A L04B L10A L10B L13A L13B L13C L33Z L38Z
	12	M06Z M09A M09B M37Z
	13	N01A N01B N01C N01D N08Z N11A N33Z N34Z
	21B	X06A X06B X06C
56.71.11↔		BORP MBOR MVE VAC VAC I VAC II VBOR
	04	E36A E36B
	06	G12A G16A G16B G18A G38A G38B G38C
	11	L03Z L04A L04B L10A L10B L13A L13B L13C L33Z L38Z
	12	M06Z M09A M09B M37Z
	13	N01A N01B N01C N01D N08Z N11A N33Z N34Z
	21B	X06A X06B X06C
56.71.20↔		BORP MBOR MVE VAC VAC I VAC II VBOR
	04	E36A E36B
	06	G12A G16A G16B G18A G38A G38B G38C
	11	L03Z L04A L04B L10A L10B L13A L13B L13C L33Z L38Z
	12	M06Z M09A M09B M37Z
	13	N01A N01B N01C N01D N08Z N11A N33Z N34Z
	21B	X06A X06B X06C
56.71.99↔		BORP MBOR MVE VAC VAC I VAC II VBOR
	04	E36A E36B
	06	G12A G16A G16B G18A G38A G38B G38C
	11	L03Z L04A L04B L10A L10B L13A L13B L13C L33Z L38Z
	12	M06Z M09A M09B M37Z
	13	N01A N01B N01C N01D N08Z N11A N33Z N34Z
	21B	X06A X06B X06C
56.72↔		BORP MBOR MVE VAC VAC I VAC II VBOR
	04	E36A E36B
	06	G12A G16A G16B G18A G38A G38B G38C
	11	L03Z L04A L04B L10A L10B L13A L13B L13C L33Z L38Z
	12	M06Z M09A M09B M37Z
	13	N01A N01B N01C N01D N11A N33Z N34Z
	21B	X06A X06B X06C
56.73↔		BORP MBOR VAC VAC I VAC II VBOR
	04	E36A E36B
	06	G12A G16A G38A G38B
	11	L03Z L04A L04B L10A L10B L13A L13B L13C L38Z
	21B	X06A X06B X06C
56.74.00↔		BORP MBOR VAC VAC I VAC II VBOR
	04	E36A E36B
	06	G12A G16A G38A G38B
	11	L03Z L04A L04B L10A L10B L13A L13B L13C L38Z
	13	N08Z
	21B	X06A X06B X06C
56.74.10↔		BORP MBOR VAC VAC I VAC II VBOR
	04	E36A E36B
	06	G12A G16A G38A G38B
	11	L03Z L04A L04B L10A L10B L13A L13B L13C L38Z
	13	N08Z
	21B	X06A X06B X06C
56.74.11↔		BORP MBOR VAC VAC I VAC II VBOR
	04	E36A E36B
	06	G12A G16A G38A G38B
	11	L03Z L04A L04B L10A L10B L13A L13B L13C L38Z
	13	N08Z
	21B	X06A X06B X06C
56.74.20↔		BORP MBOR VAC VAC I VAC II VBOR
	04	E36A E36B
	06	G12A G16A G38A G38B
	11	L03Z L04A L04B L10A L10B L13A L13B L13C L38Z
	13	N08Z
	21B	X06A X06B X06C
56.74.99↔		BORP MBOR VAC VAC I VAC II VBOR
	04	E36A E36B
	06	G12A G16A G38A G38B
	11	L03Z L04A L04B L10A L10B L13A L13B L13C L38Z
	13	N08Z
	21B	X06A X06B X06C
56.75↔		BORP MBOR VAC VAC I VAC II VBOR
	04	E36A E36B
	06	G12A G16A G38A G38B
	11	L03Z L04A L04B L10A L10B L13A L13B L13C L38Z
	12	M06Z M09A M09B M37Z
	13	N01D N11A
	21B	X06A X06B X06C
56.79↔		BORP MBOR VAC VAC I VAC II VBOR
	04	E36A E36B
	06	G12A G16A G38A G38B
	11	L03Z L04A L04B L10A L10B L13A L13B L13C L38Z
	21B	X06A X06B X06C
56.81↔		BORP MBOR VAC VAC I VAC II VBOR
	04	E36A E36B
	06	G12A G16A G21A G21B G21C G38A G38B
	07	H06Z H07C
	11	L03Z L04A L04B L06A L06B L09A L09B L10A L10B L13A L13B L13C L20A L20B L20C L20D L20E L38Z
	12	M04A M04B M04C M06Z M09A M09B M37Z
	13	N02A N02B N02C N04A N04B N04C N06B N33Z
	21B	X06A X06B X06C
56.82↔		BORP MBOR VAC

CHOP	MDC	DRG
		VAC I VAC II VBOR
	04	E36A E36B
	06	G12A G16A G38A G38B
	11	L03Z L04A L04B L10A L10B L13A L13B L13C L38Z
	21B	X06A X06B X06C
56.83↔		BORP MBOR VAC VBOR
	04	E36A E36B
	06	G12A G16A G38A G38B
	11	L03Z L04A L04B L10A L10B L13A L13B L13C L38Z
	12	M06Z M09A M09B M37Z
	13	N08Z N11A N11B
	21B	X06A X06B X06C
56.84.00↔		BORP MBOR VAC VAC I VAC II VBOR
	04	E36A E36B
	06	G04A G04B G12A G16A G38A G38B G38C
	11	L03Z L04A L04B L10A L10B L13A L13B L13C L38Z
	13	N04C N06A N06B N06C N13Z
	21B	X06A X06B X06C
56.84.10↔		BORP MBOR VAC VAC I VAC II VBOR
	04	E36A E36B
	06	G04A G04B G12A G16A G38A G38B G38C
	11	L03Z L04A L04B L10A L10B L13A L13B L13C L38Z
	13	N04C N06A N06B N06C N13Z
	21B	X06A X06B X06C
56.84.11↔		BORP MBOR VAC VAC I VAC II VBOR
	04	E36A E36B
	06	G04A G04B G12A G16A G38A G38B G38C
	11	L03Z L04A L04B L10A L10B L13A L13B L13C L38Z
	13	N04C N06A N06B N06C N13Z
	21B	X06A X06B X06C
56.84.20↔		BORP MBOR VAC VAC I VAC II VBOR
	04	E36A E36B
	06	G04A G04B G12A G16A G38A G38B G38C
	11	L03Z L04A L04B L10A L10B L13A L13B L13C L38Z
	13	N04C N06A N06B N06C N13Z
	21B	X06A X06B X06C
56.84.21↔		BORP MBOR VAC VAC I VAC II VBOR
	04	E36A E36B
	06	G04A G04B G12A G16A G38A G38B G38C
	11	L03Z L04A L04B L10A L10B L13A L13B L13C L38Z
	13	N04C N06A N06B N06C N13Z
	21B	X06A X06B X06C
56.84.22↔		BORP MBOR VAC VAC I VAC II VBOR
	04	E36A E36B
	06	G04A G04B G12A G16A G38A G38B G38C
	11	L03Z L04A L04B L10A L10B L13A L13B L13C L38Z
	13	N04C N06A N06B N06C N13Z
	21B	X06A X06B X06C
56.84.99↔		BORP MBOR VAC VAC I VAC II VBOR
	04	E36A E36B
	06	G04A G04B G12A G16A G38A G38B G38C
	11	L03Z L04A L04B L10A L10B L13A L13B L13C L38Z
	13	N04C N06A N06B N06C N13Z
	21B	X06A X06B X06C
56.85↔		BORP MBOR VAC VAC I VAC II VBOR
	04	E36A E36B
	06	G12A G16A G38A G38B
	11	L03Z L04A L04B L10A L10B L13A L13B L13C L38Z
	21B	X06A X06B X06C
56.86↔		BORP MBOR VAC VAC I VAC II VBOR
	04	E36A E36B
	06	G12A G16A G38A G38B
	11	L03Z L04A L04B L10A L10B L13A L13B L13C L38Z
	21B	X06A X06B X06C
56.89↔		BORP MBOR VAC VBOR
	04	E36A E36B
	06	G12A G16A G38A G38B
	11	L03Z L04A L04B L10A L10B L13A L13B L13C L38Z
	21B	X06A X06B X06C
56.91‡↔	01	B60A
	11	L63C L64B
56.92↔		BORP MBOR VAC VAC I VAC II VBOR
	01	B21A B21B B21C B21D B21E B21F
	04	E36A E36B
	06	G12A G16A G38A G38B
56.93↔		BORP MBOR VAC VAC I VAC II VBOR
	01	B21A B21B B21C B21D B21E B21F
	04	E36A E36B
	06	G12A G16A G38A G38B
56.94↔		BORP MBOR VAC VAC I VAC II VBOR
	01	B03A B03B B03C
	04	E36A E36B
	06	G12A G16A G38A G38B
	08	I23A I23B I23C
	11	L06A L06B
	12	M06Z M09A M09B M37Z
	13	N11A N11B
	21B	X06A X06B X06C
56.95↔		BORP MBOR VAC VBOR
	01	B03A B03B B03C
	04	E36A E36B
	06	G12A G16A G38A G38B
	11	L03Z L04A L04B L10A L10B L13A L13B L13C L38Z
	21B	X06A X06B X06C
56.99.00↔	01	B03A B03B B03C
	11	L03Z L04A L04B L06A L06B L10A L10B L13A L13B L13C L20A L20B L20C L20D L20E L38Z
	12	M06Z M09A M09B M37Z
	13	N11A N11B
	21B	X06A X06B X06C
56.99.10↔	01	B03A B03B B03C
	11	L03Z L04A L04B L06A L06B L10A L10B L13A L13B L13C L20A L20B L20C L20D L20E L38Z
	12	M06Z M09A M09B M37Z
	13	N11A N11B
	21B	X06A X06B X06C
56.99.20↔	01	B03A B03B B03C
	11	L03Z L04A L04B L06A L06B L10A L10B L13A L13B L13C L20A L20B L20C L20D L20E L38Z
	12	M06Z M09A M09B M37Z
	13	N11A N11B
	21B	X06A X06B X06C
56.99.21↔	01	B03A B03B B03C
	11	L03Z L04A L04B L06A L06B L10A L10B L13A L13B L13C L20A L20B L20C L20D L20E L38Z
	12	M06Z M09A M09B

PROC

CHOP	MDC	DRG
		M37Z
	13	N11A N11B
	21B	X06A X06B X06C
56.99.30↔	01	B03A B03B B03C
	11	L03Z L04A L04B L06A L06B L10A L10B L13A L13B L13C L20A L20B L20C L20D L20E L38Z
	12	M06Z M09A M09B M37Z
	13	N11A N11B
	21B	X06A X06B X06C
56.99.31↔	01	B03A B03B B03C
	11	L03Z L04A L04B L06A L06B L10A L10B L13A L13B L13C L20A L20B L20C L20D L20E L38Z
	12	M06Z M09A M09B M37Z
	13	N11A N11B
	21B	X06A X06B X06C
56.99.32↔	01	B03A B03B B03C
	11	L03Z L04A L04B L06A L06B L10A L10B L13A L13B L13C L20A L20B L20C L20D L20E L38Z
	12	M06Z M09A M09B M37Z
	13	N11A N11B
	21B	X06A X06B X06C
56.99.99↔	01	B03A B03B B03C
	11	L03Z L04A L04B L06A L06B L10A L10B L13A L13B L13C L20A L20B L20C L20D L20E L38Z
	12	M06Z M09A M09B M37Z
	13	N11A N11B
	21B	X06A X06B X06C
57.12↔		BORP MBOR VAC VAC I VAC II VBOR
	01	B03A B03B B03C
	04	E36A E36B
	06	G12A G16A G21A G21B G21C G38A G38B
	07	H06Z H07C
	11	L03Z L04A L04B L06A L06B L09A L09B L10A L10B L13A L13B L13C L20A L20B L20C L20D L20E L38Z
	12	M04A M04B M04C M06Z M09A M09B M37Z
	13	N02A N02B N02C N04A N04B N04C N06B N33Z
	21B	X06A X06B X06C
57.19.10‡↔	01	B60A
	11	L42A L60A L60C

CHOP	MDC	DRG
		L63A L63C L64B L70B
57.19.11‡↔	01	B60A
	11	L42A L60A L60C L63A L63C L64B L70B
57.19.21↔	11	L06A L06B
57.19.22↔	11	L06A L06B
57.19.23↔	11	L06A L06B
57.21↔		BORP MBOR VAC VBOR
	01	B03A B03B B03C
	04	E36A E36B
	06	G12A G16A G38A G38B
	11	L06A L06B
	12	M06Z M09A M09B M37Z
	13	N13Z
	21B	X06A X06B X06C
57.22↔		BORP MBOR VAC VBOR
	01	B03A B03B B03C
	04	E36A E36B
	06	G12A G16A G38A G38B
	11	L06A L06B
	12	M06Z M09A M09B M37Z
	13	N13Z
	21B	X06A X06B X06C
57.23.00↔		BORP MBOR VAC VAC I VAC II VBOR
	01	B03A B03B B03C
	04	E36A E36B
	06	G12A G16A G38A G38B
	11	L06A L06B
	12	M06Z M09A M09B M37Z
	13	N13Z
	21B	X06A X06B X06C
57.23.11↔		BORP MBOR VAC VAC I VAC II VBOR
	01	B03A B03B B03C
	04	E36A E36B
	06	G12A G16A G38A G38B
	11	L03Z L38Z
	12	M06Z M09A M09B M37Z
	13	N13Z
	21B	X06A X06B X06C
57.23.12↔		BORP MBOR VAC VAC I VAC II VBOR
	01	B03A B03B B03C
	04	E36A E36B
	06	G12A G16A G38A G38B
	11	L06A L06B
	12	M06Z M09A M09B M37Z
	13	N13Z
	21B	X06A X06B X06C
57.23.13↔		BORP MBOR VAC VAC I VAC II VBOR
	01	B03A B03B B03C
	04	E36A E36B
	06	G12A G16A G38A G38B

CHOP	MDC	DRG
	11	L06A L06B
	12	M06Z M09A M09B M37Z
	13	N13Z
	21B	X06A X06B X06C
57.23.99↔		BORP MBOR VAC VAC I VAC II VBOR
	01	B03A B03B B03C
	04	E36A E36B
	06	G12A G16A G38A G38B
	11	L06A L06B
	12	M06Z M09A M09B M37Z
	13	N13Z
	21B	X06A X06B X06C
57.32‡↔	01	B60A
	11	L42A L60A L60C L63A L63C L64B L70B
57.33‡↔		AKBB
	01	B60A
	16	Q86A
57.34↔	01	B03A B03B B03C
	11	L06A L06B
	12	M06Z M09A M09B M37Z
	13	N11A N11B
57.41↔		BORP VAC I VAC II
	01	B03A B03B B03C
	04	E36A E36B
	06	G16A G21A G21B G21C G38A G38B
	07	H06Z H07C
	11	L03Z L04A L04B L06A L06B L09A L09B L10A L10B L13A L13B L13C L20A L20B L20C L20D L20E L38Z
	12	M04A M04B M04C M06Z M09A M09B M37Z
	13	N02A N02B N02C N04A N04B N04C N06B N33Z
	21B	X06A X06B X06C
57.49.11↔		BORP MBOR VAC VAC I VAC II VBOR
	01	B03A B03B B03C
	04	E36A E36B
	06	G12A G12B G16A G38A G38B
	11	L13A L13B L13C L18A L18B L18C L38Z
	12	M06Z M09A M09B M37Z
	13	N11A N11B
57.49.12↔		BORP MBOR VAC VAC I VAC II VBOR
	01	B03A B03B B03C
	04	E36A E36B
	06	G12A G12B G16A G38A G38B
	11	L13A L13B L13C L18A L18B L18C L38Z
	12	M06Z M09A M09B M37Z

CHOP	MDC	DRG
	13	N11A N11B
57.49.99↔		BORP MBOR VAC
		VAC I VAC II VBOR
	01	B03A B03B B03C
	04	E36A E36B
	06	G12A G12B G16A
		G38A G38B
	11	L13A L13B L13C
		L18A L18B L18C
		L38Z
	12	M06Z M09A M09B
		M37Z
	13	N11A N11B
57.51↔		BORP MBOR VAC
		VAC I VAC II VBOR
	01	B03A B03B B03C
	04	E36A E36B
	06	G09A G09B G09C
		G09D G09E G09F
		G09G G09H G12A
		G16A G38A G38B
	08	I27B
	09	J11A J11B
	11	L06A L06B
	12	M06Z M09A M09B
		M37Z
	13	N11A N11B
	21B	X06A X06B X06C
57.58↔		BORP MBOR VAC
		VAC I VAC II VBOR
	01	B03A B03B B03C
	04	E36A E36B
	06	G12A G16A G38A
		G38B
	11	L06A L06B
	12	M06Z M09A M09B
		M37Z
	13	N08Z N11A N11B
	21B	X06A X06B X06C
57.59.00↔		BORP MBOR VAC
		VAC I VAC II VBOR
	01	B03A B03B B03C
	04	E36A E36B
	06	G12A G16A G38A
		G38B
	11	L06A L06B
	12	M06Z M09A M09B
		M37Z
	13	N08Z N11A N11B
	21B	X06A X06B X06C
57.59.10↔		BORP MBOR VAC
		VAC I VAC II VBOR
	01	B03A B03B B03C
	04	E36A E36B
	06	G12A G16A G38A
		G38B
	11	L06A L06B
	12	M06Z M09A M09B
		M37Z
	13	N08Z N11A N11B
	21B	X06A X06B X06C
57.59.20↔		BORP MBOR VAC
		VAC I VAC II VBOR
	01	B03A B03B B03C
	04	E36A E36B
	06	G12A G16A G38A
		G38B
	11	L06A L06B
	12	M06Z M09A M09B
		M37Z
	13	N08Z N11A N11B
	21B	X06A X06B X06C
57.59.99↔		BORP MBOR VAC
		VAC I VAC II VBOR
	01	B03A B03B B03C
	04	E36A E36B
	06	G12A G16A G38A
		G38B
	11	L06A L06B
	12	M06Z M09A M09B
		M37Z
	13	N08Z N11A N11B
	21B	X06A X06B X06C
57.6X.00↔		BORP MBOR VAC
		VAC I VAC II VBOR
	01	B03A B03B B03C
	04	E36A E36B
	06	G12A G16A G16B
		G18A G38A G38B
		G38C
	11	L03Z L04A L04B
		L06A L06B L10A
		L10B L13A L13B
		L13C L38Z
	12	M01Z
	13	N01A N01B N01C
		N01D N08Z N11A
		N11B N33Z N34Z
	21B	X06A X06B X06C
57.6X.10↔		BORP MBOR VAC
		VAC I VAC II VBOR
	01	B03A B03B B03C
	04	E36A E36B
	06	G12A G16A G16B
		G18A G38A G38B
		G38C
	11	L03Z L04A L04B
		L06A L06B L10A
		L10B L13A L13B
		L13C L38Z
	12	M01Z
	13	N01A N01B N01C
		N01D N08Z N11A
		N11B N33Z N34Z
	21B	X06A X06B X06C
57.6X.11↔		BORP MBOR VAC
		VAC I VAC II VBOR
	01	B03A B03B B03C
	04	E36A E36B
	06	G12A G16A G16B
		G18A G38A G38B
		G38C
	11	L03Z L04A L04B
		L06A L06B L10A
		L10B L13A L13B
		L13C L38Z
	12	M01Z
	13	N01A N01B N01C
		N01D N08Z N11A
		N11B N33Z N34Z
	21B	X06A X06B X06C
57.6X.12↔		BORP MBOR VAC
		VAC I VAC II VBOR
	01	B03A B03B B03C
	04	E36A E36B
	06	G12A G16A G16B
		G18A G38A G38B
		G38C
	11	L03Z L04A L04B
		L06A L06B L10A
		L10B L13A L13B
		L13C L38Z
	12	M01Z M37Z
	13	N01A N01B N01C
		N01D N08Z N11A
		N11B N33Z N34Z
	21B	X06A X06B X06C
57.6X.13↔		BORP MBOR VAC
		VAC I VAC II VBOR
	01	B03A B03B B03C
	04	E36A E36B
	06	G12A G16A G16B
		G18A G38A G38B
		G38C
	11	L03Z L04A L04B
		L06A L06B L10A
		L10B L13A L13B
		L13C L38Z
	12	M01Z M37Z
	13	N01A N01B N01C
		N01D N08Z N11A
		N11B N33Z N34Z
	21B	X06A X06B X06C
57.6X.20↔		BORP MBOR VAC
		VAC I VAC II VBOR
	01	B03A B03B B03C
	04	E36A E36B
	06	G12A G16A G16B
		G18A G38A G38B
		G38C
	11	L03Z L04A L04B
		L06A L06B L10A
		L10B L13A L13B
		L13C L38Z
	12	M01Z M37Z
	13	N01A N01B N01C
		N01D N08Z N11A
		N11B N33Z N34Z
	21B	X06A X06B X06C
57.6X.21↔		BORP MBOR VAC
		VAC I VAC II VBOR
	01	B03A B03B B03C
	04	E36A E36B
	06	G12A G16A G16B
		G18A G38A G38B
		G38C
	11	L03Z L04A L04B
		L06A L06B L10A
		L10B L13A L13B
		L13C L38Z
	12	M01Z M37Z
	13	N01A N01B N01C
		N01D N08Z N11A
		N11B N33Z N34Z
	21B	X06A X06B X06C
57.6X.22↔		BORP MBOR VAC
		VAC I VAC II VBOR
	01	B03A B03B B03C
	04	E36A E36B
	06	G12A G16A G16B
		G18A G38A G38B
		G38C
	11	L03Z L04A L04B
		L06A L06B L10A
		L10B L13A L13B
		L13C L38Z
	12	M01Z M37Z
	13	N01A N01B N01C
		N01D N08Z N11A
		N11B N33Z N34Z

PROC

PROC

CHOP	MDC	DRG
	21B	X06A X06B X06C
57.6X.23↔		BORP MBOR VAC
		VAC I VAC II VBOR
	01	B03A B03B B03C
	04	E36A E36B
	06	G12A G16A G16B
		G18A G38A G38B
		G38C
	11	L03Z L04A L04B
		L06A L06B L10A
		L10B L13A L13B
		L13C L38Z
	12	M01Z M37Z
	13	N01A N01B N01C
		N01D N08Z N11A
		N11B N33Z N34Z
	21B	X06A X06B X06C
57.6X.99↔		BORP MBOR VAC
		VAC I VAC II VBOR
	01	B03A B03B B03C
	04	E36A E36B
	06	G12A G16A G16B
		G18A G38A G38B
		G38C
	11	L03Z L04A L04B
		L06A L06B L10A
		L10B L13A L13B
		L13C L38Z
	12	M01Z
	13	N01A N01B N01C
		N01D N08Z N11A
		N11B N33Z N34Z
	21B	X06A X06B X06C
57.71.00↔		BORP KORP MBOR
		MKOR VAC VAC I
		VAC II VBOR VKOR
	01	B03A B03B B03C
	04	E36A E36B
	06	G12A G16A G16B
		G18A G33Z G38A
		G38B G38C
	07	H33Z
	11	L03Z L04A L04B
		L10A L10B L13A
		L13B L13C L33Z
		L38Z
	12	M01Z M37Z
	13	N01A N01B N01C
		N01D N11A N33Z
		N34Z
	21B	X06A X06B X06C
		X07A X07B
57.71.10↔		BORP KORP MBOR
		MKOR MVE VAC
		VAC I VAC II VBOR
		VKOR
	01	B03A B03B B03C
	04	E36A E36B
	06	G12A G16A G16B
		G18A G33Z G38A
		G38B G38C
	07	H33Z
	11	L03Z L04A L04B
		L10A L10B L13A
		L13B L13C L33Z
		L38Z
	12	M01Z M37Z
	13	N01A N01B N01C
		N01D N11A N33Z
		N34Z
	21B	X06A X06B X06C
		X07A X07B
57.71.11↔		BORP KORP MBOR
		MKOR MVE VAC
		VAC I VAC II VBOR
		VKOR
	01	B03A B03B B03C
	04	E36A E36B
	06	G12A G16A G16B
		G18A G33Z G38A
		G38B G38C
	07	H33Z
	11	L03Z L04A L04B
		L10A L10B L13A
		L13B L13C L33Z
		L38Z
	12	M01Z M37Z
	13	N01A N01B N01C
		N01D N11A N33Z
		N34Z
	21B	X06A X06B X06C
		X07A X07B
57.71.20↔		BORP KORP MBOR
		MKOR MVE VAC
		VAC I VAC II VBOR
		VKOR
	01	B03A B03B B03C
	04	E36A E36B
	06	G12A G16A G16B
		G18A G33Z G38A
		G38B G38C
	07	H33Z
	11	L03Z L04A L04B
		L10A L10B L13A
		L13B L13C L33Z
		L38Z
	12	M01Z M37Z
	13	N01A N01B N01C
		N01D N11A N33Z
		N34Z
	21B	X06A X06B X06C
		X07A X07B
57.71.21↔		BORP KORP MBOR
		MKOR MVE VAC
		VAC I VAC II VBOR
		VKOR
	01	B03A B03B B03C
	04	E36A E36B
	06	G12A G16A G16B
		G18A G33Z G38A
		G38B G38C
	07	H33Z
	11	L03Z L04A L04B
		L10A L10B L13A
		L13B L13C L33Z
		L38Z
	12	M01Z M37Z
	13	N01A N01B N01C
		N01D N11A N33Z
		N34Z
	21B	X06A X06B X06C
		X07A X07B
57.71.30↔		BORP KORP MBOR
		MKOR MVE VAC
		VAC I VAC II VBOR
		VKOR
	01	B03A B03B B03C
	04	E36A E36B
	06	G12A G16A G16B
		G18A G33Z G38A
		G38B G38C
	07	H33Z
	11	L03Z L04A L04B
		L10A L10B L13A
		L13B L13C L33Z
		L38Z
	12	M01Z M37Z
	13	N01A N01B N01C
		N01D N11A N33Z
		N34Z
	21B	X06A X06B X06C
		X07A X07B
57.71.31↔		BORP KORP MBOR
		MKOR MVE VAC
		VAC I VAC II VBOR
		VKOR
	01	B03A B03B B03C
	04	E36A E36B
	06	G12A G16A G16B
		G18A G33Z G38A
		G38B G38C
	07	H33Z
	11	L03Z L04A L04B
		L10A L10B L13A
		L13B L13C L33Z
		L38Z
	13	N01A N01B N01C
		N01D N11A N33Z
		N34Z
	21B	X06A X06B X06C
		X07A X07B
57.71.40↔		BORP KORP MBOR
		MKOR MVE VAC
		VAC I VAC II VBOR
		VKOR
	01	B03A B03B B03C
	04	E36A E36B
	06	G12A G16A G16B
		G18A G33Z G38A
		G38B G38C
	07	H33Z
	11	L03Z L04A L04B
		L10A L10B L13A
		L13B L13C L33Z
		L38Z
	13	N01A N01B N01C
		N01D N11A N33Z
		N34Z
	21B	X06A X06B X06C
		X07A X07B
57.71.41↔		BORP KORP MBOR
		MKOR MVE VAC
		VAC I VAC II VBOR
		VKOR
	01	B03A B03B B03C
	04	E36A E36B
	06	G12A G16A G16B
		G18A G33Z G38A
		G38B G38C
	07	H33Z
	11	L03Z L04A L04B
		L10A L10B L13A
		L13B L13C L33Z
		L38Z
	13	N01A N01B N01C
		N01D N11A N33Z
		N34Z
	21B	X06A X06B X06C
		X07A X07B
57.71.50↔		BORP KORP MBOR
		MKOR MVE VAC
		G38B G38C
	07	H33Z
	11	L03Z L04A L04B
		L10A L10B L13A
		L13B L13C L33Z
		L38Z
	13	N01A N01B N01C
		N01D N11A N33Z
		N34Z
	21B	X06A X06B X06C
		X07A X07B
57.71.31↔		BORP KORP MBOR
		MKOR MVE VAC
		VAC I VAC II VBOR
		VKOR
	01	B03A B03B B03C
	04	E36A E36B
	06	G12A G16A G16B
		G18A G33Z G38A
		G38B G38C
	07	H33Z
	11	L03Z L04A L04B
		L10A L10B L13A
		L13B L13C L33Z
		L38Z
	13	N01A N01B N01C
		N01D N11A N33Z
		N34Z
	21B	X06A X06B X06C
		X07A X07B
57.71.40↔		BORP KORP MBOR
		MKOR MVE VAC
		VAC I VAC II VBOR
		VKOR
	01	B03A B03B B03C
	04	E36A E36B
	06	G12A G16A G16B
		G18A G33Z G38A
		G38B G38C
	07	H33Z
	11	L03Z L04A L04B
		L10A L10B L13A
		L13B L13C L33Z
		L38Z
	13	N01A N01B N01C
		N01D N11A N33Z
		N34Z
	21B	X06A X06B X06C
		X07A X07B
57.71.41↔		BORP KORP MBOR
		MKOR MVE VAC
		VAC I VAC II VBOR
		VKOR
	01	B03A B03B B03C
	04	E36A E36B
	06	G12A G16A G16B
		G18A G33Z G38A
		G38B G38C
	07	H33Z
	11	L03Z L04A L04B
		L10A L10B L13A
		L13B L13C L33Z
		L38Z
	13	N01A N01B N01C
		N01D N11A N33Z
		N34Z
	21B	X06A X06B X06C
		X07A X07B
57.71.50↔		BORP KORP MBOR
		MKOR MVE VAC

CHOP	MDC	DRG
		VAC I VAC II VBOR VKOR
	01	B03A B03B B03C
	04	E36A E36B
	06	G12A G16A G16B G18A G33Z G38A G38B G38C
	07	H33Z
	11	L03Z L04A L04B L10A L10B L13A L13B L13C L33Z L38Z
	12	M01Z M37Z
	13	N01A N01B N01C N01D N11A N33Z N34Z
	21B	X06A X06B X06C X07A X07B
57.71.51↔		BORP KORP MBOR MKOR MVE VAC VAC I VAC II VBOR VKOR
	01	B03A B03B B03C
	04	E36A E36B
	06	G12A G16A G16B G18A G33Z G38A G38B G38C
	07	H33Z
	11	L03Z L04A L04B L10A L10B L13A L13B L13C L33Z L38Z
	12	M01Z M37Z
	13	N01A N01B N01C N01D N11A N33Z N34Z
	21B	X06A X06B X06C X07A X07B
57.71.99↔		BORP KORP MBOR MKOR MVE VAC VAC I VAC II VBOR VKOR
	01	B03A B03B B03C
	04	E36A E36B
	06	G12A G16A G16B G18A G33Z G38A G38B G38C
	07	H33Z
	11	L03Z L04A L04B L10A L10B L13A L13B L13C L33Z L38Z
	12	M01Z M37Z
	13	N01A N01B N01C N01D N11A N33Z N34Z
	21B	X06A X06B X06C X07A X07B
57.79.00↔		BORP MBOR VAC VAC I VAC II VBOR
	01	B03A B03B B03C
	04	E36A E36B
	06	G12A G16A G16B G18A G38A G38B G38C
	11	L03Z L04A L04B L10A L10B L13A L13B L13C L38Z
	12	M01Z M37Z
	13	N01A N01B N01C N01D N11A N33Z N34Z
	21B	X06A X06B X06C
57.79.10↔		BORP MBOR MVE VAC VAC I VAC II VBOR
	01	B03A B03B B03C
	04	E36A E36B
	06	G12A G16A G16B G18A G38A G38B G38C
	11	L03Z L04A L04B L10A L10B L13A L13B L13C L38Z
	12	M01Z M37Z
	13	N01A N01B N01C N01D N11A N33Z N34Z
	21B	X06A X06B X06C
57.79.11↔		BORP MBOR MVE VAC VAC I VAC II VBOR
	01	B03A B03B B03C
	04	E36A E36B
	06	G12A G16A G16B G18A G38A G38B G38C
	11	L03Z L04A L04B L10A L10B L13A L13B L13C L38Z
	12	M01Z M37Z
	13	N01A N01B N01C N01D N11A N33Z N34Z
	21B	X06A X06B X06C
57.79.20↔		BORP MBOR MVE VAC VAC I VAC II VBOR
	01	B03A B03B B03C
	04	E36A E36B
	06	G12A G16A G16B G18A G38A G38B G38C
	11	L03Z L04A L04B L10A L10B L13A L13B L13C L38Z
	13	N01A N01B N01C N01D N11A N33Z N34Z
	21B	X06A X06B X06C
57.79.21↔		BORP MBOR MVE VAC VAC I VAC II VBOR
	01	B03A B03B B03C
	04	E36A E36B
	06	G12A G16A G16B G18A G38A G38B G38C
	11	L03Z L04A L04B L10A L10B L13A L13B L13C L38Z
	13	N01A N01B N01C N01D N11A N33Z N34Z
	21B	X06A X06B X06C
57.79.99↔		BORP MBOR MVE VAC VAC I VAC II VBOR
	01	B03A B03B B03C
	04	E36A E36B
	06	G12A G16A G16B G18A G38A G38B G38C
	11	L03Z L04A L04B L10A L10B L13A L13B L13C L38Z
	12	M01Z M37Z
	13	N01A N01B N01C N01D N11A N33Z N34Z
	21B	X06A X06B X06C
57.81↔		BORP MBOR VAC VAC I VAC II VBOR
	01	B03A B03B B03C
	04	E36A E36B
	06	G12A G16A G38A G38B
	11	L06A L06B
	12	M06Z M09A M09B M37Z
	13	N11A N11B
	14	O02A O02B
	21B	X06A X06B X06C
57.82↔	01	B03A B03B B03C
	11	L06A L06B
	12	M06Z M09A M09B M37Z
	13	N11A N11B
	21B	X06A X06B X06C
57.83↔		BORP MBOR VAC VAC I VAC II VBOR
	01	B03A B03B B03C
	04	E36A E36B
	06	G04A G04B G12A G16A G16B G38A G38B G38C
	11	L03Z L04A L04B L10A L10B L13A L13B L13C L38Z
	12	M06Z M09A M09B M37Z
	13	N11A N11B
	21B	X06A X06B X06C
57.84.00↔		BORP MBOR VAC VAC I VAC II VBOR
	04	E36A E36B
	06	G12A G16A G38A G38B
	11	L06A L06B
	12	M06Z M09A M09B M37Z
	13	N04C N06A N06B N06C N11A N11B
	21B	X06A X06B X06C
57.84.10↔		BORP MBOR VAC VAC I VAC II VBOR
	04	E36A E36B
	06	G12A G16A G38A G38B
	11	L06A L06B
	12	M06Z M09A M09B M37Z
	13	N01D N04C N06A N06B N06C N11A
	21B	X06A X06B X06C
57.84.11↔		BORP MBOR VAC VAC I VAC II VBOR
	04	E36A E36B
	06	G12A G16A G38A G38B

PROC

PROC

CHOP	MDC	DRG
	11	L06A L06B
	12	M06Z M09A M09B M37Z
	13	N01D N04C N06A N06B N06C N11A
	21B	X06A X06B X06C
57.84.12↔		BORP MBOR VAC VAC I VAC II VBOR
	04	E36A E36B
	06	G12A G16A G38A G38B
	11	L06A L06B
	12	M06Z M09A M09B M37Z
	13	N01D N04C N06A N06B N06C N11A
	21B	X06A X06B X06C
57.84.13↔		BORP MBOR VAC VAC I VAC II VBOR
	04	E36A E36B
	06	G12A G16A G38A G38B
	11	L06A L06B
	12	M06Z M09A M09B M37Z
	13	N01D N04C N06A N06B N06C N11A
	21B	X06A X06B X06C
57.84.20↔		BORP MBOR VAC VAC I VAC II VBOR
	04	E36A E36B
	06	G12A G16A G38A G38B
	11	L06A L06B
	12	M06Z M09A M09B M37Z
	13	N01D N04C N06A N06B N06C N11A
	21B	X06A X06B X06C
57.84.21↔		BORP MBOR VAC VAC I VAC II VBOR
	04	E36A E36B
	06	G12A G16A G38A G38B
	11	L06A L06B
	12	M06Z M09A M09B M37Z
	13	N01D N04C N06A N06B N06C N11A
	21B	X06A X06B X06C
57.84.99↔		BORP MBOR VAC VAC I VAC II VBOR
	04	E36A E36B
	06	G12A G16A G38A G38B
	11	L06A L06B
	12	M06Z M09A M09B M37Z
	13	N01D N04C N06A N06B N06C N11A
	21B	X06A X06B X06C
57.85↔		BORP MBOR VAC VAC I VAC II VBOR
	01	B03A B03B B03C
	04	E36A E36B
	06	G12A G16A G38A G38B
	11	L08A L08B
	12	M03A M03B
	13	N04C N06A N06B N06C
	21B	X06A X06B X06C
57.86↔		BORP MBOR MVE VAC VAC I VAC II VBOR
	01	B03A B03B B03C
	04	E36A E36B
	06	G02A G02B G12A G16A G16B G18A G38A G38B G38C
	11	L03Z L04A L04B L10A L10B L13A L13B L13C L38Z
57.87.00↔		BORP KORP MBOR MKOR VAC VAC I VAC II VBOR VKOR
	01	B03A B03B B03C
	04	E36A E36B
	06	G12A G16A G16B G18A G33Z G38A G38B G38C
	07	H33Z
	11	L09A L09B
	13	N01A N01B N01C N01D N33Z N34Z
	21B	X06A X06B X06C X07A X07B
57.87.10↔		BORP KORP MBOR MKOR MVE VAC VAC I VAC II VBOR VKOR
	01	B03A B03B B03C
	04	E36A E36B
	06	G12A G16A G16B G18A G33Z G38A G38B G38C
	07	H33Z
	11	L03Z L04A L04B L10A L10B L13A L13B L13C L33Z L38Z
	12	M37Z
	13	N01A N01B N01C N01D N33Z N34Z
	21B	X06A X06B X06C X07A X07B
57.87.11↔		BORP KORP MBOR MKOR MVE VAC VAC I VAC II VBOR VKOR
	01	B03A B03B B03C
	04	E36A E36B
	06	G12A G16A G16B G18A G33Z G38A G38B G38C
	07	H33Z
	11	L03Z L04A L04B L10A L10B L13A L13B L13C L33Z L38Z
	12	M37Z
	13	N01A N01B N01C N01D N33Z N34Z
	21B	X06A X06B X06C X07A X07B
57.87.20↔		BORP MBOR MVE VAC VAC I VAC II VBOR
	01	B03A B03B B03C
	04	E36A E36B
	06	G12A G16A G16B G18A G33Z G38A G38B G38C
	07	H33Z
	11	L03Z L04A L04B L10A L10B L13A L13B L13C L33Z L38Z
	12	M37Z
	13	N01A N01B N01C N01D N33Z N34Z
	21B	X06A X06B X06C X07A X07B
57.87.21↔		BORP MBOR MVE VAC VAC I VAC II VBOR
	01	B03A B03B B03C
	04	E36A E36B
	06	G12A G16A G16B G18A G33Z G38A G38B G38C
	07	H33Z
	11	L03Z L04A L04B L10A L10B L13A L13B L13C L33Z L38Z
	12	M37Z
	13	N01A N01B N01C N01D N33Z N34Z
	21B	X06A X06B X06C X07A X07B
57.87.30↔		BORP MBOR MVE VAC VAC I VAC II VBOR
	01	B03A B03B B03C
	04	E36A E36B
	06	G12A G16A G16B G18A G33Z G38A G38B G38C
	07	H33Z
	11	L03Z L04A L04B L10A L10B L13A L13B L13C L33Z L38Z
	12	M37Z
	13	N01A N01B N01C N01D N33Z N34Z
	21B	X06A X06B X06C X07A X07B
57.87.31↔		BORP MBOR MVE VAC VAC I VAC II VBOR
	01	B03A B03B B03C
	04	E36A E36B
	06	G12A G16A G16B G18A G33Z G38A G38B G38C
	07	H33Z
	11	L03Z L04A L04B L10A L10B L13A L13B L13C L33Z L38Z
	12	M37Z
	13	N01A N01B N01C N01D N33Z N34Z
	21B	X06A X06B X06C X07A X07B
57.87.40↔		BORP MBOR MVE VAC VAC I VAC II VBOR

CHOP	MDC	DRG
	01	B03A B03B B03C
	04	E36A E36B
	06	G12A G16A G16B G18A G33Z G38A G38B G38C
	07	H33Z
	11	L03Z L04A L04B L10A L10B L13A L13B L13C L33Z L38Z
	12	M37Z
	13	N01A N01B N01C N01D N33Z N34Z
	21B	X06A X06B X06C X07A X07B
57.87.41↔		BORP MBOR MVE VAC VAC I VAC II VBOR
	01	B03A B03B B03C
	04	E36A E36B
	06	G12A G16A G16B G18A G33Z G38A G38B G38C
	07	H33Z
	11	L03Z L04A L04B L10A L10B L13A L13B L13C L33Z L38Z
	12	M37Z
	13	N01A N01B N01C N01D N33Z N34Z
	21B	X06A X06B X06C X07A X07B
57.87.99↔		BORP MBOR MVE VAC VAC I VAC II VBOR
	01	B03A B03B B03C
	04	E36A E36B
	06	G12A G16A G16B G18A G33Z G38A G38B G38C
	07	H33Z
	11	L09A L09B
	12	M37Z
	13	N01A N01B N01C N01D N33Z N34Z
	21B	X06A X06B X06C X07A X07B
57.88↔		BORP MBOR VAC VAC I VAC II VBOR
	01	B03A B03B B03C
	04	E36A E36B
	06	G12A G16A G38A G38B
	07	H05A H33Z
	11	L06A L06B
	12	M06Z M09A M09B M37Z
	13	N11A N11B
	14	O02A O02B
	21B	X06A X06B X06C
57.89↔		BORP MBOR VAC VAC I VAC II VBOR
	01	B03A B03B B03C
	04	E36A E36B
	06	G12A G16A G38A G38B
	11	L06A L06B
	12	M03A M03B M06Z M09A M09B M37Z
	13	N04C N06A N06B N06C N11A N11B
	14	O02A O02B
	21B	X06A X06B X06C
57.93.00↔	01	B03A B03B B03C
	11	L06A L06B
	12	M06Z M09A M09B M37Z
	13	N13Z
	21B	X06A X06B X06C
57.93.10↔	01	B03A B03B B03C
	11	L06A L06B
	12	M06Z M09A M09B M37Z
	13	N13Z
	21B	X06A X06B X06C
57.93.11↔	01	B03A B03B B03C
	11	L06A L06B
	12	M06Z M09A M09B M37Z
	13	N13Z
	21B	X06A X06B X06C
57.93.12↔	01	B03A B03B B03C
	11	L06A L06B
	12	M06Z M09A M09B M37Z
	13	N13Z
	21B	X06A X06B X06C
57.93.13↔	01	B03A B03B B03C
	11	L06A L06B
	12	M06Z M09A M09B M37Z
	13	N13Z
	21B	X06A X06B X06C
57.93.14↔	01	B03A B03B B03C
	11	L06A L06B
	12	M06Z M09A M09B M37Z
	13	N13Z
	21B	X06A X06B X06C
57.93.99↔	01	B03A B03B B03C
	11	L06A L06B
	12	M06Z M09A M09B M37Z
	13	N13Z
	21B	X06A X06B X06C
57.99.10↔	01	B03A B03B B03C
	11	L06A L06B
	21B	X06A X06B X06C
57.99.11↔	01	B03A B03B B03C
	11	L06A L06B
	21B	X06A X06B X06C
57.99.12↔	01	B03A B03B B03C
	11	L06A L06B
	21B	X06A X06B X06C
57.99.13↔	01	B03A B03B B03C
	11	L06A L06B
	21B	X06A X06B X06C
57.99.14↔	01	B03A B03B B03C
	11	L06A L06B
	21B	X06A X06B X06C
57.99.16↔	01	B03A B03B B03C
	11	L06A L06B
	21B	X06A X06B X06C
57.99.17↔	01	B03A B03B B03C
	11	L06A L06B
	21B	X06A X06B X06C
57.99.22↔	01	B03A B03B B03C
	11	L06A L06B
	21B	X06A X06B X06C
57.99.23↔	01	B03A B03B B03C
	11	L06A L06B
	21B	X06A X06B X06C
57.99.30↔	01	B03A B03B B03C
	11	L06A L06B
	21B	X06A X06B X06C
57.99.31↔	01	B03A B03B B03C
	11	L06A L06B
	21B	X06A X06B X06C
57.99.32↔	01	B03A B03B B03C
	11	L06A L06B
	21B	X06A X06B X06C
57.99.33↔	01	B03A B03B B03C
	11	L06A L06B
	21B	X06A X06B X06C
57.99.34↔	01	B03A B03B B03C
	11	L06A L06B
	21B	X06A X06B X06C
57.99.41↔	01	B03A B03B B03C
	11	L06A L06B
	21B	X06A X06B X06C
57.99.42↔	01	B03A B03B B03C
	11	L06A L06B
	21B	X06A X06B X06C
57.99.43↔	01	B03A B03B B03C
	11	L06A L06B
	21B	X06A X06B X06C
57.99.44↔	01	B03A B03B B03C
	11	L06A L06B
	21B	X06A X06B X06C
57.99.45↔	01	B03A B03B B03C
	11	L06A L06B
	21B	X06A X06B X06C
58.0↔	01	B03A B03B B03C
	11	L17A L17B
	13	N11A N11B
	21B	X06A X06B X06C
58.1↔	01	B03A B03B B03C
	11	L17A L17B
	12	M06Z M09A M09B M37Z
	21B	X06A X06B X06C
58.22‡↔	01	B60A
	11	L42A L60A L60C L63A L70B
58.23‡↔		AKBB
	01	B60A
	16	Q86A
58.24↔	01	B03A B03B B03C
	11	L06A L06B
	12	M06Z M09A M09B M37Z
	21B	X06A X06B X06C
58.39.10↔	01	B03A B03B B03C
	09	J02A J02B J03A J03B J04Z J11A J11B
	11	L08A L08B
	13	N04C N06A N06B N06C
	21B	X06A X06B X06C
58.39.30↔	01	B03A B03B B03C
	11	L08A L08B
	13	N04C N06A N06B N06C
	21B	X06A X06B X06C
58.39.31↔	01	B03A B03B B03C
	11	L08A L08B
	13	N04C N06A N06B N06C

PROC

CHOP	MDC	DRG
	21B	X06A X06B X06C
58.39.32↔	01	B03A B03B B03C
	11	L08A L08B
	13	N04C N06A N06B N06C
	21B	X06A X06B X06C
58.39.33↔	01	B03A B03B B03C
	11	L08A L08B
	13	N04C N06A N06B N06C
	21B	X06A X06B X06C
58.39.99↔	01	B03A B03B B03C
	11	L17A L17B
	13	N04C N06A N06B N06C
	21B	X06A X06B X06C
58.41↔		BORP MBOR VAC VAC I VAC II VBOR
	04	E36A E36B
	06	G12A G16A G38A G38B
	11	L08A L08B
	12	M03A M03B
	13	N01D N11A
	14	O02A O02B
	19	U01A U01B
	21B	X06A X06B X06C
58.42↔		BORP MBOR VAC VBOR
	04	E36A E36B
	06	G12A G16A G38A G38B
	11	L08A L08B
	12	M03A M03B
	13	N11A N11B
	14	O02A O02B
	19	U01A U01B
	21B	X06A X06B X06C
58.43.00↔		BORP MBOR VAC VAC I VAC II VBOR
	04	E36A E36B
	06	G12A G16A G38A G38B
	11	L17A L17B
	12	M03A M03B
	13	N04C N06A N06B N06C N11A N11B
	19	U01A U01B
	21B	X06A X06B X06C
58.43.10↔		BORP MBOR VAC VAC I VAC II VBOR
	04	E36A E36B
	06	G12A G16A G38A G38B
	11	L08A L08B
	12	M03A M03B
	13	N04C N06A N06B N06C N11A N11B
	19	U01A
	21B	X06A X06B X06C
58.43.11↔		BORP MBOR VAC VAC I VAC II VBOR
	04	E36A E36B
	06	G12A G16A G38A G38B
	11	L08A L08B
	12	M03A M03B
	13	N04C N06A N06B N06C N11A N11B
	19	U01A
	21B	X06A X06B X06C
58.43.12↔		BORP MBOR VAC VAC I VAC II VBOR
	04	E36A E36B
	06	G12A G16A G38A G38B
	11	L08A L08B
	12	M03A M03B
	13	N04C N06A N06B N06C N11A N11B
	19	U01A
	21B	X06A X06B X06C
58.43.20↔		BORP MBOR VAC VAC I VAC II VBOR
	04	E36A E36B
	06	G12A G16A G38A G38B
	11	L08A L08B
	12	M03A M03B
	13	N04C N06A N06B N06C N11A N11B
	19	U01A U01B
	21B	X06A X06B X06C
58.43.30↔		BORP MBOR VAC VAC I VAC II VBOR
	04	E36A E36B
	06	G12A G16A G38A G38B
	11	L08A L08B
	12	M03A M03B
	13	N04C N06A N06B N06C N11A N11B
	19	U01A U01B
	21B	X06A X06B X06C
58.43.99↔		BORP MBOR VAC VAC I VAC II VBOR
	04	E36A E36B
	06	G12A G16A G38A G38B
	11	L17A L17B
	12	M03A M03B
	13	N04C N06A N06B N06C N11A N11B
	19	U01A U01B
	21B	X06A X06B X06C
58.44↔		BORP MBOR VAC VAC I VAC II VBOR
	04	E36A E36B
	06	G12A G16A G38A G38B
	11	L08A L08B
	12	M03A M03B
	13	N11A N11B
	14	O02A O02B
	19	U01A
	21B	X06A X06B X06C
58.45.00↔		BORP MBOR VAC VAC I VAC II VBOR
	04	E36A E36B
	06	G12A G16A G38A G38B
	10	K09A K09B
	11	L17A L17B
	12	M03A M03B
	13	N11A N11B
	14	O02A O02B
	19	U01A U01B
	21B	X06A X06B X06C
58.45.10↔		BORP MBOR VAC VAC I VAC II VBOR
	04	E36A E36B
	06	G12A G16A G38A G38B
	10	K09A K09B
	11	L08A
	12	M03A M03B
	13	N11A N11B
	14	O02A O02B
	19	U01A
	21B	X06A X06B X06C
58.45.20↔		BORP MBOR VAC VAC I VAC II VBOR
	04	E36A E36B
	06	G12A G16A G38A G38B
	10	K09A K09B
	11	L08A
	12	M03A M03B
	13	N11A N11B
	14	O02A O02B
	19	U01A
	21B	X06A X06B X06C
58.45.21↔		BORP MBOR VAC VAC I VAC II VBOR
	04	E36A E36B
	06	G12A G16A G38A G38B
	10	K09A K09B
	11	L08A
	12	M03A M03B
	13	N11A N11B
	14	O02A O02B
	19	U01A
	21B	X06A X06B X06C
58.45.99↔		BORP MBOR VAC VAC I VAC II VBOR
	04	E36A E36B
	06	G12A G16A G38A G38B
	10	K09A K09B
	11	L08A L17A L17B
	12	M03A M03B
	13	N11A N11B
	14	O02A O02B
	19	U01A
	21B	X06A X06B X06C
58.46.00↔		BORP MBOR VAC VBOR
	04	E36A E36B
	06	G12A G16A G38A G38B
	11	L17A L17B
	12	M03A M03B
	13	N11A N11B
	14	O02A O02B
	19	U01A U01B
	21B	X06A X06B X06C
58.46.10↔		BORP MBOR VAC VAC I VAC II VBOR
	04	E36A E36B
	06	G12A G16A G38A G38B
	11	L08A L08B
	12	M03A M03B
	13	N11A N11B
	14	O02A O02B
	19	U01A U01B
	21B	X06A X06B X06C
58.46.11↔		BORP MBOR VAC VAC I VAC II VBOR

CHOP	MDC	DRG
	04	E36A E36B
	06	G12A G16A G38A G38B
	11	L08A L08B
	12	M03A M03B
	13	N11A N11B
	14	O02A O02B
	19	U01A U01B
	21B	X06A X06B X06C
58.46.99↔		BORP MBOR VAC VBOR
	04	E36A E36B
	06	G12A G16A G38A G38B
	11	L17A L17B
	12	M03A M03B
	13	N11A N11B
	14	O02A O02B
	19	U01A U01B
	21B	X06A X06B X06C
58.47‡↔	01	B60A
	11	L17A L17B
	12	M03A M03B
58.49.10↔		BORP MBOR VAC VAC I VAC II VBOR
	04	E36A E36B
	06	G12A G16A G38A G38B
	11	L08A L17A L17B L20A L20B L20C L20D L20E
	12	M03A M03B M06Z M09A M09B M37Z
	13	N01D N11A
	14	O02A O02B
	19	U01A U01B
	21B	X06A X06B X06C
58.49.11↔		BORP MBOR VAC VAC I VAC II VBOR
	04	E36A E36B
	06	G12A G16A G38A G38B
	11	L08A L17A L17B L20A L20B L20C L20D L20E
	12	M03A M03B M06Z M09A M09B M37Z
	13	N01D N11A
	14	O02A O02B
	19	U01A U01B
	21B	X06A X06B X06C
58.49.20↔		BORP MBOR VAC VAC I VAC II VBOR
	04	E36A E36B
	06	G12A G16A G38A G38B
	11	L08A L17A L17B L20A L20B L20C L20D L20E
	12	M03A M03B M06Z M09A M09B M37Z
	13	N01D N11A
	14	O02A O02B
	19	U01A U01B
	21B	X06A X06B X06C
58.49.21↔		BORP MBOR VAC VAC I VAC II VBOR
	04	E36A E36B
	06	G12A G16A G38A G38B
	11	L08A L17A L17B L20A L20B L20C L20D L20E
	12	M03A M03B M06Z M09A M09B M37Z
	13	N01D N11A
	14	O02A O02B
	19	U01A U01B
	21B	X06A X06B X06C
58.49.29↔		BORP MBOR VAC VAC I VAC II VBOR
	04	E36A E36B
	06	G12A G16A G38A G38B
	11	L08A L17A L17B L20A L20B L20C L20D L20E
	12	M03A M03B M06Z M09A M09B M37Z
	13	N01D N11A
	14	O02A O02B
	19	U01A U01B
	21B	X06A X06B X06C
58.49.30↔		BORP MBOR VAC VAC I VAC II VBOR
	04	E36A E36B
	06	G12A G16A G38A G38B
	11	L08A L20A L20B L20C L20D L20E
	12	M03A M03B M06Z M09A M09B M37Z
	13	N11A N11B
	14	O02A O02B
	19	U01A U01B
	21B	X06A X06B X06C
58.49.31↔		BORP MBOR VAC VAC I VAC II VBOR
	04	E36A E36B
	06	G12A G16A G38A G38B
	11	L08A L20A L20B L20C L20D L20E
	12	M03A M03B M06Z M09A M09B M37Z
	13	N01D N11A
	14	O02A O02B
	19	U01A
	21B	X06A X06B X06C
58.49.33↔		BORP MBOR VAC VAC I VAC II VBOR
	04	E36A E36B
	06	G12A G16A G38A G38B
	11	L08A L20A L20B L20C L20D L20E
	12	M03A M03B M06Z M09A M09B M37Z
	13	N01D N11A
	14	O02A O02B
	19	U01A
	21B	X06A X06B X06C
58.49.39↔		BORP MBOR VAC VAC I VAC II VBOR
	04	E36A E36B
	06	G12A G16A G38A G38B
	11	L08A L20A L20B L20C L20D L20E
	12	M03A M03B M06Z M09A M09B M37Z
	13	N01D N11A
	14	O02A O02B
	19	U01A U01B
	21B	X06A X06B X06C
58.49.40↔		BORP MBOR VAC VBOR
	04	E36A E36B
	06	G12A G16A G38A G38B
	11	L08A L20A L20B L20C L20D L20E
	12	M03A M03B M06Z M09A M09B M37Z
	13	N11A N11B
	14	O02A O02B
	19	U01A U01B
	21B	X06A X06B X06C
58.49.99↔		BORP MBOR VAC VBOR
	04	E36A E36B
	06	G12A G16A G38A G38B
	11	L08A L08B L17A L17B L20A L20B L20C L20D L20E
	12	M03A M03B M06Z M09A M09B M37Z
	13	N11A N11B
	14	O02A O02B
	19	U01A U01B
	21B	X06A X06B X06C
58.5X.10↔	01	B03A B03B B03C
	11	L17A L17B
	12	M06Z M09A M09B M37Z
	13	N08Z N11A N11B
	21B	X06A X06B X06C
58.5X.20↔	01	B03A B03B B03C
	11	L17A L17B
	12	M06Z M09A M09B M37Z
	13	N08Z N11A N11B
	21B	X06A X06B X06C
58.5X.99↔	01	B03A B03B B03C
	11	L17A L17B
	12	M06Z M09A M09B M37Z
	13	N08Z N11A N11B
	21B	X06A X06B X06C
58.91↔	01	B03A B03B B03C
	11	L17A L17B
	13	N11A N11B
	21B	X06A X06B X06C
58.92↔	01	B03A B03B B03C
	11	L08A L08B
	13	N11A N11B
	21B	X06A X06B X06C
58.93.00‡↔	01	B60A
	11	L20A L20B L20C L20D L20E L42A L60A L60C L63A L70B
	12	M06Z M09A M09B M37Z
58.93.11↔		BORP KORP MBOR MKOR VAC VAC I VAC II VBOR VKOR
	01	B03A B03B B03C
	04	E36A E36B

PROC

PROC

CHOP	MDC	DRG
	06	G12A G16A G38A G38B
	11	L03Z L04A L10A L10B L13A L13B L13C L38Z
	12	M01Z
	13	N04C N06A N06B N06C
	21B	X06A X06B X06C
58.93.21‡↔	01	B60A
	11	L20A L20B L20C L20D L20E L42A L60A L60C L63A L70B
	12	M06Z M09A M09B M37Z
58.93.31‡↔	01	B60A
	11	L20A L20B L20C L20D L20E L42A L60A L60C L63A L70B
	12	M06Z M09A M09B M37Z
58.93.99‡↔	01	B60A
	11	L20A L20B L20C L20D L20E L42A L60A L60C L63A L70B
	12	M06Z M09A M09B M37Z
58.94.00↔		BORP MBOR VAC VAC I VAC II VBOR
	04	E36A E36B
	06	G12A G16A G38A G38B
	11	L03Z L04A L04B L10A L10B L13A L13B L13C L38Z
	12	M01Z
	13	N04C N06A N06B N06C
	21B	X06A X06B X06C
58.94.11↔		BORP MBOR VAC VAC I VAC II VBOR
	04	E36A E36B
	06	G12A G16A G38A G38B
	11	L03Z L04A L04B L10A L10B L13A L13B L13C L38Z
	12	M01Z
	13	N04C N06A N06B N06C
	21B	X06A X06B X06C
58.94.21↔		BORP MBOR VAC VAC I VAC II VBOR
	04	E36A E36B
	06	G12A G16A G38A G38B
	11	L03Z L04A L04B L10A L10B L13A L13B L13C L38Z
	12	M01Z
	13	N04C N06A N06B N06C
	21B	X06A X06B X06C
58.94.31↔		BORP MBOR VAC VAC I VAC II VBOR
	04	E36A E36B
	06	G12A G16A G38A G38B
	11	L03Z L04A L04B L10A L10B L13A L13B L13C L38Z
	12	M01Z
	13	N04C N06A N06B N06C
	21B	X06A X06B X06C
58.94.99↔		BORP MBOR VAC VAC I VAC II VBOR
	04	E36A E36B
	06	G12A G16A G38A G38B
	11	L03Z L04A L04B L10A L10B L13A L13B L13C L38Z
	12	M01Z
	13	N04C N06A N06B N06C
	21B	X06A X06B X06C
58.99.00‡↔	01	B60A
	11	L20A L20B L20C L20D L20E L42A L60A L60C L63A L70B
	12	M06Z M09A M09B M37Z
58.99.10‡↔	01	B60A
	11	L20A L20B L20C L20E L42A L60A L60C L63A L70B
	12	M06Z M09A M09B M37Z
58.99.99‡↔	01	B60A
	11	L20A L20B L20C L20D L20E L42A L60A L60C L63A L70B
	12	M06Z M09A M09B M37Z
59.00↔		BORP MBOR VAC VAC I VAC II VBOR
	04	E36A E36B
	06	G12A G12B G16A G16B G38A G38B
	07	H06Z
	10	K09A K09B
	11	L03Z L04A L04B L10A L10B L13A L13B L13C L38Z
	12	M06Z M09A M09B M37Z
	13	N11A N11B
	21B	X06A X06B X06C
59.02↔		BORP MBOR VAC VAC I VAC II VBOR
	04	E36A E36B
	06	G12A G16A G21A G21B G21C G38A G38B
	07	H06Z H07C
	11	L03Z L04A L04B L06A L06B L09A L09B L10A L10B L13A L13B L13C L20A L20B L20C L20D L20E L38Z
	12	M04A M04B M04C M06Z M09A M09B M37Z
	13	N02A N02B N02C N04A N04B N04C N06B N33Z
	21B	X06A X06B X06C
59.03.00↔		BORP MBOR VAC VAC I VAC II VBOR
	04	E36A E36B
	06	G12A G16A G21A G21B G21C G38A G38B
	07	H06Z H07C
	11	L03Z L04A L04B L06A L06B L09A L09B L10A L10B L13A L13B L13C L20A L20B L20C L20D L20E L38Z
	12	M04A M04B M04C M06Z M09A M09B M37Z
	13	N02A N02B N02C N04A N04B N04C N06B N33Z
	21B	X06A X06B X06C
59.03.10↔		BORP MBOR VAC VAC I VAC II VBOR
	04	E36A E36B
	06	G12A G16A G38A G38B
	11	L03Z L04A L04B L10A L10B L13A L13B L13C L38Z
	12	M06Z M09A M09B M37Z
	13	N02A N02B N02C N04A N04B N04C N06B N33Z
	21B	X06A X06B X06C
59.03.11↔		BORP MBOR VAC VAC I VAC II VBOR
	04	E36A E36B
	06	G12A G16A G38A G38B
	11	L03Z L04A L04B L10A L10B L13A L13B L13C L38Z
	12	M06Z M09A M09B M37Z
	13	N02A N02B N02C N04A N04B N04C N06B N33Z
	21B	X06A X06B X06C
59.03.99↔		BORP MBOR VAC VAC I VAC II VBOR
	04	E36A E36B
	06	G12A G16A G21A G21B G21C G38A G38B
	07	H06Z H07C
	11	L03Z L04A L04B L06A L06B L09A L09B L10A L10B L13A L13B L13C L20A L20B L20C L20D L20E L38Z
	12	M04A M04B M04C M06Z M09A M09B M37Z
	13	N02A N02B N02C N04A N04B N04C

CHOP	MDC	DRG
		N06B N33Z
	21B	X06A X06B X06C
59.09↔		BORP MBOR VAC VBOR
	04	E36A E36B
	06	G12A G16A G38A G38B
	11	L03Z L04A L04B L10A L10B L13A L13B L13C L38Z
	12	M06Z M09A M09B M37Z
	13	N11A N11B
	21B	X06A X06B X06C
59.11↔		BORP MBOR VAC VAC I VAC II VBOR
	04	E36A E36B
	06	G12A G16A G21A G21B G21C G38A G38B
	07	H06Z H07C
	11	L03Z L04A L04B L06A L06B L09A L09B L10A L10B L13A L13B L13C L20A L20B L20C L20D L20E L38Z
	12	M04A M04B M04C M06Z M09A M09B M37Z
	13	N02A N02B N02C N04A N04B N04C N06B N33Z
	21B	X06A X06B X06C
59.12↔		BORP MBOR VAC VAC I VAC II VBOR
	04	E36A E36B
	06	G12A G16A G21A G21B G21C G38A G38B
	07	H06Z H07C
	11	L03Z L04A L04B L06A L06B L09A L09B L10A L10B L13A L13B L13C L20A L20B L20C L20D L20E L38Z
	12	M04A M04B M04C M06Z M09A M09B M37Z
	13	N02A N02B N02C N04A N04B N04C N06B N33Z
	21B	X06A X06B X06C
59.19↔	06	G12A G12B
	07	H06Z
	10	K09A K09B
	11	L03Z L04A L04B L06A L06B L10A L10B L13A L13B L13C L38Z
	12	M06Z M09A M09B M37Z
	13	N11A N11B
	21B	X06A X06B X06C
59.21↔		BORP MBOR VAC VAC I VAC II VBOR
	04	E36A E36B
	06	G12A G16A G38A G38B
	11	L06A L06B
	12	M06Z M09A M09B M37Z
	21B	X06A X06B X06C
59.3↔		BORP MBOR VAC VAC I VAC II VBOR
	04	E36A E36B
	06	G12A G16A G38A G38B
	11	L06A L06B
	13	N13Z
59.4↔		BORP MBOR VAC VAC I VAC II VBOR
	04	E36A E36B
	06	G12A G16A G38A G38B
	11	L06A L06B
	13	N23A N23B
59.5↔		BORP MBOR VAC VAC I VAC II VBOR
	04	E36A E36B
	06	G12A G16A G38A G38B
	11	L06A L06B
	13	N13Z N23A N23B
59.6↔		BORP MBOR VAC VAC I VAC II VBOR
	04	E36A E36B
	06	G12A G16A G38A G38B
	11	L06A L06B
	13	N04C N06A N06B N06C
59.71↔		BORP MBOR VAC VAC I VAC II VBOR
	04	E36A E36B
	06	G12A G16A G38A G38B
	11	L06A L06B
	13	N04C N06A N06B N06C
59.72↔		BORP MBOR VAC VAC I VAC II VBOR
	04	E36A E36B
	06	G12A G16A G38A G38B
	11	L06A L06B
	12	M06Z M09A M09B M37Z
	13	N13Z
59.73.00↔		BORP MBOR VAC VBOR
	04	E36A E36B
	06	G12A G16A G38A G38B
	11	L06A L06B
	13	N23A N23B
59.73.10↔		BORP MBOR VAC VBOR
	04	E36A E36B
	06	G12A G16A G38A G38B
	11	L06A L06B
	13	N23A N23B
59.73.11↔		BORP MBOR VAC VBOR
	04	E36A E36B
	06	G12A G16A G38A G38B
	11	L06A L06B
	13	N23A N23B
59.73.12↔		BORP MBOR VAC VBOR
	04	E36A E36B
	06	G12A G16A G38A G38B
	11	L06A L06B
	13	N23A N23B
59.73.19↔		BORP MBOR VAC VBOR
	04	E36A E36B
	06	G12A G16A G38A G38B
	11	L06A L06B
	13	N23A N23B
59.73.99↔		BORP MBOR VAC VBOR
	04	E36A E36B
	06	G12A G16A G38A G38B
	11	L06A L06B
	13	N23A N23B
59.74↔		BORP MBOR VAC VBOR
	01	B03A B03B B03C
	04	E36A E36B
	06	G12A G16A G38A G38B
	11	L06A L06B
	12	M06Z M09A M09B M37Z
59.79↔		BORP MBOR VAC VBOR
	01	B03A B03B B03C
	04	E36A E36B
	06	G12A G16A G38A G38B
	11	L06A L06B
	13	N23A N23B
59.8X.10‡↔	01	B60A
	11	L20B L42A L60A L60C L63A L63C L64B L70A
59.8X.11‡↔	01	B60A
	11	L20B L42A L60A L60C L63A L63C L64B L70A
59.8X.12‡↔	01	B60A
	11	L20B L42A L60A L60C L63A L63C L64B L70A
59.8X.99‡↔	01	B60A
	11	L20B L42A L60A L60C L63A L63C L64B L70A
59.91↔		BORP MBOR VAC VBOR
	01	B03A B03B B03C
	04	E36A E36B
	06	G12A G12B G16A G16B G38A G38B
	07	H06Z
	10	K09A K09B
	11	L03Z L04A L04B L10A L10B L13A L13B L13C L38Z
	12	M06Z M09A M09B M37Z
	13	N02A N02B N02C N04C N07A N07B

PROC

PROC

CHOP	MDC	DRG
		N11A N11B N25A N25B N33Z
	21B	X06A X06B X06C
59.92↔		BORP MBOR VAC VBOR
	01	B03A B03B B03C
	04	E36A E36B
	06	G12A G12B G16A G16B G38A G38B
	07	H06Z
	10	K09A K09B
	11	L03Z L04A L04B L10A L10B L13A L13B L13C L38Z
	12	M06Z M09A M09B M37Z
	13	N02A N02B N02C N04C N07A N07B N11A N11B N25A N25B N33Z
	21B	X06A X06B X06C
59.93‡↔	01	B60A
	11	L42A L60A L60C L63A L63C L64B L70B
59.95↔		BORP MBOR VAC VBOR
	01	B03A B03B B03C
	04	E36A E36B
	06	G12A G16A G38A G38B
	11	L20A L20B L20C L20D L20E
	21B	X06A X06B X06C
59.99↔		BORP MBOR VAC VBOR
	01	B03A B03B B03C
	04	E36A E36B
	06	G12A G16A G38A G38B
	11	L06A L06B
	12	M06Z M09A M09B M37Z
	13	N11A N11B
	21B	X06A X06B X06C
60.0↔		BORP MBOR VAC VBOR
	04	E36A E36B
	06	G12A G16A G38A G38B
	12	M06Z M09A M09B M37Z
60.11‡↔		AKBB
	01	B60A
	16	Q86A
60.12↔	12	M06Z M09A M09B M37Z
60.13‡↔		AKBB
	01	B60A
	16	Q86A
60.14↔	12	M06Z M09A M09B M37Z
60.20↔		BORP MBOR VAC VAC I VAC II VBOR
	04	E36A E36B
	06	G12A G16A G38A G38B
	12	M06Z M09A M09B M11A M11B M11C M37Z
	19	U01A U01B
60.21.11↔		BORP MBOR VAC VAC I VAC II VBOR
	04	E36A E36B
	06	G12A G16A G38A G38B
	12	M06Z M09A M09B M11A M11B M37Z
60.21.12↔		BORP MBOR VAC VAC I VAC II VBOR
	04	E36A E36B
	06	G12A G16A G38A G38B
	12	M06Z M09A M09B M11A M11B M37Z
60.22↔		BORP MBOR VAC VAC I VAC II VBOR
	04	E36A E36B
	06	G12A G16A G38A G38B
	12	M06Z M09A M09B M11A M11B M11C M37Z
	19	U01A U01B
60.29↔		BORP MBOR VAC VAC I VAC II VBOR
	04	E36A E36B
	06	G12A G16A G38A G38B
	12	M06Z M09A M09B M11A M11B M11C M37Z
	19	U01A U01B
60.3↔		BORP MBOR VAC VAC I VAC II VBOR
	04	E36A E36B
	06	G12A G16A G38A G38B
	11	L03Z L04A L04B L10A L10B L13A L13B L13C L38Z
	12	M01Z M09A M37Z
	19	U01A U01B
60.4↔		BORP MBOR VAC VAC I VAC II VBOR
	04	E36A E36B
	06	G12A G16A G38A G38B
	11	L03Z L04A L04B L10A L10B L13A L13B L13C L38Z
	12	M01Z M09A M37Z
	19	U01A U01B
60.5X.00↔		BORP MBOR VAC VAC I VAC II VBOR
	04	E36A E36B
	06	G12A G16A G16B G38A G38B
	11	L03Z L04A L04B L10A L10B L13A L13B L13C L38Z
	12	M01Z
	19	U01A U01B
60.5X.10↔		BORP MBOR MVE VAC VAC I VAC II VBOR
	04	E36A E36B
	06	G12A G16A G16B G38A G38B
	11	L03Z L04A L04B L10A L10B L13A L13B L13C L38Z
	12	M01Z
	19	U01A U01B
60.5X.20↔		BORP MBOR MVE VAC VAC I VAC II VBOR
	04	E36A E36B
	06	G12A G16A G16B G38A G38B
	11	L03Z L04A L04B L10A L10B L13A L13B L13C L38Z
	12	M01Z
	19	U01A U01B
60.5X.30↔		BORP MBOR MVE VAC VAC I VAC II VBOR
	04	E36A E36B
	06	G12A G16A G16B G38A G38B
	11	L03Z L04A L04B L10A L10B L13A L13B L13C L38Z
	12	M01Z
	19	U01A U01B
60.5X.99↔		BORP MBOR MVE VAC VAC I VAC II VBOR
	04	E36A E36B
	06	G12A G16A G16B G38A G38B
	11	L03Z L04A L04B L10A L10B L13A L13B L13C L38Z
	12	M01Z
	19	U01A U01B
60.61.00↔		BORP MBOR VAC VBOR
	04	E36A E36B
	06	G12A G16A G38A G38B
	11	L03Z L04A L04B L10A L10B L13A L13B L13C L20A L20B L20C L20D L20E L38Z
	12	M01Z M06Z M09A M09B M37Z
60.61.10↔		BORP MBOR VAC VBOR
	04	E36A E36B
	06	G12A G16A G38A G38B
	11	L03Z L04A L04B L10A L10B L13A L13B L13C L20A L20B L20C L20D L20E L38Z
	12	M01Z M06Z M09A M09B M37Z
60.61.11↔		BORP MBOR VAC VBOR
	04	E36A E36B
	06	G12A G16A G38A G38B
	11	L03Z L04A L04B L10A L10B L13A L13B L13C L20A L20B L20C L20D

CHOP	MDC	DRG
		L20E L38Z
	12	M01Z M06Z M09A M09B M37Z
60.61.12↔		BORP MBOR VAC VBOR
	04	E36A E36B
	06	G12A G16A G38A G38B
	11	L03Z L04A L04B L10A L10B L13A L13B L13C L20A L20B L20C L20D L20E L38Z
	12	M01Z M06Z M09A M09B M37Z
60.61.13↔		BORP MBOR VAC VBOR
	04	E36A E36B
	06	G12A G16A G38A G38B
	11	L03Z L04A L04B L10A L10B L13A L13B L13C L20A L20B L20C L20D L20E L38Z
	12	M01Z M06Z M09A M09B M37Z
60.61.99↔		BORP MBOR VAC VBOR
	04	E36A E36B
	06	G12A G16A G38A G38B
	11	L03Z L04A L04B L10A L10B L13A L13B L13C L20A L20B L20C L20D L20E L38Z
	12	M01Z M06Z M09A M09B M37Z
60.62↔		BORP MBOR VAC VAC I VAC II VBOR
	04	E36A E36B
	06	G12A G16A G38A G38B
	11	L03Z L04A L04B L10A L10B L13A L13B L13C L38Z
	12	M01Z
60.69↔		BORP MBOR VAC VAC I VAC II VBOR
	04	E36A E36B
	06	G12A G16A G38A G38B
	11	L03Z L04A L04B L10A L10B L13A L13B L13C L38Z
	12	M01Z
60.72↔		BORP MBOR VAC VBOR
	04	E36A E36B
	06	G12A G16A G38A G38B
	12	M06Z M09A M09B M37Z
60.73↔		BORP MBOR VAC VBOR
	04	E36A E36B
	06	G12A G16A G38A G38B
	12	M06Z M09A M09B M37Z
60.79↔		BORP MBOR VAC VBOR
	04	E36A E36B
	06	G12A G16A G38A G38B
	12	M06Z M09A M09B M37Z
60.81↔		BORP MBOR VAC VBOR
	04	E36A E36B
	06	G12A G16A G38A G38B
	12	M06Z M09A M09B M37Z
60.82↔		BORP MBOR VAC VBOR
	04	E36A E36B
	06	G12A G16A G38A G38B
	12	M06Z M09A M09B M37Z
60.93↔		BORP MBOR VAC VBOR
	04	E36A E36B
	06	G12A G16A G38A G38B
	12	M06Z M09A M09B M37Z
	21B	X06A X06B X06C
60.95↔	11	L20A L20B L20C L20D L20E
	12	M06Z M09A M09B M37Z
60.96↔		BORP MBOR VAC VBOR
	04	E36A E36B
	06	G12A G16A G38A G38B
	12	M06Z M09A M09B M37Z
60.97↔		BORP MBOR VAC VBOR
	04	E36A E36B
	06	G12A G16A G38A G38B
	12	M06Z M09A M09B M37Z
60.99.00↔	11	L17A L17B
	12	M06Z M09A M09B M37Z
60.99.09↔	11	L17A L17B
	12	M06Z M09A M09B M37Z
60.99.10↔	11	L17A L17B
	12	M06Z M09A M09B M37Z
60.99.11↔	11	L17A L17B
	12	M06Z M09A M09B M37Z
60.99.21↔	11	L17A L17B
	12	M06Z M09A M09B M37Z
60.99.22↔	11	L17A L17B
	12	M06Z M09A M09B M37Z
60.99.31↔	11	L20A L20B L20C L20D L20E
	12	M06Z M09A M09B M37Z
60.99.41↔	11	L17A L17B
	12	M06Z M09A M09B M37Z
60.99.52↔	11	L17A L17B
	12	M06Z M09A M09B M37Z
61.0X.00↔		BORP MBOR VAC VBOR
	04	E36A E36B
	06	G12A G16A G26A G26B G38A G38B
	12	M04A M04B M04C M09A M09B M37Z
	21B	X06A X06B X06C
61.0X.10↔		BORP MBOR VAC VBOR
	04	E36A E36B
	06	G12A G16A G26A G26B G38A G38B
	11	L09A L09B
	12	M04A M04B M04C M09A M09B M37Z
	21B	X06A X06B X06C
61.0X.99↔		BORP MBOR VAC VBOR
	04	E36A E36B
	06	G12A G16A G26A G26B G38A G38B
	12	M04A M04B M04C M09A M09B M37Z
	21B	X06A X06B X06C
61.11.10‡↔		AKBB
	01	B60A
	10	K09A K09B
	12	M04A M04B M04C
	16	Q86A
61.11.11‡↔		AKBB
	01	B60A
	10	K09A K09B
	12	M04A M04B M04C
	16	Q86A
61.11.99‡↔		AKBB
	01	B60A
	10	K09A K09B
	12	M04A M04B M04C
	16	Q86A
61.2↔		BORP MBOR VAC VBOR
	04	E36A E36B
	06	G12A G16A G38A G38B
	12	M04A M04B M04C M09A M09B M37Z
61.3X.00↔		BORP MBOR VAC VBOR
	04	E36A E36B
	06	G12A G16A G38A G38B
	09	J11A J11B
	10	K09A K09B
	12	M04A M04B M04C M09A M09B M37Z
	21B	X06A X06B X06C
61.3X.10↔		BORP MBOR VAC VBOR
	04	E36A E36B
	06	G12A G16A G38A G38B
	09	J11A J11B
	10	K09A K09B

PROC

CHOP	MDC	DRG
	12	M04A M04B M04C M09A M09B M37Z
	21B	X06A X06B X06C
61.3X.11↔		BORP MBOR VAC VBOR
	04	E36A E36B
	06	G12A G16A G38A G38B
	09	J11A J11B
	10	K09A K09B
	12	M04A M04B M04C M09A M09B M37Z
	19	U01A U01B
	21B	X06A X06B X06C
61.3X.12↔		BORP MBOR VAC VBOR
	04	E36A E36B
	06	G12A G16A G38A G38B
	09	J11A J11B
	10	K09A K09B
	12	M04A M04B M04C M09A M09B M37Z
	19	U01A U01B
	21B	X06A X06B X06C
61.3X.99↔		BORP MBOR VAC VBOR
	04	E36A E36B
	06	G12A G16A G38A G38B
	09	J11A J11B
	10	K09A K09B
	11	L09A L09B
	12	M04A M04B M04C M09A M09B M37Z
	21B	X06A X06B X06C
61.42↔		BORP MBOR VAC VAC I VAC II VBOR
	04	E36A E36B
	06	G12A G16A G38A G38B
	10	K09A K09B
	12	M04A M04B M04C M09A M09B M37Z
	19	U01A U01B
	21B	X06A X06B X06C
61.49↔		BORP MBOR VAC VAC I VAC II VBOR
	04	E36A E36B
	06	G12A G16A G38A G38B
	10	K09A K09B
	12	M04A M04B M04C M09A M09B M37Z
	19	U01A U01B
	21B	X06A X06B X06C
61.92↔		BORP MBOR VAC VAC I VAC II VBOR
	04	E36A E36B
	06	G12A G16A G38A G38B
	10	K09A K09B
	12	M04A M04B M04C M09A M09B M37Z
	21B	X06A X06B X06C
61.99↔		BORP MBOR VAC VBOR
	04	E36A E36B
	06	G12A G16A G38A G38B

CHOP	MDC	DRG
	12	M04A M04B M04C M09A M09B M37Z
	21B	X06A X06B X06C
62.0↔		BORP MBOR VAC VBOR
	04	E36A E36B
	06	G12A G16A G38A G38B
	12	M04A M04B M04C
	21B	X06A X06B X06C
62.11‡↔		AKBB
	01	B60A
	10	K09A K09B
	12	M04A M04B M04C
	16	Q86A
62.12↔	10	K09A K09B
	12	M04A M04B M04C
62.2↔		BORP MBOR VAC VBOR
	04	E36A E36B
	06	G12A G16A G38A G38B
	10	K09A K09B
	12	M04A M04B M04C M09A M09B M37Z
	21B	X06A X06B X06C
62.3X.00↔		BORP MBOR VAC VAC I VAC II VBOR
	04	E36A E36B
	06	G12A G16A G38A G38B
	08	I28A I28B
	10	K09A K09B
	12	M04A M04B M04C
	21B	X06A X06B X06C
	22	Y02A Y02B Y02C
62.3X.10↔		BORP MBOR VAC VAC I VAC II VBOR
	04	E36A E36B
	06	G12A G16A G38A G38B
	08	I28A I28B
	10	K09A K09B
	12	M04A M04B M04C
	21B	X06A X06B X06C
	22	Y02A Y02B Y02C
62.3X.11↔		BORP MBOR VAC VAC I VAC II VBOR
	04	E36A E36B
	06	G12A G16A G38A G38B
	08	I28A I28B
	10	K09A K09B
	12	M04A M04B M04C
	21B	X06A X06B X06C
	22	Y02A Y02B Y02C
62.3X.20↔		BORP MBOR VAC VAC I VAC II VBOR
	04	E36A E36B
	06	G12A G16A G38A G38B
	08	I28A I28B
	10	K09A K09B
	12	M04A M04B M04C
	21B	X06A X06B X06C
	22	Y02A Y02B Y02C
62.3X.21↔		BORP MBOR VAC VAC I VAC II VBOR
	04	E36A E36B
	06	G12A G16A G38A

CHOP	MDC	DRG
		G38B
	08	I28A I28B
	10	K09A K09B
	12	M04A M04B M04C
	21B	X06A X06B X06C
	22	Y02A Y02B Y02C
62.3X.30↔		BORP MBOR VAC VAC I VAC II VBOR
	04	E36A E36B
	06	G12A G16A G38A G38B
	08	I28A I28B
	10	K09A K09B
	12	M04A M04B M04C
	21B	X06A X06B X06C
	22	Y02A Y02B Y02C
62.3X.31↔		BORP MBOR VAC VAC I VAC II VBOR
	04	E36A E36B
	06	G12A G16A G38A G38B
	08	I28A I28B
	10	K09A K09B
	12	M04A M04B M04C
	21B	X06A X06B X06C
	22	Y02A Y02B Y02C
62.3X.40↔		BORP MBOR VAC VAC I VAC II VBOR
	04	E36A E36B
	06	G12A G16A G38A G38B
	08	I28A I28B
	10	K09A K09B
	12	M04A M04B M04C
	21B	X06A X06B X06C
	22	Y02A Y02B Y02C
62.3X.99↔		BORP MBOR VAC VAC I VAC II VBOR
	04	E36A E36B
	06	G12A G16A G38A G38B
	08	I28A I28B
	10	K09A K09B
	12	M04A M04B M04C
	21B	X06A X06B X06C
	22	Y02A Y02B Y02C
62.41↔		BORP MBOR VAC VAC I VAC II VBOR
	04	E36A E36B
	06	G12A G16A G38A G38B
	08	I28A I28B
	10	K09A K09B
	12	M04A M04B M04C
	19	U01A U01B
	21B	X06A X06B X06C
	22	Y02A Y02B Y02C
62.42↔		BORP MBOR VAC VAC I VAC II VBOR
	04	E36A E36B
	06	G12A G16A G38A G38B
	10	K09A K09B
	12	M04A M04B M04C
	19	U01A U01B
	21B	X06A X06B X06C
	22	Y02A Y02B Y02C
62.5↔		BORP MBOR VAC VBOR
	04	E36A E36B

CHOP	MDC	DRG
	06	G12A G16A G38A G38B
	10	K09A K09B
	12	M04A M04B M04C
	21B	X06A X06B X06C
62.61↔		BORP MBOR VAC VBOR
	04	E36A E36B
	06	G12A G16A G38A G38B
	12	M04A M04B M04C
	21B	X06A X06B X06C
	22	Y02A Y02B Y02C
62.69↔		BORP MBOR VAC VBOR
	04	E36A E36B
	06	G12A G16A G38A G38B
	10	K09A K09B
	12	M04A M04B M04C
	21B	X06A X06B X06C
	22	Y02A Y02B Y02C
62.7‡↔	01	B60A
	12	M04A M04B M04C
62.99.20↔		BORP MBOR VAC VAC I VAC II VBOR
	04	E36A E36B
	06	G12A G16A G38A G38B
	10	K09A K09B
	12	M01Z M04A M04B M04C M06Z M09A M09B M37Z
62.99.30↔		BORP MBOR VAC VBOR
	04	E36A E36B
	06	G12A G16A G38A G38B
	10	K09A K09B
	12	M01Z M04A M04B M04C M06Z M09A M09B M37Z
63.01‡↔		AKBB
	01	B60A
	16	Q86A
63.1↔		BORP MBOR VAC VAC I VAC II VBOR
	04	E36A E36B
	06	G12A G16A G38A G38B
	12	M04A M04B M04C
63.2↔		BORP MBOR VAC VAC I VAC II VBOR
	04	E36A E36B
	06	G12A G16A G38A G38B
	12	M04A M04B M04C
63.3↔		BORP MBOR VAC VAC I VAC II VBOR
	04	E36A E36B
	06	G12A G16A G38A G38B
	12	M04A M04B M04C
63.4↔		BORP MBOR VAC VAC I VAC II VBOR
	04	E36A E36B
	06	G12A G16A G38A G38B
	12	M04A M04B M04C
63.51↔		BORP MBOR VAC VAC I VAC II VBOR
	04	E36A E36B
	06	G12A G16A G38A G38B
	12	M04A M04B M04C
	21B	X06A X06B X06C
63.52‡↔	01	B60A
	12	M04A M04B M04C
63.53↔		BORP MBOR VAC VAC I VAC II VBOR
	04	E36A E36B
	06	G12A G16A G38A G38B
	12	M04A M04B M04C
	21B	X06A X06B X06C
63.59↔		BORP MBOR VAC VAC I VAC II VBOR
	04	E36A E36B
	06	G12A G16A G38A G38B
	12	M04A M04B M04C
	21B	X06A X06B X06C
63.81↔		BORP MBOR VAC VAC I VAC II VBOR
	04	E36A E36B
	06	G12A G16A G38A G38B
	12	M04A M04B M04C
	21B	X06A X06B X06C
63.82↔		BORP MBOR VAC VAC I VAC II VBOR
	04	E36A E36B
	06	G12A G16A G38A G38B
	12	M04A M04B M04C
	21B	X06A X06B X06C
63.83↔		BORP MBOR VAC VAC I VAC II VBOR
	04	E36A E36B
	06	G12A G16A G38A G38B
	12	M04A M04B M04C
63.84↔		BORP MBOR VAC VAC I VAC II VBOR
	04	E36A E36B
	06	G12A G16A G38A G38B
	12	M04A M04B M04C
63.85↔		BORP MBOR VAC VAC I VAC II VBOR
	04	E36A E36B
	06	G12A G16A G38A G38B
	12	M04A M04B M04C
63.89↔		BORP MBOR VAC VAC I VAC II VBOR
	04	E36A E36B
	06	G12A G16A G38A G38B
	12	M04A M04B M04C
	21B	X06A X06B X06C
63.92↔		BORP MBOR VAC VAC I VAC II VBOR
	04	E36A E36B
	06	G12A G16A G38A G38B
	12	M04A M04B M04C
63.93↔		BORP MBOR VAC VAC I VAC II VBOR
	04	E36A E36B
	06	G12A G16A G38A G38B
	12	M04A M04B M04C
63.94↔		BORP MBOR VAC VAC I VAC II VBOR
	04	E36A E36B
	06	G12A G16A G21A G21B G21C G38A G38B
	07	H06Z H07C
	11	L03Z L04A L04B L06A L06B L09A L09B L10A L10B L13A L13B L13C L20A L20B L20C L20D L20E L38Z
	12	M04A M04B M04C M06Z M09A M09B M37Z
	21B	X06A X06B X06C
63.95↔		BORP MBOR VAC VAC I VAC II VBOR
	04	E36A E36B
	06	G12A G16A G38A G38B
	12	M04A M04B M04C
63.99↔		BORP MBOR VAC VBOR
	04	E36A E36B
	06	G12A G16A G38A G38B
	12	M04A M04B M04C
64.0‡↔	01	B60A
	12	M05Z
64.11.10‡↔		AKBB
	01	B60A
	16	Q86A
64.11.11‡↔		AKBB
	01	B60A
	16	Q86A
64.11.99‡↔		AKBB
	01	B60A
	16	Q86A
64.2‡↔	01	B60A
	12	M05Z
64.3X.00↔		BORP MBOR VAC VAC I VAC II VBOR
	04	E36A E36B
	06	G12A G16A G38A G38B
	10	K09A K09B
	12	M03A M03B
	19	U01A U01B
	21B	X06A X06B X06C
	22	Y02A Y02B Y02C
64.3X.10↔		BORP MBOR VAC VAC I VAC II VBOR
	04	E36A E36B
	06	G12A G16A G38A G38B
	10	K09A K09B
	12	M03A M03B
	19	U01A U01B
	21B	X06A X06B X06C
	22	Y02A Y02B Y02C
64.3X.11↔		BORP MBOR VAC VAC I VAC II VBOR
	04	E36A E36B
	06	G12A G16A G38A G38B

PROC

PROC

CHOP	MDC	DRG
	10	K09A K09B
	12	M03A M03B
	19	U01A
	21B	X06A X06B X06C
	22	Y02A Y02B Y02C
64.3X.12↔		BORP MBOR VAC VAC I VAC II VBOR
	04	E36A E36B
	06	G12A G16A G38A G38B
	10	K09A K09B
	12	M03A M03B
	19	U01A U01B
	21B	X06A X06B X06C
	22	Y02A Y02B Y02C
64.3X.99↔		BORP MBOR VAC VAC I VAC II VBOR
	04	E36A E36B
	06	G12A G16A G38A G38B
	10	K09A K09B
	12	M03A M03B
	19	U01A U01B
	21B	X06A X06B X06C
	22	Y02A Y02B Y02C
64.41↔		BORP MBOR VAC VBOR
	04	E36A E36B
	06	G12A G16A G38A G38B
	09	J02A J02B J03A J03B J04Z J11A J11B
	12	M03A M03B
	19	U01A U01B
	21B	X06A X06B X06C
64.42↔		BORP MBOR VAC VBOR
	04	E36A E36B
	06	G12A G16A G38A G38B
	12	M03A M03B
	19	U01A U01B
	21B	X06A X06B X06C
64.43↔		BORP MBOR VAC VAC I VAC II VBOR
	04	E36A E36B
	06	G12A G16A G38A G38B
	09	J02A J02B J03A J03B J04Z J11A J11B
	12	M03A M03B
	19	U01A
	21B	X06A X06B X06C
	22	Y02A Y02B Y02C
64.44.00↔		BORP MBOR VAC VBOR
	04	E36A E36B
	06	G12A G16A G38A G38B
	09	J02A J02B J03A J03B J04Z J11A J11B
	12	M03A M03B
	19	U01A U01B
	21B	X06A X06B X06C
	22	Y02A Y02B Y02C
64.44.10↔		BORP MBOR VAC VAC I VAC II VBOR
	04	E36A E36B
	06	G12A G16A G38A G38B
	09	J02A J02B J03A J03B J04Z J11A J11B
	12	M03A M03B
	19	U01A
	21B	X06A X06B X06C
	22	Y02A Y02B Y02C
64.44.11↔		BORP MBOR VAC VAC I VAC II VBOR
	04	E36A E36B
	06	G12A G16A G38A G38B
	09	J02A J02B J03A J03B J04Z J11A J11B
	12	M03A M03B
	19	U01A
	21B	X06A X06B X06C
	22	Y02A Y02B Y02C
64.44.99↔		BORP MBOR VAC VBOR
	04	E36A E36B
	06	G12A G16A G38A G38B
	09	J02A J02B J03A J03B J04Z J11A J11B
	12	M03A M03B
	19	U01A U01B
	21B	X06A X06B X06C
	22	Y02A Y02B Y02C
64.45↔		BORP MBOR VAC VAC I VAC II VBOR
	04	E36A E36B
	06	G12A G16A G38A G38B
	09	J02A J02B J03A J03B J04Z J11A J11B
	12	M03A M03B
	19	U01A
	21B	X06A X06B X06C
	22	Y02A Y02B Y02C
64.49‡↔	01	B60A
	12	M05Z
	19	U01A U01B
64.51↔		BORP KORP MBOR MKOR VAC VAC I VAC II VBOR VKOR
	04	E36A E36B
	06	G12A G16A G38A G38B
	10	K09A K09B
	12	M03A M03B
	19	U01A U01B
64.52↔		BORP KORP MBOR MKOR VAC VAC I VAC II VBOR VKOR
	04	E36A E36B
	06	G12A G16A G38A G38B
	10	K09A K09B
	12	M03A M03B
	19	U01A U01B
64.59↔		BORP KORP MBOR MKOR VAC VAC I VAC II VBOR VKOR
	04	E36A E36B
	06	G12A G16A G38A G38B
	10	K09A K09B
	12	M03A M03B
	19	U01A U01B
64.92.00‡↔	01	B60A
	12	M05Z
64.92.10‡↔	01	B60A
	12	M05Z
64.92.20‡↔	01	B60A
	12	M05Z
64.92.99‡↔	01	B60A
	12	M05Z
64.93.00‡↔	01	B60A
	12	M05Z
64.93.10‡↔	01	B60A
	12	M05Z
64.93.99‡↔	01	B60A
	12	M05Z
64.95↔		BORP MBOR VAC VAC I VAC II VBOR
	04	E36A E36B
	06	G12A G16A G38A G38B
	11	L09A L09B
	12	M03A M03B
	19	U01A U01B
64.96↔	11	L09A L09B
	12	M03A M03B
	19	U01A U01B
64.97↔		BORP MBOR VAC VAC I VAC II VBOR
	04	E36A E36B
	06	G12A G16A G38A G38B
	11	L09A
	12	M03A M03B M09A M37Z
	19	U01A
64.98.00‡↔	01	B60A
	12	M05Z
64.98.10‡↔	01	B60A
	12	M05Z
64.98.20↔		BORP MBOR VAC VAC I VAC II VBOR
	04	E36A E36B
	06	G12A G16A G38A G38B
	12	M03A M03B
	19	U01A U01B
64.98.30↔		BORP MBOR VAC VAC I VAC II VBOR
	04	E36A E36B
	06	G12A G16A G38A G38B
	12	M03A M03B
	19	U01A U01B
64.98.40↔		BORP MBOR VAC VAC I VAC II VBOR
	04	E36A E36B
	06	G12A G16A G38A G38B
	11	L09A L09B
	12	M03A M03B
	19	U01A U01B
65.01↔		BORP MBOR VAC VAC I VAC II VBOR
	04	E36A E36B
	06	G12A G16A G38A

CHOP	MDC	DRG
		G38B
	13	N02A N02B N02C
		N04C N07A N07B
		N25A N25B N33Z
65.09↔		BORP MBOR VAC
		VAC I VAC II VBOR
	04	E36A E36B
	06	G12A G16A G38A
		G38B
	13	N02A N02B N02C
		N04C N07A N07B
		N25A N25B N33Z
65.11↔	10	K09A K09B
	13	N02A N02B N02C
		N04C N07A N07B
		N25A N25B N33Z
65.12↔	10	K09A K09B
	13	N02A N02B N02C
		N04C N07A N07B
		N25A N25B N33Z
65.13↔	10	K09A K09B
	13	N02A N02B N02C
		N04C N07A N07B
		N25A N25B N33Z
65.14↔	10	K09A K09B
	13	N02A N02B N02C
		N04C N07A N07B
		N25A N25B N33Z
65.15‡↔		AKBB
	01	B60A
	16	Q86A
65.21↔		BORP MBOR VAC
		VAC I VAC II VBOR
	04	E36A E36B
	06	G12A G16A G38A
		G38B
	13	N02A N02B N02C
		N04C N07A N07B
		N25A N25B N33Z
65.22↔		BORP MBOR VAC
		VAC I VAC II VBOR
	04	E36A E36B
	06	G12A G16A G38A
		G38B
	10	K09A K09B
	13	N02A N02B N02C
		N04C N07A N07B
		N25A N25B N33Z
65.23↔		BORP MBOR VAC
		VAC I VAC II VBOR
	04	E36A E36B
	06	G12A G16A G38A
		G38B
	13	N02A N02B N02C
		N04C N07A N07B
		N25A N25B N33Z
65.24↔		BORP MBOR VAC
		VAC I VAC II VBOR
	04	E36A E36B
	06	G12A G16A G38A
		G38B
	10	K09A K09B
	13	N02A N02B N02C
		N04C N07A N07B
		N25A N25B N33Z
65.25↔		BORP MBOR VAC
		VBOR
	04	E36A E36B
	06	G12A G16A G38A
		G38B
	13	N02A N02B N02C
		N04C N07A N07B
		N25A N25B N33Z
65.29↔		BORP MBOR VAC
		VBOR
	04	E36A E36B
	06	G12A G16A G38A
		G38B
	13	N02A N02B N02C
		N04C N07A N07B
		N25A N25B N33Z
65.30↔		BORP MBOR VAC
		VAC I VAC II VBOR
	04	E36A E36B
	06	G12A G16A G38A
		G38B
	09	J02A J02B J03A
		J03B J04Z J11A
		J11B
	10	K09A K09B
	13	N02A N02B N02C
		N04A N04B N04C
		N04D N33Z
	19	U01A U01B
65.31↔		BORP MBOR VAC
		VAC I VAC II VBOR
	04	E36A E36B
	06	G12A G16A G38A
		G38B
	09	J02A J02B J03A
		J03B J04Z J11A
		J11B
	10	K09A K09B
	13	N02A N02B N02C
		N04A N04B N04C
		N04D N33Z
	19	U01A U01B
65.32↔		BORP MBOR VAC
		VAC I VAC II VBOR
	04	E36A E36B
	06	G12A G16A G38A
		G38B
	09	J02A J02B J03A
		J03B J04Z J11A
		J11B
	10	K09A K09B
	13	N02A N02B N02C
		N04A N04B N04C
		N04D N07A N07B
		N25A N25B N33Z
	19	U01A U01B
65.33↔		BORP MBOR VAC
		VAC I VAC II VBOR
	04	E36A E36B
	06	G12A G16A G38A
		G38B
	09	J02A J02B J03A
		J03B J04Z J11A
		J11B
	10	K09A K09B
	13	N02A N02B N02C
		N04A N04B N04C
		N04D N07A N07B
		N25A N25B N33Z
	19	U01A U01B
65.34↔		BORP MBOR VAC
		VAC I VAC II VBOR
	04	E36A E36B
	06	G12A G16A G38A
		G38B
	09	J02A J02B J03A
		J03B J04Z J11A
		J11B
	10	K09A K09B
	13	N02A N02B N02C
		N04A N04B N04C
		N04D N33Z
	19	U01A U01B
65.39↔		BORP MBOR VAC
		VAC I VAC II VBOR
	04	E36A E36B
	06	G12A G16A G38A
		G38B
	09	J02A J02B J03A
		J03B J04Z J11A
		J11B
	10	K09A K09B
	13	N02A N02B N02C
		N04A N04B N04C
		N04D N33Z
	19	U01A U01B
65.40↔		BORP MBOR VAC
		VAC I VAC II VBOR
	04	E36A E36B
	06	G12A G16A G38A
		G38B
	09	J02A J02B J03A
		J03B J04Z J11A
		J11B
	10	K09A K09B
	13	N02A N02B N02C
		N04A N04B N04C
		N04D N33Z
	14	O03Z
	19	U01A U01B
65.41↔		BORP MBOR VAC
		VAC I VAC II VBOR
	04	E36A E36B
	06	G12A G16A G38A
		G38B
	09	J02A J02B J03A
		J03B J04Z J11A
		J11B
	10	K09A K09B
	13	N02A N02B N02C
		N04A N04B N04C
		N04D N33Z
	14	O03Z
	19	U01A U01B
65.42↔		BORP MBOR VAC
		VAC I VAC II VBOR
	04	E36A E36B
	06	G12A G16A G38A
		G38B
	09	J02A J02B J03A
		J03B J04Z J11A
		J11B
	10	K09A K09B
	13	N02A N02B N02C
		N04A N04B N04C
		N04D N33Z
	14	O03Z
	19	U01A U01B
65.43↔		BORP MBOR VAC
		VAC I VAC II VBOR
	04	E36A E36B
	06	G12A G16A G38A
		G38B
	09	J02A J02B J03A
		J03B J04Z J11A

PROC

CHOP	MDC	DRG
		J11B
	10	K09A K09B
	13	N02A N02B N02C N04A N04B N04C N04D N33Z
	14	O03Z
	19	U01A U01B
65.44↔		BORP MBOR VAC VAC I VAC II VBOR
	04	E36A E36B
	06	G12A G16A G38A G38B
	09	J02A J02B J03A J03B J04Z J11A J11B
	10	K09A K09B
	13	N02A N02B N02C N04A N04B N04C N04D N33Z
	14	O03Z
	19	U01A U01B
65.49↔		BORP MBOR VAC VAC I VAC II VBOR
	04	E36A E36B
	06	G12A G16A G38A G38B
	09	J02A J02B J03A J03B J04Z J11A J11B
	10	K09A K09B
	13	N02A N02B N02C N04A N04B N04C N04D N33Z
	14	O03Z
	19	U01A U01B
65.71↔		BORP MBOR VAC VBOR
	04	E36A E36B
	06	G12A G16A G38A G38B
	13	N02A N02B N02C N04C N07A N07B N25A N25B N33Z
	21B	X06A X06B X06C
65.72↔		BORP MBOR VAC VAC I VAC II VBOR
	04	E36A E36B
	06	G12A G16A G38A G38B
	13	N02A N02B N02C N04C N07A N07B N25A N25B N33Z
	21B	X06A X06B X06C
65.73↔		BORP MBOR VAC VAC I VAC II VBOR
	04	E36A E36B
	06	G12A G16A G38A G38B
	13	N02A N02B N02C N04A N04B N04C N04D N07A N07B N25A N25B N33Z
	21B	X06A X06B X06C
65.74↔		BORP MBOR VAC VAC I VAC II VBOR
	04	E36A E36B
	06	G12A G16A G38A G38B
	13	N02A N02B N02C N04C N07A N07B N25A N25B N33Z
	21B	X06A X06B X06C
65.75↔		BORP MBOR VAC VAC I VAC II VBOR
	04	E36A E36B
	06	G12A G16A G38A G38B
	13	N02A N02B N02C N04C N07A N07B N25A N25B N33Z
	21B	X06A X06B X06C
65.76↔		BORP MBOR VAC VAC I VAC II VBOR
	04	E36A E36B
	06	G12A G16A G38A G38B
	13	N02A N02B N02C N04C N07A N07B N25A N25B N33Z
	21B	X06A X06B X06C
65.79↔		BORP MBOR VAC VBOR
	04	E36A E36B
	06	G12A G16A G38A G38B
	13	N02A N02B N02C N04C N07A N07B N25A N25B N33Z
	21B	X06A X06B X06C
65.81.00↔		BORP MBOR VAC VAC I VAC II VBOR
	04	E36A E36B
	06	G12A G16A G21A G21B G21C G38A G38B
	07	H06Z H07C
	11	L03Z L04A L04B L06A L06B L09A L09B L10A L10B L13A L13B L13C L20A L20B L20C L20D L20E L38Z
	13	N02A N02B N02C N04A N04B N04C N06B N33Z
	21B	X06A X06B X06C
65.81.10↔		BORP MBOR VAC VAC I VAC II VBOR
	04	E36A E36B
	06	G12A G16A G21A G21B G21C G38A G38B
	07	H06Z H07C
	11	L03Z L04A L04B L06A L06B L09A L09B L10A L10B L13A L13B L13C L20A L20B L20C L20D L20E L38Z
	13	N02A N02B N02C N04A N04B N04C N06B N33Z
	21B	X06A X06B X06C
65.81.99↔		BORP MBOR VAC VAC I VAC II VBOR
	04	E36A E36B
	06	G12A G16A G21A G21B G21C G38A G38B
	07	H06Z H07C
	11	L03Z L04A L04B L06A L06B L09A L09B L10A L10B L13A L13B L13C L20A L20B L20C L20D L20E L38Z
	13	N02A N02B N02C N04A N04B N04C N06B N33Z
	21B	X06A X06B X06C
65.89.00↔		BORP MBOR VAC VAC I VAC II VBOR
	04	E36A E36B
	06	G12A G16A G21A G21B G21C G38A G38B
	07	H06Z H07C
	11	L03Z L04A L04B L06A L06B L09A L09B L10A L10B L13A L13B L13C L20A L20B L20C L20D L20E L38Z
	13	N02A N02B N02C N04A N04B N04C N06B N33Z
	21B	X06A X06B X06C
65.89.10↔		BORP MBOR VAC VAC I VAC II VBOR
	04	E36A E36B
	06	G12A G16A G21A G21B G21C G38A G38B
	07	H06Z H07C
	11	L03Z L04A L04B L06A L06B L09A L09B L10A L10B L13A L13B L13C L20A L20B L20C L20D L20E L38Z
	13	N02A N02B N02C N04A N04B N04C N06B N33Z
	21B	X06A X06B X06C
65.89.11↔		BORP MBOR VAC VAC I VAC II VBOR
	04	E36A E36B
	06	G12A G16A G21A G21B G21C G38A G38B
	07	H06Z H07C
	11	L03Z L04A L04B L06A L06B L09A L09B L10A L10B L13A L13B L13C L20A L20B L20C L20D L20E L38Z
	13	N02A N02B N02C N04A N04B N04C N06B N33Z
	21B	X06A X06B X06C
65.89.12↔		BORP MBOR VAC VAC I VAC II VBOR
	04	E36A E36B
	06	G12A G16A G21A G21B G21C G38A G38B
	07	H06Z H07C
	11	L03Z L04A L04B L06A L06B L09A

CHOP	MDC	DRG
		L09B L10A L10B
		L13A L13B L13C
		L20A L20B L20C
		L20D L20E L38Z
	13	N02A N02B N02C
		N04A N04B N04C
		N06B N33Z
	21B	X06A X06B X06C
65.89.13↔		BORP MBOR VAC
		VAC I VAC II VBOR
	04	E36A E36B
	06	G12A G16A G21A
		G21B G21C G38A
		G38B
	07	H06Z H07C
	11	L03Z L04A L04B
		L06A L06B L09A
		L09B L10A L10B
		L13A L13B L13C
		L20A L20B L20C
		L20D L20E L38Z
	13	N02A N02B N02C
		N04A N04B N04C
		N06B N33Z
	21B	X06A X06B X06C
65.89.99↔		BORP MBOR VAC
		VAC I VAC II VBOR
	04	E36A E36B
	06	G12A G16A G21A
		G21B G21C G38A
		G38B
	07	H06Z H07C
	11	L03Z L04A L04B
		L06A L06B L09A
		L09B L10A L10B
		L13A L13B L13C
		L20A L20B L20C
		L20D L20E L38Z
	13	N02A N02B N02C
		N04A N04B N04C
		N06B N33Z
	21B	X06A X06B X06C
65.91↔	13	N25A N25B
65.92↔		BORP KORP MBOR
		MKOR VAC VAC I
		VAC II VBOR VKOR
	04	E36A E36B
	06	G12A G16A G38A
		G38B
	13	N02A N02B N02C
		N04C N07A N07B
		N25A N25B N33Z
65.93↔		BORP MBOR VAC
		VAC I VAC II VBOR
	04	E36A E36B
	06	G12A G16A G38A
		G38B
	13	N02A N02B N02C
		N04C N07A N07B
		N25A N25B N33Z
65.94↔		BORP MBOR VAC
		VAC I VAC II VBOR
	04	E36A E36B
	06	G12A G16A G38A
		G38B
	13	N02A N02B N02C
		N04C N07A N07B
		N25A N25B N33Z
65.95↔		BORP MBOR VAC
		VAC I VAC II VBOR

CHOP	MDC	DRG
	04	E36A E36B
	06	G12A G16A G38A
		G38B
	13	N02A N02B N02C
		N04C N07A N07B
		N25A N25B N33Z
	21B	X06A X06B X06C
65.99↔		BORP MBOR VAC
		VAC I VAC II VBOR
	04	E36A E36B
	06	G12A G16A G38A
		G38B
	13	N02A N02B N02C
		N04C N07A N07B
		N25A N25B N33Z
66.00↔	13	N02A N02B N02C
		N04C N07A N07B
		N25A N25B N33Z
	14	O03Z
66.03↔		BORP MBOR VAC
		VAC I VAC II VBOR
	04	E36A E36B
	06	G12A G16A G38A
		G38B
	13	N02A N02B N02C
		N04C N07A N07B
		N25A N25B N33Z
	14	O03Z
66.04↔		BORP MBOR VAC
		VAC I VAC II VBOR
	04	E36A E36B
	06	G12A G16A G38A
		G38B
	13	N02A N02B N02C
		N04C N07A N07B
		N25A N25B N33Z
	14	O03Z
66.05↔		BORP MBOR VAC
		VAC I VAC II VBOR
	04	E36A E36B
	06	G12A G16A G38A
		G38B
	13	N02A N02B N02C
		N04C N07A N07B
		N25A N25B N33Z
	14	O03Z
66.06↔		BORP MBOR VAC
		VAC I VAC II VBOR
	04	E36A E36B
	06	G12A G16A G38A
		G38B
	13	N02A N02B N02C
		N04C N07A N07B
		N25A N25B N33Z
	14	O03Z
66.09↔		BORP MBOR VAC
		VAC I VAC II VBOR
	04	E36A E36B
	06	G12A G16A G38A
		G38B
	13	N02A N02B N02C
		N04C N07A N07B
		N25A N25B N33Z
	14	O03Z
66.11.11‡↔		AKBB
	01	B60A
	16	Q86A
66.11.21↔	13	N02A N02B N02C
		N04C N07A N07B
		N25A N25B N33Z

CHOP	MDC	DRG
66.11.31↔	13	N02A N02B N02C
		N04C N07A N07B
		N25A N25B N33Z
66.11.41‡↔		AKBB
	01	B60A
	16	Q86A
66.40↔	13	N02A N02B N02C
		N04C N07A N07B
		N25A N25B N33Z
	14	O03Z
66.41.11↔		BORP MBOR VAC
		VAC I VAC II VBOR
	04	E36A E36B
	06	G12A G16A G38A
		G38B
	13	N02A N02B N02C
		N04A N04B N04C
		N04D N33Z
	14	O02A O02B O03Z
66.41.21↔		BORP MBOR VAC
		VAC I VAC II VBOR
	04	E36A E36B
	06	G12A G16A G38A
		G38B
	13	N02A N02B N02C
		N04A N04B N04C
		N04D N33Z
	14	O02A O02B O03Z
66.41.31↔		BORP MBOR VAC
		VAC I VAC II VBOR
	04	E36A E36B
	06	G12A G16A G38A
		G38B
	13	N02A N02B N02C
		N04A N04B N04C
		N04D N33Z
	14	O02A O02B O03Z
66.41.41↔		BORP MBOR VAC
		VAC I VAC II VBOR
	04	E36A E36B
	06	G12A G16A G38A
		G38B
	13	N02A N02B N02C
		N04A N04B N04C
		N04D N33Z
	14	O02A O02B O03Z
66.42.11↔		BORP MBOR VAC
		VAC I VAC II VBOR
	04	E36A E36B
	06	G12A G16A G38A
		G38B
	13	N02A N02B N02C
		N04C N07A N07B
		N25A N25B N33Z
	14	O02A O02B O03Z
66.42.21↔		BORP MBOR VAC
		VAC I VAC II VBOR
	04	E36A E36B
	06	G12A G16A G38A
		G38B
	13	N02A N02B N02C
		N04C N07A N07B
		N25A N25B N33Z
	14	O02A O02B O03Z
66.42.31↔		BORP MBOR VAC
		VAC I VAC II VBOR
	04	E36A E36B
	06	G12A G16A G38A
		G38B
	13	N02A N02B N02C

PROC

PROC

CHOP	MDC	DRG
		N04C N07A N07B N25A N25B N33Z
	14	O02A O02B O03Z
66.42.41↔		BORP MBOR VAC VAC I VAC II VBOR
	04	E36A E36B
	06	G12A G16A G38A G38B
	13	N02A N02B N02C N04C N07A N07B N25A N25B N33Z
	14	O02A O02B O03Z
66.49↔		BORP MBOR VAC VAC I VAC II VBOR
	04	E36A E36B
	06	G12A G16A G38A G38B
	13	N02A N02B N02C N04C N07A N07B N25A N25B N33Z
	14	O02A O02B O03Z
66.71↔		BORP MBOR VAC VAC I VAC II VBOR
	04	E36A E36B
	06	G12A G16A G38A G38B
	13	N02A N02B N02C N04C N07A N07B N25A N25B N33Z
	21B	X06A X06B X06C
66.72↔		BORP MBOR VAC VAC I VAC II VBOR
	04	E36A E36B
	06	G12A G16A G38A G38B
	13	N02A N02B N02C N04C N07A N07B N25A N25B N33Z
	14	O03Z
66.73↔		BORP MBOR VAC VAC I VAC II VBOR
	04	E36A E36B
	06	G12A G16A G38A G38B
	13	N02A N02B N02C N04A N04B N04C N04D N33Z
66.74↔		BORP MBOR VAC VAC I VAC II VBOR
	04	E36A E36B
	06	G12A G16A G38A G38B
	13	N02A N02B N02C N04A N04B N04C N04D N33Z
66.79.00↔	13	N02A N02B N02C N04A N04B N04C N04D N07A N07B N25A N25B N33Z
	21B	X06A X06B X06C
66.79.10↔		BORP MBOR VAC VAC I VAC II VBOR
	04	E36A E36B
	06	G12A G16A G38A G38B
	13	N02A N02B N02C N04A N04B N04C N04D N07A N07B N25A N25B N33Z
	21B	X06A X06B X06C
66.79.20↔		BORP MBOR VAC VAC I VAC II VBOR
	04	E36A E36B
	06	G12A G16A G38A G38B
	13	N02A N02B N02C N04A N04B N04C N04D N07A N07B N25A N25B N33Z
	21B	X06A X06B X06C
66.79.21↔		BORP MBOR VAC VAC I VAC II VBOR
	04	E36A E36B
	06	G12A G16A G38A G38B
	13	N02A N02B N02C N04A N04B N04C N04D N07A N07B N25A N25B N33Z
	21B	X06A X06B X06C
66.79.30↔		BORP MBOR VAC VAC I VAC II VBOR
	04	E36A E36B
	06	G12A G16A G38A G38B
	13	N02A N02B N02C N04A N04B N04C N04D N07A N07B N25A N25B N33Z
	21B	X06A X06B X06C
66.79.99↔		BORP MBOR VAC VAC I VAC II VBOR
	04	E36A E36B
	06	G12A G16A G38A G38B
	13	N02A N02B N02C N04A N04B N04C N04D N07A N07B N25A N25B N33Z
	21B	X06A X06B X06C
66.8↔	13	N09Z
66.93↔		BORP MBOR VAC VAC I VAC II VBOR
	04	E36A E36B
	06	G12A G16A G38A G38B
	13	N02A N02B N02C N04C N07A N07B N25A N25B N33Z
66.94↔		BORP MBOR VAC VAC I VAC II VBOR
	04	E36A E36B
	06	G12A G16A G38A G38B
	13	N02A N02B N02C N04C N07A N07B N25A N25B N33Z
66.95↔	13	N02A N02B N02C N04C N07A N07B N25A N25B N33Z
66.96↔		BORP MBOR VAC VBOR
	04	E36A E36B
	06	G12A G16A G38A G38B
	13	N02A N02B N02C N04C N07A N07B N25A N25B N33Z
66.97↔		BORP MBOR VAC VAC I VAC II VBOR
	04	E36A E36B
	06	G12A G16A G38A G38B
	13	N02A N02B N02C N04C N07A N07B N25A N25B N33Z
66.A0↔	13	N02A N02B N02C N04C N07A N07B N09Z N25A N25B N33Z
	14	O04Z
66.A1↔		BORP MBOR VAC VAC I VAC II VBOR
	04	E36A E36B
	06	G12A G16A G38A G38B
	13	N02A N02B N02C N04C N07A N07B N09Z N25A N25B N33Z
	14	O02A O02B O04Z
66.A2↔		BORP MBOR VAC VAC I VAC II VBOR
	04	E36A E36B
	06	G12A G16A G38A G38B
	13	N02A N02B N02C N04C N07A N07B N09Z N25A N25B N33Z
	14	O02A O02B O04Z
66.A3↔		BORP MBOR VAC VAC I VAC II VBOR
	04	E36A E36B
	06	G12A G16A G38A G38B
	13	N02A N02B N02C N04C N07A N07B N09Z N25A N25B N33Z
	14	O02A O02B O04Z
66.A4↔		BORP MBOR VAC VAC I VAC II VBOR
	04	E36A E36B
	06	G12A G16A G38A G38B
	13	N02A N02B N02C N04C N07A N07B N09Z N25A N25B N33Z
	14	O02A O02B O04Z
66.A9↔		BORP MBOR VAC VAC I VAC II VBOR
	04	E36A E36B
	06	G12A G16A G38A G38B
	13	N02A N02B N02C N04C N07A N07B N09Z N25A N25B N33Z
	14	O02A O02B O04Z
66.B0↔	13	N02A N02B N02C N04C N07A N07B N09Z N25A N25B N33Z
	14	O02A O02B
66.B1↔		BORP MBOR VAC VAC I VAC II VBOR
	04	E36A E36B
	06	G12A G16A G38A

CHOP	MDC	DRG
		G38B
	13	N02A N02B N02C
		N04C N07A N07B
		N09Z N25A N25B
		N33Z
	14	O02A O02B
66.B2↔		BORP MBOR VAC
		VAC I VAC II VBOR
	04	E36A E36B
	06	G12A G16A G38A
		G38B
	13	N02A N02B N02C
		N04C N07A N07B
		N09Z N25A N25B
		N33Z
	14	O02A O02B
66.B3↔		BORP MBOR VAC
		VAC I VAC II VBOR
	04	E36A E36B
	06	G12A G16A G38A
		G38B
	13	N02A N02B N02C
		N04C N07A N07B
		N09Z N25A N25B
		N33Z
	14	O02A O02B
66.B4↔		BORP MBOR VAC
		VAC I VAC II VBOR
	04	E36A E36B
	06	G12A G16A G38A
		G38B
	13	N02A N02B N02C
		N04C N07A N07B
		N09Z N25A N25B
		N33Z
	14	O02A O02B
66.B9↔		BORP MBOR VAC
		VAC I VAC II VBOR
	04	E36A E36B
	06	G12A G16A G38A
		G38B
	13	N02A N02B N02C
		N04C N07A N07B
		N09Z N25A N25B
		N33Z
	14	O02A O02B
67.2‡↔	01	B60A
	13	N23A N23B
	14	O65A O65B
67.31‡↔	01	B60A
	13	N23A N23B
	14	O65A O65B
67.32‡↔	01	B60A
	13	N23A N23B
	14	O65A O65B
67.33‡↔	01	B60A
	13	N23A N23B
	14	O65A O65B
67.34‡↔	01	B60A
	13	N23A N23B
	14	O65A O65B
67.35‡↔	01	B60A
	13	N23A N23B
	14	O65A O65B
67.39‡↔	01	B60A
	13	N23A N23B
	14	O65A O65B
67.4X.00↔		BORP MBOR VAC
		VBOR
	04	E36A E36B

CHOP	MDC	DRG
	06	G12A G16A G38A
		G38B
	13	N13Z
67.4X.10↔		BORP MBOR VAC
		VAC I VAC II VBOR
	04	E36A E36B
	06	G12A G16A G38A
		G38B
	13	N13Z
67.4X.11↔		BORP MBOR VAC
		VAC I VAC II VBOR
	04	E36A E36B
	06	G12A G16A G38A
		G38B
	13	N13Z
67.4X.12↔		BORP MBOR VAC
		VAC I VAC II VBOR
	04	E36A E36B
	06	G12A G16A G38A
		G38B
	13	N13Z
67.4X.13↔		BORP MBOR VAC
		VAC I VAC II VBOR
	04	E36A E36B
	06	G12A G16A G38A
		G38B
	13	N13Z
67.4X.14↔		BORP MBOR VAC
		VAC I VAC II VBOR
	04	E36A E36B
	06	G12A G16A G38A
		G38B
	13	N13Z
67.4X.20↔		BORP MBOR VAC
		VAC I VAC II VBOR
	04	E36A E36B
	06	G12A G16A G38A
		G38B
	13	N13Z
67.4X.21↔		BORP MBOR VAC
		VAC I VAC II VBOR
	04	E36A E36B
	06	G12A G16A G38A
		G38B
	13	N13Z
67.4X.22↔		BORP MBOR VAC
		VAC I VAC II VBOR
	04	E36A E36B
	06	G12A G16A G38A
		G38B
	13	N13Z
67.4X.23↔		BORP MBOR VAC
		VAC I VAC II VBOR
	04	E36A E36B
	06	G12A G16A G38A
		G38B
	13	N13Z
67.4X.24↔		BORP MBOR VAC
		VAC I VAC II VBOR
	04	E36A E36B
	06	G12A G16A G38A
		G38B
	13	N13Z
67.4X.29↔		BORP MBOR VAC
		VAC I VAC II VBOR
	04	E36A E36B
	06	G12A G16A G38A
		G38B
	13	N13Z
67.4X.30↔		BORP MBOR VAC

CHOP	MDC	DRG
		VAC I VAC II VBOR
	04	E36A E36B
	06	G12A G16A G38A
		G38B
	13	N13Z
67.4X.99↔		BORP MBOR VAC
		VAC I VAC II VBOR
	04	E36A E36B
	06	G12A G16A G38A
		G38B
	13	N13Z
67.51↔		BORP MBOR VAC
		VAC I VAC II VBOR
	04	E36A E36B
	06	G12A G16A G38A
		G38B
	13	N13Z
	14	O02A O02B
	21B	X06A X06B X06C
67.59‡↔	01	B60A
	13	N23A N23B
	14	O65A O65B
67.61↔		BORP MBOR VAC
		VAC I VAC II VBOR
	04	E36A E36B
	06	G12A G16A G38A
		G38B
	13	N13Z
	14	O02A O02B
	21B	X06A X06B X06C
67.62↔		BORP MBOR VAC
		VAC I VAC II VBOR
	04	E36A E36B
	06	G12A G16A G38A
		G38B
	13	N13Z
	14	O02A O02B
	21B	X06A X06B X06C
67.69‡↔	01	B60A
	13	N23A N23B
	14	O65A O65B
68.0↔		BORP MBOR VAC
		VAC I VAC II VBOR
	04	E36A E36B
	06	G12A G16A G38A
		G38B
	13	N02A N02B N02C
		N04C N07A N07B
		N25A N25B N33Z
	14	O02A O02B O04Z
	21B	X06A X06B X06C
68.12.00‡↔	01	B60A
	13	N23A N23B
	14	O65A O65B
68.12.10‡↔	01	B60A
	13	N23A N23B
	14	O65A O65B
68.12.11‡↔	01	B60A
	13	N23A N23B
	14	O65A O65B
68.12.12‡↔	01	B60A
	13	N23A N23B
	14	O65A O65B
68.12.19‡↔	01	B60A
	13	N23A N23B
	14	O65A O65B
68.12.99‡↔	01	B60A
	13	N23A N23B
	14	O65A O65B
68.13↔	13	N02A N02B N02C

PROC

PROC

CHOP	MDC	DRG
		N04C N07A N07B
		N25A N25B N33Z
68.14↔	13	N02A N02B N02C
		N04C N07A N07B
		N25A N25B N33Z
68.15↔	13	N02A N02B N02C
		N04C N07A N07B
		N25A N25B N33Z
68.16‡↔		AKBB
	01	B60A
	16	Q86A
68.21.10↔		BORP MBOR VAC
		VAC I VAC II VBOR
	04	E36A E36B
	06	G12A G16A G38A
		G38B
	13	N09Z
68.21.11↔		BORP MBOR VAC
		VAC I VAC II VBOR
	04	E36A E36B
	06	G12A G16A G38A
		G38B
	13	N09Z
68.21.99↔		BORP MBOR VAC
		VAC I VAC II VBOR
	04	E36A E36B
	06	G12A G16A G38A
		G38B
	13	N09Z
68.22.00↔		BORP MBOR VAC
		VAC I VAC II VBOR
	04	E36A E36B
	06	G12A G16A G38A
		G38B
	13	N09Z N13Z
68.22.10↔		BORP MBOR VAC
		VAC I VAC II VBOR
	04	E36A E36B
	06	G12A G16A G38A
		G38B
	13	N09Z N13Z
68.22.11↔		BORP MBOR VAC
		VAC I VAC II VBOR
	04	E36A E36B
	06	G12A G16A G38A
		G38B
	13	N09Z N13Z
68.22.12↔		BORP MBOR VAC
		VAC I VAC II VBOR
	04	E36A E36B
	06	G12A G16A G38A
		G38B
	13	N09Z N13Z
68.22.13↔		BORP MBOR VAC
		VAC I VAC II VBOR
	04	E36A E36B
	06	G12A G16A G38A
		G38B
	13	N09Z N13Z
68.22.99↔		BORP MBOR VAC
		VAC I VAC II VBOR
	04	E36A E36B
	06	G12A G16A G38A
		G38B
	13	N09Z N13Z
68.23↔	11	L09A L09B
	13	N09Z
	14	O02A O02B O04Z
68.29.1G↔		BORP MBOR VAC
		VAC I VAC II VBOR
	04	E36A E36B
	06	G12A G16A G38A
		G38B
	13	N23A N23B
	14	O02A O02B
68.29.1H↔		BORP MBOR VAC
		VAC I VAC II VBOR
	04	E36A E36B
	06	G12A G16A G38A
		G38B
	13	N23A N23B
	14	O02A O02B
68.29.1I↔		BORP MBOR VAC
		VAC I VAC II VBOR
	04	E36A E36B
	06	G12A G16A G38A
		G38B
	13	N23A N23B
	14	O02A O02B
68.29.1J‡↔	01	B60A
	13	N23A N23B
	14	O65A O65B
68.29.46↔		BORP MBOR VAC
		VAC I VAC II VBOR
	04	E36A E36B
	06	G12A G16A G38A
		G38B
	13	N23A N23B
	14	O02A O02B
68.29.47↔		BORP MBOR VAC
		VAC I VAC II VBOR
	04	E36A E36B
	06	G12A G16A G38A
		G38B
	13	N23A N23B
	14	O02A O02B
68.29.48↔		BORP MBOR VAC
		VAC I VAC II VBOR
	04	E36A E36B
	06	G12A G16A G38A
		G38B
	13	N23A N23B
	14	O02A O02B
68.29.4A↔		BORP MBOR VAC
		VAC I VAC II VBOR
	04	E36A E36B
	06	G12A G16A G38A
		G38B
	13	N23A N23B
	14	O02A O02B
68.29.4B↔		BORP MBOR VAC
		VAC I VAC II VBOR
	04	E36A E36B
	06	G12A G16A G38A
		G38B
	13	N23A N23B
	14	O02A O02B
68.30↔		BORP MBOR VAC
		VAC I VAC II VBOR
	04	E36A E36B
	06	G12A G12B G16A
		G38A G38B
	13	N01A N01B N01C
		N01D N01E N04A
		N04B N04C N04D
		N33Z
	14	O01B O02A O02B
	19	U01A
68.31↔		BORP MBOR VAC
		VAC I VAC II VBOR
	04	E36A E36B
	06	G12A G12B G16A
		G38A G38B
	13	N01A N01B N01C
		N01D N01E N04A
		N04B N04C N04D
		N33Z
	14	O01B O02A O02B
	19	U01A
68.32↔		BORP MBOR VAC
		VAC I VAC II VBOR
	04	E36A E36B
	06	G12A G12B G16A
		G38A G38B
	13	N01A N01B N01C
		N01D N01E N04A
		N04B N04C N04D
		N33Z
	14	O01B O02A O02B
	19	U01A
68.39↔		BORP MBOR VAC
		VAC I VAC II VBOR
	04	E36A E36B
	06	G12A G12B G16A
		G38A G38B
	13	N01A N01B N01C
		N01D N01E N04A
		N04B N04C N04D
		N33Z
	14	O01B O02A O02B
	19	U01A
68.40↔		BORP MBOR VAC
		VAC I VAC II VBOR
	04	E36A E36B
	06	G12A G12B G16A
		G38A G38B
	14	O01B O02A O02B
	19	U01A U01B
68.41↔		BORP MBOR VAC
		VAC I VAC II VBOR
	04	E36A E36B
	06	G12A G12B G16A
		G38A G38B
	13	N01A N01B N01C
		N01D N01E N04A
		N04B N04C N04D
		N33Z
	14	O01B O02A O02B
	19	U01A U01B
68.42↔		BORP MBOR VAC
		VAC I VAC II VBOR
	04	E36A E36B
	06	G12A G12B G16A
		G38A G38B
	13	N01A N01B N01C
		N01D N01E N04A
		N04B N04C N04D
		N33Z
	14	O01B O02A O02B
	19	U01A U01B
68.43↔		BORP MBOR VAC
		VAC I VAC II VBOR
	04	E36A E36B
	06	G12A G12B G16A
		G38A G38B
	13	N01A N01B N01C
		N01D N01E N04A
		N04B N04C N04D
		N33Z
	14	O01B O02A O02B

CHOP	MDC	DRG
	19	U01A U01B
68.44↔		BORP MBOR VAC VAC I VAC II VBOR
	04	E36A E36B
	06	G12A G12B G16A G38A G38B
	13	N01A N01B N01C N01D N01E N04A N04B N04C N04D N33Z
	14	O01B O02A O02B
	19	U01A U01B
68.49↔		BORP MBOR VAC VAC I VAC II VBOR
	04	E36A E36B
	06	G12A G12B G16A G38A G38B
	14	O01B O02A O02B
	19	U01A U01B
68.60↔		BORP KORP MBOR MKOR MVE VAC VAC I VAC II VBOR VKOR
	04	E36A E36B
	06	G12A G16A G16B G38A G38B
	13	N01A N01B N01C N01D N04A N04B N04C N04D N33Z
	14	O01B O02A O02B
68.61↔		BORP MBOR MVE VAC VAC I VAC II VBOR
	04	E36A E36B
	06	G12A G16A G16B G38A G38B
	13	N01A N01B N01C N01D N04A N04B N04C N04D N33Z
	14	O01B O02A O02B
68.62↔		BORP KORP MBOR MKOR MVE VAC VAC I VAC II VBOR VKOR
	04	E36A E36B
	06	G12A G16A G16B G38A G38B
	13	N01A N01B N01C N01D N04A N04B N04C N04D N33Z
	14	O01B O02A O02B
68.63↔		BORP KORP MBOR MKOR MVE VAC VAC I VAC II VBOR VKOR
	04	E36A E36B
	06	G12A G16A G16B G38A G38B
	13	N01A N01B N01C N01D N04A N04B N04C N04D N33Z
	14	O01B O02A O02B
68.64↔		BORP KORP MBOR MKOR MVE VAC VAC I VAC II VBOR VKOR
	04	E36A E36B
	06	G12A G16A G16B G38A G38B
	13	N01A N01B N01C N01D N04A N04B N04C N04D N33Z
	14	O01B O02A O02B
68.6A↔		BORP KORP MBOR MKOR MVE VAC VAC I VAC II VBOR VKOR
	04	E36A E36B
	06	G12A G16A G16B G38A G38B
	13	N01A N01B N01C N01D N04A N04B N04C N04D N33Z
	14	O01B O02A O02B
68.8↔		BORP KORP MBOR MKOR MVE VAC VAC I VAC II VBOR VKOR
	04	E36A E36B
	06	G12A G16A G16B G33Z G38A G38B G38C
	07	H33Z
	11	L33Z
	13	N01A N01B N01C N01D N33Z
	21B Prä	X07A X07B A06A A06B A06C A07A
69.01↔		BORP MBOR VAC VBOR
	04	E36A E36B
	06	G12A G16A G38A G38B
	14	O04Z
69.02↔		BORP MBOR VAC VBOR
	04	E36A E36B
	06	G12A G16A G38A G38B
	14	O02A O02B O04Z
69.09↔	11	L09A L09B
	13	N09Z
	14	O02A O02B O04Z
69.19↔		BORP MBOR VAC VBOR
	04	E36A E36B
	06	G12A G12B G16A G38A G38B
	10	K09A K09B
	13	N11A N11B
69.21↔		BORP MBOR VAC VAC I VAC II VBOR
	04	E36A E36B
	06	G12A G16A G38A G38B
	11	L06A L06B
	13	N04C N06A N06B N06C
69.22↔		BORP MBOR VAC VAC I VAC II VBOR
	04	E36A E36B
	06	G12A G16A G38A G38B
	11	L06A L06B
	13	N04A N04B N06A N06B N06C N33Z
69.23↔		BORP MBOR VAC VAC I VAC II VBOR
	04	E36A E36B
	06	G12A G16A G38A G38B
	13	N02A N02B N02C N04C N07A N07B N25A N25B N33Z
	14	O02A O02B
	21B	X06A X06B X06C
69.29↔		BORP MBOR VAC VBOR
	04	E36A E36B
	06	G12A G16A G38A G38B
	13	N02A N02B N02C N04C N07A N07B N25A N25B N33Z
	14	O02A O02B
	21B	X06A X06B X06C
69.3↔		BORP MBOR VAC VAC I VAC II VBOR
	04	E36A E36B
	06	G12A G16A G38A G38B
	13	N02A N02B N02C N04C N07A N07B N25A N25B N33Z
	14	O02A O02B
69.41↔		BORP MBOR VAC VAC I VAC II VBOR
	04	E36A E36B
	06	G12A G16A G38A G38B
	13	N02A N02B N02C N04C N07A N07B N25A N25B N33Z
	14	O02A O02B
	21B	X06A X06B X06C
69.42↔		BORP MBOR VAC VAC I VAC II VBOR
	04	E36A E36B
	06	G12A G16A G38A G38B
	13	N02A N02B N02C N04C N07A N07B N25A N25B N33Z
	14	O02A O02B
	21B	X06A X06B X06C
69.49.00↔		BORP MBOR VAC VAC I VAC II VBOR
	04	E36A E36B
	06	G12A G16A G38A G38B
	13	N02A N02B N02C N04C N07A N07B N25A N25B N33Z
	14	O02A O02B
	21B	X06A X06B X06C
69.49.10↔		BORP MBOR VAC VAC I VAC II VBOR
	04	E36A E36B
	06	G12A G16A G38A G38B
	13	N02A N02B N02C N04C N07A N07B N25A N25B N33Z
	14	O02A O02B
	21B	X06A X06B X06C
69.49.20↔		BORP MBOR VAC VAC I VAC II VBOR
	04	E36A E36B
	06	G12A G16A G38A

PROC

PROC

CHOP	MDC	DRG
		G38B
	13	N02A N02B N02C
		N04C N07A N07B
		N25A N25B N33Z
	14	O02A O02B
	21B	X06A X06B X06C
69.49.21↔		BORP MBOR VAC
		VAC I VAC II VBOR
	04	E36A E36B
	06	G12A G16A G38A
		G38B
	13	N02A N02B N02C
		N04C N07A N07B
		N25A N25B N33Z
	14	O02A O02B
	21B	X06A X06B X06C
69.49.30↔		BORP MBOR VAC
		VAC I VAC II VBOR
	04	E36A E36B
	06	G12A G16A G38A
		G38B
	13	N02A N02B N02C
		N04C N07A N07B
		N25A N25B N33Z
	14	O02A O02B
	21B	X06A X06B X06C
69.49.99↔		BORP MBOR VAC
		VAC I VAC II VBOR
	04	E36A E36B
	06	G12A G16A G38A
		G38B
	13	N02A N02B N02C
		N04C N07A N07B
		N25A N25B N33Z
	14	O02A O02B
	21B	X06A X06B X06C
69.51↔		BORP MBOR VAC
		VBOR
	04	E36A E36B
	06	G12A G16A G38A
		G38B
	14	O04Z
69.52↔		BORP MBOR VAC
		VBOR
	04	E36A E36B
	06	G12A G16A G38A
		G38B
	14	O02A O02B O04Z
69.59↔	13	N09Z
	14	O02A O02B O04Z
69.6↔		BORP MBOR VAC
		VBOR
	04	E36A E36B
	06	G12A G16A G38A
		G38B
	13	N09Z N11A N11B
	14	O02A O02B
69.92.01↔	13	N11A N11B
69.92.10↔	13	N11A N11B
69.92.11↔	13	N11A N11B
69.92.12↔	13	N11A N11B
69.92.19↔	13	N11A N11B
69.92.20↔	13	N11A N11B
69.92.21↔	13	N11A N11B
69.92.22↔	13	N11A N11B
69.92.23↔	13	N11A N11B
69.92.24↔	13	N11A N11B
69.92.29↔	13	N11A N11B
69.92.30↔	13	N11A N11B
69.92.31↔	13	N11A N11B

CHOP	MDC	DRG
69.92.32↔	13	N11A N11B
69.92.39↔	13	N11A N11B
69.92.99↔	13	N11A N11B
69.95.10‡↔		AKBB
	01	B60A
	16	Q86A
70.11↔	13	N09Z
	14	O02A O02B
	19	U01A U01B
70.12↔		BORP MBOR VAC
		VAC I VAC II VBOR
	04	E36A E36B
	06	G12A G12B G16A
		G38A G38B
	11	L09A L09B
	13	N11A N11B
	14	O02A O02B
	21B	X06A X06B X06C
70.13↔		BORP MBOR VAC
		VAC I VAC II VBOR
	04	E36A E36B
	06	G12A G16A G21A
		G21B G21C G38A
		G38B
	07	H06Z H07C
	09	J02A J02B J03A
		J03B J04Z J11A
		J11B
	11	L03Z L04A L04B
		L06A L06B L09A
		L09B L10A L10B
		L13A L13B L13C
		L20A L20B L20C
		L20D L20E L38Z
	13	N02A N02B N02C
		N04A N04B N04C
		N06B N33Z
	14	O02A O02B
	19	U01A U01B
	21B	X06A X06B X06C
70.22↔	13	N11A N11B
	14	O02A O02B
	21B	X06A X06B X06C
70.23↔	06	G12A G12B
	13	N02A N02B N02C
		N04C N07A N07B
		N25A N25B N33Z
70.24.10‡↔		AKBB
	01	B60A
	16	Q86A
70.24.11‡↔		AKBB
	01	B60A
	16	Q86A
70.24.20‡↔		AKBB
	01	B60A
	16	Q86A
70.24.99‡↔		AKBB
	01	B60A
	16	Q86A
70.31↔	13	N13Z
	14	O02A O02B
70.32.00↔	06	G12A G12B
	10	K09A K09B
	13	N08Z
70.32.10↔	06	G12A G12B
	09	J02A J02B J03A
		J03B J04Z J11A
		J11B
	10	K09A K09B
	13	N04A N04B N07A

CHOP	MDC	DRG
		N08Z N33Z
70.32.11↔	06	G12A G12B
	09	J02A J02B J03A
		J03B J04Z J11A
		J11B
	10	K09A K09B
	13	N08Z
70.32.99↔	06	G12A G12B
	09	J02A J02B J03A
		J03B J04Z J11A
		J11B
	10	K09A K09B
	13	N08Z
70.33.00↔	09	J02A J02B J03A
		J03B J04Z J11A
		J11B
	11	L09A L09B
	13	N13Z
	14	O02A O02B
	21B	X06A X06B X06C
70.33.10↔	09	J02A J02B J03A
		J03B J04Z J11A
		J11B
	11	L09A L09B
	13	N13Z
	14	O02A O02B
	21B	X06A X06B X06C
70.33.11↔	09	J02A J02B J03A
		J03B J04Z J11A
		J11B
	11	L09A L09B
	13	N13Z
	14	O02A O02B
	21B	X06A X06B X06C
70.33.12↔	09	J02A J02B J03A
		J03B J04Z J11A
		J11B
	11	L09A L09B
	13	N13Z
	14	O02A O02B
	21B	X06A X06B X06C
70.33.13↔	09	J02A J02B J03A
		J03B J04Z J11A
		J11B
	11	L09A L09B
	13	N13Z
	14	O02A O02B
	21B	X06A X06B X06C
70.33.14↔	09	J02A J02B J03A
		J03B J04Z J11A
		J11B
	11	L09A L09B
	13	N13Z
	14	O02A O02B
	21B	X06A X06B X06C
70.33.99↔	09	J02A J02B J03A
		J03B J04Z J11A
		J11B
	11	L09A L09B
	13	N13Z
	14	O02A O02B
	21B	X06A X06B X06C
70.41↔		BORP MBOR VAC
		VBOR
	04	E36A E36B
	06	G12A G16A G38A
		G38B
	13	N04C N06A N06B
		N06C
	19	U01A U01B

CHOP	MDC	DRG
70.42↔		BORP MBOR VAC VBOR
	04	E36A E36B
	06	G12A G16A G38A G38B
	13	N04C N06A N06B
	19	U01A U01B
70.43↔		BORP MBOR VAC VBOR
	04	E36A E36B
	06	G12A G16A G38A G38B
	13	N04C N06A N06B
	19	U01A U01B
70.49↔		BORP MBOR VAC VAC I VAC II VBOR
	04	E36A E36B
	06	G12A G16A G38A G38B
	13	N04C N06A N06B N06C
	19	U01A U01B
70.50↔		BORP MBOR VAC VAC I VAC II VBOR
	04	E36A E36B
	06	G12A G16A G38A G38B
	11	L06A L06B
	13	N23A N23B
70.51↔		BORP MBOR VAC VAC I VAC II VBOR
	04	E36A E36B
	06	G12A G16A G38A G38B
	11	L06A L06B
	13	N23A N23B
70.52.00↔		BORP MBOR VAC VAC I VAC II VBOR
	04	E36A E36B
	06	G12A G16A G38A G38B
	11	L06A L06B
	13	N23A N23B
70.52.10↔		BORP MBOR VAC VAC I VAC II VBOR
	04	E36A E36B
	06	G12A G16A G38A G38B
	11	L06A L06B
	13	N23A N23B
70.52.99↔		BORP MBOR VAC VAC I VAC II VBOR
	04	E36A E36B
	06	G12A G16A G38A G38B
	11	L06A L06B
	13	N23A N23B
70.53↔		BORP MBOR VAC VAC I VAC II VBOR
	04	E36A E36B
	06	G12A G16A G38A G38B
	11	L06A L06B
	13	N04A N04B N06A N06B N06C N33Z
70.54↔		BORP MBOR VAC VAC I VAC II VBOR
	04	E36A E36B
	06	G12A G16A G38A G38B
	11	L06A L06B
	13	N04A N04B N06A N06B N06C N33Z
70.55↔		BORP MBOR VAC VAC I VAC II VBOR
	04	E36A E36B
	06	G12A G16A G38A G38B
	11	L06A L06B
	13	N04A N04B N06A N06B N06C N33Z
70.61.11↔		BORP MBOR VAC VAC I VAC II VBOR
	04	E36A E36B
	06	G12A G16A G38A G38B
	10	K09A K09B
	13	N04C N06A N06B N06C
	19	U01A
	21B	X06A X06B X06C
70.61.99↔		BORP MBOR VAC VAC I VAC II VBOR
	04	E36A E36B
	06	G12A G16A G38A G38B
	10	K09A K09B
	13	N04C N06A N06B N06C
	19	U01A U01B
	21B	X06A X06B X06C
70.62↔		BORP MBOR VAC VAC I VAC II VBOR
	04	E36A E36B
	06	G12A G16A G38A G38B
	10	K09A K09B
	13	N04C N06A N06B N06C
	19	U01A U01B
	21B	X06A X06B X06C
70.63↔		BORP MBOR VAC VAC I VAC II VBOR
	04	E36A E36B
	06	G12A G16A G38A G38B
	10	K09A K09B
	13	N04A N04B N06A N06B N06C N33Z
	19	U01A
	21B	X06A X06B X06C
70.64↔		BORP MBOR VAC VAC I VAC II VBOR
	04	E36A E36B
	06	G12A G16A G38A G38B
	10	K09A K09B
	13	N04A N04B N06A N06B N06C N33Z
	19	U01A
	21B	X06A X06B X06C
70.71↔	09	J02A J02B J03A J03B J04Z J11A J11B
	10	K09A K09B
	13	N13Z
	14	O02A O02B
	21B	X06A X06B X06C
70.72.10↔		BORP MBOR VAC VAC I VAC II VBOR
	04	E36A E36B
	06	G12A G16A G16B G18A G18B G38A G38B G38C
	13	N04C N06A N06B N06C N13Z
	14	O02A O02B
	21B	X06A X06B X06C
70.72.20↔		BORP MBOR VAC VAC I VAC II VBOR
	04	E36A E36B
	06	G12A G16A G16B G18A G18B G38A G38B G38C
	13	N04C N06A N06B N06C N13Z
	14	O02A O02B
	21B	X06A X06B X06C
70.72.30↔		BORP MBOR VAC VAC I VAC II VBOR
	04	E36A E36B
	06	G12A G16A G16B G18A G18B G38A G38B G38C
	13	N04C N06A N06B N06C N13Z
	14	O02A O02B
	21B	X06A X06B X06C
70.72.99↔		BORP MBOR VAC VAC I VAC II VBOR
	04	E36A E36B
	06	G12A G16A G16B G18A G18B G38A G38B G38C
	13	N04C N06A N06B N06C N13Z
	14	O02A O02B
	21B	X06A X06B X06C
70.73.10↔		BORP MBOR VAC VAC I VAC II VBOR
	04	E36A E36B
	06	G12A G16A G16B G18A G18B G38A G38B G38C
	13	N04C N06A N06B N06C N13Z
	14	O02A O02B
	21B	X06A X06B X06C
70.73.20↔		BORP MBOR VAC VAC I VAC II VBOR
	04	E36A E36B
	06	G12A G16A G16B G18A G18B G38A G38B G38C
	13	N04C N06A N06B N06C N13Z
	14	O02A O02B
	21B	X06A X06B X06C
70.73.30↔		BORP MBOR VAC VAC I VAC II VBOR
	04	E36A E36B
	06	G12A G16A G16B G18A G18B G38A G38B G38C
	13	N04C N06A N06B N06C N13Z
	14	O02A O02B
	21B	X06A X06B X06C
70.73.99↔		BORP MBOR VAC VAC I VAC II VBOR

PROC

CHOP	MDC	DRG
	04	E36A E36B
	06	G12A G12B G16A G38A G38B
	13	N04C N06A N06B N06C N13Z
	14	O02A O02B
	21B	X06A X06B X06C
70.74↔		BORP MBOR VAC VAC I VAC II VBOR
	04	E36A E36B
	06	G04A G04B G12A G16A G38A G38B G38C
	13	N13Z
	14	O02A O02B
	21B	X06A X06B X06C
70.75↔		BORP MBOR VAC VAC I VAC II VBOR
	04	E36A E36B
	06	G04A G04B G12A G16A G38A G38B G38C
	13	N13Z
	14	O02A O02B
	21B	X06A X06B X06C
70.76↔	13	N13Z
	14	O02A O02B
70.77↔		BORP MBOR VAC VAC I VAC II VBOR
	04	E36A E36B
	06	G12A G16A G38A G38B
	11	L06A L06B
	13	N04A N04B N06A N06B N06C N33Z
	14	O02A O02B
70.78↔		BORP MBOR VAC VAC I VAC II VBOR
	04	E36A E36B
	06	G12A G16A G38A G38B
	11	L06A L06B
	13	N04A N04B N06A N06B N06C N33Z
	14	O02A O02B
70.79.10↔		BORP MBOR VAC VAC I VAC II VBOR
	04	E36A E36B
	06	G12A G16A G38A G38B
	09	J02A J02B J03A J03B J04Z J11A J11B
	10	K09A K09B
	11	L06A L06B
	13	N04C N06A N06B N06C N13Z
	14	O02A O02B
	21B	X06A X06B X06C
70.8↔		BORP MBOR VAC VAC I VAC II VBOR
	04	E36A E36B
	06	G12A G16A G38A G38B
	13	N13Z
	14	O02A O02B
70.91↔	13	N11A N11B N13Z
	14	O02A O02B
70.92.00↔	06	G12A G12B
	13	N04C N06A N06B

CHOP	MDC	DRG
		N06C N13Z
	14	O02A O02B
70.92.10↔	06	G12A G12B
	13	N04C N06A N06B N06C N13Z
	14	O02A O02B
70.92.99↔	06	G12A G12B
	13	N04C N06A N06B N06C N13Z
	14	O02A O02B
70.93↔		BORP MBOR VAC VAC I VAC II VBOR
	04	E36A E36B
	06	G12A G12B G16A G38A G38B
	13	N04C N06A N06B N06C
	14	O02A O02B
71.01↔		BORP VAC I VAC II
	04	E36A E36B
	06	G16A G21A G21B G21C G38A G38B
	07	H06Z H07C
	09	J02A J02B J03A J03B J04Z J11A J11B
	10	K09A K09B
	11	L03Z L04A L04B L06A L06B L09A L09B L10A L10B L13A L13B L13C L20A L20B L20C L20D L20E L38Z
	13	N02A N02B N02C N04A N04B N04C N06B N33Z
	21B	X06A X06B X06C
71.11.10‡↔		AKBB
	01	B60A
	16	Q86A
71.11.11‡↔		AKBB
	01	B60A
	16	Q86A
71.11.20‡↔		AKBB
	01	B60A
	16	Q86A
71.11.99‡↔		AKBB
	01	B60A
	16	Q86A
71.4X.10↔	10	K09A K09B
	13	N13Z
	19	U01A
71.4X.99↔	10	K09A K09B
	13	N13Z
	19	U01A U01B
71.5↔		BORP MBOR VAC VAC I VAC II VBOR
	04	E36A E36B
	06	G12A G16A G33Z G38A G38B G38C
	07	H33Z
	11	L33Z
	13	N01A N01B N01C N01D N33Z
	19	U01A
	21B	X07A X07B
71.61↔		BORP MBOR VAC VAC I VAC II VBOR
	04	E36A E36B
	06	G12A G16A G38A

CHOP	MDC	DRG
		G38B
	13	N04C N06A N06B N06C
	19	U01A U01B
71.62↔		BORP MBOR VAC VAC I VAC II VBOR
	04	E36A E36B
	06	G12A G16A G38A G38B
	09	J02A J02B J03A J03B J04Z J11A J11B
	13	N04C N06A N06B N06C
	19	U01A
71.71↔	13	N09Z
	14	O02A O02B
	19	U01A U01B
	21B	X06A X06B X06C
71.72↔		BORP MBOR VAC VAC I VAC II VBOR
	04	E36A E36B
	06	G04A G04B G12A G16A G38A G38B G38C
	13	N09Z
	14	O02A O02B
	19	U01A U01B
	21B	X06A X06B X06C
71.73↔		BORP MBOR VAC VAC I VAC II VBOR
	04	E36A E36B
	06	G12A G16A G38A G38B
	09	J02A J02B J03A J03B J04Z J11A J11B
	13	N04C N06A N06B N06C N09Z
	19	U01A U01B
	21B	X06A X06B X06C
71.79‡↔	01	B60A
	13	N23A N23B
	14	O02A O02B
	19	U01A U01B
71.8‡↔	01	B60A
	13	N23A N23B
	14	O02A O02B
	19	U01A U01B
71.9‡↔	01	B60A
	13	N23A N23B
	14	O02A O02B
	19	U01A U01B
73.7X.12‡↔	01	B60A
	14	O50A O50B O50C O50D
73.7X.13‡↔	01	B60A
	14	O50A O50B O50C
73.7X.14‡↔	01	B60A
	14	O50A O50B O50C
73.7X.15‡↔	01	B60A
	14	O50A O50B O50C
73.94↔		BORP MBOR VAC VAC I VAC II VBOR
	04	E36A E36B
	06	G12A G16A G38A G38B
	14	O02A O02B
74.0X.00↔		BORP MBOR VAC VAC I VAC II VBOR

CHOP	MDC	DRG
	04	E36A E36B
	06	G12A G16A G38A G38B
	14	O01A O01B O01C O01D O01E O01F O01G
74.0X.10↔		BORP MBOR VAC VAC I VAC II VBOR
	04	E36A E36B
	06	G12A G16A G38A G38B
	14	O01A O01B O01C O01D O01E O01F O01G
74.0X.20↔		BORP MBOR VAC VAC I VAC II VBOR
	04	E36A E36B
	06	G12A G16A G38A G38B
	14	O01A O01B O01C O01D O01E
74.0X.99↔		BORP MBOR VAC VAC I VAC II VBOR
	04	E36A E36B
	06	G12A G16A G38A G38B
	14	O01A O01B O01C O01D O01E O01F O01G
74.1X.00↔		BORP MBOR VAC VAC I VAC II VBOR
	04	E36A E36B
	06	G12A G16A G38A G38B
	14	O01A O01B O01C O01D O01E O01F O01G
74.1X.10↔		BORP MBOR VAC VAC I VAC II VBOR
	04	E36A E36B
	06	G12A G16A G38A G38B
	14	O01A O01B O01C O01D O01E O01F O01G
74.1X.20↔		BORP MBOR VAC VAC I VAC II VBOR
	04	E36A E36B
	06	G12A G16A G38A G38B
	14	O01A O01B O01C O01D O01E
74.1X.99↔		BORP MBOR VAC VAC I VAC II VBOR
	04	E36A E36B
	06	G12A G16A G38A G38B
	14	O01A O01B O01C O01D O01E O01F O01G
74.2X.00↔		BORP MBOR VAC VAC I VAC II VBOR
	04	E36A E36B
	06	G12A G16A G38A G38B
	14	O01A O01B O01C O01D O01E O01F O01G
74.2X.10↔		BORP MBOR VAC VAC I VAC II VBOR
	04	E36A E36B
	06	G12A G16A G38A G38B
	14	O01A O01B O01C O01D O01E O01F O01G
74.2X.20↔		BORP MBOR VAC VAC I VAC II VBOR
	04	E36A E36B
	06	G12A G16A G38A G38B
	14	O01A O01B O01C O01D O01E
74.2X.99↔		BORP MBOR VAC VAC I VAC II VBOR
	04	E36A E36B
	06	G12A G16A G38A G38B
	14	O01A O01B O01C O01D O01E O01F O01G
74.3↔		BORP MBOR VAC VAC I VAC II VBOR
	04	E36A E36B
	06	G12A G16A G38A G38B
	14	O03Z
74.4X.00↔		BORP MBOR VAC VAC I VAC II VBOR
	04	E36A E36B
	06	G12A G16A G38A G38B
	14	O01A O01B O01C O01D O01E O01F O01G
74.4X.10↔		BORP MBOR VAC VAC I VAC II VBOR
	04	E36A E36B
	06	G12A G16A G38A G38B
	14	O01A O01B O01C O01D O01E O01F O01G
74.4X.20↔		BORP MBOR VAC VAC I VAC II VBOR
	04	E36A E36B
	06	G12A G16A G38A G38B
	14	O01A O01B O01C O01D O01E
74.4X.99↔		BORP MBOR VAC VAC I VAC II VBOR
	04	E36A E36B
	06	G12A G16A G38A G38B
	14	O01A O01B O01C O01D O01E O01F O01G
74.99.00↔		BORP MBOR VAC VAC I VAC II VBOR
	04	E36A E36B
	06	G12A G16A G38A G38B
	14	O01A O01B O01C O01D O01E O01F O01G
74.99.10↔		BORP MBOR VAC VAC I VAC II VBOR
	04	E36A E36B
	06	G12A G16A G38A G38B
	14	O01A O01B O01C O01D O01E O01F O01G
74.99.20↔		BORP MBOR VAC VAC I VAC II VBOR
	04	E36A E36B
	06	G12A G16A G38A G38B
	14	O01A O01B O01C O01D O01E O01F O01G
74.99.99↔		BORP MBOR VAC VAC I VAC II VBOR
	04	E36A E36B
	06	G12A G16A G38A G38B
	14	O01A O01B O01C O01D O01E O01F O01G
75.4‡↔	01	B60A
	14	O50A O50B O60A O60C
75.50↔		BORP MBOR VAC VAC I VAC II VBOR
	04	E36A E36B
	06	G12A G16A G38A G38B
	13	N02A N02B N02C N04C N07A N07B N25A N25B N33Z
	14	O02A O02B
	21B	X06A X06B X06C
75.51↔		BORP MBOR VAC VAC I VAC II VBOR
	04	E36A E36B
	06	G12A G16A G38A G38B
	14	O02A O02B
75.52↔		BORP MBOR VAC VAC I VAC II VBOR
	04	E36A E36B
	06	G12A G16A G38A G38B
	13	N02A N02B N02C N04C N07A N07B N25A N25B N33Z
	14	O02A O02B
	21B	X06A X06B X06C
75.61↔	14	O02A O02B
75.62↔	14	O02A O02B
75.7‡↔	01	B60A
	14	O50A O50B O60A O60C
75.93↔		BORP MBOR VAC VAC I VAC II VBOR
	04	E36A E36B
	06	G12A G16A G38A G38B
	14	O02A O02B
75.B1.12‡↔		AKBB
	01	B60A
	14	O01B O02A
	16	Q86A
75.B1.13↔	14	O01A O01B O01C O01D O01E O01F O01G
75.B1.14‡↔		AKBB
	01	B60A
	14	O01B O02A

PROC

PROC

CHOP	MDC	DRG
	16	Q86A
75.B1.15↔	14	O01A O01B O01C O01D O01E O01F O01G
75.B1.99‡↔		AKBB
	01	B60A
	14	O01B O02A
	16	Q86A
75.B2.11↔	14	O01A O01B O01C O01D O01E O01F O01G
75.B2.12↔	14	O01A O01B O01C O01D O01E O01F O01G
75.B2.21↔	14	O01A O01B O01C O01D O01E O01F O01G
75.B2.99↔	14	O01A O01B O01C O01D O01E O01F O01G
75.C1.11‡↔	01	B60A
	14	O01B O02A
75.C1.12‡↔	01	B60A
	14	O01B O02A
75.C1.99‡↔	01	B60A
	14	O01B O02A
75.C2↔		BORP MBOR VAC VAC I VAC II VBOR
	04	E36A E36B
	06	G12A G16A G38A G38B
	14	O01A O01B O01C O01D O01E O01F O01G
75.C3↔		BORP MBOR VAC VAC I VAC II VBOR
	04	E36A E36B
	06	G12A G16A G38A G38B
	14	O01A O01B O01C O01D O01E O01F O01G
75.C4↔		BORP MBOR VAC VAC I VAC II VBOR
	04	E36A E36B
	06	G12A G16A G38A G38B
	14	O01A O01B O01C O01D O01E O01F O01G
75.C5↔	14	O01A O01B O01C O01D O01E O01F O01G
75.C7‡↔	01	B60A
	14	O01B O02A
75.C8.11↔		BORP MBOR VAC VAC I VAC II VBOR
	04	E36A E36B
	06	G12A G16A G38A G38B
	14	O01A O01B O01C O01D O01E O01F O01G
75.C8.99↔		BORP MBOR VAC VAC I VAC II VBOR
	04	E36A E36B
	06	G12A G16A G38A G38B
	14	O01A O01B O01C O01D O01E O01F

CHOP	MDC	DRG
		O01G
75.C9↔		BORP MBOR VAC VAC I VAC II VBOR
	04	E36A E36B
	06	G12A G16A G38A G38B
	14	O01A O01B O01C O01D O01E O01F O01G
75.D1↔		BORP MBOR VAC VAC I VAC II VBOR
	04	E36A E36B
	06	G12A G16A G38A G38B
	14	O01A O01B O01C O01D O01E O01F O01G
75.D2↔		BORP MBOR VAC VAC I VAC II VBOR
	04	E36A E36B
	06	G12A G16A G38A G38B
	14	O01A O01B O01C O01D O01E O01F O01G
75.D3‡↔	01	B60A
	14	O01B O02A
75.D9↔		BORP MBOR VAC VAC I VAC II VBOR
	04	E36A E36B
	06	G12A G16A G38A G38B
	14	O01A O01B O01C O01D O01E O01F O01G
75.E1↔		BORP MBOR VAC VAC I VAC II VBOR
	04	E36A E36B
	06	G12A G16A G38A G38B
	14	O01A O01B O01C O01D O01E
75.E2↔		BORP MBOR VAC VAC I VAC II VBOR
	04	E36A E36B
	06	G12A G16A G38A G38B
	14	O01A O01B O01C O01D O01E
75.E9↔		BORP MBOR VAC VAC I VAC II VBOR
	04	E36A E36B
	06	G12A G16A G38A G38B
	14	O01A O01B O01C O01D O01E
75.F1‡↔	01	B60A
	14	O01B O02A
75.F2‡↔	01	B60A
	14	O01B O02A
75.F9‡↔	01	B60A
	14	O01B O02A
76.01↔		BORP MBOR VAC VAC I VAC II VBOR
	03	D25A D25B
	04	E36A E36B
	06	G12A G16A G38A G38B
	08	I23A I23B
	09	J02A J02B J08Z

CHOP	MDC	DRG
76.09.10↔		BORP MBOR VAC VAC I VAC II VBOR
	03	D25A D25B D28Z D29Z
	04	E36A E36B
	06	G12A G16A G38A G38B
	08	I17Z I23A I23B I23C
	09	J02A J02B J08Z
	21B	X06A X06B X06C
76.11.10‡↔		AKBB
	01	B60A
	16	Q86A
76.11.11↔	03	D12A D12B
	04	E02A E02B E02C
	08	I18A I18B I18C
	21B	X06A X06B X06C
76.11.99↔	03	D12A D12B
	04	E02A E02B E02C
	08	I18A I18B I18C
	21B	X06A X06B X06C
76.19.10‡↔		AKBB
	01	B60A
	16	Q86A
76.19.11↔	03	D12A D12B
	04	E02A E02B E02C
	08	I18A I18B I18C
	21B	X06A X06B X06C
76.19.12↔	03	D12A D12B
	04	E02A E02B E02C
	08	I18A I18B I18C
	21B	X06A X06B X06C
76.2X.00↔		BORP MBOR VAC VBOR
	03	D25A D25B D28Z D29Z
	04	E36A E36B
	06	G12A G16A G38A G38B
	08	I17Z
	09	J02A J02B J08Z
	21B	X06A X06B X06C
76.2X.10↔		BORP MBOR VAC VAC I VAC II VBOR
	03	D25A D25B D28Z D29Z
	04	E36A E36B
	06	G12A G16A G38A G38B
	08	I17Z
	09	J02A J02B J08Z
	21B	X06A X06B X06C
76.2X.11↔		BORP MBOR VAC VAC I VAC II VBOR
	03	D25A D25B D28Z D29Z
	04	E36A E36B
	06	G12A G16A G38A G38B
	08	I17Z
	09	J02A J02B J08Z
	21B	X06A X06B X06C
76.2X.12↔	03	D25A D25B D28Z D29Z
	08	I17Z
	09	J02A J02B J08Z
	19	U01A
	21B	X06A X06B X06C
76.2X.20↔		BORP MBOR VAC

CHOP	MDC	DRG
		VBOR
	03	D25A D25B D28Z D29Z
	04	E36A E36B
	06	G12A G16A G38A G38B
	08	I17Z
	09	J02A J02B J08Z
	21B	X06A X06B X06C
76.2X.31↔		BORP MBOR VAC VAC I VAC II VBOR
	03	D25A D25B D28Z D29Z
	04	E36A E36B
	06	G12A G16A G38A G38B
	08	I17Z
	09	J02A J02B J08Z
	21B	X06A X06B X06C
76.2X.99↔		BORP MBOR VAC VBOR
	03	D25A D25B D28Z D29Z
	04	E36A E36B
	06	G12A G16A G38A G38B
	08	I17Z
	09	J02A J02B J08Z
	21B	X06A X06B X06C
76.31.00↔		BORP MBOR VAC VAC I VAC II VBOR
	03	D25A D25B
	04	E36A E36B
	06	G12A G16A G38A G38B
	08	I17Z
	09	J02A J02B J08Z
	21B	X06A X06B X06C
76.31.10↔		BORP MBOR VAC VAC I VAC II VBOR
	03	D25A D25B
	04	E36A E36B
	06	G12A G16A G38A G38B
	08	I17Z
	09	J02A J02B J08Z
	21B	X06A X06B X06C
76.31.20↔		BORP KORP MBOR MKOR VAC VAC I VAC II VB VBOR VKOR
	03	D02A D02B D24A D24B
	04	E36A E36B
	05	F04Z
	06	G12A G16A G38A G38B
	08	I02A I02B I02C
	09	J01A J01B J02A J02B J08Z
	12	M37Z
	21A	W01A W01B
	21B	X01A X06A X06B X06C X07A X07B
	22	Y02A Y02B
76.31.21↔		BORP MBOR VAC VAC I VAC II VBOR
	03	D25A D25B
	04	E36A E36B
	06	G12A G16A G38A

CHOP	MDC	DRG
		G38B
	08	I17Z
	09	J02A J02B J08Z
	21B	X06A X06B X06C
76.31.29↔		BORP MBOR VAC VAC I VAC II VBOR
	03	D25A D25B
	04	E36A E36B
	06	G12A G16A G38A G38B
	08	I17Z
	09	J02A J02B J08Z
	21B	X06A X06B X06C
76.31.99↔		BORP MBOR VAC VAC I VAC II VBOR
	03	D25A D25B
	04	E36A E36B
	06	G12A G16A G38A G38B
	08	I17Z
	09	J02A J02B J08Z
	21B	X06A X06B X06C
76.39.00↔		BORP MBOR VAC VAC I VAC II VBOR
	03	D25A D25B
	04	E36A E36B
	06	G12A G16A G38A G38B
	08	I17Z
	09	J02A J02B J08Z
	21B	X06A X06B X06C
76.39.10↔		BORP KORP MBOR MKOR VAC VAC I VAC II VB VBOR VKOR
	03	D02A D02B D24A D24B D25A D25B
	04	E36A E36B
	05	F04Z
	06	G12A G16A G38A G38B
	08	I02A I02B I02C
	09	J01A J01B J02A J02B J08Z
	12	M37Z
	21A	W01A W01B
	21B	X01A X06A X06B X06C X07A X07B
	22	Y02A Y02B
76.39.11↔		BORP MBOR VAC VAC I VAC II VBOR
	03	D25A D25B
	04	E36A E36B
	06	G12A G16A G38A G38B
	08	I17Z
	09	J02A J02B J08Z
	21B	X06A X06B X06C
76.39.19↔		BORP MBOR VAC VAC I VAC II VBOR
	03	D25A D25B
	04	E36A E36B
	06	G12A G16A G38A G38B
	08	I17Z
	09	J02A J02B J08Z
	21B	X06A X06B X06C
76.39.99↔		BORP MBOR VAC VAC I VAC II VBOR
	03	D25A D25B

CHOP	MDC	DRG
	04	E36A E36B
	06	G12A G16A G38A G38B
	08	I17Z
	09	J02A J02B J08Z
	21B	X06A X06B X06C
76.41.00↔		BORP MBOR VAC VAC I VAC II VBOR
	03	D02A D02B D24A D24B D24C D25A D25B
	04	E36A E36B
	06	G12A G16A G38A G38B
	08	I17Z
	09	J02A J02B J08Z
	21B	X06A X06B X06C
76.41.10↔		BORP KORP MBOR MKOR VAC VAC I VAC II VB VBOR VKOR
	03	D02A D02B D24A D24B D25A D25B
	04	E36A E36B
	05	F04Z
	06	G12A G16A G38A G38B
	08	I02A I02B I02C
	09	J01A J01B J02A J02B J08Z
	12	M37Z
	21A	W01A W01B
	21B	X01A X06A X06B X06C X07A X07B
	22	Y02A Y02B
76.41.99↔		BORP MBOR VAC VAC I VAC II VBOR
	03	D02A D02B D24A D24B D24C D25A D25B
	04	E36A E36B
	06	G12A G16A G38A G38B
	08	I17Z
	09	J02A J02B J08Z
	21B	X06A X06B X06C
76.42↔		BORP MBOR VAC VAC I VAC II VBOR
	03	D25A D25B
	04	E36A E36B
	06	G12A G16A G38A G38B
	08	I17Z
	09	J02A J02B J08Z
	21B	X06A X06B X06C
76.43.00↔		BORP MBOR VAC VAC I VAC II VBOR
	03	D25A D25B
	04	E36A E36B
	06	G12A G16A G38A G38B
	08	I17Z
	09	J02A J02B J08Z
	21B	X06A X06B X06C
76.43.10↔		BORP KORP MBOR MKOR VAC VAC I VAC II VB VBOR VKOR
	03	D02A D02B D24A D24B D25A D25B

PROC

PROC

CHOP	MDC	DRG
	04	E36A E36B
	05	F04Z
	06	G12A G16A G38A G38B
	08	I02A I02B I02C
	09	J01A J01B J02A J02B J08Z
	12	M37Z
	21A	W01A W01B
	21B	X01A X06A X06B X06C X07A X07B
	22	Y02A Y02B
76.43.11↔		BORP KORP MBOR MKOR VAC VAC I VAC II VBOR VKOR
	03	D02A D02B D24A D24B D24C D25A D25B
	04	E36A E36B
	06	G12A G16A G38A G38B
	08	I17Z
	09	J02A J02B J08Z
	21B	X06A X06B X06C
76.43.12↔		BORP KORP MBOR MKOR VAC VAC I VAC II VBOR VKOR
	01	B09B B20A B20B
	03	D02A D24A D24B D24C D25A
	04	E36A E36B
	06	G12A G16A G38A G38B
	08	I17Z
	09	J02A J02B J08Z
	21B	X06A X06B X06C
76.43.99↔		BORP MBOR VAC VAC I VAC II VBOR
	03	D25A D25B
	04	E36A E36B
	06	G12A G16A G38A G38B
	08	I17Z
	09	J02A J02B J08Z
	21B	X06A X06B X06C
76.44.00↔		BORP MBOR VAC VAC I VAC II VBOR
	03	D25A D25B
	04	E36A E36B
	06	G12A G16A G33Z G38A G38B G38C
	07	H33Z
	08	I17Z
	09	J02A J02B J08Z
	11	L33Z
	21B	X06A X06B X06C X07A X07B
76.44.10↔		BORP KORP MBOR MKOR VAC VAC I VAC II VB VBOR VKOR
	03	D02A D02B D24A D24B D25A D25B
	04	E36A E36B
	05	F04Z
	06	G12A G16A G33Z G38A G38B G38C
	07	H33Z
	08	I02A I02B I02C
	09	J01A J01B J02A J02B J08Z
	11	L33Z
	12	M37Z
	21A	W01A W01B
	21B	X01A X06A X06B X06C X07A X07B
	22	Y02A Y02B
76.44.11↔		BORP MBOR VAC VAC I VAC II VBOR
	03	D02A D02B D24A D24B D24C D25A D25B
	04	E36A E36B
	06	G12A G16A G33Z G38A G38B G38C
	07	H33Z
	08	I17Z
	09	J02A J02B J08Z
	11	L33Z
	21B	X06A X06B X06C X07A X07B
76.44.19↔		BORP MBOR VAC VAC I VAC II VBOR
	03	D02A D02B D24A D24B D24C D25A D25B
	04	E36A E36B
	06	G12A G16A G33Z G38A G38B G38C
	07	H33Z
	08	I17Z
	09	J02A J02B J08Z
	11	L33Z
	21B	X06A X06B X06C X07A X07B
76.44.99↔		BORP MBOR VAC VAC I VAC II VBOR
	03	D02A D02B D24A D24B D24C D25A D25B
	04	E36A E36B
	06	G12A G16A G33Z G38A G38B G38C
	07	H33Z
	08	I17Z
	09	J02A J02B J08Z
	11	L33Z
	21B	X06A X06B X06C X07A X07B
76.45↔		BORP MBOR VAC VAC I VAC II VBOR
	03	D25A D25B
	04	E36A E36B
	06	G12A G16A G38A G38B
	08	I17Z
	09	J02A J02B J08Z
	21B	X06A X06B X06C
76.46.00↔		BORP MBOR VAC VAC I VAC II VBOR
	03	D25A D25B
	04	E36A E36B
	06	G12A G16A G33Z G38A G38B G38C
	07	H33Z
	08	I17Z
	09	J02A J02B J08Z
	11	L33Z
	21B	X06A X06B X06C X07A X07B
76.46.10↔		BORP KORP MBOR MKOR VAC VAC I VAC II VB VBOR VKOR
	03	D02A D02B D24A D24B D25A D25B
	04	E36A E36B
	05	F04Z
	06	G12A G16A G33Z G38A G38B G38C
	07	H33Z
	08	I02A I02B I02C
	09	J01A J01B J02A J02B J08Z
	11	L33Z
	12	M37Z
	21A	W01A W01B
	21B	X01A X06A X06B X06C X07A X07B
	22	Y02A Y02B
76.46.99↔		BORP MBOR VAC VAC I VAC II VBOR
	03	D25A D25B
	04	E36A E36B
	06	G12A G16A G33Z G38A G38B G38C
	07	H33Z
	08	I17Z
	09	J02A J02B J08Z
	11	L33Z
	21B	X06A X06B X06C X07A X07B
76.5X.00↔		BORP MBOR VAC VAC I VAC II VBOR
	03	D12A D12B D25A D25B D28Z D29Z
	04	E36A E36B
	06	G12A G16A G38A G38B
	08	I17Z I23A I23B
	09	J02A J02B J03A J03B J04Z J08Z J11A J11B
	21B	X06A X06B X06C
76.5X.10↔		BORP MBOR VAC VAC I VAC II VBOR
	03	D12A D12B D25A D25B D28Z D29Z
	04	E36A E36B
	06	G12A G16A G38A G38B
	08	I17Z I23A I23B
	09	J02A J02B J03A J03B J04Z J08Z J11A J11B
	21B	X06A X06B X06C
76.5X.19↔		BORP MBOR VAC VAC I VAC II VBOR
	03	D12A D12B D25A D25B D28Z D29Z
	04	E36A E36B
	06	G12A G16A G38A G38B
	08	I17Z I23A I23B
	09	J02A J02B J03A J03B J04Z J08Z J11A J11B
	21B	X06A X06B X06C
76.5X.20↔		BORP MBOR VAC VAC I VAC II VBOR

CHOP	MDC	DRG
	03	D12A D12B D25A D25B D28Z D29Z
	04	E36A E36B
	06	G12A G16A G38A G38B
	08	I17Z I23A I23B
	09	J02A J02B J03A J03B J04Z J08Z J11A J11B
	21B	X06A X06B X06C
76.5X.29↔		BORP MBOR VAC VAC I VAC II VBOR
	03	D12A D12B D25A D25B D28Z D29Z
	04	E36A E36B
	06	G12A G16A G38A G38B
	08	I17Z I23A I23B
	09	J02A J02B J03A J03B J04Z J08Z J11A J11B
	21B	X06A X06B X06C
76.5X.30↔		BORP MBOR VAC VAC I VAC II VBOR
	03	D12A D12B D25A D25B D28Z D29Z
	04	E36A E36B
	06	G12A G16A G38A G38B
	08	I17Z I23A I23B
	09	J02A J02B J03A J03B J04Z J08Z J11A J11B
	21B	X06A X06B X06C
76.5X.39↔		BORP MBOR VAC VAC I VAC II VBOR
	03	D12A D12B D25A D25B D28Z D29Z
	04	E36A E36B
	06	G12A G16A G38A G38B
	08	I17Z I23A I23B
	09	J02A J02B J03A J03B J04Z J08Z J11A J11B
	21B	X06A X06B X06C
76.5X.40↔		BORP MBOR VAC VAC I VAC II VBOR
	03	D12A D12B D25A D25B D28Z D29Z
	04	E36A E36B
	06	G12A G16A G38A G38B
	08	I17Z I23A I23B
	09	J02A J02B J03A J03B J04Z J08Z J11A J11B
	21B	X06A X06B X06C
76.5X.41↔		BORP MBOR VAC VAC I VAC II VBOR
	03	D12A D12B D25A D25B D28Z D29Z
	04	E36A E36B
	06	G12A G16A G38A G38B
	08	I17Z I23A I23B
	09	J02A J02B J03A J03B J04Z J08Z J11A J11B
	21B	X06A X06B X06C
76.5X.42↔		BORP MBOR VAC VAC I VAC II VBOR
	03	D12A D12B D25A D25B D28Z D29Z
	04	E36A E36B
	06	G12A G16A G38A G38B
	08	I17Z I23A I23B
	09	J02A J02B J03A J03B J04Z J08Z J11A J11B
	21B	X06A X06B X06C
76.5X.50↔		BORP MBOR VAC VAC I VAC II VBOR
	03	D12A D12B D25A D25B D28Z D29Z
	04	E36A E36B
	06	G12A G16A G38A G38B
	08	I17Z I23A I23B
	09	J02A J02B J03A J03B J04Z J08Z J11A J11B
	21B	X06A X06B X06C
76.5X.59↔		BORP MBOR VAC VAC I VAC II VBOR
	03	D12A D12B D25A D25B D28Z D29Z
	04	E36A E36B
	06	G12A G16A G38A G38B
	08	I17Z I23A I23B
	09	J02A J02B J03A J03B J04Z J08Z J11A J11B
	21B	X06A X06B X06C
76.5X.60↔		BORP MBOR VAC VAC I VAC II VBOR
	03	D01A D12A D12B D25A D25B D28Z
	04	E36A E36B
	06	G12A G16A G38A G38B
	08	I17Z I23A I23B
	09	J02A J02B J03A J03B J04Z J08Z J11A J11B
	21B	X06A X06B X06C
76.5X.61↔		BORP MBOR VAC VAC I VAC II VBOR
	03	D01A D12A D12B D25A D25B D28Z
	04	E36A E36B
	06	G12A G16A G38A G38B
	08	I17Z I23A I23B
	09	J02A J02B J03A J03B J04Z J08Z J11A J11B
	21B	X06A X06B X06C
76.5X.70↔		BORP MBOR VAC VAC I VAC II VBOR
	03	D01A
	04	E36A E36B
	06	G12A G16A G38A G38B
	08	I17Z I23A I23B
	09	J02A J02B J03A J03B J04Z J08Z J11A J11B
	21B	X06A X06B X06C
76.5X.71↔		BORP MBOR VAC VAC I VAC II VBOR
	03	D01A
	04	E36A E36B
	06	G12A G16A G38A G38B
	08	I17Z I23A I23B
	09	J02A J02B J03A J03B J04Z J08Z J11A J11B
	21B	X06A X06B X06C
76.5X.90↔		BORP MBOR VAC VAC I VAC II VBOR
	03	D12A D12B D25A D25B D28Z D29Z
	04	E36A E36B
	06	G12A G16A G38A G38B
	08	I17Z I23A I23B
	09	J02A J02B J03A J03B J04Z J08Z J11A J11B
	21B	X06A X06B X06C
76.5X.99↔		BORP MBOR VAC VAC I VAC II VBOR
	03	D12A D12B D25A D25B D28Z D29Z
	04	E36A E36B
	06	G12A G16A G38A G38B
	08	I17Z I23A I23B
	09	J02A J02B J03A J03B J04Z J08Z J11A J11B
	21B	X06A X06B X06C
76.61.00↔		BORP MBOR VAC VBOR
	03	D25A D25B D28Z D29Z
	04	E36A E36B
	06	G12A G16A G38A G38B
	08	I17Z
	09	J02A J02B J08Z
	21B	X06A X06B X06C
76.61.10↔		BORP MBOR VAC VBOR
	03	D25A D25B D28Z D29Z
	04	E36A E36B
	06	G12A G16A G38A G38B
	08	I17Z
	09	J02A J02B J08Z
	21B	X06A X06B X06C
76.61.20↔		BORP MBOR VAC VBOR
	03	D25A D25B D28Z D29Z
	04	E36A E36B
	06	G12A G16A G38A G38B
	08	I17Z
	09	J02A J02B J08Z
	21B	X06A X06B X06C
76.61.99↔		BORP MBOR VAC VBOR
	03	D25A D25B D28Z D29Z

PROC

PROC

CHOP	MDC	DRG
	04	E36A E36B
	06	G12A G16A G38A G38B
	08	I17Z
	09	J02A J02B J08Z
	21B	X06A X06B X06C
76.62.00↔		BORP MBOR VAC VAC I VAC II VBOR
	03	D04Z D25A D25B D28Z D29Z
	04	E36A E36B
	06	G12A G16A G38A G38B
	08	I17Z
	09	J02A J02B J08Z
	21B	X06A X06B X06C
76.62.10↔		BORP MBOR VAC VAC I VAC II VBOR
	03	D04Z D25A D25B D28Z D29Z
	04	E36A E36B
	06	G12A G16A G38A G38B
	08	I17Z
	09	J02A J02B J08Z
	21B	X06A X06B X06C
76.62.20↔		BORP MBOR VAC VAC I VAC II VBOR
	03	D04Z D25A D25B D28Z D29Z
	04	E36A E36B
	06	G12A G16A G38A G38B
	08	I17Z
	09	J02A J02B J08Z
	21B	X06A X06B X06C
76.62.99↔		BORP MBOR VAC VAC I VAC II VBOR
	03	D04Z D25A D25B D28Z D29Z
	04	E36A E36B
	06	G12A G16A G38A G38B
	08	I17Z
	09	J02A J02B J08Z
	21B	X06A X06B X06C
76.63.00↔		BORP MBOR VAC VAC I VAC II VBOR
	03	D04Z D25A D25B D28Z D29Z
	04	E36A E36B
	06	G12A G16A G38A G38B
	08	I17Z
	09	J02A J02B J03A J03B J04Z J08Z J11A J11B
	21B	X06A X06B X06C
76.63.10↔		BORP MBOR VAC VAC I VAC II VBOR
	03	D04Z D25A D25B D28Z D29Z
	04	E36A E36B
	06	G12A G16A G38A G38B
	08	I17Z
	09	J02A J02B J03A J03B J04Z J08Z J11A J11B
	21B	X06A X06B X06C
76.63.11↔		BORP MBOR VAC VAC I VAC II VBOR
	03	D04Z D25A D25B D28Z D29Z
	04	E36A E36B
	06	G12A G16A G38A G38B
	08	I17Z
	09	J02A J02B J03A J03B J04Z J08Z J11A J11B
	21B	X06A X06B X06C
76.63.12↔		BORP MBOR VAC VAC I VAC II VBOR
	03	D04Z D25A D25B D28Z D29Z
	04	E36A E36B
	06	G12A G16A G38A G38B
	08	I17Z
	09	J02A J02B J03A J03B J04Z J08Z J11A J11B
	21B	X06A X06B X06C
76.63.20↔		BORP MBOR VAC VAC I VAC II VBOR
	03	D04Z D25A D25B D28Z D29Z
	04	E36A E36B
	06	G12A G16A G38A G38B
	08	I17Z
	09	J02A J02B J03A J03B J04Z J08Z J11A J11B
	21B	X06A X06B X06C
76.63.21↔		BORP MBOR VAC VAC I VAC II VBOR
	03	D04Z D25A D25B D28Z D29Z
	04	E36A E36B
	06	G12A G16A G38A G38B
	08	I17Z
	09	J02A J02B J03A J03B J04Z J08Z J11A J11B
	21B	X06A X06B X06C
76.63.99↔		BORP MBOR VAC VAC I VAC II VBOR
	03	D04Z D25A D25B D28Z D29Z
	04	E36A E36B
	06	G12A G16A G38A G38B
	08	I17Z
	09	J02A J02B J03A J03B J04Z J08Z J11A J11B
	21B	X06A X06B X06C
76.64↔		BORP MBOR VAC VAC I VAC II VBOR
	03	D04Z D25A D25B D28Z D29Z
	04	E36A E36B
	06	G12A G16A G38A G38B
	08	I17Z
	09	J02A J02B J03A J03B J04Z J08Z J10A J10B
	21B	X06A X06B X06C
	22	Y02A Y02B Y02C
76.65.00↔		BORP MBOR VAC VAC I VAC II VBOR
	03	D04Z D25A D25B D28Z D29Z
	04	E36A E36B
	06	G12A G16A G38A G38B
	08	I17Z
	09	J02A J02B J08Z
	21B	X06A X06B X06C
76.65.10↔		BORP MBOR VAC VAC I VAC II VBOR
	03	D04Z D25A D25B D28Z D29Z
	04	E36A E36B
	06	G12A G16A G38A G38B
	08	I17Z
	09	J02A J02B J08Z
	21B	X06A X06B X06C
76.65.20↔		BORP MBOR VAC VAC I VAC II VBOR
	03	D04Z D25A D25B D28Z D29Z
	04	E36A E36B
	06	G12A G16A G38A G38B
	08	I17Z
	09	J02A J02B J08Z
	21B	X06A X06B X06C
76.65.21↔		BORP MBOR VAC VAC I VAC II VBOR
	03	D04Z D25A D25B D28Z D29Z
	04	E36A E36B
	06	G12A G16A G38A G38B
	08	I17Z
	09	J02A J02B J08Z
	21B	X06A X06B X06C
76.65.22↔		BORP MBOR VAC VAC I VAC II VBOR
	03	D04Z D25A D25B D28Z D29Z
	04	E36A E36B
	06	G12A G16A G38A G38B
	08	I17Z
	09	J02A J02B J08Z
	21B	X06A X06B X06C
76.65.99↔		BORP MBOR VAC VAC I VAC II VBOR
	03	D04Z D25A D25B D28Z D29Z
	04	E36A E36B
	06	G12A G16A G38A G38B
	08	I17Z
	09	J02A J02B J08Z
	21B	X06A X06B X06C
76.66.00↔		BORP MBOR VAC VAC I VAC II VBOR
	03	D04Z D25A D25B D28Z D29Z
	04	E36A E36B
	06	G12A G16A G38A G38B

CHOP	MDC	DRG
	08	I17Z
	09	J02A J02B J08Z
	21B	X06A X06B X06C
76.66.10↔		BORP MBOR VAC VAC I VAC II VBOR
	03	D04Z D25A D25B D28Z D29Z
	04	E36A E36B
	06	G12A G16A G38A G38B
	08	I17Z
	09	J02A J02B J08Z
	21B	X06A X06B X06C
76.66.20↔		BORP MBOR VAC VAC I VAC II VBOR
	03	D04Z D25A D25B D28Z D29Z
	04	E36A E36B
	06	G12A G16A G38A G38B
	08	I17Z
	09	J02A J02B J08Z
	21B	X06A X06B X06C
76.66.21↔		BORP MBOR VAC VAC I VAC II VBOR
	03	D04Z D25A D25B D28Z D29Z
	04	E36A E36B
	06	G12A G16A G38A G38B
	08	I17Z
	09	J02A J02B J08Z
	21B	X06A X06B X06C
76.66.22↔		BORP MBOR VAC VAC I VAC II VBOR
	03	D04Z D25A D25B D28Z D29Z
	04	E36A E36B
	06	G12A G16A G38A G38B
	08	I17Z
	09	J02A J02B J08Z
	21B	X06A X06B X06C
76.66.30↔		BORP MBOR VAC VAC I VAC II VBOR
	03	D04Z D25A D25B D28Z D29Z
	04	E36A E36B
	06	G12A G16A G38A G38B
	08	I17Z
	09	J02A J02B J08Z
	21B	X06A X06B X06C
76.66.99↔		BORP MBOR VAC VAC I VAC II VBOR
	03	D04Z D25A D25B D28Z D29Z
	04	E36A E36B
	06	G12A G16A G38A G38B
	08	I17Z
	09	J02A J02B J08Z
	21B	X06A X06B X06C
76.67↔		BORP MBOR VAC VAC I VAC II VBOR
	03	D25A D25B
	04	E36A E36B
	06	G12A G16A G38A G38B
	08	I17Z
	09	J02A J02B J08Z
	21B	X06A X06B X06C
76.68↔		BORP MBOR VAC VAC I VAC II VBOR
	03	D25A D25B
	04	E36A E36B
	06	G12A G16A G38A G38B
	08	I17Z
	09	J02A J02B J08Z
	21B	X06A X06B X06C
76.69.10↔		BORP MBOR VAC VAC I VAC II VBOR
	03	D24A D24B D24C D25A D25B
	04	E36A E36B
	06	G12A G16A G38A G38B
	08	I17Z
	09	J02A J02B J08Z
	21B	X06A X06B X06C
76.69.20↔		BORP MBOR VAC VAC I VAC II VBOR
	03	D24A D24B D24C D25A D25B
	04	E36A E36B
	06	G12A G16A G38A G38B
	08	I17Z
	09	J02A J02B J08Z
	21B	X06A X06B X06C
76.69.21↔		BORP MBOR VAC VAC I VAC II VBOR
	03	D24A D24B D24C D25A D25B
	04	E36A E36B
	06	G12A G16A G38A G38B
	08	I17Z
	09	J02A J02B J08Z
	21B	X06A X06B X06C
76.69.30↔		BORP MBOR VAC VAC I VAC II VBOR
	03	D24A D24B D24C D25A D25B
	04	E36A E36B
	06	G12A G16A G38A G38B
	08	I17Z
	09	J02A J02B J08Z
	21B	X06A X06B X06C
76.69.40↔		BORP MBOR VAC VAC I VAC II VBOR
	03	D24A D24B D24C D25A D25B
	04	E36A E36B
	06	G12A G16A G38A G38B
	08	I17Z
	09	J02A J02B J08Z
	21B	X06A X06B X06C
76.69.90↔		BORP MBOR VAC VAC I VAC II VBOR
	03	D25A D25B
	04	E36A E36B
	06	G12A G16A G38A G38B
	08	I17Z
	09	J02A J02B J08Z
	21B	X06A X06B X06C
76.70↔		BORP MBOR VAC VBOR
	01	B09A B09B B09C B09D
	03	D25A D25B D28Z D29Z
	04	E36A E36B
	06	G12A G16A G38A G38B
	08	I17Z
	09	J02A J02B J08Z
	21B	X06A X06B X06C
76.72↔		BORP MBOR VAC VAC I VAC II VBOR
	01	B09A B09B B09C B09D
	03	D04Z D25A D25B D28Z D29Z
	04	E36A E36B
	06	G12A G16A G38A G38B
	08	I17Z
	09	J02A J02B J08Z
	21B	X06A X06B X06C
76.74↔		BORP MBOR VAC VAC I VAC II VBOR
	03	D04Z D25A D25B D28Z D29Z
	04	E36A E36B
	06	G12A G16A G38A G38B
	08	I17Z
	09	J02A J02B J08Z
	21B	X06A X06B X06C
76.76.00↔		BORP MBOR VAC VAC I VAC II VBOR
	03	D04Z D25A D25B D28Z D29Z
	04	E36A E36B
	06	G12A G16A G38A G38B
	08	I17Z
	09	J02A J02B J08Z
	21B	X06A X06B X06C
76.76.10↔		BORP MBOR VAC VAC I VAC II VBOR
	03	D04Z D25A D25B D28Z D29Z
	04	E36A E36B
	06	G12A G16A G38A G38B
	08	I17Z
	09	J02A J02B J08Z
	21B	X06A X06B X06C
76.76.11↔		BORP MBOR VAC VAC I VAC II VBOR
	03	D04Z D25A D25B D28Z D29Z
	04	E36A E36B
	06	G12A G16A G38A G38B
	08	I17Z
	09	J02A J02B J08Z
	21B	X06A X06B X06C
76.76.20↔		BORP MBOR VAC VAC I VAC II VBOR
	03	D04Z D25A D25B D28Z D29Z
	04	E36A E36B
	06	G12A G16A G38A

PROC

CHOP	MDC	DRG
		G38B
	08	I17Z
	09	J02A J02B J08Z
	21B	X06A X06B X06C
76.76.21↔		BORP MBOR VAC
		VAC I VAC II VBOR
	03	D04Z D25A D25B
		D28Z D29Z
	04	E36A E36B
	06	G12A G16A G38A
		G38B
	08	I17Z
	09	J02A J02B J08Z
	21B	X06A X06B X06C
76.76.30↔		BORP MBOR VAC
		VAC I VAC II VBOR
	03	D04Z D25A D25B
		D28Z D29Z
	04	E36A E36B
	06	G12A G16A G38A
		G38B
	08	I17Z
	09	J02A J02B J08Z
	21B	X06A X06B X06C
76.76.99↔		BORP MBOR VAC
		VAC I VAC II VBOR
	03	D04Z D25A D25B
		D28Z D29Z
	04	E36A E36B
	06	G12A G16A G38A
		G38B
	08	I17Z
	09	J02A J02B J08Z
	21B	X06A X06B X06C
76.77.00↔		BORP MBOR VAC
		VAC I VAC II VBOR
	03	D04Z D25A D25B
		D28Z D29Z
	04	E36A E36B
	06	G12A G16A G38A
		G38B
	08	I17Z
	09	J02A J02B J08Z
	21B	X06A X06B X06C
76.77.10↔		BORP MBOR VAC
		VAC I VAC II VBOR
	03	D04Z D25A D25B
		D28Z D29Z
	04	E36A E36B
	06	G12A G16A G38A
		G38B
	08	I17Z
	09	J02A J02B J08Z
	21B	X06A X06B X06C
76.77.11↔		BORP MBOR VAC
		VAC I VAC II VBOR
	03	D04Z D25A D25B
		D28Z D29Z
	04	E36A E36B
	06	G12A G16A G38A
		G38B
	08	I17Z
	09	J02A J02B J08Z
	21B	X06A X06B X06C
76.77.99↔		BORP MBOR VAC
		VAC I VAC II VBOR
	03	D04Z D25A D25B
		D28Z D29Z
	04	E36A E36B
	06	G12A G16A G38A

CHOP	MDC	DRG
		G38B
	08	I17Z
	09	J02A J02B J08Z
	21B	X06A X06B X06C
76.78.11↔		BORP MBOR VAC
		VBOR
	01	B09A B09B B09C
		B09D
	03	D25A D25B D28Z
		D29Z
	04	E36A E36B
	06	G12A G16A G38A
		G38B
	08	I17Z
	09	J02A J02B J08Z
	21B	X06A X06B X06C
76.78.20↔	03	D25A D25B D28Z
		D29Z
76.78.21↔		BORP MBOR VAC
		VBOR
	01	B09A B09B B09C
		B09D
	03	D25A D25B D28Z
		D29Z
	04	E36A E36B
	06	G12A G16A G38A
		G38B
	08	I17Z
	09	J02A J02B J08Z
	21B	X06A X06B X06C
76.79.00↔		BORP MBOR VAC
		VAC I VAC II VBOR
	01	B09A B09B B09C
		B09D
	03	D25A D25B D28Z
		D29Z
	04	E36A E36B
	06	G12A G16A G38A
		G38B
	08	I17Z
	09	J02A J02B J08Z
	21B	X06A X06B X06C
76.79.10↔		BORP MBOR VAC
		VAC I VAC II VBOR
	01	B09A B09B B09C
		B09D
	03	D25A D25B D28Z
		D29Z
	04	E36A E36B
	06	G12A G16A G38A
		G38B
	08	I17Z
	09	J02A J02B J08Z
	21B	X06A X06B X06C
76.79.11↔		BORP MBOR VAC
		VAC I VAC II VBOR
	01	B09A B09B B09C
		B09D
	03	D25A D25B D28Z
		D29Z
	04	E36A E36B
	06	G12A G16A G38A
		G38B
	08	I17Z
	09	J02A J02B J08Z
	21B	X06A X06B X06C
76.79.19↔		BORP MBOR VAC
		VAC I VAC II VBOR
	01	B09A B09B B09C
		B09D

CHOP	MDC	DRG
	03	D25A D25B D28Z
		D29Z
	04	E36A E36B
	06	G12A G16A G38A
		G38B
	08	I17Z
	09	J02A J02B J08Z
	21B	X06A X06B X06C
76.79.20↔		BORP MBOR VAC
		VAC I VAC II VBOR
	01	B09A B09B B09C
		B09D
	03	D25A D25B D28Z
		D29Z
	04	E36A E36B
	06	G12A G16A G38A
		G38B
	08	I17Z
	09	J02A J02B J08Z
	21B	X06A X06B X06C
76.79.30↔		BORP MBOR VAC
		VAC I VAC II VBOR
	01	B09A B09B B09C
		B09D
	03	D25A D25B D28Z
		D29Z
	04	E36A E36B
	06	G12A G16A G38A
		G38B
	08	I17Z
	09	J02A J02B J08Z
	21B	X06A X06B X06C
76.79.31↔		BORP MBOR VAC
		VAC I VAC II VBOR
	01	B09A B09B B09C
		B09D
	03	D25A D25B D28Z
		D29Z
	04	E36A E36B
	06	G12A G16A G38A
		G38B
	08	I17Z
	09	J02A J02B J08Z
	21B	X06A X06B X06C
76.79.39↔		BORP MBOR VAC
		VAC I VAC II VBOR
	01	B09A B09B B09C
		B09D
	03	D25A D25B D28Z
		D29Z
	04	E36A E36B
	06	G12A G16A G38A
		G38B
	08	I17Z
	09	J02A J02B J08Z
	21B	X06A X06B X06C
76.79.40↔		BORP MBOR VAC
		VAC I VAC II VBOR
	01	B09A B09B B09C
		B09D
	03	D04Z D25A D25B
		D28Z D29Z
	04	E36A E36B
	06	G12A G16A G38A
		G38B
	08	I17Z
	09	J02A J02B J08Z
	21B	X06A X06B X06C
76.79.99↔		BORP MBOR VAC
		VAC I VAC II VBOR

CHOP	MDC	DRG
	01	B09A B09B B09C B09D
	03	D25A D25B D28Z D29Z
	04	E36A E36B
	06	G12A G16A G38A G38B
	08	I17Z
	09	J02A J02B J08Z
	21B	X06A X06B X06C
76.91.00↔		BORP MBOR VAC VAC I VAC II VBOR
	03	D25A D25B
	04	E36A E36B
	06	G12A G16A G38A G38B
	08	I17Z
	09	J02A J02B J08Z
	21B	X06A X06B X06C
76.91.10↔		BORP MBOR VAC VAC I VAC II VBOR
	03	D25A D25B
	04	E36A E36B
	06	G12A G16A G38A G38B
	08	I17Z
	09	J02A J02B J08Z
	21B	X06A X06B X06C
76.91.11↔		BORP KORP MBOR MKOR VAC VAC I VAC II VBOR VKOR
	03	D24A D24B D24C
	04	E36A E36B
	06	G12A G16A G38A G38B
	08	I17Z
	09	J02A J02B J08Z
	21B	X06A X06B X06C
76.91.99↔		BORP MBOR VAC VAC I VAC II VBOR
	03	D25A D25B
	04	E36A E36B
	06	G12A G16A G38A G38B
	08	I17Z
	09	J02A J02B J08Z
	21B	X06A X06B X06C
76.92.00‡↔	01	B60A
	02	C14Z
76.92.10‡↔	01	B60A
	02	C14Z
76.92.20↔		BORP KORP MBOR MKOR VAC VAC I VAC II VBOR VKOR
	01	B01A B02A B02B B09B B20A B20B B20C B20D
	02	C14Z
	03	D02A D24A D24B D24C D25A
	04	E36A E36B
	06	G12A G16A G33Z G38A G38B G38C
	07	H33Z
	08	I15A I15B
	09	J02A J02B J08Z
	11	L33Z
	21A	W01A W01B W01C
	21B	X06A X06B X07A X07B
76.92.21↔		BORP KORP MBOR MKOR VAC VAC I VAC II VBOR VKOR
	01	B01A B02A B02B B09B B20A B20B B20C B20D
	02	C14Z
	03	D02A D24A D24B D24C D25A
	04	E36A E36B
	06	G12A G16A G33Z G38A G38B G38C
	07	H33Z
	08	I15A
	09	J02A J02B J08Z
	11	L33Z
	21A	W01A W01B W01C
	21B	X06A X06B X06C X07A X07B
76.92.30↔		BORP KORP MBOR MKOR VAC VAC I VAC II VBOR VKOR
	01	B01A B02A B02B B20A B20B B20C B20D
	03	D02A D02B D24A D24B D24C D25A D25B
	04	E36A E36B
	06	G12A G16A G33Z G38A G38B G38C
	07	H33Z
	08	I15A I15B
	09	J02A J02B J08Z
	11	L33Z
	21A	W01A W01B W01C
	21B	X06A X06B X07A X07B
76.92.31↔		BORP KORP MBOR MKOR VAC VAC I VAC II VBOR VKOR
	01	B01A B02A B02B B09B B20A B20B B20C B20D
	03	D02A D24A D24B D24C D25A
	04	E36A E36B
	06	G12A G16A G33Z G38A G38B G38C
	07	H33Z
	08	I15A
	09	J02A J02B J08Z
	11	L33Z
	21A	W01A W01B W01C
	21B	X06A X06B X07A X07B
76.92.99‡↔	01	B60A
	02	C14Z
76.94↔		BORP MBOR VAC VAC I VAC II VBOR
	03	D25A D25B D28Z D29Z
	04	E36A E36B
	06	G12A G16A G38A G38B
	08	I17Z
	09	J02A J02B J08Z
	21B	X06A X06B X06C
76.97↔		BORP MBOR VAC VAC I VAC II VBOR
	01	B09A B09B B09C B09D
	03	D16Z
	04	E36A E36B
	06	G12A G16A G38A G38B
	08	I23A I23B I23C
	21B	X06A X06B X06C
77.00↔		BORP MBOR VAC VAC I VAC II VBOR
	04	E36A E36B
	05	F04Z F13A F13B
	06	G12A G16A G38A G38B
	08	I02A I02B I02C I12A I12B I12C I23A I23B
	21B	X06A X06B X06C
	Prä	B61B B61C B61D
77.01.00↔		BORP EML MBOR VAC VAC I VAC II VBOR
	04	E02A E02B E02C E36A E36B
	05	F04Z F13A F13B
	06	G12A G16A G38A G38B
	08	I02A I02B I02C I12A I12B I12C I23A I23B
	Prä	B61B B61C B61D
77.01.10↔		BORP EML MBOR VAC VAC I VAC II VBOR
	04	E02A E02B E02C E36A E36B
	05	F04Z F13A F13B
	06	G12A G16A G38A G38B
	08	I02A I02B I02C I12A I12B I12C I23A I23B
	Prä	B61B B61C B61D
77.01.11↔		BORP EML MBOR VAC VAC I VAC II VBOR
	04	E02A E02B E02C E36A E36B
	05	F04Z F13A F13B
	06	G12A G16A G38A G38B
	08	I02A I02B I02C I12A I12B I12C I23A I23B
	Prä	B61B B61C B61D
77.01.20↔		BORP EML MBOR VAC VAC I VAC II VBOR
	04	E02A E02B E02C E36A E36B
	05	F04Z F13A F13B
	06	G12A G16A G38A G38B
	08	I02A I02B I02C I12A I12B I12C I23A I23B
	Prä	B61B B61C B61D
77.01.21↔		BORP EML MBOR VAC VAC I VAC II VBOR

PROC

CHOP	MDC	DRG
	04	E02A E02B E02C E36A E36B
	05	F04Z F13A F13B
	06	G12A G16A G38A G38B
	08	I02A I02B I02C I12A I12B I12C I23A I23B
	Prä	B61B B61C B61D
77.01.99↔		BORP EML MBOR VAC VAC I VAC II VBOR
	04	E02A E02B E02C E36A E36B
	05	F04Z F13A F13B
	06	G12A G16A G38A G38B
	08	I02A I02B I02C I12A I12B I12C I23A I23B
	Prä	B61B B61C B61D
77.02.00↔		BORP EML MBOR VAC VAC I VAC II VBOR
	04	E36A E36B
	05	F04Z F13A F13B
	06	G12A G16A G38A G38B
	08	I02A I02B I02C I12A I12B I12C I13A I13B I13C I13D
	21B	X06A X06B X06C
	Prä	B61B B61C B61D
77.02.10↔		BORP EML MBOR VAC VAC I VAC II VBOR
	04	E36A E36B
	05	F04Z F13A F13B
	06	G12A G16A G38A G38B
	08	I02A I02B I02C I12A I12B I12C I13A I13B I13C I13D
	21B	X06A X06B X06C
	Prä	B61B B61C B61D
77.02.11↔		BORP EML MBOR VAC VAC I VAC II VBOR
	04	E36A E36B
	05	F04Z F13A F13B
	06	G12A G16A G38A G38B
	08	I02A I02B I02C I12A I12B I12C I13A I13B I13C I13D
	21B	X06A X06B X06C
	Prä	B61B B61C B61D
77.02.99↔		BORP EML MBOR VAC VAC I VAC II VBOR
	04	E36A E36B
	05	F04Z F13A F13B
	06	G12A G16A G38A G38B
	08	I02A I02B I02C I12A I12B I12C I13A I13B I13C I13D
	21B	X06A X06B X06C
	Prä	B61B B61C B61D
77.03.00↔		BORP EML MBOR VAC VAC I VAC II VBOR
	04	E36A E36B
	05	F04Z F13A F13B
	06	G12A G16A G38A G38B
	08	I23A I23B
77.03.10↔		BORP EML MBOR VAC VAC I VAC II VBOR
	04	E36A E36B
	05	F04Z F13A F13B
	06	G12A G16A G38A G38B
	08	I23A I23B
77.03.11↔		BORP EML MBOR VAC VAC I VAC II VBOR
	04	E36A E36B
	05	F04Z F13A F13B
	06	G12A G16A G38A G38B
	08	I23A I23B
77.03.99↔		BORP EML MBOR VAC VAC I VAC II VBOR
	04	E36A E36B
	05	F04Z F13A F13B
	06	G12A G16A G38A G38B
	08	I23A I23B
77.04.00↔		BORP EML MBOR VAC VAC I VAC II VBOR
	04	E36A E36B
	05	F04Z F13A F13B
	06	G12A G16A G38A G38B
	08	I02A I02B I02C I12A I12B I12C I32A I32B I32C I32D I32E I32F
	21B	X05Z
	Prä	B61B B61C B61D
77.04.10↔		BORP EML MBOR VAC VAC I VAC II VBOR
	04	E36A E36B
	05	F04Z F13A F13B
	06	G12A G16A G38A G38B
	08	I02A I02B I02C I12A I12B I12C I32A I32B I32C I32D I32E I32F
	21B	X05Z
	Prä	B61B B61C B61D
77.04.11↔		BORP EML MBOR VAC VAC I VAC II VBOR
	04	E36A E36B
	05	F04Z F13A F13B
	06	G12A G16A G38A G38B
	08	I02A I02B I02C I12A I12B I12C I32A I32B I32C I32D I32E I32F
	21B	X05Z
	Prä	B61B B61C B61D
77.04.99↔		BORP EML MBOR VAC VAC I VAC II VBOR
	04	E36A E36B
	05	F04Z F13A F13B
	06	G12A G16A G38A G38B
	08	I02A I02B I02C I12A I12B I12C I32A I32B I32C I32D I32E I32F
	21B	X05Z
	Prä	B61B B61C B61D
77.05.00↔		BORP EML MBOR VAC VAC I VAC II VBOR
	04	E36A E36B
	05	F04Z F13A F13B
	06	G12A G16A G38A G38B
	08	I02A I02B I02C I12A I12B I12C I21A I21B
	21B	X04Z
	Prä	B61B B61C B61D
77.05.10↔		BORP EML MBOR VAC VAC I VAC II VBOR
	04	E36A E36B
	05	F04Z F13A F13B
	06	G12A G16A G38A G38B
	08	I02A I02B I02C I12A I12B I12C I21A I21B
	21B	X04Z
	Prä	B61B B61C B61D
77.05.11↔		BORP EML MBOR VAC VAC I VAC II VBOR
	04	E36A E36B
	05	F04Z F13A F13B
	06	G12A G16A G38A G38B
	08	I02A I02B I02C I12A I12B I12C I21A I21B
	21B	X04Z
	Prä	B61B B61C B61D
77.05.99↔		BORP EML MBOR VAC VAC I VAC II VBOR
	04	E36A E36B
	05	F04Z F13A F13B
	06	G12A G16A G38A G38B
	08	I02A I02B I02C I12A I12B I12C I21A I21B
	21B	X04Z
	Prä	B61B B61C B61D
77.06.00↔		BORP EML MBOR VAC VAC I VAC II VBOR
	04	E36A E36B
	05	F04Z F13A F13B

CHOP	MDC	DRG
	06	G12A G16A G38A G38B
	08	I02A I02B I02C I12A I12B I12C I23A I23B
	21B	X04Z X06A X06B X06C
	Prä	B61B B61C B61D
77.06.10↔		BORP EML MBOR VAC VAC I VAC II VBOR
	04	E36A E36B
	05	F04Z F13A F13B
	06	G12A G16A G38A G38B
	08	I02A I02B I02C I12A I12B I12C I23A I23B
	21B	X04Z X06A X06B X06C
	Prä	B61B B61C B61D
77.06.11↔		BORP EML MBOR VAC VAC I VAC II VBOR
	04	E36A E36B
	05	F04Z F13A F13B
	06	G12A G16A G38A G38B
	08	I02A I02B I02C I12A I12B I12C I23A I23B
	21B	X04Z X06A X06B X06C
	Prä	B61B B61C B61D
77.06.99↔		BORP EML MBOR VAC VAC I VAC II VBOR
	04	E36A E36B
	05	F04Z F13A F13B
	06	G12A G16A G38A G38B
	08	I02A I02B I02C I12A I12B I12C I23A I23B
	21B	X04Z X06A X06B X06C
	Prä	B61B B61C B61D
77.07.00↔		BORP EML MBOR VAC VAC I VAC II VBOR
	04	E36A E36B
	05	F04Z F13A F13B
	06	G12A G16A G38A G38B
	08	I02A I02B I02C I12A I12B I12C I23A I23B
	21B	X04Z
	Prä	B61B B61C B61D
77.07.10↔		BORP EML MBOR VAC VAC I VAC II VBOR
	04	E36A E36B
	05	F04Z F13A F13B
	06	G12A G16A G38A G38B
	08	I02A I02B I02C I12A I12B I12C I23A I23B
	21B	X04Z
	Prä	B61B B61C B61D
77.07.11↔		BORP EML MBOR VAC VAC I VAC II VBOR
	04	E36A E36B
	05	F04Z F13A F13B
	06	G12A G16A G38A G38B
	08	I02A I02B I02C I12A I12B I12C I23A I23B
	21B	X04Z
	Prä	B61B B61C B61D
77.07.99↔		BORP EML MBOR VAC VAC I VAC II VBOR
	04	E36A E36B
	05	F04Z F13A F13B
	06	G12A G16A G38A G38B
	08	I02A I02B I02C I12A I12B I12C I23A I23B
	21B	X04Z
	Prä	B61B B61C B61D
77.08.10↔		BORP EML MBOR VAC VAC I VAC II VBOR
	04	E36A E36B
	05	F04Z F13A F13B F13C
	06	G12A G16A G38A G38B
	08	I02A I02B I02C I12A I12B I12C I20A I20B I20C I20D I20E I20F I20G
	21B	X04Z
	Prä	B61B B61C B61D
77.08.11↔		BORP EML MBOR VAC VAC I VAC II VBOR
	04	E36A E36B
	05	F04Z F13A F13B F13C
	06	G12A G16A G38A G38B
	08	I02A I02B I02C I12A I12B I12C I20A I20B I20C I20D I20E I20F I20G
	21B	X04Z
	Prä	B61B B61C B61D
77.08.99↔		BORP EML MBOR VAC VAC I VAC II VBOR
	04	E36A E36B
	05	F04Z F13A F13B F13C
	06	G12A G16A G38A G38B
	08	I02A I02B I02C I12A I12B I12C I20A I20B I20C I20D I20E I20F I20G
	21B	X04Z
	Prä	B61B B61C B61D
77.09.00↔		BORP MBOR VAC VAC I VAC II VBOR
	04	E36A E36B
	05	F04Z F13A F13B
	06	G12A G16A G38A G38B
	08	I02A I02B I02C I12A I12B I12C I23A I23B
	21B	X04Z X05Z X06A X06B X06C
	Prä	B61B B61C B61D
77.09.10↔		BORP EML MBOR VAC VAC I VAC II VBOR
	04	E36A E36B
	05	F04Z F13A F13B
	06	G12A G16A G38A G38B
	08	I02A I02B I02C I12A I12B I12C I23A I23B
	21B	X04Z X05Z X06A X06B X06C
	Prä	B61B B61C B61D
77.09.11↔		BORP EML MBOR VAC VAC I VAC II VBOR
	04	E36A E36B
	05	F04Z F13A F13B
	06	G12A G16A G38A G38B
	08	I02A I02B I02C I12A I12B I12C I23A I23B
	21B	X04Z X05Z X06A X06B X06C
	Prä	B61B B61C B61D
77.09.30↔		EML
	05	F04Z F13A F13B
	08	I02A I02B I02C I12A I12B I12C I23A I23B
	21B	X04Z X05Z X06A X06B X06C
	Prä	B61B B61C B61D
77.09.31↔		EML
	05	F04Z F13A F13B
	08	I02A I02B I02C I12A I12B I12C I23A I23B
	21B	X04Z X05Z X06A X06B X06C
	Prä	B61B B61C B61D
77.09.40↔		EML
	05	F04Z F13A F13B F13C
	08	I02A I02B I02C I12A I12B I12C I23A I23B
	21B	X04Z X05Z X06A X06B X06C
	Prä	B61B B61C B61D
77.09.41↔		EML
	05	F04Z F13A F13B F13C
	08	I02A I02B I02C I12A I12B I12C I23A I23B
	21B	X04Z X05Z X06A

PROC

PROC

CHOP	MDC	DRG
		X06B X06C
	Prä	B61B B61C B61D
77.09.90↔	Prä	B61B B61C B61D
	05	F04Z F13A F13B F13C
	08	I02A I02B I02C I12A I12B I12C I23A I23B
	21B	X04Z X05Z X06A X06B X06C
77.09.91↔	Prä	B61B B61C B61D
	05	F04Z F13A F13B F13C
	08	I02A I02B I02C I12A I12B I12C I23A I23B
	21B	X04Z X05Z X06A X06B X06C
77.09.99↔	Prä	B61B B61C B61D
	05	F04Z F13A F13B F13C
	08	I02A I02B I02C I12A I12B I12C I23A I23B
	21B	X04Z X05Z X06A X06B X06C
77.11.10↔		BORP MBOR VAC VAC I VAC II VBOR
	04	E02A E02B E02C E36A E36B
	06	G12A G16A G38A G38B
	08	I02A I02B I02C I12A I12B I12C I28A I28B I28C
	Prä	B61B B61C B61D
77.11.11↔		BORP MBOR VAC VAC I VAC II VBOR
	04	E02A E02B E02C E36A E36B
	06	G12A G16A G38A G38B
	08	I02A I02B I02C I12A I12B I12C I28A I28B I28C
	Prä	B61B B61C B61D
77.11.12↔		BORP MBOR VAC VAC I VAC II VBOR
	04	E02A E02B E02C E36A E36B
	06	G12A G16A G38A G38B
	08	I02A I02B I02C I12A I12B I12C I28A I28B I28C
	Prä	B61B B61C B61D
77.11.13↔		BORP MBOR VAC VBOR
	04	E02A E02B E02C E36A E36B
	06	G12A G16A G38A G38B
	08	I02A I02B I02C I12A I12B I12C I28A I28B I28C
	Prä	B61B B61C B61D
77.11.20↔		BORP MBOR VAC VAC I VAC II VBOR
	04	E02A E02B E02C E36A E36B
	06	G12A G16A G38A G38B
	08	I02A I02B I02C I12A I12B I12C I28A I28B I28C
	Prä	B61B B61C B61D
77.11.21↔		BORP MBOR VAC VAC I VAC II VBOR
	04	E02A E02B E02C E36A E36B
	06	G12A G16A G38A G38B
	08	I02A I02B I02C I12A I12B I12C I28A I28B I28C
	Prä	B61B B61C B61D
77.11.22↔		BORP MBOR VAC VAC I VAC II VBOR
	04	E02A E02B E02C E36A E36B
	06	G12A G16A G38A G38B
	08	I02A I02B I02C I12A I12B I12C I28A I28B I28C
	Prä	B61B B61C B61D
77.11.23↔		BORP MBOR VAC VBOR
	04	E02A E02B E02C E36A E36B
	06	G12A G16A G38A G38B
	08	I02A I02B I02C I12A I12B I12C I28A I28B I28C
	Prä	B61B B61C B61D
77.11.99↔	Prä	B61B B61C B61D
	04	E02A E02B E02C
	08	I02A I02B I02C I12A I12B I12C I28A I28B I28C
77.12.10↔		BORP EML MBOR VAC VAC I VAC II VBOR
	04	E36A E36B
	05	F04Z F13A F13B
	06	G12A G16A G38A G38B
	08	I02A I02B I02C I12A I12B I12C I13A I13B I13C I13D I23A I23B
	21B	X06A X06B X06C
	Prä	B61B B61C B61D
77.12.11↔		BORP EML MBOR VAC VAC I VAC II VBOR
	04	E36A E36B
	05	F04Z F13A F13B
	06	G12A G16A G38A G38B
	08	I02A I02B I02C I12A I12B I12C I13A I13B I13C I13D I23A I23B
	21B	X06A X06B X06C
	Prä	B61B B61C B61D
77.12.12↔		BORP EML MBOR VAC VAC I VAC II VBOR
	04	E36A E36B
	05	F04Z F13A F13B
	06	G12A G16A G38A G38B
	08	I02A I02B I02C I12A I12B I12C I13A I13B I13C I13D I23A I23B
	21B	X06A X06B X06C
	Prä	B61B B61C B61D
77.12.13↔		BORP EML MBOR VAC VAC I VAC II VBOR
	04	E36A E36B
	05	F04Z F13A F13B
	06	G12A G16A G38A G38B
	08	I02A I02B I02C I12A I12B I12C I13A I13B I13C I13D I23A I23B
	21B	X06A X06B X06C
	Prä	B61B B61C B61D
77.12.99↔	Prä	B61B B61C B61D
	05	F04Z F13A F13B
	08	I02A I02B I02C I12A I12B I12C I13A I13B I13C I13D I23A I23B
	21B	X06A X06B X06C
77.13.10↔		BORP EML MBOR VAC VAC I VAC II VBOR
	04	E36A E36B
	05	F04Z F13A F13B
	06	G12A G16A G38A G38B
	08	I23A I23B I23C
77.13.11↔		BORP EML MBOR VAC VAC I VAC II VBOR
	04	E36A E36B
	05	F04Z F13A F13B
	06	G12A G16A G38A G38B
	08	I23A I23B I23C
77.13.12↔		BORP EML MBOR VAC VAC I VAC II VBOR
	04	E36A E36B
	05	F04Z F13A F13B
	06	G12A G16A G38A G38B
	08	I23A I23B I23C
77.13.13↔		BORP EML MBOR VAC VAC I VAC II VBOR
	04	E36A E36B
	05	F04Z F13A F13B
	06	G12A G16A G38A G38B
	08	I23A I23B I23C
77.13.99↔	05	F04Z F13A F13B
	08	I23A I23B I23C
77.14.10↔		BORP EML MBOR VAC VAC I VAC II VBOR
	04	E36A E36B
	05	F04Z F13A F13B
	06	G12A G16A G38A

CHOP	MDC	DRG
		G38B
	08	I02A I02B I02C I32A I32B I32C I32D I32E I32F
	21B	X05Z
77.14.11↔		BORP EML MBOR VAC VAC I VAC II VBOR
	04	E36A E36B
	05	F04Z F13A F13B
	06	G12A G16A G38A G38B
	08	I02A I02B I02C I32A I32B I32C I32D I32E I32F
	21B	X05Z
77.14.12↔		BORP EML MBOR VAC VAC I VAC II VBOR
	04	E36A E36B
	05	F04Z F13A F13B
	06	G12A G16A G38A G38B
	08	I02A I02B I02C I32A I32B I32C I32D I32E I32F
	21B	X05Z
77.14.13↔		BORP EML MBOR VAC VAC I VAC II VBOR
	04	E36A E36B
	05	F04Z F13A F13B
	06	G12A G16A G38A G38B
	08	I02A I02B I02C I32A I32B I32C I32D I32E I32F
	21B	X05Z
77.14.99↔	05	F04Z F13A F13B
	08	I02A I02B I02C I32A I32B I32C I32D I32E I32F
	21B	X05Z
77.15.10↔		BORP EML MBOR VAC VAC I VAC II VBOR
	04	E36A E36B
	05	F04Z F13A F13B
	06	G12A G16A G38A G38B
	08	I21A I21B
	21B	X04Z
77.15.11↔		BORP EML MBOR VAC VAC I VAC II VBOR
	04	E36A E36B
	05	F04Z F13A F13B
	06	G12A G16A G38A G38B
	08	I21A I21B
	21B	X04Z
77.15.12↔		BORP EML MBOR VAC VAC I VAC II VBOR
	04	E36A E36B
	05	F04Z F13A F13B
	06	G12A G16A G38A G38B
	08	I21A I21B
	21B	X04Z
77.15.13↔		BORP EML MBOR VAC VAC I VAC II VBOR
	04	E36A E36B
	05	F04Z F13A F13B
	06	G12A G16A G38A G38B
	08	I21A I21B
	21B	X04Z
77.15.20↔		BORP EML MBOR VAC VAC I VAC II VBOR
	04	E36A E36B
	05	F04Z F13A F13B
	06	G12A G16A G38A G38B
	08	I21A I21B
	21B	X04Z
77.15.99↔	05	F04Z F13A F13B
	08	I21A I21B
	21B	X04Z
77.16.10↔		BORP EML MBOR VAC VAC I VAC II VBOR
	01	B03A B03B B03C
	04	E36A E36B
	05	F04Z F13A F13B
	06	G12A G16A G38A G38B
	08	I02A I02B I02C I12A I12B I12C I18A I18B I18C I23A I23B I30A I30B I30C
	21B	X04Z X06A X06B X06C
	Prä	B61B B61C B61D
77.16.11↔		BORP EML MBOR VAC VAC I VAC II VBOR
	01	B03A B03B B03C
	04	E36A E36B
	05	F04Z F13A F13B
	06	G12A G16A G38A G38B
	08	I02A I02B I02C I12A I12B I12C I18A I18B I18C I23A I23B I30A I30B I30C
	21B	X04Z X06A X06B X06C
	Prä	B61B B61C B61D
77.16.12↔		BORP EML MBOR VAC VAC I VAC II VBOR
	01	B03A B03B B03C
	04	E36A E36B
	05	F04Z F13A F13B
	06	G12A G16A G38A G38B
	08	I02A I02B I02C I12A I12B I12C I18A I18B I18C I23A I23B I30A I30B I30C
	21B	X04Z X06A X06B X06C
	Prä	B61B B61C B61D
77.16.13↔		BORP EML MBOR VAC VAC I VAC II VBOR
	01	B03A B03B B03C
	04	E36A E36B
	05	F04Z F13A F13B
	06	G12A G16A G38A G38B
	08	I02A I02B I02C I12A I12B I12C I18A I18B I18C I23A I23B I30A I30B I30C
	21B	X04Z X06A X06B X06C
	Prä	B61B B61C B61D
77.16.99↔	Prä	B61B B61C B61D
	01	B03A B03B B03C
	05	F04Z F13A F13B
	08	I02A I02B I02C I12A I12B I12C I23A I23B
	21B	X04Z X06A X06B X06C
77.17.10↔		BORP EML MBOR VAC VAC I VAC II VBOR
	04	E36A E36B
	05	F04Z F13A F13B
	06	G12A G16A G38A G38B
	08	I23A I23B I23C
	21B	X04Z
77.17.11↔		BORP EML MBOR VAC VAC I VAC II VBOR
	04	E36A E36B
	05	F04Z F13A F13B
	06	G12A G16A G38A G38B
	08	I23A I23B I23C
	21B	X04Z
77.17.12↔		BORP EML MBOR VAC VAC I VAC II VBOR
	04	E36A E36B
	05	F04Z F13A F13B
	06	G12A G16A G38A G38B
	08	I23A I23B I23C
	21B	X04Z
77.17.13↔		BORP EML MBOR VAC VAC I VAC II VBOR
	04	E36A E36B
	05	F04Z F13A F13B
	06	G12A G16A G38A G38B
	08	I23A I23B I23C
	21B	X04Z
77.17.99↔	05	F04Z F13A F13B
	08	I23A I23B I23C
	21B	X04Z
77.18.11↔		BORP EML MBOR VAC VAC I VAC II VBOR
	04	E36A E36B
	05	F04Z F13A F13B
	06	G12A G16A G38A G38B
	08	I20A I20B I20C

PROC

PROC

CHOP	MDC	DRG
		I20D I20E I20F I20G
	21B	X04Z
77.18.12↔		BORP EML MBOR VAC VAC I VAC II VBOR
	04	E36A E36B
	05	F04Z F13A F13B
	06	G12A G16A G38A G38B
	08	I20A I20B I20C I20D I20E I20F I20G
	21B	X04Z
77.18.13↔		BORP EML MBOR VAC VAC I VAC II VBOR
	04	E36A E36B
	05	F04Z F13A F13B
	06	G12A G16A G38A G38B
	08	I20A I20B I20C I20D I20E I20F I20G
	21B	X04Z
77.18.14↔		BORP EML MBOR VAC VAC I VAC II VBOR
	04	E36A E36B
	05	F04Z F13A F13B
	06	G12A G16A G38A G38B
	08	I20A I20B I20C I20D I20E I20F I20G
	21B	X04Z
77.18.19↔	05	F04Z F13A F13B
	08	I20A I20B I20C I20D I20E I20F I20G
	21B	X04Z
77.18.21↔		BORP EML MBOR VAC VAC I VAC II VBOR
	04	E36A E36B
	05	F04Z F13A F13B
	06	G12A G16A G38A G38B
	08	I20A I20B I20C I20D I20E I20F I20G
	21B	X04Z
77.18.22↔		BORP EML MBOR VAC VAC I VAC II VBOR
	04	E36A E36B
	05	F04Z F13A F13B
	06	G12A G16A G38A G38B
	08	I20A I20B I20C I20D I20E I20F I20G
	21B	X04Z
77.18.23↔		BORP EML MBOR VAC VAC I VAC II VBOR
	04	E36A E36B
	05	F04Z F13A F13B
	06	G12A G16A G38A G38B
	08	I20A I20B I20C I20D I20E I20F I20G
	21B	X04Z
77.18.24↔		BORP EML MBOR VAC VAC I VAC II VBOR
	04	E36A E36B
	05	F04Z F13A F13B
	06	G12A G16A G38A G38B
	08	I20A I20B I20C I20D I20E I20F I20G
	21B	X04Z
77.18.29↔	05	F04Z F13A F13B
	08	I20A I20B I20C I20D I20E I20F I20G
	21B	X04Z
77.18.31↔		BORP EML MBOR VAC VAC I VAC II VBOR
	04	E36A E36B
	05	F04Z F13A F13B
	06	G12A G16A G38A G38B
	08	I20A I20B I20C I20D I20E I20F I20G
	21B	X04Z
77.18.32↔		BORP EML MBOR VAC VAC I VAC II VBOR
	04	E36A E36B
	05	F04Z F13A F13B
	06	G12A G16A G38A G38B
	08	I20A I20B I20C I20D I20E I20F I20G
	21B	X04Z
77.18.33↔		BORP EML MBOR VAC VAC I VAC II VBOR
	04	E36A E36B
	05	F04Z F13A F13B
	06	G12A G16A G38A G38B
	08	I20A I20B I20C I20D I20E I20F I20G
	21B	X04Z
77.18.34↔		BORP EML MBOR VAC VAC I VAC II VBOR
	04	E36A E36B
	05	F04Z F13A F13B
	06	G12A G16A G38A G38B
	08	I20A I20B I20C I20D I20E I20F I20G
	21B	X04Z
77.18.39↔	05	F04Z F13A F13B
	08	I20A I20B I20C I20D I20E I20F I20G
	21B	X04Z
77.18.41↔		BORP EML MBOR VAC VAC I VAC II VBOR
	04	E36A E36B
	05	F04Z F13A F13B
	06	G12A G16A G38A G38B
	08	I20A I20B I20C I20D I20E I20F I20G
	21B	X04Z
77.18.42↔		BORP EML MBOR VAC VAC I VAC II VBOR
	04	E36A E36B
	05	F04Z F13A F13B
	06	G12A G16A G38A G38B
	08	I20A I20B I20C I20D I20E I20F I20G
	21B	X04Z
77.18.43↔		BORP EML MBOR VAC VAC I VAC II VBOR
	04	E36A E36B
	05	F04Z F13A F13B
	06	G12A G16A G38A G38B
	08	I20A I20B I20C I20D I20E I20F I20G
	21B	X04Z
77.18.44↔		BORP EML MBOR VAC VAC I VAC II VBOR
	04	E36A E36B
	05	F04Z F13A F13B
	06	G12A G16A G38A G38B
	08	I20A I20B I20C I20D I20E I20F I20G
	21B	X04Z
77.18.49↔	05	F04Z F13A F13B
	08	I20A I20B I20C I20D I20E I20F I20G
	21B	X04Z
77.18.99↔	05	F04Z F13A F13B
	08	I20A I20B I20C I20D I20E I20F I20G
	21B	X04Z
77.19.10↔		BORP EML MBOR VAC VAC I VAC II VBOR
	04	E36A E36B
	05	F04Z F13A F13B
	06	G12A G16A G38A G38B
	08	I23A I23B I23C
	21B	X04Z X05Z X06A X06B X06C
77.19.11↔		BORP EML MBOR VAC VAC I VAC II VBOR
	04	E36A E36B
	05	F04Z F13A F13B
	06	G12A G16A G38A G38B

CHOP	MDC	DRG
	08	I23A I23B I23C
	13	N11A N11B
	21B	X04Z X05Z X06A X06B X06C
77.19.12↔		BORP EML MBOR VAC VAC I VAC II VBOR
	04	E36A E36B
	05	F04Z F13A F13B
	06	G12A G16A G38A G38B
	08	I23A I23B I23C
	13	N11A N11B
	21B	X04Z X05Z X06A X06B X06C
77.19.13↔		BORP EML MBOR VAC VAC I VAC II VBOR
	04	E36A E36B
	05	F04Z F13A F13B
	06	G12A G16A G38A G38B
	08	I23A I23B I23C
	13	N11A N11B
	21B	X04Z X05Z X06A X06B X06C
77.19.19↔		BORP EML MBOR VAC VBOR
	04	E36A E36B
	05	F04Z F13A F13B
	06	G12A G16A G38A G38B
	08	I23A I23B I23C
	13	N11A N11B
	21B	X04Z X05Z X06A X06B X06C
77.19.30↔		BORP EML MBOR VAC VAC I VAC II VBOR
	04	E36A E36B
	05	F04Z F13A F13B
	06	G12A G16A G38A G38B
	08	I23A I23B I23C
	13	N11A N11B
	21B	X04Z X05Z X06A X06B X06C
77.19.31↔		BORP EML MBOR VAC VAC I VAC II VBOR
	04	E36A E36B
	05	F04Z F13A F13B
	06	G12A G16A G38A G38B
	08	I23A I23B I23C
	13	N11A N11B
	21B	X04Z X05Z X06A X06B X06C
77.19.32↔		BORP EML MBOR VAC VAC I VAC II VBOR
	04	E36A E36B
	05	F04Z F13A F13B
	06	G12A G16A G38A G38B
	08	I23A I23B I23C
	13	N11A N11B
	21B	X04Z X05Z X06A X06B X06C
77.19.33↔		BORP EML MBOR VAC VAC I VAC II VBOR
	04	E36A E36B
	05	F04Z F13A F13B
	06	G12A G16A G38A G38B
	08	I23A I23B I23C
	13	N11A N11B
	21B	X04Z X05Z X06A X06B X06C
77.19.39↔		BORP EML MBOR VAC VBOR
	04	E36A E36B
	05	F04Z F13A F13B
	06	G12A G16A G38A G38B
	08	I23A I23B I23C
	13	N11A N11B
	21B	X04Z X05Z X06A X06B X06C
77.19.40↔		BORP EML MBOR VAC VAC I VAC II VBOR
	04	E36A E36B
	05	F04Z F13A F13B
	06	G12A G16A G38A G38B
	08	I23A I23B I23C
	13	N11A N11B
	21B	X04Z X05Z X06A X06B X06C
77.19.41↔		BORP EML MBOR VAC VAC I VAC II VBOR
	04	E36A E36B
	05	F04Z F13A F13B
	06	G12A G16A G38A G38B
	08	I23A I23B I23C
	13	N11A N11B
	21B	X04Z X05Z X06A X06B X06C
77.19.42↔		BORP EML MBOR VAC VAC I VAC II VBOR
	04	E36A E36B
	05	F04Z F13A F13B
	06	G12A G16A G38A G38B
	08	I23A I23B I23C
	13	N11A N11B
	21B	X04Z X05Z X06A X06B X06C
77.19.43↔		BORP EML MBOR VAC VAC I VAC II VBOR
	04	E36A E36B
	05	F04Z F13A F13B
	06	G12A G16A G38A G38B
	08	I23A I23B I23C
	13	N11A N11B
	21B	X04Z X05Z X06A X06B X06C
77.19.49↔		BORP EML MBOR VAC VBOR
	04	E36A E36B
	05	F04Z F13A F13B
	06	G12A G16A G38A G38B
	08	I23A I23B I23C
	13	N11A N11B
	21B	X04Z X05Z X06A X06B X06C
77.19.90↔		BORP MBOR VAC VAC I VAC II VBOR
	04	E36A E36B
	05	F04Z F13A F13B
	06	G12A G16A G38A G38B
	08	I23A I23B I23C
	13	N11A N11B
	21B	X04Z X05Z X06A X06B X06C
77.19.91↔		BORP MBOR VAC VAC I VAC II VBOR
	04	E36A E36B
	05	F04Z F13A F13B
	06	G12A G16A G38A G38B
	08	I23A I23B I23C
	13	N11A N11B
	21B	X04Z X05Z X06A X06B X06C
77.19.92↔		BORP MBOR VAC VAC I VAC II VBOR
	04	E36A E36B
	05	F04Z F13A F13B
	06	G12A G16A G38A G38B
	08	I23A I23B I23C
	13	N11A N11B
	21B	X04Z X05Z X06A X06B X06C
77.19.93↔		BORP MBOR VAC VAC I VAC II VBOR
	04	E36A E36B
	05	F04Z F13A F13B
	06	G12A G16A G38A G38B
	08	I23A I23B I23C
	13	N11A N11B
	21B	X04Z X05Z X06A X06B X06C
77.19.99↔	05	F04Z F13A F13B
	08	I23A I23B I23C
	13	N11A N11B
	21B	X04Z X05Z X06A X06B X06C
77.21.10↔		BORP MBOR VAC VAC I VAC II VBOR
	04	E02A E02B E02C E36A E36B
	06	G12A G16A G38A G38B
	08	I29A I29B I29C
	21B	X06A X06B X06C
77.21.11↔		BORP MBOR VAC VAC I VAC II VBOR
	04	E02A E02B E02C E36A E36B
	06	G12A G16A G38A G38B
	08	I29A I29B I29C
	21B	X06A X06B X06C
77.21.20↔		BORP MBOR VAC VAC I VAC II VBOR
	04	E02A E02B E02C E36A E36B
	06	G12A G16A G38A

PROC

PROC

CHOP	MDC	DRG
		G38B
	08	I29A I29B I29C
	21B	X06A X06B X06C
77.21.21↔		BORP MBOR VAC VAC I VAC II VBOR
	04	E02A E02B E02C E36A E36B
	06	G12A G16A G38A G38B
	08	I29A I29B I29C
	21B	X06A X06B X06C
77.22↔		BORP EML MBOR VAC VAC I VAC II VBOR
	04	E36A E36B
	06	G12A G16A G38A G38B
	08	I08B I11Z I13A I13B I13C I13D
	21B	X06A X06B X06C
77.23↔		BORP EML MBOR VAC VAC I VAC II VBOR
	04	E36A E36B
	06	G12A G16A G38A G38B
	08	I08B I11Z I13A I31A I31B
	21B	X06A X06B X06C
77.24↔		BORP EML MBOR VAC VAC I VAC II VBOR
	04	E36A E36B
	06	G12A G16A G38A G38B
	08	I02A I02B I02C I08B I11Z I13A I32A I32B I32C I32D I32E I32F
	21B	X05Z
77.25.00↔		BORP EML MBOR VAC VAC I VAC II VBOR
	01	B03A B03B B03C
	04	E36A E36B
	06	G12A G16A G38A G38B
	08	I02A I02B I02C I08A I08B I08C I11Z I13A
	21B	X04Z
77.25.10↔		BORP EML MBOR VAC VAC I VAC II VBOR
	01	B03A B03B B03C
	04	E36A E36B
	06	G12A G16A G38A G38B
	08	I02A I02B I02C I08A I08B I08C I11Z I13A
	21B	X04Z
77.25.20↔		BORP EML MBOR VAC VAC I VAC II VBOR
	01	B03A B03B B03C
	04	E36A E36B
	06	G12A G16A G38A G38B
	08	I02A I02B I02C I08A I08B I08C I11Z I13A
	21B	X04Z
77.25.99↔		BORP EML MBOR VAC VAC I VAC II VBOR
	01	B03A B03B B03C
	04	E36A E36B
	06	G12A G16A G38A G38B
	08	I02A I02B I02C I08A I08B I08C I11Z I13A
	21B	X04Z
77.27.00↔		BORP EML MBOR VAC VAC I VAC II VBOR
	01	B03A B03B B03C
	04	E36A E36B
	05	F04Z F13A F13B F13C
	06	G12A G16A G38A G38B
	08	I08B I11Z I13A I13B I13C I13D
	10	K09A K09B
	21B	X04Z
77.27.10↔		BORP EML MBOR VAC VAC I VAC II VBOR
	01	B03A B03B B03C
	04	E36A E36B
	05	F04Z F13A F13B F13C
	06	G12A G16A G38A G38B
	08	I08B I11Z I13A I13B I13C I13D
	10	K09A K09B
	21B	X04Z
77.27.20↔		BORP EML MBOR VAC VAC I VAC II VBOR
	01	B03A B03B B03C
	04	E36A E36B
	05	F04Z F13A F13B F13C
	06	G12A G16A G38A G38B
	08	I08B I11Z I13A I13B I13C I13D
	10	K09A K09B
	21B	X04Z
77.27.99↔		BORP EML MBOR VAC VAC I VAC II VBOR
	01	B03A B03B B03C
	04	E36A E36B
	05	F04Z F13A F13B F13C
	06	G12A G16A G38A G38B
	08	I08B I11Z I13A I13B I13C I13D
	10	K09A K09B
	21B	X04Z
77.28.10↔		BORP EML MBOR VAC VAC I VAC II VBOR
	04	E36A E36B
	05	F04Z F13A F13B F13C
	06	G12A G16A G38A G38B
	08	I08B I11Z I13A I20A I20B I20C I20D I20G
	21B	X04Z
77.28.20↔		BORP EML MBOR VAC VAC I VAC II VBOR
	04	E36A E36B
	05	F04Z F13A F13B F13C
	06	G12A G16A G38A G38B
	08	I08B I11Z I13A I20A I20B I20C I20D I20G
	21B	X04Z
77.28.30↔		BORP EML MBOR VAC VAC I VAC II VBOR
	04	E36A E36B
	05	F04Z F13A F13B F13C
	06	G12A G16A G38A G38B
	08	I08B I11Z I13A I20A I20B I20C I20D I20G
	21B	X04Z
77.28.40↔		BORP EML MBOR VAC VAC I VAC II VBOR
	04	E36A E36B
	05	F04Z F13A F13B F13C
	06	G12A G16A G38A G38B
	08	I08B I11Z I13A I20A I20B I20C I20D I20G
	21B	X04Z
77.28.99↔		BORP EML MBOR VAC VAC I VAC II VBOR
	04	E36A E36B
	05	F04Z F13A F13B F13C
	06	G12A G16A G38A G38B
	08	I08B I11Z I13A I20A I20B I20C I20D I20G
	21B	X04Z
77.29.00↔	01	B03A B03B B03C
	08	I28A I28B I28C
	21B	X06A X06B X06C
77.29.10↔		BORP EML MBOR VAC VAC I VAC II VBOR
	01	B03A B03B B03C
	04	E36A E36B
	06	G12A G16A G38A G38B
	08	I02A I02B I02C I08A I08B I11Z I13A I32A I32B I32C I32D I32E

CHOP	MDC	DRG
		I32F
	21B	X05Z
77.29.30↔		BORP EML MBOR VAC VAC I VAC II VBOR
	04	E36A E36B
	06	G12A G16A G38A G38B
	21B	X06A X06B X06C
77.29.40↔		BORP EML MBOR VAC VAC I VAC II VBOR
	01	B03A B03B B03C
	04	E36A E36B
	05	F04Z F13A F13B F13C
	06	G12A G16A G38A G38B
	08	I02A I02B I02C I08A I08B I11Z I13A I20A I20B I20C I20D I20E I20F I20G
	21B	X04Z
77.29.99↔	01	B03A B03B B03C
	21B	X06A X06B X06C
77.31.10↔		BORP EML MBOR VAC VAC I VAC II VBOR
	04	E02A E02B E02C E36A E36B
	06	G12A G16A G38A G38B
	08	I08B I11Z I13A I28A I28B
	21B	X06A X06B X06C
77.31.11↔		BORP EML MBOR VAC VAC I VAC II VBOR
	04	E02A E02B E02C E36A E36B
	06	G12A G16A G38A G38B
	08	I08B I11Z I13A I28A I28B
	21B	X06A X06B X06C
77.31.12↔		BORP EML MBOR VAC VAC I VAC II VBOR
	04	E02A E02B E02C E36A E36B
	06	G12A G16A G38A G38B
	08	I08B I11Z I13A I28A I28B
	21B	X06A X06B X06C
77.31.13↔		BORP EML MBOR VAC VAC I VAC II VBOR
	04	E02A E02B E02C E36A E36B
	06	G12A G16A G38A G38B
	08	I08B I11Z I13A I28A I28B
	21B	X06A X06B X06C
77.31.20↔		BORP MBOR VAC VAC I VAC II VBOR
	04	E36A E36B
	06	G12A G16A G38A G38B
	08	I28A I28B I28C
77.31.21↔		BORP MBOR VAC VAC I VAC II VBOR
	04	E36A E36B
	06	G12A G16A G38A G38B
	08	I28A I28B I28C
77.32.00↔	08	I13A I13B I13C I13D
	21B	X06A X06B X06C
77.32.10↔		BORP EML MBOR VAC VAC I VAC II VBOR
	04	E36A E36B
	06	G12A G16A G38A G38B
	08	I08B I11Z I13A I13B I13C I13D
	21B	X06A X06B X06C
77.32.11↔	08	I13A I13B
	21B	X06A X06B X06C
77.32.99↔	08	I13A I13B I13C I13D
	21B	X06A X06B X06C
77.33.00↔		BORP EML MBOR VAC VBOR
	04	E36A E36B
	06	G12A G16A G38A G38B
	08	I08B I11Z I13A I31A I31B
	21B	X06A X06B X06C
77.33.10↔		BORP EML MBOR VAC VAC I VAC II VBOR
	04	E36A E36B
	06	G12A G16A G38A G38B
	08	I08B I11Z I13A I31A I31B
	21B	X06A X06B X06C
77.33.11↔		BORP EML MBOR VAC VAC I VAC II VBOR
	04	E36A E36B
	06	G12A G16A G38A G38B
	08	I08B I11Z I13A I31A
	21B	X06A X06B X06C
77.33.20↔		BORP EML MBOR VAC VAC I VAC II VBOR
	04	E36A E36B
	06	G12A G16A G38A G38B
	08	I08B I11Z I13A I31A I31B
	21B	X06A X06B X06C
77.33.99↔		BORP EML MBOR VAC VAC I VAC II VBOR
	04	E36A E36B
	06	G12A G16A G38A G38B
	08	I08B I11Z I13A I31A I31B
	21B	X06A X06B X06C
77.34.10↔		BORP EML MBOR VAC VAC I VAC II VBOR
	04	E36A E36B
	06	G12A G16A G38A G38B
	08	I02A I02B I02C I08B I11Z I13A I32A I32B I32C I32D I32E I32F
	21B	X05Z
77.34.11↔		BORP EML MBOR VAC VAC I VAC II VBOR
	04	E36A E36B
	06	G12A G16A G38A G38B
	08	I02A I02B I02C I08B I11Z I13A I32A I32B I32C I32E I32F
	21B	X05Z
77.34.99↔		BORP EML MBOR VAC VAC I VAC II VBOR
	04	E36A E36B
	06	G12A G16A G38A G38B
	08	I02A I02B I02C I08B I11Z I13A I32A I32B I32C I32D I32E I32F
	21B	X05Z
77.35.00↔		BORP EML MBOR VAC VAC I VAC II VBOR
	01	B03A B03B B03C
	04	E36A E36B
	06	G12A G16A G38A G38B
	08	I02A I02B I02C I08A I08B I08C I11Z I13A
	21B	X04Z
77.35.10↔		BORP EML MBOR VAC VAC I VAC II VBOR
	01	B03A B03B B03C
	04	E36A E36B
	06	G12A G16A G38A G38B
	08	I02A I02B I02C I08A I08B I08C I11Z I13A
	21B	X04Z
77.35.11↔		BORP EML MBOR VAC VAC I VAC II VBOR
	01	B03A B03B B03C
	04	E36A E36B
	06	G12A G16A G38A G38B
	08	I02A I02B I02C I08A I08B I11Z I13A
	21B	X04Z
77.35.12↔		BORP EML MBOR VAC VAC I VAC II VBOR
	01	B03A B03B B03C
	04	E36A E36B

PROC

PROC

CHOP	MDC	DRG
	06	G12A G16A G38A G38B
	08	I02A I02B I02C I08A I08B I08C I11Z I13A
	21B	X04Z
77.35.19↔		BORP EML MBOR VAC VAC I VAC II VBOR
	01	B03A B03B B03C
	04	E36A E36B
	06	G12A G16A G38A G38B
	08	I02A I02B I02C I08A I08B I08C I11Z I13A
	21B	X04Z
77.35.20↔		BORP EML MBOR VAC VAC I VAC II VBOR
	01	B03A B03B B03C
	04	E36A E36B
	06	G12A G16A G38A G38B
	08	I02A I02B I02C I08A I08B I08C I11Z I13A
	21B	X04Z
77.35.21↔		BORP EML MBOR VAC VAC I VAC II VBOR
	01	B03A B03B B03C
	04	E36A E36B
	06	G12A G16A G38A G38B
	08	I02A I02B I02C I08A I08B I11Z I13A
	21B	X04Z
77.35.22↔		BORP EML MBOR VAC VAC I VAC II VBOR
	01	B03A B03B B03C
	04	E36A E36B
	06	G12A G16A G38A G38B
	08	I02A I02B I02C I08A I08B I08C I11Z I13A
	21B	X04Z
77.35.24↔		BORP EML MBOR VAC VAC I VAC II VBOR
	01	B03A B03B B03C
	04	E36A E36B
	06	G12A G16A G38A G38B
	08	I02A I02B I02C I08A I08B I08C I11Z I13A
	21B	X04Z
77.35.99↔		BORP EML MBOR VAC VAC I VAC II VBOR
	01	B03A B03B B03C
	04	E36A E36B
	06	G12A G16A G38A G38B
	08	I02A I02B I02C I08A I08B I08C I11Z I13A
	21B	X04Z
77.37.00↔		BORP EML MBOR VAC VAC I VAC II VBOR
	01	B03A B03B B03C
	04	E36A E36B
	05	F04Z F13A F13B F13C
	06	G12A G16A G38A G38B
	08	I08B I11Z I13A I13B I13C I13D
	10	K09A K09B
	21B	X04Z
77.37.10↔		BORP EML MBOR VAC VAC I VAC II VBOR
	01	B03A B03B B03C
	04	E36A E36B
	05	F04Z F13A F13B F13C
	06	G12A G16A G38A G38B
	08	I08B I11Z I13A I13B I13C I13D
	10	K09A K09B
	21B	X04Z
77.37.12↔		BORP EML MBOR VAC VAC I VAC II VBOR
	01	B03A B03B B03C
	04	E36A E36B
	05	F04Z F13A F13B F13C
	06	G12A G16A G38A G38B
	08	I08B I11Z I13A I13B I13C I13D
	10	K09A K09B
	21B	X04Z
77.37.13↔		BORP EML MBOR VAC VAC I VAC II VBOR
	01	B03A B03B B03C
	04	E36A E36B
	05	F04Z F13A F13B F13C
	06	G12A G16A G38A G38B
	08	I08B I11Z I13A I13B
	10	K09A K09B
	21B	X04Z
77.37.14↔		BORP EML MBOR VAC VAC I VAC II VBOR
	01	B03A B03B B03C
	04	E36A E36B
	05	F04Z F13A F13B F13C
	06	G12A G16A G38A G38B
	08	I08B I11Z I13A I13B I13C I13D
	10	K09A K09B
	21B	X04Z
77.37.19↔		BORP EML MBOR VAC VAC I VAC II VBOR
	01	B03A B03B B03C
	04	E36A E36B
	05	F04Z F13A F13B F13C
	06	G12A G16A G38A G38B
	08	I08B I11Z I13A I13B I13C I13D
	10	K09A K09B
	21B	X04Z
77.37.20↔		BORP EML MBOR VAC VAC I VAC II VBOR
	01	B03A B03B B03C
	04	E36A E36B
	05	F04Z F13A F13B F13C
	06	G12A G16A G38A G38B
	08	I08B I11Z I13A I13B I13C I13D
	10	K09A K09B
	21B	X04Z
77.37.21↔		BORP EML MBOR VAC VAC I VAC II VBOR
	01	B03A B03B B03C
	04	E36A E36B
	05	F04Z F13A F13B F13C
	06	G12A G16A G38A G38B
	08	I08B I11Z I13A I13B I13C I13D
	10	K09A K09B
	21B	X04Z
77.37.22↔		BORP EML MBOR VAC VAC I VAC II VBOR
	01	B03A B03B B03C
	04	E36A E36B
	05	F04Z F13A F13B F13C
	06	G12A G16A G38A G38B
	08	I08B I11Z I13A I13B
	10	K09A K09B
	21B	X04Z
77.37.29↔		BORP EML MBOR VAC VAC I VAC II VBOR
	01	B03A B03B B03C
	04	E36A E36B
	05	F04Z F13A F13B F13C
	06	G12A G16A G38A G38B
	08	I08B I11Z I13A I13B I13C I13D
	10	K09A K09B
	21B	X04Z
77.37.99↔		BORP EML MBOR VAC VAC I VAC II VBOR
	01	B03A B03B B03C
	04	E36A E36B
	05	F04Z F13A F13B F13C
	06	G12A G16A G38A

CHOP	MDC	DRG
		G38B
	08	I08B I11Z I13A I13B I13C I13D
	10	K09A K09B
	21B	X04Z
77.38.10↔		BORP EML MBOR VAC VAC I VAC II VBOR
	04	E36A E36B
	05	F04Z F13A F13B F13C
	06	G12A G16A G38A G38B
	08	I08B I11Z I13A I20A I20B I20C I20D I20G
	21B	X04Z
77.38.11↔		BORP EML MBOR VAC VAC I VAC II VBOR
	04	E36A E36B
	05	F04Z F13A F13B F13C
	06	G12A G16A G38A G38B
	08	I08B I11Z I13A I20A I20B I20C I20D I20G
	21B	X04Z
77.38.12↔		BORP EML MBOR VAC VAC I VAC II VBOR
	04	E36A E36B
	05	F04Z F13A F13B F13C
	06	G12A G16A G38A G38B
	08	I08B I11Z I13A I20A I20B I20C I20D I20G
	21B	X04Z
77.38.13↔		BORP EML MBOR VAC VAC I VAC II VBOR
	04	E36A E36B
	05	F04Z F13A F13B F13C
	06	G12A G16A G38A G38B
	08	I08B I11Z I13A I20A I20B I20C I20D I20G
	21B	X04Z
77.38.19↔		BORP EML MBOR VAC VBOR
	04	E36A E36B
	05	F04Z F13A F13B F13C
	06	G12A G16A G38A G38B
	08	I08B I11Z I13A I20A I20B I20C I20D I20G
	21B	X04Z
77.38.29↔		BORP EML MBOR VAC VBOR
	04	E36A E36B
	05	F04Z F13A F13B F13C
	06	G12A G16A G38A

CHOP	MDC	DRG
		G38B
	08	I08B I11Z I13A I20A I20B I20C I20D I20G
	21B	X04Z
77.38.99↔		BORP EML MBOR VAC VBOR
	04	E36A E36B
	05	F04Z F13A F13B F13C
	06	G12A G16A G38A G38B
	08	I08B I11Z I13A I20A I20B I20C I20D I20G
	21B	X04Z
77.39.10↔		BORP MBOR VAC VBOR
	01	B03A B03B B03C
	04	E36A E36B
	06	G12A G16A G38A G38B
	08	I02A I02B I02C I08B I11Z I13A I32A I32B I32C I32D I32E I32F
	21B	X05Z
77.39.19↔		BORP MBOR VAC VBOR
	01	B03A B03B B03C
	04	E36A E36B
	06	G12A G16A G38A G38B
	08	I02A I02B I02C I32A I32B I32C I32D I32E I32F
	21B	X05Z
77.39.30↔		BORP EML MBOR VAC VAC I VAC II VBOR
	04	E36A E36B
	06	G12A G16A G38A G38B
	08	I02A I02B I02C I08A I08B I08C
	21B	X06A X06B X06C
77.39.31↔		BORP EML MBOR VAC VAC I VAC II VBOR
	04	E36A E36B
	06	G12A G16A G38A G38B
	08	I02A I02B I02C I08A I08B I08C
	21B	X06A X06B X06C
77.39.32↔		BORP EML MBOR VAC VAC I VAC II VBOR
	04	E36A E36B
	06	G12A G16A G38A G38B
	08	I02A I02B I02C I08A I08B I08C
	21B	X06A X06B X06C
77.39.39↔		BORP EML MBOR VAC VBOR
	04	E36A E36B
	06	G12A G16A G38A G38B
	21B	X06A X06B X06C

CHOP	MDC	DRG
77.39.40↔		BORP MBOR VAC VAC I VAC II VBOR
	01	B03A B03B B03C
	04	E36A E36B
	06	G12A G16A G38A G38B
	08	I08B I11Z I13A I20A I20B I20C I20D I20G
	21B	X04Z
77.39.49↔		BORP MBOR VAC VBOR
	01	B03A B03B B03C
	04	E36A E36B
	06	G12A G16A G38A G38B
	08	I08B I11Z I13A I28A I28B
	21B	X06A X06B X06C
77.40.20↔	01	B17A B17B
	04	E02A E02B
	05	F04Z F13A F13B F13C
	08	I18A I18B I18C
	09	J02A J02B J03A J03B J04Z J11A J11B
	10	K09A K09B
	11	L09A L09B
	12	M06Z M09A M09B M37Z
	16	Q03Z
	21B	X06A X06B X06C
77.40.99‡↔	01	B60A
77.41.10‡↔		AKBB
	01	B60A
	16	Q86A
77.41.20↔	01	B17A B17B
	04	E02A E02B
	05	F04Z F13A F13B F13C
	08	I18A I18B I18C
	09	J02A J02B J03A J03B J04Z J11A J11B
	10	K09A K09B
	11	L09A L09B
	12	M06Z M09A M09B M37Z
	16	Q03Z
	21B	X06A X06B X06C
77.41.99↔	01	B17A B17B
	04	E02A E02B
	05	F04Z F13A F13B F13C
	08	I18A I18B I18C
	09	J02A J02B J03A J03B J04Z J11A J11B
	10	K09A K09B
	11	L09A L09B
	12	M06Z M09A M09B M37Z
	16	Q03Z
	21B	X06A X06B X06C
77.42.10‡↔		AKBB
	01	B60A
	16	Q86A
77.42.20↔	01	B17A B17B
	04	E02A E02B

PROC

PROC

CHOP	MDC	DRG
	05	F04Z F13A F13B F13C
	08	I18A I18B I18C
	09	J02A J02B J03A J03B J04Z J11A J11B
	10	K09A K09B
	11	L09A L09B
	12	M06Z M09A M09B M37Z
	16	Q03Z
	21B	X06A X06B X06C
77.42.99↔	01	B17A B17B
	04	E02A E02B
	05	F04Z F13A F13B F13C
	08	I18A I18B I18C
	09	J02A J02B J03A J03B J04Z J11A J11B
	10	K09A K09B
	11	L09A L09B
	12	M06Z M09A M09B M37Z
	16	Q03Z
	21B	X06A X06B X06C
77.43.10‡↔		AKBB
	01	B60A
	16	Q86A
77.43.20↔	01	B17A B17B
	04	E02A E02B
	05	F04Z F13A F13B F13C
	08	I18A I18B I18C
	09	J02A J02B J03A J03B J04Z J11A J11B
	10	K09A K09B
	11	L09A L09B
	12	M06Z M09A M09B M37Z
	16	Q03Z
	21B	X05Z X06A X06B X06C
77.43.99↔	01	B17A B17B
	04	E02A E02B
	05	F04Z F13A F13B F13C
	08	I18A I18B I18C
	09	J02A J02B J03A J03B J04Z J11A J11B
	10	K09A K09B
	11	L09A L09B
	12	M06Z M09A M09B M37Z
	16	Q03Z
	21B	X05Z X06A X06B X06C
77.44.10‡↔		AKBB
	01	B60A
	16	Q86A
77.44.20↔	01	B17A B17B
	04	E02A E02B
	05	F04Z F13A F13B F13C
	08	I02A I02B I02C I32A I32B I32C I32D I32E I32F
	09	J02A J02B J03A J03B J04Z J11A J11B
	10	K09A K09B
	11	L09A L09B
	12	M06Z M09A M09B M37Z
	16	Q03Z
	21B	X04Z X06A X06B X06C
77.44.99↔	01	B17A B17B
	04	E02A E02B
	05	F04Z F13A F13B F13C
	08	I02A I02B I02C I32A I32B I32C I32D I32E I32F
	09	J02A J02B J03A J03B J04Z J11A J11B
	10	K09A K09B
	11	L09A L09B
	12	M06Z M09A M09B M37Z
	16	Q03Z
	21B	X04Z X06A X06B X06C
77.45.10‡↔		AKBB
	01	B60A
	16	Q86A
77.45.20↔	01	B17A B17B
	04	E02A E02B
	05	F04Z F13A F13B F13C
	08	I18A I18B I18C
	09	J02A J02B J03A J03B J04Z J11A J11B
	10	K09A K09B
	11	L09A L09B
	12	M06Z M09A M09B M37Z
	16	Q03Z
	21B	X04Z X06A X06B X06C
77.45.99↔	01	B17A B17B
	04	E02A E02B
	05	F04Z F13A F13B F13C
	08	I18A I18B I18C
	09	J02A J02B J03A J03B J04Z J11A J11B
	10	K09A K09B
	11	L09A L09B
	12	M06Z M09A M09B M37Z
	16	Q03Z
	21B	X04Z X06A X06B X06C
77.46.10‡↔		AKBB
	01	B60A
	16	Q86A
77.46.20↔	01	B17A B17B
	04	E02A E02B
	05	F04Z F13A F13B F13C
	08	I18A I18B I18C
	09	J02A J02B J03A J03B J04Z J11A J11B
	10	K09A K09B
	11	L09A L09B
	12	M06Z M09A M09B M37Z
	16	Q03Z
	21B	X04Z X06A X06B X06C
77.46.99↔	01	B17A B17B
	04	E02A E02B
	05	F04Z F13A F13B F13C
	08	I18A I18B I18C
	09	J02A J02B J03A J03B J04Z J11A J11B
	10	K09A K09B
	11	L09A L09B
	12	M06Z M09A M09B M37Z
	16	Q03Z
	21B	X04Z X06A X06B X06C
77.47.10‡↔		AKBB
	01	B60A
	16	Q86A
77.47.20↔	01	B17A B17B
	04	E02A E02B
	05	F04Z F13A F13B F13C
	08	I18A I18B I18C
	09	J02A J02B J03A J03B J04Z J11A J11B
	10	K09A K09B
	11	L09A L09B
	12	M06Z M09A M09B M37Z
	16	Q03Z
	21B	X04Z X06A X06B X06C
77.47.99↔	01	B17A B17B
	04	E02A E02B
	05	F04Z F13A F13B F13C
	08	I18A I18B I18C
	09	J02A J02B J03A J03B J04Z J11A J11B
	10	K09A K09B
	11	L09A L09B
	12	M06Z M09A M09B M37Z
	16	Q03Z
	21B	X04Z X06A X06B X06C
77.48.10‡↔		AKBB
	01	B60A
	16	Q86A
77.48.20↔	01	B17A B17B
	04	E02A E02B
	05	F04Z F13A F13B F13C
	08	I20A I20B I20C I20D I20G
	09	J02A J02B J03A J03B J04Z J11A J11B
	10	K09A K09B
	11	L09A L09B
	12	M06Z M09A M09B

CHOP	MDC	DRG
		M37Z
	16	Q03Z
	21B	X04Z X06A X06B X06C
77.48.99↔	01	B17A B17B
	04	E02A E02B
	05	F04Z F13A F13B F13C
	08	I20A I20B I20C I20D I20E I20F I20G
	09	J02A J02B J03A J03B J04Z J11A J11B
	10	K09A K09B
	11	L09A L09B
	12	M06Z M09A M09B M37Z
	16	Q03Z
	21B	X04Z X06A X06B X06C
77.49.40‡↔		AKBB
	01	B60A
	16	Q86A
77.49.41↔	01	B17A B17B
	04	E02A E02B
	05	F04Z F13A F13B F13C
	08	I18A I18B I18C
	09	J02A J02B J03A J03B J04Z J11A J11B
	10	K09A K09B
	11	L09A L09B
	12	M06Z M09A M09B M37Z
	16	Q03Z
	21B	X04Z X06A X06B X06C
77.49.91↔	01	B17A B17B
	04	E02A E02B
	05	F04Z F13A F13B F13C
	08	I18A I18B I18C
	09	J02A J02B J03A J03B J04Z J11A J11B
	10	K09A K09B
	11	L09A L09B
	12	M06Z M09A M09B M37Z
	16	Q03Z
	21B	X04Z X06A X06B X06C
77.49.99↔	01	B17A B17B
	04	E02A E02B
	05	F04Z F13A F13B F13C
	08	I18A I18B I18C
	09	J02A J02B J03A J03B J04Z J11A J11B
	10	K09A K09B
	11	L09A L09B
	12	M06Z M09A M09B M37Z
	16	Q03Z
	21B	X04Z X06A X06B X06C
77.51↔		BORP EML MBOR VAC VAC I VAC II VBOR
	04	E36A E36B
	05	F04Z F13A F13B F13C
	06	G12A G16A G38A G38B
	08	I20A I20B I20C I20D I20E I20F I20G
	21B	X04Z
77.52↔		BORP EML MBOR VAC VAC I VAC II VBOR
	04	E36A E36B
	05	F04Z F13A F13B F13C
	06	G12A G16A G38A G38B
	08	I20A I20B I20C I20D I20E I20F I20G
	21B	X04Z
77.53↔		BORP EML MBOR VAC VAC I VAC II VBOR
	04	E36A E36B
	05	F04Z F13A F13B F13C
	06	G12A G16A G38A G38B
	08	I20A I20B I20C I20D I20E I20F I20G
	21B	X04Z
77.54↔		BORP EML MBOR VAC VAC I VAC II VBOR
	04	E36A E36B
	05	F04Z F13A F13B F13C
	06	G12A G16A G38A G38B
	08	I20A I20B I20C I20D I20E I20F I20G
	21B	X04Z
77.56↔		BORP EML MBOR VAC VAC I VAC II VBOR
	04	E36A E36B
	06	G12A G16A G38A G38B
	08	I20A I20B I20C I20D I20E I20F I20G
77.57↔		BORP EML MBOR VAC VAC I VAC II VBOR
	04	E36A E36B
	06	G12A G16A G38A G38B
	08	I20A I20B I20C I20D I20E I20F I20G
77.58↔		BORP EML MBOR VAC VAC I VAC II VBOR
	04	E36A E36B
	05	F04Z F13A F13B F13C
	06	G12A G16A G38A G38B
	08	I20A I20B I20C I20D I20E I20F I20G
	21B	X04Z
77.5A↔		BORP EML MBOR VAC VAC I VAC II VBOR
	04	E36A E36B
	05	F04Z F13A F13B F13C
	06	G12A G16A G38A G38B
	08	I20A I20B I20C I20D I20E I20F I20G
	21B	X04Z
77.61.10↔		BORP MBOR VAC VBOR
	01	B03A B03B B03C
	04	E02A E02B E02C E36A E36B
	06	G12A G16A G38A G38B
	08	I02A I02B I02C I12A I12B I12C I29A I29B I29C
	21B	X06A X06B
	Prä	B61B B61C B61D
77.61.11↔		BORP MBOR VAC VBOR
	01	B17A B17B
	04	E02A E02B E02C E36A E36B
	06	G12A G16A G38A G38B
	08	I02A I02B I02C I12A I12B I12C I29A I29B I29C
	Prä	B61B B61C B61D
77.61.12↔		BORP MBOR VAC VBOR
	01	B17A B17B
	04	E02A E02B E02C E36A E36B
	06	G12A G16A G38A G38B
	08	I02A I02B I02C I12A I12B I12C I29A I29B I29C
	Prä	B61B B61C B61D
77.61.20↔		BORP MBOR VAC VAC I VAC II VBOR
	01	B03A B03B B03C
	04	E02A E02B E02C E36A E36B
	06	G12A G16A G38A G38B
	08	I02A I02B I02C I12A I12B I12C I29A I29B I29C
	21B	X06A X06B
	Prä	B61B B61C B61D
77.61.99↔	Prä	B61B B61C B61D
	08	I02A I02B I02C I12A I12B I12C I28A I28B I28C
77.62.20↔		BORP MBOR VAC

PROC

PROC

CHOP	MDC	DRG
		VAC I VAC II VBOR
	04	E36A E36B
	06	G12A G16A G38A G38B
	08	I02A I02B I02C I12A I12B I12C I13A I13B I13C I13D
	21B	X06A X06B X06C
	Prä	B61B B61C B61D
77.62.99↔		BORP MBOR VAC VBOR
	04	E36A E36B
	06	G12A G16A G38A G38B
	08	I02A I02B I02C I12A I12B I12C I13A I13B I13C I13D
	21B	X06A X06B X06C
	Prä	B61B B61C B61D
77.63.20↔		BORP MBOR VAC VAC I VAC II VBOR
	04	E36A E36B
	06	G12A G16A G38A G38B
	08	I02A I02B I02C I12A I12B I12C I18A I18B I18C
	21B	X06A X06B X06C
	Prä	B61B B61C B61D
77.63.99↔		BORP MBOR VAC VBOR
	04	E36A E36B
	06	G12A G16A G38A G38B
	08	I02A I02B I02C I12A I12B I12C I18A I18B I18C
	21B	X06A X06B X06C
	Prä	B61B B61C B61D
77.64.20↔		BORP MBOR VAC VAC I VAC II VBOR
	04	E36A E36B
	06	G12A G16A G38A G38B
	08	I02A I02B I02C I12A I12B I12C I32A I32B I32C I32D I32E I32F
	21B	X05Z
	Prä	B61B B61C B61D
77.64.99↔		BORP MBOR VAC VBOR
	04	E36A E36B
	06	G12A G16A G38A G38B
	08	I02A I02B I02C I12A I12B I12C I32A I32B I32C I32D I32E I32F
	21B	X05Z
	Prä	B61B B61C B61D
77.65.20↔		BORP MBOR VAC VAC I VAC II VBOR
	04	E36A E36B
	06	G12A G16A G38A G38B
	08	I21A I21B
	21B	X04Z

CHOP	MDC	DRG
77.65.99↔		BORP MBOR VAC VBOR
	04	E36A E36B
	06	G12A G16A G38A G38B
	08	I21A I21B
	21B	X04Z
77.66.20↔		VAC I VAC II
	08	I18A I18B I18C I30A I30B I30C
77.66.99↔	08	I18A I18B I18C I30A I30B I30C
77.67.10↔	Prä	B61B B61C B61D
	08	I02A I02B I02C I12A I12B I12C I18A I18B I18C I30A I30B I30C
	21B	X06A X06B X06C
77.67.11↔	Prä	B61B B61C B61D
	08	I02A I02B I02C I12A I12B I12C I18A I18B I18C I30A I30B I30C
	21B	X06A X06B X06C
77.67.20↔		MBOR VAC VAC I VAC II VBOR
	06	G12A
	08	I02A I02B I02C I12A I12B I12C I18A I18B I18C I30A I30B I30C
	21B	X06A X06B X06C
	Prä	B61B B61C B61D
77.67.21↔		MBOR VAC VAC I VAC II VBOR
	06	G12A
	08	I02A I02B I02C I12A I12B I12C I18A I18B I18C I30A I30B I30C
	21B	X06A X06B X06C
	Prä	B61B B61C B61D
77.67.99↔	Prä	B61B B61C B61D
	08	I02A I02B I02C I12A I12B I12C I18A I18B I18C I30A I30B I30C
	21B	X06A X06B X06C
77.68.10↔		BORP MBOR VAC VBOR
	04	E36A E36B
	05	F04Z F13A F13B F13C
	06	G12A G16A G38A G38B
	08	I02A I02B I02C I12A I12B I12C I20A I20B I20C I20D I20E I20F I20G
	21B	X04Z
	Prä	B61B B61C B61D
77.68.11↔		BORP MBOR VAC VBOR
	04	E36A E36B
	05	F04Z F13A F13B F13C
	06	G12A G16A G38A G38B
	08	I02A I02B I02C

CHOP	MDC	DRG
		I12A I12B I12C I20A I20B I20C I20D I20E I20F I20G
	21B	X04Z
	Prä	B61B B61C B61D
77.68.20↔		BORP MBOR VAC VAC I VAC II VBOR
	04	E36A E36B
	05	F04Z F13A F13B F13C
	06	G12A G16A G38A G38B
	08	I02A I02B I02C I12A I12B I12C I20A I20B I20C I20D I20E I20F I20G
	21B	X04Z
	Prä	B61B B61C B61D
77.68.21↔		BORP MBOR VAC VAC I VAC II VBOR
	04	E36A E36B
	05	F04Z F13A F13B F13C
	06	G12A G16A G38A G38B
	08	I02A I02B I02C I12A I12B I12C I20A I20B I20C I20D I20E I20F I20G
	21B	X04Z
	Prä	B61B B61C B61D
77.68.99↔		BORP MBOR VAC VBOR
	04	E36A E36B
	05	F04Z F13A F13B F13C
	06	G12A G16A G38A G38B
	08	I02A I02B I02C I12A I12B I12C I20A I20B I20C I20D I20E I20F I20G
	21B	X04Z
	Prä	B61B B61C B61D
77.69.10↔		BORP EML MBOR VAC VBOR
	01	B03A B03B B03C
	04	E36A E36B
	06	G12A G16A G38A G38B
	08	I02A I02B I02C I32A I32B I32C I32D I32E I32F
	21B	X05Z
77.69.12↔		BORP EML MBOR VAC VBOR
	04	E36A E36B
	06	G12A G16A G38A G38B
	08	I02A I02B I02C I12A I12B I12C I21A I21B
	21B	X06A X06B X06C
	Prä	B61B B61C B61D
77.69.13↔		BORP EML MBOR VAC VBOR

CHOP	MDC	DRG
	01	B03A B03B B03C
	04	E36A E36B
	05	F04Z F13A F13B F13C
	06	G12A G16A G38A G38B
	08	I02A I02B I02C I12A I12B I12C I20A I20B I20C I20D I20E I20F I20G
	10	K09A K09B
	21B	X04Z
	Prä	B61B B61C B61D
77.69.20↔		BORP EML MBOR VAC VAC I VAC II VBOR
	01	B03A B03B B03C
	04	E36A E36B
	05	F04Z F13A F13B F13C
	06	G12A G16A G38A G38B
	08	I02A I02B I02C I32A I32B I32C I32D I32E I32F
	09	J02A J02B J03A J03B J04Z J11A J11B
	21B	X05Z
77.69.22↔		BORP EML MBOR VAC VAC I VAC II VBOR
	04	E36A E36B
	05	F04Z F13A F13B F13C
	06	G12A G16A G38A G38B
	08	I02A I02B I02C I12A I12B I12C I21A I21B
	09	J02A J02B J03A J03B J04Z J11A J11B
	21B	X06A X06B X06C
	Prä	B61B B61C B61D
77.69.23↔		BORP EML MBOR VAC VAC I VAC II VBOR
	01	B03A B03B B03C
	04	E36A E36B
	05	F04Z F13A F13B F13C
	06	G12A G16A G38A G38B
	08	I02A I02B I02C I12A I12B I12C I20A I20B I20C I20D I20E I20F I20G
	09	J02A J02B J03A J03B J04Z J11A J11B
	10	K09A K09B
	21B	X04Z
	Prä	B61B B61C B61D
77.81.00↔	Prä	B61B B61C B61D
	08	I02A I02B I02C I12A I12B I12C I28A I28B I28C
77.81.10↔	Prä	B61B B61C B61D
	08	I02A I02B I02C I12A I12B I12C I29A I29B I29C
77.81.11↔		BORP MBOR VAC VBOR
	01	B17A B17B
	04	E02A E02B E02C E36A E36B
	06	G12A G16A G38A G38B
	08	I02A I02B I02C I12A I12B I12C I29A I29B I29C
	Prä	B61B B61C B61D
77.81.12↔		BORP MBOR VAC VBOR
	01	B17A B17B
	04	E02A E02B E02C E36A E36B
	06	G12A G16A G38A G38B
	08	I02A I02B I02C I12A I12B I12C I29A I29B I29C
	Prä	B61B B61C B61D
77.81.99↔	Prä	B61B B61C B61D
	08	I02A I02B I02C I12A I12B I12C I28A I28B I28C
77.82↔		BORP MBOR VAC VBOR
	04	E36A E36B
	06	G12A G16A G38A G38B
	08	I02A I02B I02C I12A I12B I12C I13A I13B I13C I13D
	21B	X06A X06B X06C
	Prä	B61B B61C B61D
77.83↔		BORP MBOR VAC VBOR
	04	E36A E36B
	06	G12A G16A G38A G38B
	08	I02A I02B I02C I12A I12B I12C I31A I31B
	21B	X06A X06B X06C
	Prä	B61B B61C B61D
77.84↔		BORP MBOR VAC VBOR
	04	E36A E36B
	06	G12A G16A G38A G38B
	08	I02A I02B I02C I12A I12B I12C I32A I32B I32C I32D I32E I32F
	09	J02A J02B J03A J03B J04Z J11A J11B
	21B	X05Z
	Prä	B61B B61C B61D
77.85↔		BORP MBOR VAC VBOR
	04	E36A E36B
	06	G12A G16A G38A G38B
	08	I21A I21B
	21B	X04Z
77.86↔		BORP EML MBOR VAC VBOR
	01	B03A B03B B03C
	04	E36A E36B
	06	G12A G16A G38A G38B
	08	I02A I02B I02C I12A I12B I12C I18A I18B I18C I30A I30B I30C
	21B	X04Z
	Prä	B61B B61C B61D
77.87.00↔		BORP MBOR VAC VBOR
	04	E36A E36B
	06	G12A G16A G38A G38B
	08	I02A I02B I02C I12A I12B I12C I13A I13B I13C I13D
	21B	X04Z
	Prä	B61B B61C B61D
77.87.10↔		BORP MBOR VAC VBOR
	04	E36A E36B
	06	G12A G16A G38A G38B
	08	I02A I02B I02C I12A I12B I12C I13A I13B I13C I13D
	21B	X04Z
	Prä	B61B B61C B61D
77.87.11↔		BORP MBOR VAC VBOR
	04	E36A E36B
	06	G12A G16A G38A G38B
	08	I02A I02B I02C I12A I12B I12C I13A I13B I13C I13D
	21B	X04Z
	Prä	B61B B61C B61D
77.87.99↔		BORP MBOR VAC VBOR
	04	E36A E36B
	06	G12A G16A G38A G38B
	08	I02A I02B I02C I12A I12B I12C I13A I13B I13C I13D
	21B	X04Z
	Prä	B61B B61C B61D
77.88↔		BORP MBOR VAC VBOR
	04	E36A E36B
	05	F04Z F13A F13B F13C
	06	G12A G16A G38A G38B
	08	I02A I02B I02C I12A I12B I12C I20A I20B I20C I20D I20E I20F I20G

PROC

PROC

CHOP	MDC	DRG
	21B	X04Z
	Prä	B61B B61C B61D
77.89.10↔		BORP EML MBOR VAC VBOR
	01	B03A B03B B03C
	04	E36A E36B
	06	G12A G16A G38A G38B
	08	I02A I02B I02C I32A I32B I32C I32D I32E I32F
	09	J02A J02B J03A J03B J04Z J11A J11B
	21B	X05Z
77.89.30↔		BORP EML MBOR VAC VBOR
	04	E36A E36B
	06	G12A G16A G38A G38B
	08	I28A I28B I28C
	13	N11A N11B
	21B	X04Z X06A X06B X06C
77.89.40↔		BORP EML MBOR VAC VBOR
	01	B03A B03B B03C
	04	E36A E36B
	05	F04Z F13A F13B F13C
	06	G12A G16A G38A G38B
	08	I02A I02B I02C I12A I12B I12C I20A I20B I20C I20D I20E I20F I20G
	09	J02A J02B J03A J03B J04Z J11A J11B
	10	K09A K09B
	13	N11A N11B
	21B	X04Z X06A X06B X06C
	Prä	B61B B61C B61D
77.91.00↔		BORP MBOR VAC VAC I VAC II VBOR
	04	E36A E36B
	06	G12A G16A G33Z G38A G38B G38C
	07	H33Z
	08	I02A I02B I02C I12A I12B I12C I29A I29B I29C
	09	J01A J01B
	11	L33Z
	21B	X06A X06B X07A X07B
	Prä	B61B B61C B61D
77.91.10↔		BORP KORP MBOR MKOR VAC VAC I VAC II VBOR VKOR
	04	E36A E36B
	06	G12A G16A G33Z G38A G38B G38C
	07	H33Z
	08	I02A I02B I02C I12A I12B I12C I29A I29B I29C
	09	J01A J01B
	11	L33Z
	21B	X06A X06B X07A X07B
	Prä	B61B B61C B61D
77.91.11↔		BORP KORP MBOR MKOR VAC VAC I VAC II VBOR VKOR
	01	B03A B03B B03C
	04	E02A E02B E02C E36A E36B
	06	G12A G16A G33Z G38A G38B G38C
	07	H33Z
	08	I02A I02B I02C I12A I12B I12C I28B I59Z
	09	J01A J01B J02A J02B J03A J03B J04Z J11A J11B
	10	K09A K09B
	11	L33Z
	21B	X06A X06B X07A X07B
	Prä	B61B B61C B61D
77.91.12↔		BORP KORP MBOR MKOR VAC VAC I VAC II VBOR VKOR
	01	B03A B03B B03C
	04	E02A E02B E02C E36A E36B
	06	G12A G16A G33Z G38A G38B G38C
	07	H33Z
	08	I02A I02B I02C I12A I12B I12C I28B I59Z
	09	J01A J01B J02A J02B J03A J03B J04Z J11A J11B
	10	K09A K09B
	11	L33Z
	21B	X06A X06B X07A X07B
	Prä	B61B B61C B61D
77.91.13↔		BORP KORP MBOR MKOR VAC VAC I VAC II VBOR VKOR
	01	B03A B03B B03C
	04	E02A E02B E02C E36A E36B
	06	G12A G16A G33Z G38A G38B G38C
	07	H33Z
	08	I02A I02B I02C I12A I12B I12C I28B I59Z
	09	J01A J01B J02A J02B J03A J03B J04Z J11A J11B
	10	K09A K09B
	11	L33Z
	21B	X06A X06B X07A X07B
	Prä	B61B B61C B61D
77.91.99↔		BORP KORP MBOR MKOR VAC VAC I VAC II VBOR VKOR
	04	E36A E36B
	06	G12A G16A G33Z G38A G38B G38C
	07	H33Z
	08	I02A I02B I02C I12A I12B I12C I29A I29B I29C
	09	J01A J01B
	11	L33Z
	21B	X06A X06B X07A X07B
	Prä	B61B B61C B61D
77.92↔		BORP KORP MBOR MKOR VAC VAC I VAC II VBOR VKOR
	04	E36A E36B
	06	G12A G16A G38A G38B
	08	I02A I02B I02C I12A I12B I12C I13A I13B I13C I13D
	21B	X06A X06B X06C
	Prä	B61B B61C B61D
77.93↔		BORP KORP MBOR MKOR VAC VAC I VAC II VBOR VKOR
	04	E36A E36B
	06	G12A G16A G38A G38B
	08	I02A I02B I02C I12A I12B I12C I31A
	21B	X06A X06B X06C
	Prä	B61B B61C B61D
77.94↔		BORP KORP MBOR MKOR VAC VAC I VAC II VBOR VKOR
	04	E36A E36B
	06	G12A G16A G38A G38B
	08	I02A I02B I02C I12A I12B I12C I32A I32B I32C I32D I32E I32F
	21B	X05Z
	Prä	B61B B61C B61D
77.95↔		BORP KORP MBOR MKOR VAC VAC I VAC II VBOR VKOR
	04	E36A E36B
	06	G12A G16A G38A G38B
	08	I02A I02B I02C I08A I08B I08C
	21B	X04Z
77.96↔		BORP EML KORP MBOR MKOR VAC VAC I VAC II VBOR VKOR
	04	E36A E36B
	06	G12A G16A G38A G38B
	08	I02A I02B I02C I12A I12B I12C I18A I18B I18C I30A I30B I30C
	21B	X04Z
	Prä	B61B B61C B61D
77.97.00↔		BORP KORP MBOR MKOR VAC VAC I VAC II VBOR VKOR
	04	E36A E36B

CHOP	MDC	DRG
	06	G12A G16A G38A G38B
	08	I02A I02B I02C I12A I12B I12C I13A I13B I13C I13D
	21B	X04Z
	Prä	B61B B61C B61D
77.97.10↔		BORP KORP MBOR MKOR VAC VAC I VAC II VBOR VKOR
	04	E36A E36B
	06	G12A G16A G38A G38B
	08	I02A I02B I02C I12A I12B I12C I13A I13B I13C I13D
	21B	X04Z
	Prä	B61B B61C B61D
77.97.11↔		BORP KORP MBOR MKOR VAC VAC I VAC II VBOR VKOR
	04	E36A E36B
	06	G12A G16A G38A G38B
	08	I02A I02B I02C I12A I12B I12C I13A I13B I13C I13D
	21B	X04Z
	Prä	B61B B61C B61D
77.97.99↔		BORP KORP MBOR MKOR VAC VAC I VAC II VBOR VKOR
	04	E36A E36B
	06	G12A G16A G38A G38B
	08	I02A I02B I02C I12A I12B I12C I13A I13B I13C I13D
	21B	X04Z
	Prä	B61B B61C B61D
77.98.10↔		BORP MBOR VAC VAC I VAC II VBOR
	04	E36A E36B
	05	F04Z F13A F13B F13C
	06	G12A G16A G38A G38B
	08	I02A I02B I02C I12A I12B I12C I20A I20B I20C I20D I20G
	21B	X04Z
	Prä	B61B B61C B61D
77.98.11↔		BORP MBOR VAC VAC I VAC II VBOR
	04	E36A E36B
	05	F04Z F13A F13B F13C
	06	G12A G16A G38A G38B
	08	I02A I02B I02C I12A I12B I12C I20A I20B I20C I20D I20G
	21B	X04Z
	Prä	B61B B61C B61D
77.98.99↔		BORP MBOR VAC VAC I VAC II VBOR
	04	E36A E36B
	05	F04Z F13A F13B F13C
	06	G12A G16A G38A G38B
	08	I02A I02B I02C I12A I12B I12C I20A I20B I20C I20D I20G
	21B	X04Z
	Prä	B61B B61C B61D
77.99.10↔		BORP EML MBOR VAC VAC I VAC II VBOR
	04	E36A E36B
	05	F04Z F13A F13B F13C
	06	G12A G16A G38A G38B
	08	I02A I02B I02C I08A I08B I12A I12B I12C I32A I32B I32C I32D I32E I32F
	10	K09A K09B
	21B	X05Z
	Prä	B61B B61C B61D
77.99.30↔		BORP EML KORP MBOR MKOR VAC VAC I VAC II VBOR VKOR
	04	E36A E36B
	06	G12A G16A G38A G38B
	08	I28A I28B I28C
	21B	X04Z X06A X06B X06C
77.99.40↔		BORP EML MBOR VAC VAC I VAC II VBOR
	04	E36A E36B
	05	F04Z F13A F13B F13C
	06	G12A G16A G38A G38B
	08	I02A I02B I02C I12A I12B I12C I20A I20B I20C I20D I20G
	10	K09A K09B
	21B	X04Z
	Prä	B61B B61C B61D
78.01.09↔	Prä	B61B B61C B61D
	08	I02A I02B I02C I12A I12B I12C I29A I29B I29C
	21B	X06A X06B X06C
78.01.10↔		BORP EML KORP MBOR MKOR VAC VAC I VAC II VB VBOR VKOR
	04	E36A E36B
	06	G12A G16A G38A G38B
	08	I02A I02B I02C I08A I08B
	21B	X06A X06B X06C
	22	Y02A Y02B
78.01.11↔		BORP EML KORP MBOR MKOR VAC VAC I VAC II VBOR VKOR
	04	E36A E36B
	06	G12A G16A G38A G38B
	08	I02A I02B I02C I12A I12B I12C I29A I29B
	21B	X06A X06B X06C
	Prä	B61B B61C B61D
78.01.13↔		BORP EML MBOR VAC VAC I VAC II VBOR
	04	E36A E36B
	06	G12A G16A G38A G38B
	08	I02A I02B I02C I12A I12B I12C I29A I29B
	21B	X06A X06B X06C
	Prä	B61B B61C B61D
78.01.14↔		BORP EML MBOR VAC VAC I VAC II VBOR
	04	E36A E36B
	06	G12A G16A G38A G38B
	08	I02A I02B I02C I12A I12B I12C I29A I29B
	21B	X06A X06B X06C
	Prä	B61B B61C B61D
78.01.15↔		BORP EML MBOR VAC VAC I VAC II VBOR
	04	E36A E36B
	06	G12A G16A G38A G38B
	08	I02A I02B I02C I12A I12B I12C I29A I29B
	21B	X06A X06B X06C
	Prä	B61B B61C B61D
78.01.18↔		BORP EML MBOR VAC VAC I VAC II VBOR
	04	E36A E36B
	06	G12A G16A G38A G38B
	08	I02A I02B I02C I12A I12B I12C I29A I29B
	21B	X06A X06B X06C
	Prä	B61B B61C B61D
78.02.10↔		BORP EML KORP MBOR MKOR VAC VAC I VAC II VB VBOR VKOR
	04	E36A E36B
	06	G12A G16A G38A G38B
	08	I02A I02B I02C I08A I08B
	21B	X01A X01B X06A X06B X06C X07A X07B
	22	Y02A Y02B
78.02.11↔		BORP EML KORP

PROC

PROC

CHOP	MDC	DRG
		MBOR MKOR VAC VAC I VAC II VBOR VKOR
	04	E36A E36B
	06	G12A G16A G38A G38B
	08	I02A I02B I02C I12A I12B I12C I13A I13B I32C
	21B	X01A X01B X06A X06B X06C X07A X07B
	Prä	B61B B61C B61D
78.02.13↔		BORP EML MBOR VAC VAC I VAC II VBOR
	04	E36A E36B
	06	G12A G16A G38A G38B
	08	I02A I02B I02C I12A I12B I12C I13A I13B I32C
	21B	X01A X01B X06A X06B X06C X07A X07B
	Prä	B61B B61C B61D
78.03.10↔		BORP EML KORP MBOR MKOR VAC VAC I VAC II VB VBOR VKOR
	04	E36A E36B
	06	G12A G16A G38A G38B
	08	I02A I02B I02C I08A I08B
	21B	X01A X01B X06A X06B X06C X07A X07B
	22	Y02A Y02B
78.03.11↔		BORP EML KORP MBOR MKOR VAC VAC I VAC II VBOR VKOR
	04	E36A E36B
	06	G12A G16A G38A G38B
	08	I02A I02B I02C I31A I32A I32B I32C
	21B	X01A X01B X06A X06B X06C X07A X07B
78.03.13↔		BORP EML MBOR VAC VAC I VAC II VBOR
	04	E36A E36B
	06	G12A G16A G38A G38B
	08	I02A I02B I02C I12A I12B I12C I31A I32A I32B I32C
	21B	X01A X01B X06A X06B X06C X07A X07B
	Prä	B61B B61C B61D
78.04.10↔		BORP EML KORP MBOR MKOR VAC VAC I VAC II VB VBOR VKOR
	04	E36A E36B
	06	G12A G16A G38A G38B
	08	I02A I02B I02C I08A I08B
	21B	X01A X01B X05Z X07A X07B
	22	Y02A Y02B
78.04.11↔		BORP EML KORP MBOR MKOR VAC VAC I VAC II VBOR VKOR
	04	E36A E36B
	06	G12A G16A G38A G38B
	08	I02A I02B I02C I12A I12B I12C I32A I32B I32C I32D I32E I32F
	21B	X01A X01B X05Z X07A X07B
	Prä	B61B B61C B61D
78.04.13↔		BORP EML MBOR VAC VAC I VAC II VBOR
	04	E36A E36B
	06	G12A G16A G38A G38B
	08	I02A I02B I02C I12A I12B I12C I32A I32B I32C I32D I32E I32F
	21B	X01A X01B X05Z X07A X07B
	Prä	B61B B61C B61D
78.05.10↔		BORP EML KORP MBOR MKOR VAC VAC I VAC II VB VBOR VKOR
	01	B03A B03B B03C
	04	E36A E36B
	06	G12A G16A G38A G38B
	08	I02A I02B I02C I08A I08B
	21B	X01A X01B X04Z X07A X07B
	22	Y02A Y02B
78.05.11↔		BORP EML KORP MBOR MKOR VAC VAC I VAC II VBOR VKOR
	01	B03A B03B B03C
	04	E36A E36B
	06	G12A G16A G38A G38B
	08	I02A I02B I02C I08A I08B I08C I32C
	21B	X01A X01B X04Z X07A X07B
78.05.13↔		BORP EML MBOR VAC VAC I VAC II VBOR
	01	B03A B03B B03C
	04	E36A E36B
	06	G12A G16A G38A G38B
	08	I02A I02B I02C I08A I08B I08C I32C
	21B	X01A X01B X04Z X07A X07B
78.06.10↔		BORP EML KORP MBOR MKOR VAC VAC I VAC II VB VBOR VKOR
	04	E36A E36B
	06	G12A G16A G38A G38B
	08	I02A I02B I02C I08A I08B
	21B	X04Z X06A X06B X06C
	22	Y02A Y02B
78.06.20↔		BORP EML KORP MBOR MKOR VAC VAC I VAC II VBOR VKOR
	04	E36A E36B
	06	G12A G16A G38A G38B
	08	I02A I02B I02C I12A I12B I12C I30A I30B I30C
	21B	X04Z
	Prä	B61B B61C B61D
78.07.10↔		BORP EML KORP MBOR MKOR VAC VAC I VAC II VB VBOR VKOR
	04	E36A E36B
	06	G12A G16A G38A G38B
	08	I02A I02B I02C I08A I08B
	21B	X01A X01B X04Z X07A X07B
	22	Y02A Y02B
78.07.11↔		BORP EML KORP MBOR MKOR VAC VAC I VAC II VBOR VKOR
	04	E36A E36B
	06	G12A G16A G38A G38B
	08	I02A I02B I02C I12A I12B I12C I13A I13B I32C
	21B	X01A X01B X04Z X07A X07B
	Prä	B61B B61C B61D
78.07.13↔		BORP EML MBOR VAC VAC I VAC II VBOR
	04	E36A E36B
	06	G12A G16A G38A G38B
	08	I02A I02B I02C I12A I12B I12C I13A I13B I32C
	21B	X01A X01B X04Z X07A X07B
	Prä	B61B B61C B61D
78.07.20↔		BORP EML KORP MBOR MKOR VAC VAC I VAC II VB VBOR VKOR
	04	E36A E36B
	06	G12A G16A G38A

CHOP	MDC	DRG
		G38B
	08	I02A I02B I02C I08A I08B
	21B	X01A X01B X04Z X07A X07B
	22	Y02A Y02B
78.07.21↔		BORP EML KORP MBOR MKOR VAC VAC I VAC II VBOR VKOR
	04	E36A E36B
	06	G12A G16A G38A G38B
	08	I02A I02B I02C I12A I12B I12C I13A I13B I32C
	21B	X01A X01B X04Z X07A X07B
	Prä	B61B B61C B61D
78.07.23↔		BORP EML MBOR VAC VAC I VAC II VBOR
	04	E36A E36B
	06	G12A G16A G38A G38B
	08	I02A I02B I02C I12A I12B I12C I13A I13B I32C
	21B	X01A X01B X04Z X07A X07B
	Prä	B61B B61C B61D
78.08.10↔		BORP EML KORP MBOR MKOR VAC VAC I VAC II VB VBOR VKOR
	04	E36A E36B
	06	G12A G16A G38A G38B
	08	I02A I02B I02C I08A I08B
	21B	X04Z
	22	Y02A Y02B
78.08.11↔		BORP EML KORP MBOR MKOR VAC VAC I VAC II VBOR VKOR
	04	E36A E36B
	06	G12A G16A G38A G38B
	08	I02A I02B I02C I12A I12B I12C I20A I20B I20C I20D I20G
	21B	X04Z
	Prä	B61B B61C B61D
78.08.13↔		BORP EML MBOR VAC VAC I VAC II VBOR
	04	E36A E36B
	06	G12A G16A G38A G38B
	08	I02A I02B I02C I12A I12B I12C I20A I20B I20C I20D I20G
	21B	X04Z
	Prä	B61B B61C B61D
78.09.10↔		BORP EML KORP MBOR MKOR VAC VAC I VAC II VB VBOR VKOR
	04	E36A E36B
	06	G12A G16A G38A G38B
	08	I02A I02B I02C I08A I08B
	21B	X01A X01B X04Z X05Z X06A X06B X06C X07A X07B
	22	Y02A Y02B
78.09.11↔		BORP EML KORP MBOR MKOR VAC VAC I VAC II VBOR VKOR
	04	E36A E36B
	06	G12A G16A G38A G38B
	08	I02A I02B I02C I08A I08B I12A I12B I12C I20D I28A I28B I32A I32B I32C I32D I32E I32F
	21B	X01A X01B X04Z X05Z X06A X06B X06C X07A X07B
	Prä	B61B B61C B61D
78.09.13↔		BORP EML MBOR VAC VAC I VAC II VBOR
	04	E36A E36B
	06	G12A G16A G38A G38B
	08	I02A I02B I02C I08A I08B I12A I12B I12C I20D I28A I28B I28C I32A I32B I32C I32D I32E I32F
	21B	X01A X01B X04Z X05Z X06A X06B X06C X07A X07B
	Prä	B61B B61C B61D
78.09.30↔		BORP EML KORP MBOR MKOR VAC VAC I VAC II VB VBOR VKOR
	04	E36A E36B
	06	G12A G16A G38A G38B
	08	I02A I02B I02C I08A I08B
	21B	X01A X01B X04Z X06A X06B X06C X07A X07B
	22	Y02A Y02B
78.09.31↔		BORP EML KORP MBOR MKOR VAC VAC I VAC II VBOR VKOR
	04	E36A E36B
	06	G12A G16A G38A G38B
	08	I02A I02B I02C I08A I08B I08C
	21B	X01A X01B X04Z X06A X06B X06C X07A X07B
78.09.33↔		BORP EML MBOR VAC VAC I VAC II VBOR
	04	E36A E36B
	06	G12A G16A G38A G38B
	08	I02A I02B I02C I08A I08B I08C
	21B	X01A X01B X04Z X06A X06B X06C X07A X07B
78.09.40↔		BORP EML KORP MBOR MKOR VAC VAC I VAC II VB VBOR VKOR
	04	E36A E36B
	05	F04Z F13A F13B F13C
	06	G12A G16A G38A G38B
	08	I02A I02B I02C I08A I08B
	21B	X01A X01B X04Z X07A X07B
	22	Y02A Y02B
78.09.41↔		BORP EML KORP MBOR MKOR VAC VAC I VAC II VBOR VKOR
	04	E36A E36B
	05	F04Z F13A F13B F13C
	06	G12A G16A G38A G38B
	08	I20A I20B I20C I20D I20G
	21B	X01A X01B X04Z X07A X07B
78.09.42↔		BORP EML MBOR VAC VAC I VAC II VBOR
	04	E36A E36B
	05	F04Z F13A F13B F13C
	06	G12A G16A G38A G38B
	08	I20A I20B I20C I20D I20G
	21B	X01A X01B X04Z X07A X07B
78.09.90↔		BORP KORP MBOR MKOR VAC VAC I VAC II VB VBOR VKOR
	04	E36A E36B
	06	G12A G16A G38A G38B
	08	I02A I02B I02C I08A I08B
	21B	X01A X01B X04Z X05Z X06A X06B X06C X07A X07B
	22	Y02A Y02B
78.09.91↔		BORP KORP MBOR MKOR VAC VAC I VAC II VBOR VKOR
	04	E36A E36B
	06	G12A G16A G38A G38B
	08	I02A I02B I02C I08A I08B I08C I12A I12B I12C

PROC

PROC

CHOP	MDC	DRG
		I20D I28A I28B
		I32A I32B I32C
	21B	X01A X01B X04Z
		X05Z X06A X06B
		X06C X07A X07B
	Prä	B61B B61C B61D
78.10‡↔	01	B60A
	08	I08B I11Z I13A
78.11.10↔		BORP EML MBOR
		VAC VAC I VAC II
		VBOR
	04	E02A E02B E02C
		E36A E36B
	05	F21A F21B F21C
	06	G12A G12B G16A
		G38A G38B
	08	I02A I02B I02C
		I12A I12B I12C
		I29A I29B I29C
	09	J11A J11B
	10	K09A K09B
	21B	X06A X06B X06C
	Prä	B61B B61C B61D
78.11.11↔		BORP EML MBOR
		VAC VAC I VAC II
		VBOR
	04	E02A E02B E02C
		E36A E36B
	05	F21A F21B F21C
	06	G12A G12B G16A
		G38A G38B
	08	I02A I02B I02C
		I12A I12B I12C
		I29A I29B I29C
	09	J11A J11B
	10	K09A K09B
	21B	X06A X06B X06C
	Prä	B61B B61C B61D
78.11.12↔		BORP EML MBOR
		VAC VAC I VAC II
		VBOR
	04	E02A E02B E02C
		E36A E36B
	05	F21A F21B F21C
	06	G12A G12B G16A
		G38A G38B
	08	I02A I02B I02C
		I12A I12B I12C
		I29A I29B I29C
	09	J11A J11B
	10	K09A K09B
	21B	X06A X06B X06C
	Prä	B61B B61C B61D
78.11.20↔		BORP EML MBOR
		VAC VAC I VAC II
		VBOR
	04	E02A E02B E02C
		E36A E36B
	05	F21A F21B F21C
	06	G12A G12B G16A
		G38A G38B
	08	I29A I29B I29C
	09	J11A J11B
	10	K09A K09B
	21B	X06A X06B X06C
78.11.21↔		BORP EML MBOR
		VAC VAC I VAC II
		VBOR
	04	E02A E02B E02C
		E36A E36B
	05	F21A F21B F21C
	06	G12A G12B G16A
		G38A G38B
	08	I02A I02B I02C
		I12A I12B I12C
		I28A I28B
	09	J11A J11B
	10	K09A K09B
	21B	X06A X06B X06C
	Prä	B61B B61C B61D
78.12.10↔		BORP EML MBOR
		VAC VAC I VAC II
		VBOR
	04	E02A E02B E02C
		E36A E36B
	05	F21A F21B F21C
	06	G12A G12B G16A
		G38A G38B
	08	I02A I02B I02C
		I12A I12B I12C
		I13A I13B I13C
		I13D
	09	J11A J11B
	10	K09A K09B
	21B	X06A X06B X06C
	Prä	B61B B61C B61D
78.12.11↔		BORP EML MBOR
		VAC VAC I VAC II
		VBOR
	04	E02A E02B E02C
		E36A E36B
	05	F21A F21B F21C
	06	G12A G12B G16A
		G38A G38B
	08	I02A I02B I02C
		I12A I12B I12C
		I13A I13B I13C
		I13D
	09	J11A J11B
	10	K09A K09B
	21B	X06A X06B X06C
	Prä	B61B B61C B61D
78.12.90↔		BORP EML MBOR
		VAC VAC I VAC II
		VBOR
	04	E02A E02B E02C
		E36A E36B
	05	F21A F21B F21C
	06	G12A G12B G16A
		G38A G38B
	08	I02A I02B I02C
		I12A I12B I12C
		I13A I13B I13C
		I13D
	09	J11A J11B
	10	K09A K09B
	21B	X06A X06B X06C
	Prä	B61B B61C B61D
78.12.91↔		BORP EML MBOR
		VAC VAC I VAC II
		VBOR
	04	E02A E02B E02C
		E36A E36B
	05	F21A F21B F21C
	06	G12A G12B G16A
		G38A G38B
	08	I02A I02B I02C
		I12A I12B I12C
		I13A I13B I13C
		I13D
	09	J11A J11B
	10	K09A K09B
	21B	X06A X06B X06C
	Prä	B61B B61C B61D
78.12.99↔		BORP EML MBOR
		VAC VAC I VAC II
		VBOR
	04	E02A E02B E02C
		E36A E36B
	05	F21A F21B F21C
	06	G12A G12B G16A
		G38A G38B
	08	I02A I02B I02C
		I12A I12B I12C
		I13A I13B I13C
		I13D
	09	J11A J11B
	10	K09A K09B
	21B	X06A X06B X06C
	Prä	B61B B61C B61D
78.13.10↔		BORP EML MBOR
		VAC VAC I VAC II
		VBOR
	04	E02A E02B E02C
		E36A E36B
	05	F21A F21B F21C
	06	G12A G12B G16A
		G38A G38B
	08	I02A I02B I02C
		I12A I12B I12C
		I31A I31B
	09	J11A J11B
	10	K09A K09B
	21B	X05Z X06A X06B
		X06C
	Prä	B61B B61C B61D
78.13.11↔		BORP EML MBOR
		VAC VAC I VAC II
		VBOR
	04	E02A E02B E02C
		E36A E36B
	05	F21A F21B F21C
	06	G12A G12B G16A
		G38A G38B
	08	I02A I02B I02C
		I12A I12B I12C
		I31A I31B
	09	J11A J11B
	10	K09A K09B
	21B	X05Z X06A X06B
		X06C
	Prä	B61B B61C B61D
78.13.12↔		BORP EML MBOR
		VAC VAC I VAC II
		VBOR
	04	E02A E02B E02C
		E36A E36B
	05	F21A F21B F21C

CHOP	MDC	DRG
	06	G12A G12B G16A G38A G38B
	08	I02A I02B I02C I12A I12B I12C I31A I31B
	09	J11A J11B
	10	K09A K09B
	21B	X05Z X06A X06B X06C
	Prä	B61B B61C B61D
78.13.13↔		BORP EML MBOR VAC VAC I VAC II VBOR
	04	E02A E02B E02C E36A E36B
	05	F21A F21B F21C
	06	G12A G12B G16A G38A G38B
	08	I02A I02B I02C I12A I12B I12C I31A I31B
	09	J11A J11B
	10	K09A K09B
	21B	X05Z X06A X06B X06C
	Prä	B61B B61C B61D
78.13.20↔		BORP EML MBOR VAC VAC I VAC II VBOR
	04	E02A E02B E02C E36A E36B
	05	F21A F21B F21C
	06	G12A G12B G16A G38A G38B
	08	I02A I02B I02C I12A I12B I12C I31A I31B
	09	J11A J11B
	10	K09A K09B
	21B	X05Z X06A X06B X06C
	Prä	B61B B61C B61D
78.13.99↔		BORP EML MBOR VAC VAC I VAC II VBOR
	04	E02A E02B E02C E36A E36B
	05	F21A F21B F21C
	06	G12A G12B G16A G38A G38B
	08	I02A I02B I02C I12A I12B I12C I31A I31B
	09	J11A J11B
	10	K09A K09B
	21B	X05Z X06A X06B X06C
	Prä	B61B B61C B61D
78.14.10↔		BORP EML MBOR VAC VAC I VAC II VBOR
	04	E02A E02B E02C E36A E36B
	05	F21A F21B F21C
	06	G12A G12B G16A G38A G38B
	08	I02A I02B I02C I12A I12B I12C I32A I32B I32C I32D I32E I32F
	09	J11A J11B
	10	K09A K09B
	21B	X05Z
	Prä	B61B B61C B61D
78.14.11↔		BORP EML MBOR VAC VAC I VAC II VBOR
	04	E02A E02B E02C E36A E36B
	05	F21A F21B F21C
	06	G12A G12B G16A G38A G38B
	08	I02A I02B I02C I12A I12B I12C I32A I32B I32C I32D I32E I32F
	09	J11A J11B
	10	K09A K09B
	21B	X05Z
	Prä	B61B B61C B61D
78.14.99↔		BORP EML MBOR VAC VAC I VAC II VBOR
	04	E02A E02B E02C E36A E36B
	05	F21A F21B F21C
	06	G12A G12B G16A G38A G38B
	08	I02A I02B I02C I12A I12B I12C I32A I32B I32C I32D I32E I32F
	09	J11A J11B
	10	K09A K09B
	21B	X05Z
	Prä	B61B B61C B61D
78.15.10↔		BORP EML MBOR VAC VAC I VAC II VBOR
	01	B03A B03B B03C
	04	E02A E02B E02C E36A E36B
	05	F21A F21B F21C
	06	G12A G12B G16A G38A G38B
	08	I02A I02B I02C I08A I08B I08C
	09	J11A J11B
	10	K09A K09B
	21B	X04Z
78.15.20↔		BORP EML MBOR VAC VAC I VAC II VBOR
	04	E02A E02B E02C E36A E36B
	05	F21A F21B F21C
	06	G12A G12B G16A G38A G38B
	08	I02A I02B I02C I08A I08B I08C
	09	J11A J11B
	10	K09A K09B
	21B	X04Z
78.15.30↔		BORP EML MBOR VAC VAC I VAC II VBOR
	04	E02A E02B E02C E36A E36B
	05	F21A F21B F21C
	06	G12A G12B G16A G38A G38B
	08	I02A I02B I02C I08A I08B I08C I12A I12B I12C
	09	J11A J11B
	10	K09A K09B
	21B	X04Z
	Prä	B61B B61C B61D
78.15.31↔		BORP EML MBOR VAC VAC I VAC II VBOR
	04	E02A E02B E02C E36A E36B
	05	F21A F21B F21C
	06	G12A G12B G16A G38A G38B
	08	I02A I02B I02C I08A I08B I08C I12A I12B I12C
	09	J11A J11B
	10	K09A K09B
	21B	X04Z
	Prä	B61B B61C B61D
78.15.40↔		BORP EML MBOR VAC VAC I VAC II VBOR
	01	B03A B03B B03C
	04	E02A E02B E02C E36A E36B
	05	F21A F21B F21C
	06	G12A G12B G16A G38A G38B
	08	I02A I02B I02C I08A I08B I08C I12A I12B I12C
	09	J11A J11B
	10	K09A K09B
	21B	X04Z
	Prä	B61B B61C B61D
78.15.99↔		BORP EML MBOR VAC VAC I VAC II VBOR
	01	B03A B03B B03C
	04	E02A E02B E02C E36A E36B
	05	F21A F21B F21C
	06	G12A G12B G16A G38A G38B
	08	I02A I02B I02C I08A I08B I08C I12A I12B I12C
	09	J11A J11B
	10	K09A K09B
	21B	X04Z
	Prä	B61B B61C B61D
78.16.10↔		BORP EML MBOR VAC VAC I VAC II VBOR
	04	E02A E02B E02C E36A E36B
	05	F21A F21B F21C
	06	G12A G12B G16A G38A G38B
	08	I02A I02B I02C I12A I12B I12C I18A I18B I18C I30A I30B I30C
	09	J11A J11B
	10	K09A K09B
	21B	X04Z

PROC

PROC

CHOP	MDC	DRG
	Prä	B61B B61C B61D
78.16.11↔		BORP EML MBOR VAC VAC I VAC II VBOR
	04	E02A E02B E02C E36A E36B
	05	F21A F21B F21C
	06	G12A G12B G16A G38A G38B
	08	I02A I02B I02C I12A I12B I12C I18A I18B I18C I30A I30B I30C
	09	J11A J11B
	10	K09A K09B
	21B	X04Z
	Prä	B61B B61C B61D
78.16.99↔		EML
	04	E02A E02B E02C
	05	F21A F21B F21C
	06	G12A G12B
	08	I18A I18B I18C I30A I30B I30C
	09	J11A J11B
	10	K09A K09B
	21B	X04Z
78.17.10↔		BORP EML MBOR VAC VAC I VAC II VBOR
	04	E02A E02B E02C E36A E36B
	05	F21A F21B F21C
	06	G12A G12B G16A G38A G38B
	08	I02A I02B I02C I12A I12B I12C I13A I13B I13C I13D
	09	J11A J11B
	10	K09A K09B
	21B	X04Z
	Prä	B61B B61C B61D
78.17.11↔		BORP EML MBOR VAC VAC I VAC II VBOR
	04	E02A E02B E02C E36A E36B
	05	F21A F21B F21C
	06	G12A G12B G16A G38A G38B
	08	I02A I02B I02C I12A I12B I12C I13A I13B I13C I13D
	09	J11A J11B
	10	K09A K09B
	21B	X04Z
	Prä	B61B B61C B61D
78.17.12↔		BORP EML MBOR VAC VAC I VAC II VBOR
	04	E02A E02B E02C E36A E36B
	05	F21A F21B F21C
	06	G12A G12B G16A G38A G38B
	08	I02A I02B I02C I12A I12B I12C I13A I13B I13C I13D
	09	J11A J11B
	10	K09A K09B
	21B	X04Z
	Prä	B61B B61C B61D
78.17.13↔		BORP EML MBOR VAC VAC I VAC II VBOR
	04	E02A E02B E02C E36A E36B
	05	F21A F21B F21C
	06	G12A G12B G16A G38A G38B
	08	I02A I02B I02C I12A I12B I12C I13A I13B I13C I13D
	09	J11A J11B
	10	K09A K09B
	21B	X04Z
	Prä	B61B B61C B61D
78.17.14↔		BORP EML MBOR VAC VAC I VAC II VBOR
	04	E02A E02B E02C E36A E36B
	05	F21A F21B F21C
	06	G12A G12B G16A G38A G38B
	08	I02A I02B I02C I12A I12B I12C I13A I13B I13C I13D
	09	J11A J11B
	10	K09A K09B
	21B	X04Z
	Prä	B61B B61C B61D
78.17.15↔		BORP EML MBOR VAC VAC I VAC II VBOR
	04	E02A E02B E02C E36A E36B
	05	F21A F21B F21C
	06	G12A G12B G16A G38A G38B
	08	I02A I02B I02C I12A I12B I12C I13A I13B I13C I13D
	09	J11A J11B
	10	K09A K09B
	21B	X04Z
	Prä	B61B B61C B61D
78.17.16↔		BORP EML MBOR VAC VAC I VAC II VBOR
	04	E02A E02B E02C E36A E36B
	05	F21A F21B F21C
	06	G12A G12B G16A G38A G38B
	08	I02A I02B I02C I12A I12B I12C I13A I13B I13C I13D
	09	J11A J11B
	10	K09A K09B
	21B	X04Z
	Prä	B61B B61C B61D
78.17.20↔		BORP EML MBOR VAC VAC I VAC II VBOR
	04	E02A E02B E02C E36A E36B
	05	F21A F21B F21C
	06	G12A G12B G16A G38A G38B
	08	I02A I02B I02C I12A I12B I12C I13A I13B I13C I13D
	09	J11A J11B
	10	K09A K09B
	21B	X04Z
	Prä	B61B B61C B61D
78.17.21↔		BORP EML MBOR VAC VAC I VAC II VBOR
	04	E02A E02B E02C E36A E36B
	05	F21A F21B F21C
	06	G12A G12B G16A G38A G38B
	08	I02A I02B I02C I12A I12B I12C I13A I13B I13C I13D
	09	J11A J11B
	10	K09A K09B
	21B	X04Z
	Prä	B61B B61C B61D
78.17.22↔		BORP EML MBOR VAC VAC I VAC II VBOR
	04	E02A E02B E02C E36A E36B
	05	F21A F21B F21C
	06	G12A G12B G16A G38A G38B
	08	I02A I02B I02C I12A I12B I12C I13A I13B I13C I13D
	09	J11A J11B
	10	K09A K09B
	21B	X04Z
	Prä	B61B B61C B61D
78.17.23↔		BORP EML MBOR VAC VAC I VAC II VBOR
	04	E02A E02B E02C E36A E36B
	05	F21A F21B F21C
	06	G12A G12B G16A G38A G38B
	08	I02A I02B I02C I12A I12B I12C I13A I13B I13C I13D
	09	J11A J11B
	10	K09A K09B
	21B	X04Z
	Prä	B61B B61C B61D
78.17.24↔		BORP EML MBOR VAC VAC I VAC II VBOR
	04	E02A E02B E02C E36A E36B
	05	F21A F21B F21C
	06	G12A G12B G16A G38A G38B

CHOP	MDC	DRG
	08	I02A I02B I02C I12A I12B I12C I13A I13B I13C I13D
	09	J11A J11B
	10	K09A K09B
	21B	X04Z
	Prä	B61B B61C B61D
78.17.25↔		BORP EML MBOR VAC VAC I VAC II VBOR
	04	E02A E02B E02C E36A E36B
	05	F21A F21B F21C
	06	G12A G12B G16A G38A G38B
	08	I02A I02B I02C I12A I12B I12C I13A I13B I13C I13D
	09	J11A J11B
	10	K09A K09B
	21B	X04Z
	Prä	B61B B61C B61D
78.17.26↔		BORP EML MBOR VAC VAC I VAC II VBOR
	04	E02A E02B E02C E36A E36B
	05	F21A F21B F21C
	06	G12A G12B G16A G38A G38B
	08	I02A I02B I02C I12A I12B I12C I13A I13B I13C I13D
	09	J11A J11B
	10	K09A K09B
	21B	X04Z
	Prä	B61B B61C B61D
78.17.27↔		BORP EML MBOR VAC VAC I VAC II VBOR
	04	E02A E02B E02C E36A E36B
	05	F21A F21B F21C
	06	G12A G12B G16A G38A G38B
	08	I02A I02B I02C I12A I12B I12C I13A I13B I13C I13D
	09	J11A J11B
	10	K09A K09B
	21B	X04Z
	Prä	B61B B61C B61D
78.17.99↔		BORP EML MBOR VAC VAC I VAC II VBOR
	04	E02A E02B E02C E36A E36B
	05	F21A F21B F21C
	06	G12A G12B G16A G38A G38B
	08	I02A I02B I02C I12A I12B I12C I13A I13B I13C I13D
	09	J11A J11B
	10	K09A K09B

CHOP	MDC	DRG
	21B	X04Z
	Prä	B61B B61C B61D
78.18.10↔		EML
	04	E02A E02B E02C
	05	F21A F21B F21C
	06	G12A G12B
	08	I02A I02B I02C I12A I12B I12C I20A I20B I20C I20D I20G
	09	J11A J11B
	10	K09A K09B
	21B	X04Z
	Prä	B61B B61C B61D
78.18.11↔		BORP EML MBOR VAC VAC I VAC II VBOR
	04	E02A E02B E02C E36A E36B
	05	F21A F21B F21C
	06	G12A G12B G16A G38A G38B
	08	I02A I02B I02C I12A I12B I12C I20A I20B I20C I20D I20E I20F I20G
	09	J11A J11B
	10	K09A K09B
	21B	X04Z
	Prä	B61B B61C B61D
78.18.12↔		BORP EML MBOR VAC VAC I VAC II VBOR
	04	E02A E02B E02C E36A E36B
	05	F21A F21B F21C
	06	G12A G12B G16A G38A G38B
	08	I02A I02B I02C I12A I12B I12C I20A I20B I20C I20D I20E I20F I20G
	09	J11A J11B
	10	K09A K09B
	21B	X04Z
	Prä	B61B B61C B61D
78.18.13↔		BORP EML MBOR VAC VAC I VAC II VBOR
	04	E02A E02B E02C E36A E36B
	05	F21A F21B F21C
	06	G12A G12B G16A G38A G38B
	08	I02A I02B I02C I12A I12B I12C I20A I20B I20C I20D I20G
	09	J11A J11B
	10	K09A K09B
	21B	X04Z
	Prä	B61B B61C B61D
78.18.14↔		BORP EML MBOR VAC VAC I VAC II VBOR
	04	E02A E02B E02C E36A E36B
	05	F21A F21B F21C

CHOP	MDC	DRG
	06	G12A G12B G16A G38A G38B
	08	I02A I02B I02C I12A I12B I12C I20A I20B I20C I20D I20E I20F I20G
	09	J11A J11B
	10	K09A K09B
	21B	X04Z
	Prä	B61B B61C B61D
78.18.15↔		BORP EML MBOR VAC VAC I VAC II VBOR
	04	E02A E02B E02C E36A E36B
	05	F21A F21B F21C
	06	G12A G12B G16A G38A G38B
	08	I02A I02B I02C I12A I12B I12C I20A I20B I20C I20D I20E I20F I20G
	09	J11A J11B
	10	K09A K09B
	21B	X04Z
	Prä	B61B B61C B61D
78.18.99↔		BORP EML MBOR VAC VAC I VAC II VBOR
	04	E02A E02B E02C E36A E36B
	05	F21A F21B F21C
	06	G12A G12B G16A G38A G38B
	08	I02A I02B I02C I12A I12B I12C I20A I20B I20C I20D I20E I20F I20G
	09	J11A J11B
	10	K09A K09B
	21B	X04Z
	Prä	B61B B61C B61D
78.19.10↔		BORP EML MBOR VAC VAC I VAC II VBOR
	04	E02A E02B E02C E36A E36B
	05	F21A F21B F21C
	06	G12A G12B G16A G38A G38B
	08	I02A I02B I02C I12A I12B I12C I32A I32B I32C I32D I32E I32F
	09	J11A J11B
	10	K09A K09B
	21B	X05Z
	Prä	B61B B61C B61D
78.19.11↔		BORP EML MBOR VAC VAC I VAC II VBOR
	04	E02A E02B E02C E36A E36B
	05	F21A F21B F21C
	06	G12A G12B G16A G38A G38B
	08	I02A I02B I02C

PROC

PROC

CHOP	MDC	DRG
		I12A I12B I12C I32A I32B I32C I32D I32E I32F
	09	J11A J11B
	10	K09A K09B
	21B	X05Z
	Prä	B61B B61C B61D
78.19.20↔		BORP EML MBOR VAC VAC I VAC II VBOR
	04	E02A E02B E02C E36A E36B
	05	F21A F21B F21C
	06	G12A G12B G16A G38A G38B
	08	I02A I02B I02C I08A I08B I08C
	09	J11A J11B
	10	K09A K09B
	21B	X06A X06B X06C
78.19.21↔		BORP EML MBOR VAC VAC I VAC II VBOR
	04	E02A E02B E02C E36A E36B
	05	F21A F21B F21C
	06	G12A G12B G16A G38A G38B
	08	I02A I02B I02C I08A I08B I08C
	09	J11A J11B
	10	K09A K09B
	21B	X06A X06B X06C
78.19.22↔		BORP EML MBOR VAC VAC I VAC II VBOR
	04	E02A E02B E02C E36A E36B
	05	F21A F21B F21C
	06	G12A G12B G16A G38A G38B
	08	I02A I02B I02C I08A I08B I08C
	09	J11A J11B
	10	K09A K09B
	21B	X06A X06B X06C
78.19.30↔		BORP EML MBOR VAC VAC I VAC II VBOR
	04	E02A E02B E02C E36A E36B
	05	F21A F21B F21C
	06	G12A G12B G16A G38A G38B
	08	I02A I02B I02C I12A I12B I12C I20A I20B I20C I20D I20E I20F I20G
	09	J11A J11B
	10	K09A K09B
	21B	X04Z
	Prä	B61B B61C B61D
78.19.31↔		BORP EML MBOR VAC VAC I VAC II VBOR
	04	E02A E02B E02C E36A E36B
	05	F21A F21B F21C
	06	G12A G12B G16A G38A G38B
	08	I02A I02B I02C I12A I12B I12C I20A I20B I20C I20D I20E I20F I20G
	09	J11A J11B
	10	K09A K09B
	21B	X04Z
	Prä	B61B B61C B61D
78.19.90↔		BORP MBOR VAC VAC I VAC II VBOR
	03	D25A D25B D28Z D29Z
	04	E02A E02B E02C E36A E36B
	06	G12A G16A G38A G38B
	08	I02A I02B I02C I12A I12B I12C I28A I28B
	09	J02A J02B J08Z
	21B	X04Z X05Z X06A X06B X06C
	Prä	B61B B61C B61D
78.19.91↔		BORP MBOR VAC VAC I VAC II VBOR
	03	D25A D25B D28Z D29Z
	04	E02A E02B E02C E36A E36B
	06	G12A G16A G38A G38B
	08	I02A I02B I02C I12A I12B I12C I28A I28B
	09	J02A J02B J08Z
	21B	X04Z X05Z X06A X06B X06C
	Prä	B61B B61C B61D
78.19.99↔		BORP MBOR VAC VAC I VAC II VBOR
	03	D28Z
	04	E02A E02B E02C E36A E36B
	06	G12A G16A G38A G38B
	08	I02A I02B I02C I12A I12B I12C I28A I28B
	09	J02A J02B J08Z
	21B	X04Z X05Z X06A X06B X06C
	Prä	B61B B61C B61D
78.21.00↔		BORP EML MBOR VAC VAC I VAC II VBOR
	04	E36A E36B
	06	G12A G16A G38A G38B
	08	I29A I29B I29C
	21B	X06A X06B X06C
78.21.10↔		BORP EML MBOR VAC VAC I VAC II VBOR
	04	E36A E36B
	06	G12A G16A G38A G38B
	08	I29A I29B I29C
	21B	X06A X06B X06C
78.21.11↔		BORP EML MBOR VAC VAC I VAC II VBOR
	04	E36A E36B
	06	G12A G16A G38A G38B
	08	I29A I29B I29C
	21B	X06A X06B X06C
78.21.12↔		BORP EML MBOR VAC VAC I VAC II VBOR
	04	E36A E36B
	06	G12A G16A G38A G38B
	08	I29A I29B I29C
	21B	X06A X06B X06C
78.21.99↔		BORP EML MBOR VAC VAC I VAC II VBOR
	04	E36A E36B
	06	G12A G16A G38A G38B
	08	I29A I29B I29C
	21B	X06A X06B X06C
78.22.00↔		BORP EML MBOR VAC VAC I VAC II VBOR
	04	E36A E36B
	06	G12A G16A G38A G38B
	08	I02A I02B I02C I08B I11Z I12A I12B I12C I13A I13B I13C I13D
	21B	X06A X06B X06C
	Prä	B61B B61C B61D
78.22.10↔		BORP EML MBOR VAC VAC I VAC II VBOR
	04	E36A E36B
	06	G12A G16A G38A G38B
	08	I02A I02B I02C I08B I11Z I12A I12B I12C I13A I13B I13C I13D
	21B	X06A X06B X06C
	Prä	B61B B61C B61D
78.22.11↔		BORP EML MBOR VAC VAC I VAC II VBOR
	04	E36A E36B
	06	G12A G16A G38A G38B
	08	I02A I02B I02C I08B I11Z I12A I12B I12C I13A I13B I13C I13D
	21B	X06A X06B X06C
	Prä	B61B B61C B61D
78.22.12↔		BORP EML MBOR VAC VAC I VAC II VBOR
	04	E36A E36B
	06	G12A G16A G38A G38B
	08	I02A I02B I02C I08B I11Z I12A I12B I12C I13A I13B I13C I13D

CHOP	MDC	DRG
	21B	X06A X06B X06C
	Prä	B61B B61C B61D
78.22.99↔		BORP EML MBOR VAC VAC I VAC II VBOR
	04	E36A E36B
	06	G12A G16A G38A G38B
	08	I02A I02B I02C I08B I11Z I12A I12B I12C I13A I13B I13C I13D
	21B	X06A X06B X06C
	Prä	B61B B61C B61D
78.23.00↔		BORP EML MBOR VAC VAC I VAC II VBOR
	04	E36A E36B
	06	G12A G16A G38A G38B
	08	I02A I02B I02C I08B I11Z I12A I12B I12C I13A I31A I31B
	21B	X06A X06B X06C
	Prä	B61B B61C B61D
78.23.10↔		BORP EML MBOR VAC VAC I VAC II VBOR
	04	E36A E36B
	06	G12A G16A G38A G38B
	08	I02A I02B I02C I08B I11Z I12A I12B I12C I13A I31A I31B
	21B	X06A X06B X06C
	Prä	B61B B61C B61D
78.23.11↔		BORP EML MBOR VAC VAC I VAC II VBOR
	04	E36A E36B
	06	G12A G16A G38A G38B
	08	I02A I02B I02C I08B I11Z I12A I12B I12C I13A I31A I31B
	21B	X06A X06B X06C
	Prä	B61B B61C B61D
78.23.12↔		BORP EML MBOR VAC VAC I VAC II VBOR
	04	E36A E36B
	06	G12A G16A G38A G38B
	08	I02A I02B I02C I08B I11Z I12A I12B I12C I13A I31A I31B
	21B	X06A X06B X06C
	Prä	B61B B61C B61D
78.23.99↔		BORP EML MBOR VAC VAC I VAC II VBOR
	04	E36A E36B
	06	G12A G16A G38A G38B
	08	I02A I02B I02C I08B I11Z I12A I12B I12C I13A I31A I31B
	21B	X06A X06B X06C
	Prä	B61B B61C B61D
78.24.10↔		BORP EML MBOR VAC VAC I VAC II VBOR
	04	E36A E36B
	06	G12A G16A G38A G38B
	08	I02A I02B I02C I08B I11Z I13A I32A I32B I32C I32D I32E I32F
	21B	X05Z
78.24.11↔		BORP EML MBOR VAC VAC I VAC II VBOR
	04	E36A E36B
	06	G12A G16A G38A G38B
	08	I02A I02B I02C I08B I11Z I13A I32A I32B I32C I32D I32E I32F
	21B	X05Z
78.24.12↔		BORP EML MBOR VAC VAC I VAC II VBOR
	04	E36A E36B
	06	G12A G16A G38A G38B
	08	I02A I02B I02C I08B I11Z I13A I32A I32B I32C I32D I32E I32F
	21B	X05Z
78.24.99↔		BORP EML MBOR VAC VAC I VAC II VBOR
	04	E36A E36B
	06	G12A G16A G38A G38B
	08	I02A I02B I02C I08B I11Z I13A I32A I32B I32C I32D I32E I32F
	21B	X05Z
78.25.00↔		BORP EML MBOR VAC VAC I VAC II VBOR
	01	B03A B03B B03C
	04	E36A E36B
	06	G12A G16A G38A G38B
	08	I02A I02B I02C I08A I08B I08C I11Z I13A
	21B	X04Z
78.25.10↔		BORP EML MBOR VAC VAC I VAC II VBOR
	01	B03A B03B B03C
	04	E36A E36B
	06	G12A G16A G38A G38B
	08	I02A I02B I02C I08A I08B I08C I11Z I13A
	21B	X04Z
78.25.11↔		BORP EML MBOR VAC VAC I VAC II VBOR
	01	B03A B03B B03C
	04	E36A E36B
	06	G12A G16A G38A G38B
	08	I02A I02B I02C I08A I08B I08C I11Z I13A
	21B	X04Z
78.25.12↔		BORP EML MBOR VAC VAC I VAC II VBOR
	01	B03A B03B B03C
	04	E36A E36B
	06	G12A G16A G38A G38B
	08	I02A I02B I02C I08A I08B I08C I11Z I13A
	21B	X04Z
78.25.19↔		BORP EML MBOR VAC VAC I VAC II VBOR
	01	B03A B03B B03C
	04	E36A E36B
	06	G12A G16A G38A G38B
	08	I02A I02B I02C I08A I08B I08C I11Z I13A
	21B	X04Z
78.25.20↔		BORP EML MBOR VAC VAC I VAC II VBOR
	01	B03A B03B B03C
	04	E36A E36B
	06	G12A G16A G38A G38B
	08	I02A I02B I02C I08A I08B I08C I11Z I13A
	21B	X04Z
78.25.21↔		BORP EML MBOR VAC VAC I VAC II VBOR
	01	B03A B03B B03C
	04	E36A E36B
	06	G12A G16A G38A G38B
	08	I02A I02B I02C I08A I08B I08C I11Z I13A
	21B	X04Z
78.25.22↔		BORP EML MBOR VAC VAC I VAC II VBOR
	01	B03A B03B B03C
	04	E36A E36B
	06	G12A G16A G38A G38B
	08	I02A I02B I02C I08A I08B I08C I11Z I13A
	21B	X04Z
78.25.99↔		BORP EML MBOR VAC VAC I VAC II VBOR
	01	B03A B03B B03C

PROC

PROC

CHOP	MDC	DRG
	04	E36A E36B
	06	G12A G16A G38A G38B
	08	I02A I02B I02C I08A I08B I08C I11Z I13A
	21B	X04Z
78.27.00↔		BORP EML MBOR VAC VAC I VAC II VBOR
	04	E36A E36B
	06	G12A G16A G38A G38B
	08	I08B I11Z I13A I13B I13C I13D
	21B	X04Z
78.27.10↔		BORP EML MBOR VAC VAC I VAC II VBOR
	04	E36A E36B
	06	G12A G16A G38A G38B
	08	I08B I11Z I13A I13B I13C I13D
	21B	X04Z
78.27.11↔		BORP EML MBOR VAC VAC I VAC II VBOR
	04	E36A E36B
	06	G12A G16A G38A G38B
	08	I08B I11Z I13A I13B I13C I13D
	21B	X04Z
78.27.12↔		BORP EML MBOR VAC VAC I VAC II VBOR
	04	E36A E36B
	06	G12A G16A G38A G38B
	08	I08B I11Z I13A I13B I13C I13D
	21B	X04Z
78.27.19↔		BORP EML MBOR VAC VAC I VAC II VBOR
	04	E36A E36B
	06	G12A G16A G38A G38B
	08	I08B I11Z I13A I13B I13C I13D
	21B	X04Z
78.27.20↔		BORP EML MBOR VAC VAC I VAC II VBOR
	04	E36A E36B
	06	G12A G16A G38A G38B
	08	I08B I11Z I13A I13B I13C I13D
	21B	X04Z
78.27.21↔		BORP EML MBOR VAC VAC I VAC II VBOR
	04	E36A E36B
	06	G12A G16A G38A G38B
	08	I08B I11Z I13A I13B I13C I13D
	21B	X04Z
78.27.22↔		BORP EML MBOR VAC VAC I VAC II VBOR
	04	E36A E36B
	06	G12A G16A G38A G38B
	08	I08B I11Z I13A I13B I13C I13D
	21B	X04Z
78.27.29↔		BORP EML MBOR VAC VAC I VAC II VBOR
	04	E36A E36B
	06	G12A G16A G38A G38B
	08	I08B I11Z I13A I13B I13C I13D
	21B	X04Z
78.27.99↔		BORP EML MBOR VAC VAC I VAC II VBOR
	04	E36A E36B
	06	G12A G16A G38A G38B
	08	I08B I11Z I13A I13B I13C I13D
	21B	X04Z
78.28.10↔		BORP EML MBOR VAC VAC I VAC II VBOR
	04	E36A E36B
	05	F04Z F13A F13B F13C
	06	G12A G16A G38A G38B
	08	I08B I11Z I13A I20A I20B I20C I20D I20E I20F I20G
	21B	X04Z
78.28.11↔		BORP EML MBOR VAC VAC I VAC II VBOR
	04	E36A E36B
	05	F04Z F13A F13B F13C
	06	G12A G16A G38A G38B
	08	I08B I11Z I13A I20A I20B I20C I20D I20E I20F I20G
	21B	X04Z
78.28.12↔		BORP EML MBOR VAC VAC I VAC II VBOR
	04	E36A E36B
	05	F04Z F13A F13B F13C
	06	G12A G16A G38A G38B
	08	I08B I11Z I13A I20A I20B I20C I20D I20E I20F I20G
	21B	X04Z
78.28.20↔		BORP EML MBOR VAC VAC I VAC II VBOR
	04	E36A E36B
	05	F04Z F13A F13B F13C
	06	G12A G16A G38A G38B
	08	I08B I11Z I13A I20A I20B I20C I20D I20E I20F I20G
	21B	X04Z
78.28.21↔		BORP EML MBOR VAC VAC I VAC II VBOR
	04	E36A E36B
	05	F04Z F13A F13B F13C
	06	G12A G16A G38A G38B
	08	I08B I11Z I13A I20A I20B I20C I20D I20E I20F I20G
	21B	X04Z
78.28.22↔		BORP EML MBOR VAC VAC I VAC II VBOR
	04	E36A E36B
	05	F04Z F13A F13B F13C
	06	G12A G16A G38A G38B
	08	I08B I11Z I13A I20A I20B I20C I20D I20E I20F I20G
	21B	X04Z
78.28.99↔		BORP EML MBOR VAC VAC I VAC II VBOR
	04	E36A E36B
	05	F04Z F13A F13B F13C
	06	G12A G16A G38A G38B
	08	I08B I11Z I13A I20A I20B I20C I20D I20E I20F I20G
	21B	X04Z
78.29.00↔	08	I28A I28B I28C
	21B	X06A X06B X06C
78.29.10↔		BORP EML MBOR VAC VAC I VAC II VBOR
	04	E36A E36B
	05	F04Z F13A F13B F13C
	06	G12A G16A G38A G38B
	08	I02A I02B I02C I08B I11Z I13A I32A I32B I32C I32D I32E I32F
	21B	X06A X06B X06C
78.29.11↔		BORP EML MBOR VAC VAC I VAC II VBOR
	04	E36A E36B
	05	F04Z F13A F13B F13C
	06	G12A G16A G38A

CHOP	MDC	DRG
		G38B
	08	I02A I02B I02C I08B I11Z I13A I32A I32B I32C I32D I32E I32F
	21B	X06A X06B X06C
78.29.12↔		BORP EML MBOR VAC VAC I VAC II VBOR
	04	E36A E36B
	05	F04Z F13A F13B F13C
	06	G12A G16A G38A G38B
	08	I02A I02B I02C I08B I11Z I13A I32A I32B I32C I32D I32E I32F
	21B	X06A X06B X06C
78.29.19↔		BORP EML MBOR VAC VAC I VAC II VBOR
	04	E36A E36B
	05	F04Z F13A F13B F13C
	06	G12A G16A G38A G38B
	08	I02A I02B I02C I08B I11Z I13A I32A I32B I32C I32D I32E I32F
	21B	X06A X06B X06C
78.29.30↔		BORP EML MBOR VAC VAC I VAC II VBOR
	04	E36A E36B
	06	G12A G16A G38A G38B
	08	I21A I21B
	21B	X06A X06B X06C
78.29.31↔		BORP EML MBOR VAC VAC I VAC II VBOR
	04	E36A E36B
	06	G12A G16A G38A G38B
	08	I21A I21B
	21B	X06A X06B X06C
78.29.32↔		BORP EML MBOR VAC VAC I VAC II VBOR
	04	E36A E36B
	06	G12A G16A G38A G38B
	08	I21A I21B
	21B	X06A X06B X06C
78.29.39↔		BORP EML MBOR VAC VAC I VAC II VBOR
	04	E36A E36B
	06	G12A G16A G38A G38B
	08	I21A I21B
	21B	X06A X06B X06C
78.29.40↔		BORP EML MBOR VAC VAC I VAC II VBOR
	04	E36A E36B
	05	F04Z F13A F13B F13C
	06	G12A G16A G38A G38B
	08	I08B I11Z I13A I20A I20B I20C I20D I20G
	21B	X04Z
78.29.41↔		BORP EML MBOR VAC VAC I VAC II VBOR
	04	E36A E36B
	05	F04Z F13A F13B F13C
	06	G12A G16A G38A G38B
	08	I08B I11Z I13A I20A I20B I20C I20D I20G
	21B	X04Z
78.29.42↔		BORP EML MBOR VAC VAC I VAC II VBOR
	04	E36A E36B
	05	F04Z F13A F13B F13C
	06	G12A G16A G38A G38B
	08	I08B I11Z I13A I20A I20B I20C I20D I20G
	21B	X04Z
78.29.49↔		BORP EML MBOR VAC VAC I VAC II VBOR
	04	E36A E36B
	05	F04Z F13A F13B F13C
	06	G12A G16A G38A G38B
	08	I08B I11Z I13A I20A I20B I20C I20D I20G
	21B	X04Z
78.29.90↔	08	I28A I28B I28C
	21B	X06A X06B X06C
78.29.91↔	08	I28A I28B I28C
	21B	X06A X06B X06C
78.29.92↔	08	I28A I28B I28C
	21B	X06A X06B X06C
78.30↔		BORP MBOR VAC VAC I VAC II VBOR
	01	B03A B03B B03C
	04	E36A E36B
	06	G12A G16A G38A G38B
	08	I08B I11Z I13A I28A I28B
	21B	X06A X06B X06C
78.31↔		BORP EML MBOR VAC VAC I VAC II VBOR
	04	E36A E36B
	06	G12A G16A G38A G38B
	08	I02A I02B I02C I08A I08B I11Z I13A I29A I29B I29C
	21B	X06A X06B X06C
78.32↔		BORP EML MBOR VAC VAC I VAC II VBOR
	04	E36A E36B
	06	G12A G16A G38A G38B
	08	I08B I11Z I13A
	21B	X06A X06B X06C
78.33↔		BORP EML MBOR VAC VAC I VAC II VBOR
	04	E36A E36B
	06	G12A G16A G38A G38B
	08	I08B I11Z I13A
	21B	X06A X06B X06C
78.34↔		BORP EML MBOR VAC VAC I VAC II VBOR
	04	E36A E36B
	06	G12A G16A G38A G38B
	08	I02A I02B I02C I08B I11Z I13A I32A I32B I32C I32D I32E I32F
	21B	X05Z
78.35.00↔		BORP EML MBOR VAC VAC I VAC II VBOR
	01	B03A B03B B03C
	04	E36A E36B
	06	G12A G16A G38A G38B
	08	I02A I02B I02C I08A I08B I11Z I13A
	21B	X04Z
78.35.10↔		BORP EML MBOR VAC VAC I VAC II VBOR
	01	B03A B03B B03C
	04	E36A E36B
	06	G12A G16A G38A G38B
	08	I02A I02B I02C I08A I08B I11Z I13A
	21B	X04Z
78.35.19↔		BORP EML MBOR VAC VAC I VAC II VBOR
	01	B03A B03B B03C
	04	E36A E36B
	06	G12A G16A G38A G38B
	08	I02A I02B I02C I08A I08B I11Z I13A
	21B	X04Z
78.35.99↔		BORP EML MBOR VAC VAC I VAC II VBOR
	01	B03A B03B B03C
	04	E36A E36B
	06	G12A G16A G38A G38B
	08	I02A I02B I02C I08A I08B I11Z I13A
	21B	X04Z
78.37↔		BORP EML MBOR

PROC

PROC

CHOP	MDC	DRG
		VAC VAC I VAC II VBOR
	04	E36A E36B
	06	G12A G16A G38A G38B
	08	I08B I11Z I13A
	21B	X04Z
78.38.10↔		BORP EML MBOR VAC VAC I VAC II VBOR
	04	E36A E36B
	05	F04Z F13A F13B F13C
	06	G12A G16A G38A G38B
	08	I08B I11Z I13A I20A I20B I20C I20D I20G
	21B	X04Z
78.38.19↔		BORP EML MBOR VAC VAC I VAC II VBOR
	04	E36A E36B
	05	F04Z F13A F13B F13C
	06	G12A G16A G38A G38B
	08	I08B I11Z I13A I20A I20B I20C I20D I20G
	21B	X04Z
78.38.20↔		BORP EML MBOR VAC VAC I VAC II VBOR
	04	E36A E36B
	05	F04Z F13A F13B F13C
	06	G12A G16A G38A G38B
	08	I08B I11Z I13A I20A I20B I20C I20D I20G
	21B	X04Z
78.38.99↔		BORP EML MBOR VAC VAC I VAC II VBOR
	04	E36A E36B
	05	F04Z F13A F13B F13C
	06	G12A G16A G38A G38B
	08	I08B I11Z I13A I20A I20B I20C I20D I20G
	21B	X04Z
78.39.10↔		BORP EML MBOR VAC VAC I VAC II VBOR
	01	B03A B03B B03C
	04	E36A E36B
	06	G12A G16A G38A G38B
	08	I02A I02B I02C I08A I08B I11Z I13A I32A I32B I32C I32D I32E I32F
	21B	X05Z
78.39.20↔		BORP EML MBOR VAC VAC I VAC II VBOR
	01	B03A B03B B03C
	04	E36A E36B
	06	G12A G16A G38A G38B
	08	I02A I02B I02C I08A I08B I08C
	21B	X04Z X06A X06B X06C
78.39.30↔		BORP EML MBOR VAC VAC I VAC II VBOR
	01	B03A B03B B03C
	04	E36A E36B
	06	G12A G16A G38A G38B
	08	I08B I11Z I13A I20A I20B I20C I20D I20E I20F I20G
	21B	X04Z
78.39.99↔		BORP MBOR VAC VAC I VAC II VBOR
	01	B03A B03B B03C
	04	E36A E36B
	06	G12A G16A G38A G38B
	08	I02A I02B I02C I08A I08B I08C I11Z I13A I28A I28B
	21B	X05Z X06A X06B X06C
78.41.00↔		BORP EML MBOR VAC VAC I VAC II VBOR
	04	E36A E36B
	06	G12A G16A G38A G38B
	08	I08B I11Z I13A I29A I29B I29C
	21B	X06A X06B
78.41.10↔		BORP EML MBOR VAC VAC I VAC II VBOR
	04	E36A E36B
	06	G12A G16A G38A G38B
	08	I08B I11Z I13A I29A I29B I29C
	21B	X06A X06B
78.41.20↔		BORP EML MBOR VAC VAC I VAC II VBOR
	01	B03A B03B B03C
	04	E02A E02B E02C E36A E36B
	06	G12A G16A G38A G38B
	08	I08B I11Z I13A I29A I29B I29C
	21B	X06A X06B X06C
78.41.30↔		BORP EML KORP MBOR MKOR VAC VAC I VAC II VBOR VKOR
	01	B03A B03B B03C
	04	E02A E02B E02C E36A E36B
	06	G12A G16A G33Z G38A G38B G38C
	07	H33Z
	08	I02A I02B I02C I06A I06B I09A I09B I09C I09D I09E
	09	J01A J01B
	11	L33Z
	21A	W01A W01B W01C
	21B	X06A X06B X07A X07B
	Prä	B61A B61B B61C
78.41.99↔		BORP EML MBOR VAC VAC I VAC II VBOR
	04	E36A E36B
	06	G12A G16A G38A G38B
	08	I29A I29B I29C
	21B	X06A X06B X06C
78.42↔		BORP EML MBOR VAC VAC I VAC II VBOR
	04	E36A E36B
	06	G12A G16A G38A G38B
	08	I08B I11Z I13A I13B I13C I13D
	21B	X06A X06B X06C
78.43↔		BORP EML MBOR VAC VAC I VAC II VBOR
	04	E36A E36B
	06	G12A G16A G38A G38B
	08	I08B I11Z I13A I31A I31B
	21B	X06A X06B X06C
78.44↔		BORP EML MBOR VAC VAC I VAC II VBOR
	04	E36A E36B
	06	G12A G16A G38A G38B
	08	I02A I02B I02C I08B I11Z I13A I32A I32B I32C I32D I32E I32F
	21B	X05Z
78.45↔		BORP EML MBOR VAC VAC I VAC II VBOR
	01	B03A B03B B03C
	04	E36A E36B
	06	G12A G16A G38A G38B
	08	I02A I02B I02C I08A I08B I08C I11Z I13A
	21B	X04Z
78.47.00↔		BORP EML MBOR VAC VAC I VAC II VBOR
	04	E36A E36B
	06	G12A G16A G38A G38B
	08	I08B I11Z I13A I13B I13C I13D
	21B	X04Z
78.47.10↔		BORP EML MBOR

CHOP	MDC	DRG
		VAC VAC I VAC II VBOR
	04	E36A E36B
	06	G12A G16A G38A G38B
	08	I08B I11Z I13A I13B I13C I13D
	21B	X04Z
78.47.20↔		BORP EML MBOR VAC VAC I VAC II VBOR
	04	E36A E36B
	06	G12A G16A G38A G38B
	08	I08B I11Z I13A I13B I13C I13D
	21B	X04Z
78.47.99↔		BORP EML MBOR VAC VAC I VAC II VBOR
	04	E36A E36B
	06	G12A G16A G38A G38B
	08	I08B I11Z I13A I13B I13C I13D
	21B	X04Z
78.48↔		BORP EML MBOR VAC VAC I VAC II VBOR
	04	E36A E36B
	05	F04Z F13A F13B F13C
	06	G12A G16A G38A G38B
	08	I08B I11Z I13A I20A I20B I20C I20D I20E I20F I20G
	21B	X04Z
78.49.00↔	08	I10A I10B I10C
	21A	W01A W01B W01C
78.49.09↔	08	I10A I10B I10C
	21A	W01A W01B W01C
78.49.11↔		EML
	05	F04Z F13A F13B F13C
	08	I02A I02B I02C I08B I11Z I13A I32A I32B I32C I32E I32F
	21B	X05Z
78.49.12↔		BORP EML MBOR VAC VAC I VAC II VBOR
	04	E36A E36B
	05	F04Z F13A F13B F13C
	06	G12A G16A G38A G38B
	08	I08B I11Z I13A I21A I21B
	21B	X04Z
78.49.13↔		BORP EML MBOR VAC VAC I VAC II VBOR
	04	E36A E36B
	05	F04Z F13A F13B F13C
	06	G12A G16A G38A G38B
	08	I08B I11Z I13A I20A I20B I20C I20D I20G I32C
	21B	X04Z
78.49.19↔	08	I28A I28B
	21B	X06A X06B X06C
78.51.00↔		BORP EML MBOR VAC VAC I VAC II VBOR
	04	E02A E02B E02C E36A E36B
	06	G12A G16A G38A G38B
	08	I02A I02B I02C I12A I12B I12C I59Z
	21B	X06A X06B X06C
	Prä	B61B B61C B61D
78.51.10↔	04	E02A E02B E02C
	08	I28A I28B I28C
	21B	X06A X06B X06C
78.51.99↔		BORP EML MBOR VAC VAC I VAC II VBOR
	04	E02A E02B E02C E36A E36B
	06	G12A G16A G38A G38B
	08	I02A I02B I02C I12A I12B I12C I59Z
	21B	X06A X06B X06C
	Prä	B61B B61C B61D
78.52.00↔		BORP EML MBOR VAC VAC I VAC II VBOR
	04	E36A E36B
	06	G12A G16A G38A G38B
	08	I02A I02B I02C I12A I12B I12C I13A I13B I13C I13D
	21B	X05Z X06A X06B X06C
	Prä	B61B B61C B61D
78.52.10↔		BORP EML MBOR VAC VAC I VAC II VBOR
	04	E36A E36B
	06	G12A G16A G38A G38B
	08	I02A I02B I02C I12A I12B I12C I13A I13B I13C I13D
	21B	X05Z X06A X06B X06C
	Prä	B61B B61C B61D
78.52.99↔		BORP EML MBOR VAC VAC I VAC II VBOR
	04	E36A E36B
	06	G12A G16A G38A G38B
	08	I02A I02B I02C I12A I12B I12C I13A I13B I13C I13D
	21B	X05Z X06A X06B X06C
	Prä	B61B B61C B61D
78.53.00↔		BORP EML MBOR VAC VAC I VAC II VBOR
	04	E36A E36B
	06	G12A G16A G38A G38B
	08	I02A I02B I02C I12A I12B I12C I31A I31B
	21B	X05Z X06A X06B X06C
	Prä	B61B B61C B61D
78.53.10↔		BORP EML MBOR VAC VAC I VAC II VBOR
	04	E36A E36B
	06	G12A G16A G38A G38B
	08	I02A I02B I02C I12A I12B I12C I31A I31B
	21B	X05Z X06A X06B X06C
	Prä	B61B B61C B61D
78.53.20↔		BORP EML MBOR VAC VAC I VAC II VBOR
	04	E36A E36B
	06	G12A G16A G38A G38B
	08	I02A I02B I02C I12A I12B I12C I31A I31B
	21B	X05Z X06A X06B X06C
	Prä	B61B B61C B61D
78.53.99↔		BORP EML MBOR VAC VAC I VAC II VBOR
	04	E36A E36B
	06	G12A G16A G38A G38B
	08	I02A I02B I02C I12A I12B I12C I31A I31B
	21B	X05Z X06A X06B X06C
	Prä	B61B B61C B61D
78.54.00↔		BORP EML MBOR VAC VAC I VAC II VBOR
	04	E36A E36B
	06	G12A G16A G38A G38B
	08	I02A I02B I02C I12A I12B I12C I32A I32B I32C I32D I32E I32F
	21B	X05Z
	Prä	B61B B61C B61D
78.54.10↔		BORP EML MBOR VAC VAC I VAC II VBOR
	04	E36A E36B
	06	G12A G16A G38A G38B
	08	I02A I02B I02C I12A I12B I12C

PROC

PROC

CHOP	MDC	DRG
		I32A I32B I32C I32D I32E I32F
	21B	X05Z
	Prä	B61B B61C B61D
78.54.99↔		BORP EML MBOR VAC VAC I VAC II VBOR
	04	E36A E36B
	06	G12A G16A G38A G38B
	08	I02A I02B I02C I12A I12B I12C I32A I32B I32C I32D I32E I32F
	21B	X05Z
	Prä	B61B B61C B61D
78.55.00↔		BORP EML MBOR VAC VAC I VAC II VBOR
	04	E36A E36B
	06	G12A G16A G38A G38B
	08	I02A I02B I02C I08A I08B I08C I12A I12B I12C
	21B	X04Z
	Prä	B61B B61C B61D
78.55.10↔		BORP EML MBOR VAC VAC I VAC II VBOR
	04	E36A E36B
	06	G12A G16A G38A G38B
	08	I02A I02B I02C I08A I08B I08C I12A I12B I12C
	21B	X04Z
	Prä	B61B B61C B61D
78.55.99↔		BORP EML MBOR VAC VAC I VAC II VBOR
	04	E36A E36B
	06	G12A G16A G38A G38B
	08	I02A I02B I02C I08A I08B I08C I12A I12B I12C
	21B	X04Z
	Prä	B61B B61C B61D
78.56.00↔		BORP EML MBOR VAC VAC I VAC II VBOR
	04	E36A E36B
	06	G12A G16A G38A G38B
	08	I02A I02B I02C I12A I12B I12C I18A I18B I18C I30A I30B I30C
	21B	X04Z
	Prä	B61B B61C B61D
78.56.10↔		BORP EML MBOR VAC VAC I VAC II VBOR
	04	E36A E36B
	06	G12A G16A G38A G38B
	08	I02A I02B I02C I12A I12B I12C I18A I18B I18C I30A I30B I30C
	21B	X04Z
	Prä	B61B B61C B61D
78.56.99↔		BORP EML MBOR VAC VAC I VAC II VBOR
	04	E36A E36B
	06	G12A G16A G38A G38B
	08	I02A I02B I02C I12A I12B I12C I18A I18B I18C I30A I30B I30C
	21B	X04Z
	Prä	B61B B61C B61D
78.57.00↔		BORP EML MBOR VAC VAC I VAC II VBOR
	04	E36A E36B
	06	G12A G16A G38A G38B
	08	I02A I02B I02C I12A I12B I12C I13A I13B I13C I13D
	21B	X04Z
	Prä	B61B B61C B61D
78.57.10↔		BORP EML MBOR VAC VAC I VAC II VBOR
	04	E36A E36B
	06	G12A G16A G38A G38B
	08	I02A I02B I02C I12A I12B I12C I13A I13B I13C I13D
	21B	X04Z
	Prä	B61B B61C B61D
78.57.20↔		BORP EML MBOR VAC VAC I VAC II VBOR
	04	E36A E36B
	06	G12A G16A G38A G38B
	08	I02A I02B I02C I12A I12B I12C I13A I13B I13C I13D
	21B	X04Z
	Prä	B61B B61C B61D
78.57.99↔		BORP EML MBOR VAC VAC I VAC II VBOR
	04	E36A E36B
	06	G12A G16A G38A G38B
	08	I02A I02B I02C I12A I12B I12C I13A I13B I13C I13D
	21B	X04Z
	Prä	B61B B61C B61D
78.58.10↔		BORP EML MBOR VAC VAC I VAC II VBOR
	04	E36A E36B
	06	G12A G16A G38A G38B
	08	I02A I02B I02C I12A I12B I12C I18A I18B I18C I30A I30B I30C
	21B	X04Z
	Prä	B61B B61C B61D
78.58.99↔		BORP EML MBOR VAC VAC I VAC II VBOR
	04	E36A E36B
	06	G12A G16A G38A G38B
	08	I02A I02B I02C I12A I12B I12C I20A I20B I20C I20D I20E I20F I20G
	09	J02A J02B J08Z
	21B	X04Z
	Prä	B61B B61C B61D
78.59.00↔	03	D25A D25B D28Z D29Z
	04	E02A E02B E02C
	08	I28A I28B I28C
	09	J02A J02B J08Z
	21B	X06A X06B X06C
78.59.10↔		BORP EML MBOR VAC VAC I VAC II VBOR
	04	E36A E36B
	06	G12A G16A G38A G38B
	08	I02A I02B I02C I32A I32B I32C I32D I32E I32F
	21B	X05Z
78.59.30↔		BORP EML MBOR VAC VAC I VAC II VBOR
	04	E36A E36B
	06	G12A G16A G38A G38B
	08	I28A I28B I28C
	21B	X04Z
78.59.40↔		BORP EML MBOR VAC VAC I VAC II VBOR
	04	E36A E36B
	06	G12A G16A G38A G38B
	08	I02A I02B I02C I12A I12B I12C I20A I20B I20C I20D I20E I20F I20G
	09	J02A J02B J08Z
	21B	X04Z X05Z
	Prä	B61B B61C B61D
78.59.90↔	03	D25A D25B D28Z D29Z
	04	E02A E02B E02C
	08	I28A I28B I28C
	09	J02A J02B J08Z
	21B	X06A X06B X06C
78.59.99↔	03	D25A D25B D28Z D29Z
	04	E02A E02B E02C
	08	I28A I28B I28C
	09	J02A J02B J08Z

CHOP	MDC	DRG
	21B	X06A X06B X06C
78.60.05↔		BORP MBOR VAC
		VAC I VAC II VBOR
	01	B03A B03B B03C
	04	E36A E36B
	06	G12A G16A G38A
		G38B
	08	I02A I02B I02C
		I12A I12B I12C
		I23A I23B I23C
	21B	X04Z X05Z X06A
		X06B X06C
	Prä	B61B B61C B61D
78.60.08↔		BORP MBOR VAC
		VAC I VAC II VBOR
	01	B03A B03B B03C
	04	E36A E36B
	06	G12A G16A G38A
		G38B
	08	I02A I02B I02C
		I12A I12B I12C
		I23A I23B I23C
	21B	X04Z X05Z X06A
		X06B X06C
	Prä	B61B B61C B61D
78.61.01↔		BORP MBOR VAC
		VAC I VAC II VBOR
	04	E36A E36B
	06	G12A G16A G38A
		G38B
	08	I02A I02B I02C
		I12A I12B I12C
		I23A I23B I23C
	21B	X06A X06B X06C
	Prä	B61B B61C B61D
78.61.05↔		BORP MBOR VAC
		VAC I VAC II VBOR
	04	E02A E02B E02C
		E36A E36B
	06	G12A G16A G38A
		G38B
	08	I02A I02B I02C
		I12A I12B I12C
		I23A I23B I23C
	21B	X06A X06B X06C
	Prä	B61B B61C B61D
78.61.08↔		BORP MBOR VAC
		VAC I VAC II VBOR
	04	E36A E36B
	06	G12A G16A G38A
		G38B
	08	I02A I02B I02C
		I12A I12B I12C
		I23A I23B I23C
	21B	X06A X06B X06C
	Prä	B61B B61C B61D
78.61.11↔		BORP MBOR VAC
		VAC I VAC II VBOR
	04	E02A E02B E02C
		E36A E36B
	05	F21A F21B F21C
	06	G12A G16A G38A
		G38B
	08	I02A I02B I02C
		I12A I12B I12C
		I23A I23B I23C
		I28A I28B
	21B	X06A X06B X06C
	Prä	B61B B61C B61D
78.62.01↔		BORP MBOR VAC
		VAC I VAC II VBOR
	01	B03A B03B B03C
	04	E36A E36B
	06	G12A G16A G38A
		G38B
	08	I02A I02B I02C
		I12A I12B I12C
		I13A I13B I23A
		I23B I23C
	21B	X06A X06B X06C
	Prä	B61B B61C B61D
78.62.02↔		BORP MBOR VAC
		VAC I VAC II VBOR
	01	B03A B03B B03C
	04	E36A E36B
	06	G12A G16A G38A
		G38B
	08	I02A I02B I02C
		I12A I12B I12C
		I13A I13B I23A
		I23B I23C
	21B	X06A X06B X06C
	Prä	B61B B61C B61D
78.62.05↔		BORP MBOR VAC
		VAC I VAC II VBOR
	01	B03A B03B B03C
	04	E36A E36B
	06	G12A G16A G38A
		G38B
	08	I02A I02B I02C
		I12A I12B I12C
		I13A I13B I23A
		I23B I23C
	21B	X06A X06B X06C
	Prä	B61B B61C B61D
78.62.08↔		BORP MBOR VAC
		VAC I VAC II VBOR
	01	B03A B03B B03C
	04	E36A E36B
	06	G12A G16A G38A
		G38B
	08	I02A I02B I02C
		I12A I12B I12C
		I13A I13B I23A
		I23B I23C
	21B	X06A X06B X06C
	Prä	B61B B61C B61D
78.63.01↔		BORP MBOR VAC
		VAC I VAC II VBOR
	01	B03A B03B B03C
	04	E36A E36B
	06	G12A G16A G38A
		G38B
	08	I02A I02B I02C
		I12A I12B I12C
		I23A I23B I23C
	21B	X05Z X06A X06B
		X06C
	Prä	B61B B61C B61D
78.63.05↔		BORP MBOR VAC
		VAC I VAC II VBOR
	01	B03A B03B B03C
	04	E36A E36B
	06	G12A G16A G38A
		G38B
	08	I02A I02B I02C
		I12A I12B I12C
		I23A I23B I23C
	21B	X05Z X06A X06B
		X06C
	Prä	B61B B61C B61D
78.63.08↔		BORP MBOR VAC
		VAC I VAC II VBOR
	01	B03A B03B B03C
	04	E36A E36B
	06	G12A G16A G38A
		G38B
	08	I02A I02B I02C
		I12A I12B I12C
		I23A I23B I23C
	21B	X05Z X06A X06B
		X06C
	Prä	B61B B61C B61D
78.64.01↔		BORP MBOR VAC
		VAC I VAC II VBOR
	01	B03A B03B B03C
	04	E36A E36B
	06	G12A G16A G38A
		G38B
	08	I02A I02B I02C
		I12A I12B I12C
		I23A I23B I23C
	21B	X05Z X06A X06B
		X06C
	Prä	B61B B61C B61D
78.64.05↔		BORP MBOR VAC
		VAC I VAC II VBOR
	01	B03A B03B B03C
	04	E36A E36B
	06	G12A G16A G38A
		G38B
	08	I02A I02B I02C
		I12A I12B I12C
		I23A I23B I23C
	21B	X05Z X06A X06B
		X06C
	Prä	B61B B61C B61D
78.64.08↔		BORP MBOR VAC
		VAC I VAC II VBOR
	01	B03A B03B B03C
	04	E36A E36B
	06	G12A G16A G38A
		G38B
	08	I02A I02B I02C
		I12A I12B I12C
		I23A I23B I23C
	21B	X05Z X06A X06B
		X06C
	Prä	B61B B61C B61D
78.65.01↔		BORP MBOR VAC
		VAC I VAC II VBOR
	01	B03A B03B B03C
	04	E36A E36B
	06	G12A G16A G38A
		G38B
	08	I02A I02B I02C
		I12A I12B I12C
		I21A I21B
	21B	X04Z X06A X06B
		X06C
	Prä	B61B B61C B61D
78.65.02↔		BORP MBOR VAC
		VAC I VAC II VBOR
	01	B03A B03B B03C
	04	E36A E36B
	06	G12A G16A G38A
		G38B
	08	I02A I02B I02C
		I12A I12B I12C
		I21A I21B

PROC

PROC

CHOP	MDC	DRG
	21B	X04Z X06A X06B X06C
78.65.03↔	Prä	B61B B61C B61D BORP MBOR VAC VAC I VAC II VBOR
	01	B03A B03B B03C
	04	E36A E36B
	06	G12A G16A G38A G38B
	08	I02A I02B I02C I12A I12B I12C I21A I21B
	21B	X04Z X06A X06B X06C
78.65.04↔	Prä	B61B B61C B61D BORP MBOR VAC VAC I VAC II VBOR
	01	B03A B03B B03C
	04	E36A E36B
	06	G12A G16A G38A G38B
	08	I02A I02B I02C I12A I12B I12C I21A I21B
	21B	X04Z X06A X06B X06C
78.65.05↔	Prä	B61B B61C B61D BORP MBOR VAC VAC I VAC II VBOR
	01	B03A B03B B03C
	04	E36A E36B
	06	G12A G16A G38A G38B
	08	I02A I02B I02C I12A I12B I12C I21A I21B
	21B	X04Z X06A X06B X06C
78.65.08↔	Prä	B61B B61C B61D BORP MBOR VAC VAC I VAC II VBOR
	01	B03A B03B B03C
	04	E36A E36B
	06	G12A G16A G38A G38B
	08	I02A I02B I02C I12A I12B I12C I21A I21B
	21B	X04Z X06A X06B X06C
78.66.01↔	Prä	B61B B61C B61D BORP MBOR VAC VAC I VAC II VBOR
	04	E36A E36B
	06	G12A G16A G38A G38B
	08	I02A I02B I02C I12A I12B I12C I23A I23B I23C
	21B	X04Z
78.66.05↔	Prä	B61B B61C B61D BORP MBOR VAC VAC I VAC II VBOR
	04	E36A E36B
	06	G12A G16A G38A G38B
	08	I02A I02B I02C I12A I12B I12C I23A I23B I23C
	21B	X04Z
78.66.08↔	Prä	B61B B61C B61D BORP MBOR VAC VAC I VAC II VBOR
	04	E36A E36B
	06	G12A G16A G38A G38B
	08	I02A I02B I02C I12A I12B I12C I23A I23B I23C
	21B	X04Z
78.67.01↔	Prä	B61B B61C B61D BORP MBOR VAC VAC I VAC II VBOR
	04	E36A E36B
	06	G12A G16A G38A G38B
	08	I02A I02B I02C I12A I12B I12C I23A I23B I23C
	21B	X04Z X06A X06B X06C
78.67.05↔	Prä	B61B B61C B61D BORP MBOR VAC VAC I VAC II VBOR
	04	E36A E36B
	06	G12A G16A G38A G38B
	08	I02A I02B I02C I12A I12B I12C I23A I23B I23C
	21B	X04Z X06A X06B X06C
78.67.11↔	Prä	B61B B61C B61D BORP MBOR VAC VAC I VAC II VBOR
	04	E36A E36B
	06	G12A G16A G38A G38B
	08	I02A I02B I02C I12A I12B I12C I23A I23B I23C
	21B	X04Z X06A X06B X06C
78.67.12↔	Prä	B61B B61C B61D BORP MBOR VAC VAC I VAC II VBOR
	04	E36A E36B
	06	G12A G16A G38A G38B
	08	I02A I02B I02C I12A I12B I12C I23A I23B I23C
	21B	X04Z X06A X06B X06C
78.67.13↔	Prä	B61B B61C B61D BORP MBOR VAC VAC I VAC II VBOR
	04	E36A E36B
	06	G12A G16A G38A G38B
	08	I02A I02B I02C I12A I12B I12C I23A I23B I23C
	21B	X04Z X06A X06B X06C
78.67.21↔	Prä	B61B B61C B61D BORP MBOR VAC VAC I VAC II VBOR
	04	E36A E36B
	06	G12A G16A G38A G38B
	08	I02A I02B I02C I12A I12B I12C I23A I23B I23C
	21B	X04Z X06A X06B X06C
78.67.22↔	Prä	B61B B61C B61D BORP MBOR VAC VAC I VAC II VBOR
	04	E36A E36B
	06	G12A G16A G38A G38B
	08	I02A I02B I02C I12A I12B I12C I23A I23B I23C
	21B	X04Z X06A X06B X06C
78.67.28↔	Prä	B61B B61C B61D BORP MBOR VAC VAC I VAC II VBOR
	04	E36A E36B
	06	G12A G16A G38A G38B
	08	I02A I02B I02C I12A I12B I12C I23A I23B I23C
	21B	X04Z X06A X06B X06C
78.68.01↔	Prä	B61B B61C B61D BORP MBOR VAC VAC I VAC II VBOR
	04	E36A E36B
	06	G12A G16A G38A G38B
	08	I02A I02B I02C I12A I12B I12C I23A I23B I23C
	21B	X04Z X06A X06B X06C
78.68.05↔	Prä	B61B B61C B61D BORP MBOR VAC VAC I VAC II VBOR
	04	E36A E36B
	06	G12A G16A G38A G38B
	08	I02A I02B I02C I12A I12B I12C I23A I23B I23C
	21B	X04Z X06A X06B X06C
78.68.06↔	Prä	B61B B61C B61D BORP MBOR VAC VAC I VAC II VBOR
	04	E36A E36B
	06	G12A G16A G38A G38B
	08	I02A I02B I02C I12A I12B I12C I23A I23B I23C
	21B	X04Z X06A X06B X06C
78.68.08↔	Prä	B61B B61C B61D BORP MBOR VAC VAC I VAC II VBOR
	04	E36A E36B
	06	G12A G16A G38A G38B
	08	I02A I02B I02C I12A I12B I12C I23A I23B I23C

CHOP	MDC	DRG
	21B	X04Z X06A X06B X06C
	Prä	B61B B61C B61D
78.69.11↔		BORP MBOR VAC VAC I VAC II VBOR
	01	B03A B03B B03C B17A B17B
	04	E36A E36B
	06	G12A G16A G38A G38B
	08	I02A I02B I02C I12A I12B I12C I23A I23B I23C
	21B	X05Z X06A X06B X06C
	Prä	B61B B61C B61D
78.69.15↔		BORP MBOR VAC VAC I VAC II VBOR
	01	B03A B03B B03C B17A B17B
	04	E36A E36B
	06	G12A G16A G38A G38B
	08	I02A I02B I02C I12A I12B I12C I23A I23B I23C
	21B	X05Z X06A X06B X06C
	Prä	B61B B61C B61D
78.69.18↔		BORP MBOR VAC VAC I VAC II VBOR
	01	B03A B03B B03C B17A B17B
	04	E36A E36B
	06	G12A G16A G38A G38B
	08	I02A I02B I02C I12A I12B I12C I23A I23B I23C
	21B	X05Z X06A X06B X06C
	Prä	B61B B61C B61D
78.69.21↔		BORP MBOR VAC VAC I VAC II VBOR
	01	B03A B03B B03C B17A B17B
	04	E36A E36B
	06	G12A G16A G38A G38B
	08	I02A I02B I02C I12A I12B I12C I23A I23B
	21B	X04Z X05Z X06A X06B X06C
	Prä	B61B B61C B61D
78.69.22↔		BORP MBOR VAC VAC I VAC II VBOR
	01	B03A B03B B03C B17A B17B
	04	E36A E36B
	06	G12A G16A G38A G38B
	08	I02A I02B I02C I12A I12B I12C I23A I23B
	21B	X04Z X05Z X06A X06B X06C
	Prä	B61B B61C B61D
78.69.25↔		BORP MBOR VAC VAC I VAC II VBOR
	01	B03A B03B B03C B17A B17B
	04	E36A E36B
	06	G12A G16A G38A G38B
	08	I02A I02B I02C I12A I12B I12C I23A I23B
	21B	X04Z X05Z X06A X06B X06C
	Prä	B61B B61C B61D
78.69.28↔		BORP MBOR VAC VAC I VAC II VBOR
	01	B03A B03B B03C B17A B17B
	04	E36A E36B
	06	G12A G16A G38A G38B
	08	I02A I02B I02C I12A I12B I12C I23A I23B I23C
	21B	X04Z X05Z X06A X06B X06C
	Prä	B61B B61C B61D
78.69.31↔		BORP MBOR VAC VAC I VAC II VBOR
	01	B03A B03B B03C B17A B17B
	04	E36A E36B
	06	G12A G16A G38A G38B
	08	I02A I02B I02C I12A I12B I12C I23A I23B I23C
	21B	X04Z X05Z X06A X06B X06C
	Prä	B61B B61C B61D
78.69.38↔		BORP MBOR VAC VAC I VAC II VBOR
	01	B03A B03B B03C B17A B17B
	04	E36A E36B
	06	G12A G16A G38A G38B
	08	I02A I02B I02C I12A I12B I12C I23A I23B I23C
	21B	X04Z X05Z X06A X06B X06C
	Prä	B61B B61C B61D
78.69.41↔		BORP MBOR VAC VAC I VAC II VBOR
	01	B03A B03B B03C B17A B17B
	04	E36A E36B
	06	G12A G16A G38A G38B
	08	I02A I02B I02C I12A I12B I12C I23A I23B I23C
	21B	X04Z X05Z X06A X06B X06C
	Prä	B61B B61C B61D
78.69.45↔		BORP MBOR VAC VAC I VAC II VBOR
	01	B03A B03B B03C B17A B17B
	04	E36A E36B
	06	G12A G16A G38A G38B
	08	I02A I02B I02C I12A I12B I12C I23A I23B I23C
	21B	X04Z X05Z X06A X06B X06C
	Prä	B61B B61C B61D
78.69.48↔		BORP MBOR VAC VAC I VAC II VBOR
	01	B03A B03B B03C B17A B17B
	04	E36A E36B
	06	G12A G16A G38A G38B
	08	I02A I02B I02C I12A I12B I12C I23A I23B I23C
	21B	X04Z X05Z X06A X06B X06C
	Prä	B61B B61C B61D
78.69.51↔		BORP MBOR VAC VAC I VAC II VBOR
	01	B03A B03B B03C B17A B17B
	04	E36A E36B
	06	G12A G16A G38A G38B
	08	I02A I02B I02C I12A I12B I12C I23A I23B I23C
	21B	X04Z X05Z X06A X06B X06C
	Prä	B61B B61C B61D
78.69.52↔		BORP MBOR VAC VAC I VAC II VBOR
	01	B03A B03B B03C B17A B17B
	04	E36A E36B
	06	G12A G16A G38A G38B
	08	I02A I02B I02C I12A I12B I12C I23A I23B I23C
	21B	X04Z X05Z X06A X06B X06C
	Prä	B61B B61C B61D
78.69.53↔		BORP MBOR VAC VAC I VAC II VBOR
	01	B03A B03B B03C B17A B17B
	04	E36A E36B
	06	G12A G16A G38A G38B
	08	I02A I02B I02C I12A I12B I12C I23A I23B I23C
	21B	X04Z X05Z X06A X06B X06C
	Prä	B61B B61C B61D
78.69.55↔		BORP MBOR VAC VAC I VAC II VBOR
	01	B03A B03B B03C B17A B17B
	04	E36A E36B
	06	G12A G16A G38A G38B
	08	I02A I02B I02C I12A I12B I12C I23A I23B I23C
	21B	X04Z X05Z X06A X06B X06C

PROC

CHOP	MDC	DRG
	Prä	B61B B61C B61D
78.69.58↔		BORP MBOR VAC
		VAC I VAC II VBOR
	01	B03A B03B B03C
		B17A B17B
	04	E36A E36B
	06	G12A G16A G38A
		G38B
	08	I02A I02B I02C
		I12A I12B I12C
		I23A I23B I23C
	21B	X04Z X05Z X06A
		X06B X06C
	Prä	B61B B61C B61D
78.69.71↔		BORP MBOR VAC
		VAC I VAC II VBOR
	01	B03A B03B B03C
	04	E36A E36B
	06	G12A G16A G38A
		G38B
	08	I02A I02B I02C
		I12A I12B I12C
		I23A I23B I23C
	21B	X04Z X05Z X06A
		X06B X06C
	Prä	B61B B61C B61D
78.91↔		BORP MBOR VAC
		VBOR
	04	E02A E02B E36A
		E36B
	06	G12A G16A G38A
		G38B
	08	I02A I02B I02C
		I12A I12B I12C
		I28A I28B
	21B	X04Z X05Z X06A
		X06B X06C
	Prä	B61B B61C B61D
78.92↔		BORP MBOR VAC
		VBOR
	04	E36A E36B
	06	G12A G16A G38A
		G38B
	08	I13A I13B I13C
		I13D
	21B	X06A X06B X06C
78.93↔		BORP MBOR VAC
		VBOR
	04	E36A E36B
	06	G12A G16A G38A
		G38B
	08	I31A I31B
	21B	X06A X06B X06C
78.94↔		BORP MBOR VAC
		VBOR
	04	E36A E36B
	06	G12A G16A G38A
		G38B
	08	I02A I02B I02C
		I32A I32B I32C
		I32D I32E I32F
	21B	X05Z
78.95↔		BORP MBOR VAC
		VBOR
	04	E36A E36B
	06	G12A G16A G38A
		G38B
	08	I02A I02B I02C
		I08A I08B I08C
		I12A I12B I12C
	21B	X04Z
	Prä	B61B B61C B61D
78.96↔		BORP MBOR VAC
		VBOR
	04	E36A E36B
	06	G12A G16A G38A
		G38B
	08	I02A I02B I02C
		I12A I12B I12C
		I18A I18B I18C
		I30A I30B I30C
	21B	X04Z
	Prä	B61B B61C B61D
78.97↔		BORP MBOR VAC
		VBOR
	04	E02A E02B E36A
		E36B
	06	G12A G16A G38A
		G38B
	08	I02A I02B I02C
		I12A I12B I12C
		I28A I28B
	21B	X04Z X05Z X06A
		X06B X06C
	Prä	B61B B61C B61D
78.98↔		BORP MBOR VAC
		VBOR
	04	E36A E36B
	06	G12A G16A G38A
		G38B
	08	I02A I02B I02C
		I12A I12B I12C
		I20A I20B I20C
		I20D I20E I20F
		I20G
	21B	X04Z
	Prä	B61B B61C B61D
78.99↔		BORP MBOR VAC
		VBOR
	04	E02A E02B E36A
		E36B
	06	G12A G16A G38A
		G38B
	08	I02A I02B I02C
		I12A I12B I12C
		I28A I28B
	21B	X04Z X05Z X06A
		X06B X06C
	Prä	B61B B61C B61D
79.11.00↔		BORP EML MBOR
		VAC VAC I VAC II
		VBOR
	04	E36A E36B
	06	G12A G16A G38A
		G38B
	08	I13A I13B I13C
		I13D
	21B	X06A X06B X06C
79.11.10↔		BORP EML MBOR
		VAC VAC I VAC II
		VBOR
	04	E36A E36B
	06	G12A G16A G38A
		G38B
	08	I13A I13B I13C
		I13D
	21B	X06A X06B X06C
79.11.11↔		BORP EML MBOR
		VAC VAC I VAC II
		VBOR
	04	E36A E36B
	06	G12A G16A G38A
		G38B
	08	I13A I13B
	21B	X06A X06B X06C
79.11.19↔		BORP EML MBOR
		VAC VAC I VAC II
		VBOR
	04	E36A E36B
	06	G12A G16A G38A
		G38B
	08	I13A I13B I13C
		I13D
	21B	X06A X06B X06C
79.11.20↔		BORP EML MBOR
		VAC VAC I VAC II
		VBOR
	04	E36A E36B
	06	G12A G16A G38A
		G38B
	08	I13A I13B I13C
		I13D
	21B	X06A X06B X06C
79.11.21↔		BORP EML MBOR
		VAC VAC I VAC II
		VBOR
	04	E36A E36B
	06	G12A G16A G38A
		G38B
	08	I13A I13B
	21B	X06A X06B X06C
79.11.29↔		BORP EML MBOR
		VAC VAC I VAC II
		VBOR
	04	E36A E36B
	06	G12A G16A G38A
		G38B
	08	I13A I13B I13C
		I13D
	21B	X06A X06B X06C
79.11.99↔		BORP EML MBOR
		VAC VAC I VAC II
		VBOR
	04	E36A E36B
	06	G12A G16A G38A
		G38B
	08	I13A I13B I13C
		I13D
	21B	X06A X06B X06C
79.12.00↔		BORP EML MBOR
		VAC VAC I VAC II
		VBOR
	04	E36A E36B
	06	G12A G16A G38A
		G38B
	08	I13A I13B I59Z
	21B	X06A X06B X06C
79.12.10↔		BORP EML MBOR
		VAC VAC I VAC II
		VBOR
	04	E36A E36B
	06	G12A G16A G38A
		G38B
	08	I13A I13B I59Z
	21B	X06A X06B X06C
79.12.11↔		BORP EML MBOR
		VAC VAC I VAC II
		VBOR
	04	E36A E36B
	06	G12A G16A G38A

CHOP	MDC	DRG
		G38B
	08	I13A I13B I59Z
	21B	X06A X06B X06C
79.12.12↔		BORP EML MBOR VAC VAC I VAC II VBOR
	04	E36A E36B
	06	G12A G16A G38A G38B
	08	I13A I13B I59Z
	21B	X06A X06B X06C
79.12.13↔		BORP EML MBOR VAC VAC I VAC II VBOR
	04	E36A E36B
	06	G12A G16A G38A G38B
	08	I13A I13B I59Z
	21B	X06A X06B X06C
79.12.19↔		BORP EML MBOR VAC VAC I VAC II VBOR
	04	E36A E36B
	06	G12A G16A G38A G38B
	08	I13A I13B I59Z
	21B	X06A X06B X06C
79.12.20↔		BORP EML MBOR VAC VAC I VAC II VBOR
	04	E36A E36B
	06	G12A G16A G38A G38B
	08	I13A I13B I59Z
	21B	X06A X06B X06C
79.12.21↔		BORP EML MBOR VAC VAC I VAC II VBOR
	04	E36A E36B
	06	G12A G16A G38A G38B
	08	I13A I13B I59Z
	21B	X06A X06B X06C
79.12.22↔		BORP EML MBOR VAC VAC I VAC II VBOR
	04	E36A E36B
	06	G12A G16A G38A G38B
	08	I13A I13B I59Z
	21B	X06A X06B X06C
79.12.23↔		BORP EML MBOR VAC VAC I VAC II VBOR
	04	E36A E36B
	06	G12A G16A G38A G38B
	08	I13A I13B I59Z
	21B	X06A X06B X06C
79.12.29↔		BORP EML MBOR VAC VAC I VAC II VBOR
	04	E36A E36B
	06	G12A G16A G38A G38B
	08	I13A I13B I59Z
	21B	X06A X06B X06C
79.12.30↔		BORP EML MBOR VAC VAC I VAC II VBOR
	04	E36A E36B
	06	G12A G16A G38A G38B
	08	I13A I13B I59Z
	21B	X06A X06B X06C
79.12.31↔		BORP EML MBOR VAC VAC I VAC II VBOR
	04	E36A E36B
	06	G12A G16A G38A G38B
	08	I13A I13B I59Z
	21B	X06A X06B X06C
79.12.32↔		BORP EML MBOR VAC VAC I VAC II VBOR
	04	E36A E36B
	06	G12A G16A G38A G38B
	08	I13A I13B I59Z
	21B	X06A X06B X06C
79.12.39↔		BORP EML MBOR VAC VAC I VAC II VBOR
	04	E36A E36B
	06	G12A G16A G38A G38B
	08	I13A I13B I59Z
	21B	X06A X06B X06C
79.12.99↔		BORP EML MBOR VAC VAC I VAC II VBOR
	04	E36A E36B
	06	G12A G16A G38A G38B
	08	I13A I13B I59Z
	21B	X06A X06B X06C
79.13.00↔		BORP EML MBOR VAC VAC I VAC II VBOR
	04	E36A E36B
	06	G12A G16A G38A G38B
	08	I02A I02B I02C I32A I32B I32C I32D I32E I32F
	21B	X05Z
79.13.10↔		BORP EML MBOR VAC VAC I VAC II VBOR
	04	E36A E36B
	06	G12A G16A G38A G38B
	08	I02A I02B I02C I32A I32B I32C I32D I32E I32F
	21B	X05Z
79.13.19↔		BORP EML MBOR VAC VAC I VAC II VBOR
	04	E36A E36B
	06	G12A G16A G38A G38B
	08	I02A I02B I02C I32A I32B I32C I32D I32E I32F
	21B	X05Z
79.13.99↔		BORP EML MBOR VAC VAC I VAC II VBOR
	04	E36A E36B
	06	G12A G16A G38A G38B
	08	I02A I02B I02C I32A I32B I32C I32D I32E I32F
	21B	X05Z
79.14.00↔		BORP EML MBOR VAC VAC I VAC II VBOR
	04	E36A E36B
	06	G12A G16A G38A G38B
	08	I02A I02B I02C I32A I32B I32C I32D I32E I32F
	21B	X05Z
79.14.10↔		BORP EML MBOR VAC VAC I VAC II VBOR
	04	E36A E36B
	06	G12A G16A G38A G38B
	08	I02A I02B I02C I32A I32B I32C I32D I32E I32F
	21B	X05Z
79.14.19↔		BORP EML MBOR VAC VAC I VAC II VBOR
	04	E36A E36B
	06	G12A G16A G38A G38B
	08	I02A I02B I02C I32A I32B I32C I32D I32E I32F
	21B	X05Z
79.14.99↔		BORP EML MBOR VAC VAC I VAC II VBOR
	04	E36A E36B
	06	G12A G16A G38A G38B
	08	I02A I02B I02C I32A I32B I32C I32D I32E I32F
	21B	X05Z
79.15.00↔		BORP EML MBOR VAC VAC I VAC II VBOR
	01	B03A B03B B03C
	04	E36A E36B
	06	G12A G16A G38A G38B
	08	I02A I02B I02C I08A I08B I08C
	21B	X04Z
79.15.10↔		BORP EML MBOR VAC VAC I VAC II VBOR
	01	B03A B03B B03C
	04	E36A E36B
	06	G12A G16A G38A G38B
	08	I02A I02B I02C I08A I08B I08C
	21B	X04Z
79.15.20↔		BORP EML MBOR VAC VAC I VAC II VBOR

PROC

PROC

CHOP	MDC	DRG
	01	B03A B03B B03C
	04	E36A E36B
	06	G12A G16A G38A G38B
	08	I02A I02B I02C I08A I08B I08C
	21B	X04Z
79.15.99↔		BORP EML MBOR VAC VAC I VAC II VBOR
	01	B03A B03B B03C
	04	E36A E36B
	06	G12A G16A G38A G38B
	08	I02A I02B I02C I08A I08B I08C
	21B	X04Z
79.16.00↔		BORP EML MBOR VAC VAC I VAC II VBOR
	04	E36A E36B
	06	G12A G16A G38A G38B
	08	I13A I13B I13C I13D
	21B	X04Z
79.16.10↔		BORP EML MBOR VAC VAC I VAC II VBOR
	04	E36A E36B
	06	G12A G16A G38A G38B
	08	I13A I13B I13C I13D
	21B	X04Z
79.16.11↔		BORP EML MBOR VAC VAC I VAC II VBOR
	04	E36A E36B
	06	G12A G16A G38A G38B
	08	I13A I13B
	21B	X04Z
79.16.29↔		BORP EML MBOR VAC VAC I VAC II VBOR
	04	E36A E36B
	06	G12A G16A G38A G38B
	08	I13A I13B I13C I13D
	21B	X04Z
79.16.30↔		BORP EML MBOR VAC VAC I VAC II VBOR
	04	E36A E36B
	06	G12A G16A G38A G38B
	08	I13A I13B I13C I13D
	21B	X04Z
79.16.31↔		BORP EML MBOR VAC VAC I VAC II VBOR
	04	E36A E36B
	06	G12A G16A G38A G38B
	08	I13A I13B
	21B	X04Z
79.16.39↔		BORP EML MBOR VAC VAC I VAC II VBOR
	04	E36A E36B
	06	G12A G16A G38A G38B
	08	I13A I13B I13C I13D
	21B	X04Z
79.16.40↔		BORP EML MBOR VAC VAC I VAC II VBOR
	04	E36A E36B
	06	G12A G16A G38A G38B
	08	I13A I13B I13C I13D
	21B	X04Z
79.16.49↔		BORP EML MBOR VAC VAC I VAC II VBOR
	04	E36A E36B
	06	G12A G16A G38A G38B
	08	I13A I13B I13C I13D
	21B	X04Z
79.16.50↔		BORP EML MBOR VAC VAC I VAC II VBOR
	04	E36A E36B
	06	G12A G16A G38A G38B
	08	I13A I13B I13C I13D
	21B	X04Z
79.16.59↔		BORP EML MBOR VAC VAC I VAC II VBOR
	04	E36A E36B
	06	G12A G16A G38A G38B
	08	I13A I13B I13C I13D
	21B	X04Z
79.16.99↔		BORP EML MBOR VAC VAC I VAC II VBOR
	04	E36A E36B
	06	G12A G16A G38A G38B
	08	I13A I13B I13C I13D
	21B	X04Z
79.17.10↔		BORP EML MBOR VAC VAC I VAC II VBOR
	04	E36A E36B
	06	G12A G16A G38A G38B
	08	I20A I20B I20C I20D I20G
	21B	X04Z
79.17.11↔		BORP EML MBOR VAC VAC I VAC II VBOR
	04	E36A E36B
	06	G12A G16A G38A G38B
	08	I13A I20A I20B I20C I20D I20G
	21B	X04Z
79.17.19↔		BORP EML MBOR VAC VAC I VAC II VBOR
	04	E36A E36B
	06	G12A G16A G38A G38B
	08	I20A I20B I20C I20D I20G
	21B	X04Z
79.17.29↔		BORP EML MBOR VAC VAC I VAC II VBOR
	04	E36A E36B
	06	G12A G16A G38A G38B
	08	I20A I20B I20C I20D I20E I20F I20G
	21B	X04Z
79.17.99↔		BORP EML MBOR VAC VAC I VAC II VBOR
	04	E36A E36B
	06	G12A G16A G38A G38B
	08	I20A I20B I20C I20D I20E I20F I20G
	21B	X04Z
79.18↔		BORP EML MBOR VAC VAC I VAC II VBOR
	04	E36A E36B
	06	G12A G16A G38A G38B
	08	I20A I20B I20C I20D I20E I20F I20G
	21B	X04Z
79.19.00↔		BORP MBOR VAC VAC I VAC II VBOR
	04	E36A E36B
	06	G12A G16A G38A G38B
	08	I28A I28B
	21B	X06A X06B X06C
79.19.10↔		BORP MBOR VAC VAC I VAC II VBOR
	04	E02A E02B E36A E36B
	06	G12A G16A G38A G38B
	08	I29A I29B I29C
	21B	X06A X06B X06C
79.19.11↔		BORP MBOR VAC VAC I VAC II VBOR
	04	E02A E02B E36A E36B
	06	G12A G16A G38A G38B
	08	I28A I28B
	21B	X06A X06B X06C
79.19.12↔		BORP MBOR VAC VAC I VAC II VBOR
	04	E02A E02B E36A E36B
	06	G12A G16A G38A G38B
	08	I28A I28B

CHOP	MDC	DRG
	21B	X06A X06B X06C
79.19.20↔		BORP EML MBOR VAC VAC I VAC II VBOR
	04	E36A E36B
	06	G12A G16A G38A G38B
	08	I02A I02B I02C I08A I08B I08C
	21B	X04Z
79.19.30↔		BORP MBOR VAC VAC I VAC II VBOR
	04	E36A E36B
	06	G12A G16A G38A G38B
	08	I18A I18B I18C I30A I30B I30C
	21B	X04Z
79.19.99↔		BORP MBOR VAC VAC I VAC II VBOR
	04	E36A E36B
	06	G12A G16A G38A G38B
	08	I28A I28B
	21B	X06A X06B X06C
79.21.00↔		BORP EML MBOR VAC VAC I VAC II VBOR
	04	E36A E36B
	06	G12A G16A G38A G38B
	08	I13A I13B I13C I13D
	21B	X06A X06B X06C
79.21.10↔		BORP EML MBOR VAC VAC I VAC II VBOR
	04	E36A E36B
	06	G12A G16A G38A G38B
	08	I13A I13B I13C I13D
	21B	X06A X06B X06C
79.21.11↔		BORP EML MBOR VAC VAC I VAC II VBOR
	04	E36A E36B
	06	G12A G16A G38A G38B
	08	I13A I13B I13C I13D
	21B	X06A X06B X06C
79.21.12↔		BORP EML MBOR VAC VAC I VAC II VBOR
	04	E36A E36B
	06	G12A G16A G38A G38B
	08	I13A I13B I13C I13D
	21B	X06A X06B X06C
79.21.99↔		BORP EML MBOR VAC VAC I VAC II VBOR
	04	E36A E36B
	06	G12A G16A G38A G38B
	08	I13A I13B I13C I13D
	21B	X06A X06B X06C
79.22.00↔		BORP EML MBOR VAC VAC I VAC II VBOR
	04	E36A E36B
	06	G12A G16A G38A G38B
	08	I31A I31B
	21B	X06A X06B X06C
79.22.10↔		BORP EML MBOR VAC VAC I VAC II VBOR
	04	E36A E36B
	06	G12A G16A G38A G38B
	08	I31A I31B
	21B	X06A X06B X06C
79.22.19↔		BORP EML MBOR VAC VAC I VAC II VBOR
	04	E36A E36B
	06	G12A G16A G38A G38B
	08	I31A I31B
	21B	X06A X06B X06C
79.22.20↔		BORP EML MBOR VAC VAC I VAC II VBOR
	04	E36A E36B
	06	G12A G16A G38A G38B
	08	I31A I31B
	21B	X06A X06B X06C
79.22.99↔		BORP EML MBOR VAC VAC I VAC II VBOR
	04	E36A E36B
	06	G12A G16A G38A G38B
	08	I31A I31B
	21B	X06A X06B X06C
79.23↔		BORP EML MBOR VAC VAC I VAC II VBOR
	04	E36A E36B
	06	G12A G16A G38A G38B
	08	I02A I02B I02C I32A I32B I32C I32D I32E I32F
	21B	X05Z
79.24↔		BORP EML MBOR VAC VAC I VAC II VBOR
	01	B17A B17B
	04	E36A E36B
	06	G12A G16A G38A G38B
	08	I02A I02B I02C I32A I32B I32C I32D I32E I32F
	21B	X05Z
79.25↔		BORP EML MBOR VAC VAC I VAC II VBOR
	04	E36A E36B
	06	G12A G16A G38A G38B
	08	I02A I02B I02C I08A I08B I08C
	21B	X04Z
79.26.00↔		BORP EML MBOR VAC VAC I VAC II VBOR
	04	E36A E36B
	06	G12A G16A G38A G38B
	08	I13A I13B I13C I13D
	21B	X04Z
79.26.10↔		BORP EML MBOR VAC VAC I VAC II VBOR
	04	E36A E36B
	06	G12A G16A G38A G38B
	08	I13A I13B I13C I13D
	21B	X04Z
79.26.11↔		BORP EML MBOR VAC VAC I VAC II VBOR
	04	E36A E36B
	06	G12A G16A G38A G38B
	08	I13A I13B I13C I13D
	21B	X04Z
79.26.12↔		BORP EML MBOR VAC VAC I VAC II VBOR
	04	E36A E36B
	06	G12A G16A G38A G38B
	08	I13A I13B I13C I13D
	21B	X04Z
79.26.20↔		BORP EML MBOR VAC VAC I VAC II VBOR
	04	E36A E36B
	06	G12A G16A G38A G38B
	08	I13A I13B I13C I13D
	21B	X04Z
79.26.21↔		BORP EML MBOR VAC VAC I VAC II VBOR
	04	E36A E36B
	06	G12A G16A G38A G38B
	08	I13A I13B I13C I13D
	21B	X04Z
79.26.22↔		BORP EML MBOR VAC VAC I VAC II VBOR
	04	E36A E36B
	06	G12A G16A G38A G38B
	08	I13A I13B I13C I13D
	21B	X04Z
79.26.99↔		BORP EML MBOR VAC VAC I VAC II VBOR
	04	E36A E36B
	06	G12A G16A G38A G38B
	08	I13A I13B I13C

PROC

CHOP	MDC	DRG
		I13D
	21B	X04Z
79.27.10↔		BORP EML MBOR VAC VAC I VAC II VBOR
	04	E36A E36B
	06	G12A G16A G38A G38B
	08	I20A I20B I20C I20D I20G
	21B	X04Z
79.27.11↔		BORP EML MBOR VAC VAC I VAC II VBOR
	04	E36A E36B
	06	G12A G16A G38A G38B
	08	I20A I20B I20C I20D I20G
	21B	X04Z
79.27.12↔		BORP EML MBOR VAC VAC I VAC II VBOR
	04	E36A E36B
	06	G12A G16A G38A G38B
	08	I20A I20B I20C I20D I20G
	21B	X04Z
79.27.99↔		BORP EML MBOR VAC VAC I VAC II VBOR
	04	E36A E36B
	06	G12A G16A G38A G38B
	08	I20A I20B I20C I20D I20G
	21B	X04Z
79.28↔		BORP EML MBOR VAC VAC I VAC II VBOR
	04	E36A E36B
	06	G12A G16A G38A G38B
	08	I20A I20B I20C I20D I20E I20F I20G
	21B	X04Z
79.29.00↔		BORP EML MBOR VAC VAC I VAC II VBOR
	04	E36A E36B
	06	G12A G16A G38A G38B
	08	I18A I18B I18C I28A I28B
	21B	X04Z X06A X06B X06C
79.29.10↔		BORP EML MBOR VAC VAC I VAC II VBOR
	04	E36A E36B
	06	G12A G16A G38A G38B
	08	I02A I02B I02C I08A I08B I29A I29B I29C
	21B	X06A X06B X06C
79.29.11↔		BORP EML MBOR VAC VAC I VAC II VBOR
	04	E36A E36B
	06	G12A G16A G38A G38B
	08	I02A I02B I02C I08A I08B I29A I29B I29C
	21B	X06A X06B X06C
79.29.20↔		BORP MBOR VAC VAC I VAC II VBOR
	04	E36A E36B
	06	G12A G16A G38A G38B
	08	I28A I28B I28C
	21B	X04Z
79.29.30↔		BORP EML MBOR VAC VAC I VAC II VBOR
	04	E36A E36B
	06	G12A G16A G38A G38B
	08	I02A I02B I02C I08A I08B I08C I18A I18B I18C I30A I30B I30C
	21B	X04Z
79.29.99↔		BORP EML MBOR VAC VAC I VAC II VBOR
	04	E36A E36B
	06	G12A G16A G38A G38B
	08	I02A I02B I02C I08A I08B I18A I18B I18C I28A I28B
	21B	X04Z X06A X06B X06C
79.31.00↔		BORP EML MBOR VAC VAC I VAC II VBOR
	04	E36A E36B
	06	G12A G16A G38A G38B
	08	I13A I13B I13C I13D
	21B	X06A X06B X06C
79.31.10↔		BORP EML MBOR VAC VAC I VAC II VBOR
	04	E36A E36B
	06	G12A G16A G38A G38B
	08	I13A I13B I13C I13D
	21B	X06A X06B X06C
79.31.11↔		BORP EML MBOR VAC VAC I VAC II VBOR
	04	E36A E36B
	06	G12A G16A G38A G38B
	08	I13A I13B I13C I13D
	21B	X06A X06B X06C
79.31.12↔		BORP EML MBOR VAC VAC I VAC II VBOR
	04	E36A E36B
	06	G12A G16A G38A G38B
	08	I13A I13B I13C I13D
	21B	X06A X06B X06C
79.31.20↔		BORP EML MBOR VAC VAC I VAC II VBOR
	04	E36A E36B
	06	G12A G16A G38A G38B
	08	I13A I13B I13C I13D
	21B	X06A X06B X06C
79.31.30↔		BORP EML MBOR VAC VAC I VAC II VBOR
	04	E36A E36B
	06	G12A G16A G38A G38B
	08	I13A I13B I13C I13D
	21B	X06A X06B X06C
79.31.31↔		BORP EML MBOR VAC VAC I VAC II VBOR
	04	E36A E36B
	06	G12A G16A G38A G38B
	08	I13A I13B I13C I13D
	21B	X06A X06B X06C
79.31.90↔		BORP EML MBOR VAC VAC I VAC II VBOR
	04	E36A E36B
	06	G12A G16A G38A G38B
	08	I13A I13B I13C I13D
	21B	X06A X06B X06C
79.31.99↔		BORP EML MBOR VAC VAC I VAC II VBOR
	04	E36A E36B
	06	G12A G16A G38A G38B
	08	I13A I13B I13C I13D
	21B	X06A X06B X06C
79.32.00↔		BORP EML MBOR VAC VAC I VAC II VBOR
	04	E36A E36B
	06	G12A G16A G38A G38B
	08	I31A I31B
	21B	X06A X06B X06C
79.32.10↔		BORP EML MBOR VAC VAC I VAC II VBOR
	04	E36A E36B
	06	G12A G16A G38A G38B
	08	I31A I31B
	21B	X06A X06B X06C
79.32.19↔		BORP EML MBOR VAC VAC I VAC II VBOR
	04	E36A E36B
	06	G12A G16A G38A

CHOP	MDC	DRG
		G38B
	08	I31A I31B
	21B	X06A X06B X06C
79.32.29↔		BORP EML MBOR VAC VAC I VAC II VBOR
	04	E36A E36B
	06	G12A G16A G38A G38B
	08	I31A I31B
	21B	X06A X06B X06C
79.32.99↔		BORP EML MBOR VAC VAC I VAC II VBOR
	04	E36A E36B
	06	G12A G16A G38A G38B
	08	I31A I31B
	21B	X06A X06B X06C
79.33.00↔		BORP EML MBOR VAC VAC I VAC II VBOR
	04	E36A E36B
	06	G12A G16A G38A G38B
	08	I02A I02B I02C I32A I32B I32C I32D I32E I32F
	21B	X05Z
79.33.10↔		BORP EML MBOR VAC VAC I VAC II VBOR
	04	E36A E36B
	06	G12A G16A G38A G38B
	08	I02A I02B I02C I32A I32B I32C I32D I32E I32F
	21B	X05Z
79.33.19↔		BORP EML MBOR VAC VAC I VAC II VBOR
	04	E36A E36B
	06	G12A G16A G38A G38B
	08	I02A I02B I02C I32A I32B I32C I32D I32E I32F
	21B	X05Z
79.33.99↔		BORP EML MBOR VAC VAC I VAC II VBOR
	04	E36A E36B
	06	G12A G16A G38A G38B
	08	I02A I02B I02C I32A I32B I32C I32D I32E I32F
	21B	X05Z
79.34↔		BORP EML MBOR VAC VAC I VAC II VBOR
	04	E36A E36B
	06	G12A G16A G38A G38B
	08	I02A I02B I02C I32A I32B I32C I32D I32E I32F
	21B	X05Z
79.35.00↔		BORP EML MBOR VAC VAC I VAC II VBOR
	01	B03A B03B B03C
	04	E36A E36B
	06	G12A G16A G38A G38B
	08	I02A I02B I02C I08A I08B I08C
	10	K09A K09B
	21B	X04Z
79.35.10↔		BORP EML MBOR VAC VAC I VAC II VBOR
	01	B03A B03B B03C
	04	E36A E36B
	06	G12A G16A G38A G38B
	08	I02A I02B I02C I08A I08B I08C
	10	K09A K09B
	21B	X04Z
79.35.11↔		BORP EML MBOR VAC VAC I VAC II VBOR
	01	B03A B03B B03C
	04	E36A E36B
	06	G12A G16A G38A G38B
	08	I02A I02B I02C I08A I08B I08C
	10	K09A K09B
	21B	X04Z
79.35.12↔		BORP EML MBOR VAC VAC I VAC II VBOR
	01	B03A B03B B03C
	04	E36A E36B
	06	G12A G16A G38A G38B
	08	I02A I02B I02C I08A I08B I08C
	10	K09A K09B
	21B	X04Z
79.35.13↔		BORP EML MBOR VAC VAC I VAC II VBOR
	01	B03A B03B B03C
	04	E36A E36B
	06	G12A G16A G38A G38B
	08	I02A I02B I02C I08A I08B I08C
	10	K09A K09B
	21B	X04Z
79.35.99↔		BORP EML MBOR VAC VAC I VAC II VBOR
	01	B03A B03B B03C
	04	E36A E36B
	06	G12A G16A G38A G38B
	08	I02A I02B I02C I08A I08B I08C
	10	K09A K09B
	21B	X04Z
79.36.00↔		BORP EML MBOR VAC VAC I VAC II VBOR
	04	E36A E36B
	06	G12A G16A G38A G38B
	08	I13A I13B I13C I13D
	21B	X04Z X06A X06B X06C
79.36.10↔		BORP EML MBOR VAC VAC I VAC II VBOR
	04	E36A E36B
	06	G12A G16A G38A G38B
	08	I13A I13B I30A I30B I30C
	21B	X04Z X06A X06B X06C
79.36.11↔		BORP EML MBOR VAC VAC I VAC II VBOR
	04	E36A E36B
	06	G12A G16A G38A G38B
	08	I13A I13B I30A I30B I30C
	21B	X04Z X06A X06B X06C
79.36.12↔		BORP EML MBOR VAC VAC I VAC II VBOR
	04	E36A E36B
	06	G12A G16A G38A G38B
	08	I13A I13B I30A I30B I30C
	21B	X04Z X06A X06B X06C
79.36.13↔		BORP EML MBOR VAC VAC I VAC II VBOR
	04	E36A E36B
	06	G12A G16A G38A G38B
	08	I13A I13B I30A I30B I30C
	21B	X04Z X06A X06B X06C
79.36.14↔		BORP EML MBOR VAC VAC I VAC II VBOR
	04	E36A E36B
	06	G12A G16A G38A G38B
	08	I13A I13B I30A I30B I30C
	21B	X04Z X06A X06B X06C
79.36.20↔		BORP EML MBOR VAC VAC I VAC II VBOR
	04	E36A E36B
	06	G12A G16A G38A G38B
	08	I13A I13B I13C I13D
	21B	X04Z
79.36.30↔		BORP EML MBOR VAC VAC I VAC II VBOR
	04	E36A E36B
	06	G12A G16A G38A G38B

PROC

CHOP	MDC	DRG
	08	I13A I13B I13C I13D
	21B	X04Z
79.36.31↔		BORP EML MBOR VAC VAC I VAC II VBOR
	04	E36A E36B
	06	G12A G16A G38A G38B
	08	I13A I13B I13C I13D
	21B	X04Z
79.36.32↔		BORP EML MBOR VAC VAC I VAC II VBOR
	04	E36A E36B
	06	G12A G16A G38A G38B
	08	I13A I13B I13C I13D
	21B	X04Z X06A X06B X06C
79.36.40↔		BORP EML MBOR VAC VAC I VAC II VBOR
	04	E36A E36B
	06	G12A G16A G38A G38B
	08	I13A I13B I13C I13D I30A I30B I30C
	21B	X04Z
79.36.50↔		BORP EML MBOR VAC VAC I VAC II VBOR
	04	E36A E36B
	06	G12A G16A G38A G38B
	08	I13A I13B I18A I18B I18C I30A I30B I30C
	21B	X04Z X06A X06B X06C
79.36.51↔		BORP EML MBOR VAC VAC I VAC II VBOR
	04	E36A E36B
	06	G12A G16A G38A G38B
	08	I13A I13B I18A I18B I18C I30A I30B I30C
	21B	X04Z X06A X06B X06C
79.36.60↔		BORP EML MBOR VAC VAC I VAC II VBOR
	04	E36A E36B
	06	G12A G16A G38A G38B
	08	I13A I13B I13C I13D
	21B	X04Z
79.36.61↔		BORP EML MBOR VAC VAC I VAC II VBOR
	04	E36A E36B
	06	G12A G16A G38A G38B
	08	I13A I13B I13C I13D
	21B	X04Z
79.36.62↔		BORP EML MBOR VAC VAC I VAC II VBOR
	04	E36A E36B
	06	G12A G16A G38A G38B
	08	I13A I13B I13C I13D
	21B	X04Z
79.36.63↔		BORP EML MBOR VAC VAC I VAC II VBOR
	04	E36A E36B
	06	G12A G16A G38A G38B
	08	I13A I13B I13C I13D
	21B	X04Z
79.36.70↔		BORP EML MBOR VAC VAC I VAC II VBOR
	04	E36A E36B
	06	G12A G16A G38A G38B
	08	I13A I13B I13C I13D
	21B	X04Z
79.36.71↔		BORP EML MBOR VAC VAC I VAC II VBOR
	04	E36A E36B
	06	G12A G16A G38A G38B
	08	I13A I13B I13C I13D
	21B	X04Z
79.36.72↔		BORP EML MBOR VAC VAC I VAC II VBOR
	04	E36A E36B
	06	G12A G16A G38A G38B
	08	I13A I13B I13C I13D
	21B	X04Z
79.36.73↔		BORP EML MBOR VAC VAC I VAC II VBOR
	04	E36A E36B
	06	G12A G16A G38A G38B
	08	I13A I13B I13C I13D
	21B	X04Z
79.36.99↔		BORP EML MBOR VAC VAC I VAC II VBOR
	04	E36A E36B
	06	G12A G16A G38A G38B
	08	I13A I13B I13C I13D I30A I30B I30C
	21B	X04Z
79.37.10↔		BORP EML MBOR VAC VAC I VAC II VBOR
	04	E36A E36B
	06	G12A G16A G38A G38B
	08	I20A I20B I20C I20D I20G
	21B	X04Z
79.37.11↔		BORP EML MBOR VAC VAC I VAC II VBOR
	04	E36A E36B
	06	G12A G16A G38A G38B
	08	I20A I20B I20C I20D I20G
	21B	X04Z
79.37.20↔		BORP EML MBOR VAC VAC I VAC II VBOR
	04	E36A E36B
	06	G12A G16A G38A G38B
	08	I20A I20B I20C I20D I20G
	21B	X04Z
79.37.21↔		BORP EML MBOR VAC VAC I VAC II VBOR
	04	E36A E36B
	06	G12A G16A G38A G38B
	08	I20A I20B I20C I20D I20G
	21B	X04Z
79.37.30↔		BORP EML MBOR VAC VAC I VAC II VBOR
	04	E36A E36B
	06	G12A G16A G38A G38B
	08	I20A I20B I20C I20D I20G
	21B	X04Z
79.37.40↔		BORP EML MBOR VAC VAC I VAC II VBOR
	04	E36A E36B
	06	G12A G16A G38A G38B
	08	I20A I20B I20C I20D I20G
	21B	X04Z
79.37.99↔		BORP EML MBOR VAC VAC I VAC II VBOR
	04	E36A E36B
	06	G12A G16A G38A G38B
	08	I20A I20B I20C I20D I20G
	21B	X04Z
79.38↔		BORP EML MBOR VAC VAC I VAC II VBOR
	04	E36A E36B
	06	G12A G16A G38A G38B
	08	I20A I20B I20C I20D I20E I20F I20G
	21B	X04Z
79.39.00↔		BORP EML MBOR

CHOP	MDC	DRG
		VAC VAC I VAC II VBOR
	01	B03A B03B B03C
	04	E36A E36B
	06	G12A G16A G38A G38B
	08	I02A I02B I02C I08A I08B I28A I28B
	21B	X04Z X06A X06B X06C
79.39.10↔		BORP EML MBOR VAC VAC I VAC II VBOR
	04	E02A E02B E36A E36B
	06	G12A G16A G38A G38B
	08	I29A I29B I29C
	21B	X06A X06B X06C
79.39.11↔		BORP EML MBOR VAC VAC I VAC II VBOR
	04	E02A E02B E36A E36B
	06	G12A G16A G38A G38B
	08	I02A I02B I02C I08A I08B I29A I29B I29C
	21B	X06A X06B X06C
79.39.12↔		BORP EML MBOR VAC VAC I VAC II VBOR
	04	E02A E02B E36A E36B
	06	G12A G16A G38A G38B
	08	I29A I29B I29C
	21B	X06A X06B X06C
79.39.13↔		BORP EML MBOR VAC VAC I VAC II VBOR
	04	E02A E02B E36A E36B
	06	G12A G16A G38A G38B
	08	I29A I29B I29C
	21B	X06A X06B X06C
79.39.14↔		BORP EML MBOR VAC VAC I VAC II VBOR
	04	E02A E02B E36A E36B
	06	G12A G16A G38A G38B
	08	I02A I02B I02C I08A I08B I29A I29B I29C
	21B	X06A X06B X06C
79.39.15↔		BORP EML MBOR VAC VAC I VAC II VBOR
	04	E02A E02B E36A E36B
	06	G12A G16A G38A G38B
	08	I02A I02B I02C I08A I08B I29A I29B I29C
	21B	X06A X06B X06C
79.39.20↔		BORP EML MBOR VAC VAC I VAC II VBOR
	01	B03A B03B B03C
	04	E36A E36B
	06	G12A G16A G38A G38B
	08	I02A I02B I02C I08A I08B I08C
	21B	X04Z X06A X06B X06C
79.39.29↔		BORP EML MBOR VAC VAC I VAC II VBOR
	04	E36A E36B
	06	G12A G16A G38A G38B
	08	I02A I02B I02C I08A I08B I08C
	21B	X04Z X06A X06B X06C
79.39.40↔		BORP EML MBOR VAC VAC I VAC II VBOR
	04	E36A E36B
	06	G12A G16A G38A G38B
	08	I18A I18C I30A I30B I30C
	21B	X04Z
79.39.99↔		BORP MBOR VAC VAC I VAC II VBOR
	01	B03A B03B B03C
	04	E36A E36B
	06	G12A G16A G38A G38B
	08	I02A I02B I02C I08A I08B I28A I28B
	21B	X04Z X06A X06B X06C
79.40↔	08	I28A I28B
	21B	X06A X06B X06C
79.41↔	08	I28A I28B I28C
	21B	X06A X06B X06C
79.42↔	08	I28A I28B I28C
	21B	X06A X06B X06C
79.45↔	08	I28A I28B I28C
	21B	X04Z
79.46↔	08	I28A I28B I28C
	21B	X04Z
79.49↔	08	I28A I28B I28C
	21B	X06A X06B X06C
79.50↔		BORP MBOR VAC VAC I VAC II VBOR
	04	E36A E36B
	06	G12A G16A G38A G38B
	08	I13A I13B I13C I13D I28A I28B
	21B	X06A X06B X06C
79.51↔		BORP EML MBOR VAC VAC I VAC II VBOR
	04	E36A E36B
	06	G12A G16A G38A G38B
	08	I13A I13B I13C I13D
	21B	X06A X06B X06C
79.52.00↔		BORP EML MBOR VAC VAC I VAC II VBOR
	04	E36A E36B
	06	G12A G16A G38A G38B
	08	I31A I31B
	21B	X06A X06B X06C
79.52.10↔		BORP EML MBOR VAC VAC I VAC II VBOR
	04	E36A E36B
	06	G12A G16A G38A G38B
	08	I31A I31B
	21B	X06A X06B X06C
79.52.20↔		BORP EML MBOR VAC VAC I VAC II VBOR
	04	E36A E36B
	06	G12A G16A G38A G38B
	08	I31A I31B
	21B	X06A X06B X06C
79.52.99↔		BORP EML MBOR VAC VAC I VAC II VBOR
	04	E36A E36B
	06	G12A G16A G38A G38B
	08	I31A I31B
	21B	X06A X06B X06C
79.55↔		BORP EML MBOR VAC VAC I VAC II VBOR
	04	E36A E36B
	06	G12A G16A G38A G38B
	08	I02A I02B I02C I08A I08B I08C
	21B	X04Z
79.56.00↔		BORP EML MBOR VAC VAC I VAC II VBOR
	04	E36A E36B
	06	G12A G16A G38A G38B
	08	I13A I13B I13C I13D
	21B	X04Z
79.56.10↔		BORP EML MBOR VAC VAC I VAC II VBOR
	04	E36A E36B
	06	G12A G16A G38A G38B
	08	I13A I13B I13C I13D
	21B	X04Z
79.56.11↔		BORP EML MBOR VAC VAC I VAC II VBOR
	04	E36A E36B
	06	G12A G16A G38A G38B
	08	I13A I13B I13C I13D
	21B	X04Z
79.56.20↔		BORP EML MBOR

PROC

CHOP	MDC	DRG
		VAC VAC I VAC II VBOR
	04	E36A E36B
	06	G12A G16A G38A G38B
	08	I13A I13B I13C I13D
	21B	X04Z
79.56.21↔		BORP EML MBOR VAC VAC I VAC II VBOR
	04	E36A E36B
	06	G12A G16A G38A G38B
	08	I13A I13B I13C I13D
	21B	X04Z
79.56.99↔		BORP EML MBOR VAC VAC I VAC II VBOR
	04	E36A E36B
	06	G12A G16A G38A G38B
	08	I13A I13B I13C I13D
	21B	X04Z
79.59.00↔		BORP MBOR VAC VAC I VAC II VBOR
	04	E36A E36B
	06	G12A G16A G38A G38B
	08	I18A I18B I18C
	21B	X04Z
79.59.10↔		BORP EML MBOR VAC VAC I VAC II VBOR
	04	E36A E36B
	06	G12A G16A G38A G38B
	08	I18A I18B I18C I30A I30B I30C
	21B	X04Z
79.59.99↔		BORP MBOR VAC VAC I VAC II VBOR
	04	E36A E36B
	06	G12A G16A G38A G38B
	08	I18A I18B I18C
	21B	X04Z
79.61↔		BORP EML MBOR VAC VAC I VAC II VBOR
	04	E36A E36B
	05	F04Z F13A F13B
	06	G12A G16A G38A G38B
	08	I02A I02B I02C I12A I12B I12C I13A I13B I13C I13D
	21B	X06A X06B X06C
	Prä	B61B B61C B61D
79.62↔		BORP EML MBOR VAC VAC I VAC II VBOR
	04	E36A E36B
	05	F04Z F13A F13B
	06	G12A G16A G38A G38B
	08	I02A I02B I02C I12A I12B I12C I31A I31B
	21B	X06A X06B X06C
	Prä	B61B B61C B61D
79.63↔		BORP EML MBOR VAC VAC I VAC II VBOR
	04	E36A E36B
	05	F04Z F13A F13B
	06	G12A G16A G38A G38B
	08	I02A I02B I02C I12A I12B I12C I32A I32B I32C I32D I32E I32F
	21B	X05Z
	Prä	B61B B61C B61D
79.64↔		BORP EML MBOR VAC VAC I VAC II VBOR
	04	E36A E36B
	05	F04Z F13A F13B
	06	G12A G16A G38A G38B
	08	I02A I02B I02C I12A I12B I12C I32A I32B I32C I32D I32E I32F
	10	K09A K09B
	21B	X05Z X06A X06B X06C
	Prä	B61B B61C B61D
79.65↔		BORP EML MBOR VAC VAC I VAC II VBOR
	04	E36A E36B
	05	F04Z F13A F13B
	06	G12A G16A G38A G38B
	08	I02A I02B I02C I08A I08B I08C
	21B	X04Z
79.66↔		BORP EML MBOR VAC VAC I VAC II VBOR
	04	E36A E36B
	05	F04Z F13A F13B
	06	G12A G16A G38A G38B
	08	I02A I02B I02C I12A I12B I12C I13A I13B I13C I13D
	21B	X04Z
	Prä	B61B B61C B61D
79.67↔		BORP EML MBOR VAC VAC I VAC II VBOR
	04	E36A E36B
	05	F04Z F13A F13B F13C
	06	G12A G16A G38A G38B
	08	I02A I02B I02C I12A I12B I12C I20A I20B I20C I20D I20E I20F I20G
	21B	X04Z
	Prä	B61B B61C B61D
79.68↔		BORP EML MBOR VAC VAC I VAC II VBOR
	04	E36A E36B
	05	F04Z F13A F13B
	06	G12A G16A G38A G38B
	08	I02A I02B I02C I12A I12B I12C I20A I20B I20C I20D I20E I20F I20G
	10	K09A K09B
	21B	X04Z
	Prä	B61B B61C B61D
79.69↔		BORP MBOR VAC VAC I VAC II VBOR
	04	E36A E36B
	06	G12A G16A G38A G38B
	08	I02A I02B I02C I12A I12B I12C I28A I28B I28C
	21B	X06A X06B X06C
	Prä	B61B B61C B61D
79.81.00↔		BORP EML MBOR VAC VAC I VAC II VBOR
	04	E36A E36B
	06	G12A G16A G38A G38B
	08	I29A I29B I29C
	21B	X06A X06B X06C
79.81.10↔		BORP EML MBOR VAC VAC I VAC II VBOR
	04	E36A E36B
	06	G12A G16A G38A G38B
	08	I29A I29B I29C
	21B	X06A X06B X06C
79.81.20↔		BORP EML MBOR VAC VAC I VAC II VBOR
	04	E36A E36B
	06	G12A G16A G38A G38B
	08	I29A I29B I29C
	21B	X06A X06B X06C
79.81.99↔		BORP EML MBOR VAC VAC I VAC II VBOR
	04	E36A E36B
	06	G12A G16A G38A G38B
	08	I29A I29B I29C
	21B	X06A X06B X06C
79.82↔		BORP EML MBOR VAC VAC I VAC II VBOR
	04	E36A E36B
	06	G12A G16A G38A G38B
	08	I31A I31B
	21B	X06A X06B X06C
79.83.00↔		BORP EML MBOR VAC VAC I VAC II VBOR
	04	E36A E36B
	06	G12A G16A G38A

CHOP	MDC	DRG
		G38B
	08	I02A I02B I02C I32A I32B I32C I32D I32E I32F
	21B	X05Z
79.83.10↔		BORP EML MBOR VAC VAC I VAC II VBOR
	04	E36A E36B
	06	G12A G16A G38A G38B
	08	I02A I02B I02C I32A I32B I32C I32D I32E I32F
	21B	X05Z
79.83.99↔		BORP EML MBOR VAC VAC I VAC II VBOR
	04	E36A E36B
	06	G12A G16A G38A G38B
	08	I02A I02B I02C I32A I32B I32C I32D I32E I32F
	21B	X05Z
79.84↔		BORP EML MBOR VAC VAC I VAC II VBOR
	04	E36A E36B
	06	G12A G16A G38A G38B
	08	I02A I02B I02C I32A I32B I32C I32D I32E I32F
	21B	X05Z
79.85↔		BORP EML MBOR VAC VAC I VAC II VBOR
	04	E36A E36B
	06	G12A G16A G38A G38B
	08	I02A I02B I02C I08A I08B I08C
	21B	X04Z
79.86.00↔		BORP EML MBOR VAC VAC I VAC II VBOR
	04	E36A E36B
	06	G12A G16A G38A G38B
	08	I18A I18B I18C I30A I30B I30C
	21B	X04Z
79.86.10↔		BORP EML MBOR VAC VAC I VAC II VBOR
	04	E36A E36B
	06	G12A G16A G38A G38B
	08	I18A I18B I18C I30A I30B I30C
	21B	X04Z
79.86.19↔		BORP EML MBOR VAC VAC I VAC II VBOR
	04	E36A E36B
	06	G12A G16A G38A G38B
	08	I18A I18B I18C I30A I30B I30C
	21B	X04Z
79.86.99↔		BORP EML MBOR VAC VAC I VAC II VBOR
	04	E36A E36B
	06	G12A G16A G38A G38B
	08	I18A I18B I18C I30A I30B I30C
	21B	X04Z
79.87.10↔		BORP EML MBOR VAC VAC I VAC II VBOR
	04	E36A E36B
	06	G12A G16A G38A G38B
	08	I20A I20B I20C I20D I20G
	21B	X04Z
79.87.20↔		BORP EML MBOR VAC VAC I VAC II VBOR
	04	E36A E36B
	06	G12A G16A G38A G38B
	08	I20A I20B I20C I20D I20G
	21B	X04Z
79.87.99↔		BORP EML MBOR VAC VAC I VAC II VBOR
	04	E36A E36B
	06	G12A G16A G38A G38B
	08	I20A I20B I20C I20D I20G
	21B	X04Z
79.88.10↔		BORP EML MBOR VAC VAC I VAC II VBOR
	04	E36A E36B
	06	G12A G16A G38A G38B
	08	I20A I20B I20C I20D I20G
	21B	X04Z
79.88.20↔		BORP EML MBOR VAC VAC I VAC II VBOR
	04	E36A E36B
	06	G12A G16A G38A G38B
	08	I20A I20B I20C I20D I20G
	21B	X04Z
79.88.99↔		BORP EML MBOR VAC VAC I VAC II VBOR
	04	E36A E36B
	06	G12A G16A G38A G38B
	08	I20A I20B I20C I20D I20G
	21B	X04Z
79.89.00↔		BORP MBOR VAC VAC I VAC II VBOR
	01	B03A B03B B03C
	04	E36A E36B
	06	G12A G16A G38A G38B
	08	I02A I02B I02C I08A I08B I28A I28B I28C
	21B	X04Z X06A X06B X06C
79.89.10↔		BORP EML MBOR VAC VAC I VAC II VBOR
	04	E36A E36B
	06	G12A G16A G38A G38B
	08	I02A I02B I02C I08A I08B I29A I29B I29C
	21B	X06A X06B X06C
79.89.20↔		BORP EML MBOR VAC VAC I VAC II VBOR
	04	E36A E36B
	06	G12A G16A G38A G38B
	08	I02A I02B I02C I08A I08B I08C
	21B	X04Z X06A X06B X06C
79.89.30↔		BORP EML MBOR VAC VAC I VAC II VBOR
	04	E36A E36B
	06	G12A G16A G38A G38B
	08	I02A I02B I02C I08A I08B I08C
	21B	X04Z X06A X06B X06C
79.89.99↔		BORP MBOR VAC VAC I VAC II VBOR
	01	B03A B03B B03C
	04	E36A E36B
	06	G12A G16A G38A G38B
	08	I02A I02B I02C I08A I08B I28A I28B I28C
	21B	X04Z X06A X06B X06C
7A.11.11‡↔		AKBB
	01	B60A
	16	Q86A
7A.11.12↔	01	B17A B17B
	04	E02A E02B
	05	F04Z F13A F13B F13C
	08	I18A I18B I18C
	09	J02A J02B J03A J03B J04Z J11A J11B
	10	K09A K09B
	11	L09A L09B
	12	M06Z M09A M09B M37Z
	16	Q03Z
	21B	X04Z X06A X06B X06C
7A.12.11↔	08	I18A I18B I18C
	21B	X06A X06B X06C
7A.12.21↔	04	E02A E02B E02C
	08	I10A I10B I10C
	21A	W01A W01B W01C
	21B	X06A X06B X06C

PROC

PROC

CHOP	MDC	DRG
7A.21↔		BORP EML MBOR VAC VAC I VAC II VBOR
	01	B03A B03B B03C
	04	E36A E36B
	06	G12A G16A G38A G38B
	08	I02A I02B I02C I10A I10B I10C I12A I12B I12C
	09	J02A J02B J03A J03B J04Z J11A J11B
	21A	W01A W01B W01C
	21B	X06A X06B X06C
	Prä	B61B B61C B61D
7A.22↔	Prä	B61B B61C B61D
	05	F04Z F13A F13B
	08	I02A I02B I02C I12A I12B I12C I23A I23B I23C
	21B	X04Z X05Z X06A X06B X06C
7A.23↔	01	B17A B17B
	04	E02A E02B
	05	F04Z F13A F13B F13C
	08	I18A I18B I18C
	09	J02A J02B J03A J03B J04Z J11A J11B
	10	K09A K09B
	11	L09A L09B
	12	M06Z M09A M09B M37Z
	16	Q03Z
	21B	X04Z X06A X06B X06C
7A.25↔	01	B17A B17B
	04	E02A E02B
	05	F04Z F13A F13B F13C
	08	I18A I18B I18C
	09	J02A J02B J03A J03B J04Z J11A J11B
	10	K09A K09B
	11	L09A L09B
	12	M06Z M09A M09B M37Z
	16	Q03Z
	21B	X04Z X06A X06B X06C
7A.27↔		BORP EML MBOR VAC VBOR
	01	B03A B03B B03C
	04	E36A E36B
	06	G12A G16A G38A G38B
	08	I02A I02B I02C I10A I10B I10C I12A I12B I12C
	21A	W01A W01B W01C
	21B	X06A X06B X06C
	Prä	B61B B61C B61D
7A.28.11↔		BORP EML MBOR VAC VBOR
	01	B03A B03B B03C
	04	E36A E36B
	06	G12A G16A G38A G38B
	08	I02A I02B I02C I10A I10B I10C I12A I12B I12C
	13	N11A N11B
	21A	W01A W01B W01C
	21B	X06A X06B X06C
	Prä	B61B B61C B61D
7A.28.21↔		BORP EML MBOR VAC VBOR
	01	B03A B03B B03C
	04	E36A E36B
	06	G12A G16A G38A G38B
	08	I02A I02B I02C I10A I10B I10C I12A I12B I12C
	13	N11A N11B
	21A	W01A W01B W01C
	21B	X06A X06B X06C
	Prä	B61B B61C B61D
7A.28.31↔		BORP EML MBOR VAC VAC I VAC II VBOR
	01	B03A B03B B03C
	04	E36A E36B
	06	G12A G16A G38A G38B
	08	I02A I02B I02C I08A I08B I10A I10B I10C I11Z I13A
	21A	W01A W01B W01C
	21B	X06A X06B X06C
7A.28.41↔		BORP EML MBOR VAC VAC I VAC II VBOR
	01	B03A B03B B03C
	04	E36A E36B
	06	G12A G16A G38A G38B
	08	I02A I02B I02C I08A I08B I10A I10B I10C I11Z I13A
	21A	W01A W01B W01C
	21B	X06A X06B X06C
7A.28.51↔		BORP EML KORP MBOR MKOR VAC VAC I VAC II VBOR VKOR
	01	B01A B02A B02B B20A B20B B20C
	04	E36A E36B
	06	G12A G16A G38A G38B
	08	I02A I02B I02C I10A I10B I12A I12B I12C
	21A	W01A W01B W01C
	21B	X06A X06B X06C
	Prä	B61B B61C B61D
7A.28.61↔		BORP EML KORP MBOR MKOR VAC VAC I VAC II VBOR VKOR
	01	B01A B02A B02B B20A B20B B20C
	04	E36A E36B
	06	G12A G16A G38A G38B
	08	I02A I02B I02C I10A I10B I12A I12B I12C
	21A	W01A W01B W01C
	21B	X06A X06B X06C
	Prä	B61B B61C B61D
7A.29↔		BORP EML MBOR VAC VBOR
	01	B03A B03B B03C
	04	E36A E36B
	06	G12A G16A G38A G38B
	08	I02A I02B I02C I10A I10B I10C I12A I12B I12C
	13	N11A N11B
	21A	W01A W01B W01C
	21B	X06A X06B X06C
	Prä	B61B B61C B61D
7A.31↔		BORP EML MBOR VAC VAC I VAC II VBOR
	01	B03A B03B B03C
	04	E36A E36B
	06	G12A G16A G38A G38B
	08	I02A I02B I02C I10A I10B I10C I12A I12B I12C
	21A	W01A W01B W01C
	21B	X06A X06B X06C
	Prä	B61B B61C B61D
7A.32.11↔		BORP EML MBOR VAC VAC I VAC II VBOR
	01	B03A B03B B03C
	04	E36A E36B
	06	G12A G16A G38A G38B
	08	I10A I10B I10C
	21A	W01A W01B W01C
	21B	X06A X06B X06C
7A.32.12↔		BORP EML MBOR VAC VAC I VAC II VBOR
	01	B03A B03B B03C
	04	E36A E36B
	06	G12A G16A G38A G38B
	08	I10A I10B I10C
	21A	W01A W01B W01C
	21B	X06A X06B X06C
7A.32.13↔		BORP EML MBOR VAC VAC I VAC II VBOR
	01	B03A B03B B03C
	04	E36A E36B
	06	G12A G16A G38A G38B
	08	I10A I10B I10C
	21A	W01A W01B W01C
	21B	X06A X06B X06C
7A.3A↔		BORP EML MBOR VAC VAC I VAC II VBOR
	01	B03A B03B B03C
	04	E36A E36B
	06	G12A G16A G38A G38B

CHOP	MDC	DRG
	08	I02A I02B I02C
		I10A I10B I10C
		I12A I12B I12C
	21A	W01A W01B W01C
	21B	X06A X06B X06C
	Prä	B61B B61C B61D
7A.42.11↔		BORP EML MBOR
		VAC VAC I VAC II
		VBOR
	01	B03A B03B B03C
	04	E36A E36B
	06	G12A G16A G33Z
		G38A G38B G38C
	07	H33Z
	08	I10A I10B I10C
	09	J01A J01B
	11	L33Z
	21A	W01A W01B W01C
	21B	X06A X06B X06C
7A.42.12↔		BORP EML MBOR
		VAC VAC I VAC II
		VBOR
	01	B03A B03B B03C
	04	E36A E36B
	06	G12A G16A G33Z
		G38A G38B G38C
	07	H33Z
	08	I10A I10B I10C
	09	J01A J01B
	11	L33Z
	21A	W01A W01B W01C
	21B	X06A X06B X06C
7A.42.13↔		BORP EML MBOR
		VAC VAC I VAC II
		VBOR
	01	B03A B03B B03C
	04	E36A E36B
	06	G12A G16A G33Z
		G38A G38B G38C
	07	H33Z
	08	I10A I10B I10C
	09	J01A J01B
	11	L33Z
	21A	W01A W01B W01C
	21B	X06A X06B X06C
7A.42.14↔		BORP EML MBOR
		VAC VAC I VAC II
		VBOR
	01	B03A B03B B03C
	04	E36A E36B
	06	G12A G16A G33Z
		G38A G38B G38C
	07	H33Z
	08	I10A I10B I10C
	09	J01A J01B
	11	L33Z
	21A	W01A W01B W01C
	21B	X06A X06B X06C
7A.43.11↔		BORP EML MBOR
		VAC VAC I VAC II
		VBOR
	01	B03A B03B B03C
	04	E36A E36B
	06	G12A G16A G33Z
		G38A G38B G38C
	07	H33Z
	08	I10A I10B I10C
	11	L33Z
	21A	W01A W01B W01C
	21B	X06A X06B X06C

CHOP	MDC	DRG
		X07A X07B
7A.43.12↔		BORP EML MBOR
		VAC VAC I VAC II
		VBOR
	01	B03A B03B B03C
	04	E36A E36B
	06	G12A G16A G33Z
		G38A G38B G38C
	07	H33Z
	08	I10A I10B I10C
	11	L33Z
	21A	W01A W01B W01C
	21B	X06A X06B X06C
		X07A X07B
7A.43.13↔		BORP EML MBOR
		VAC VAC I VAC II
		VBOR
	01	B03A B03B B03C
	04	E36A E36B
	06	G12A G16A G33Z
		G38A G38B G38C
	07	H33Z
	08	I10A I10B I10C
	11	L33Z
	21A	W01A W01B W01C
	21B	X06A X06B X06C
		X07A X07B
7A.43.14↔		BORP EML MBOR
		VAC VAC I VAC II
		VBOR
	01	B03A B03B B03C
	04	E36A E36B
	06	G12A G16A G33Z
		G38A G38B G38C
	07	H33Z
	08	I10A I10B I10C
	11	L33Z
	21A	W01A W01B W01C
	21B	X06A X06B X06C
		X07A X07B
7A.44.21↔		BORP EML MBOR
		VAC VAC I VAC II
		VBOR
	01	B01A B02A B02B
		B03A B03B B03C
		B20A B20B B20C
	04	E36A E36B
	06	G12A G16A G33Z
		G38A G38B G38C
	07	H33Z
	08	I10A I10B I10C
	09	J01A J01B
	11	L33Z
	21A	W01A W01B W01C
	21B	X06A X06B X06C
		X07A X07B
7A.44.22↔		BORP EML MBOR
		VAC VAC I VAC II
		VBOR
	01	B01A B02A B02B
		B03A B03B B03C
		B20A B20B B20C
	04	E36A E36B
	06	G12A G16A G33Z
		G38A G38B G38C
	07	H33Z
	08	I10A I10B I10C
	09	J01A J01B
	11	L33Z
	21A	W01A W01B W01C

CHOP	MDC	DRG
	21B	X06A X06B X06C
		X07A X07B
7A.44.23↔		BORP EML MBOR
		VAC VAC I VAC II
		VBOR
	01	B01A B02A B02B
		B03A B03B B03C
		B20A B20B B20C
	04	E36A E36B
	06	G12A G16A G33Z
		G38A G38B G38C
	07	H33Z
	08	I10A I10B
	09	J01A J01B
	11	L33Z
	21A	W01A W01B W01C
	21B	X06A X06B X06C
		X07A X07B
7A.44.24↔		BORP EML MBOR
		VAC VAC I VAC II
		VBOR
	01	B01A B02A B02B
		B03A B03B B03C
		B20A B20B B20C
	04	E36A E36B
	06	G12A G16A G33Z
		G38A G38B G38C
	07	H33Z
	08	I10A I10B
	09	J01A J01B
	11	L33Z
	21A	W01A W01B W01C
	21B	X06A X06B X06C
		X07A X07B
7A.44.31↔		BORP EML MBOR
		VAC VAC I VAC II
		VBOR
	01	B01A B02A B02B
		B03A B03B B03C
		B20A B20B B20C
	04	E36A E36B
	06	G12A G16A G33Z
		G38A G38B G38C
	07	H33Z
	08	I10A I10B I10C
	09	J01A J01B
	11	L33Z
	21A	W01A W01B W01C
	21B	X06A X06B X06C
		X07A X07B
7A.44.32↔		BORP EML MBOR
		VAC VAC I VAC II
		VBOR
	01	B01A B02A B02B
		B03A B03B B03C
		B20A B20B B20C
	04	E36A E36B
	06	G12A G16A G33Z
		G38A G38B G38C
	07	H33Z
	08	I10A I10B I10C
	09	J01A J01B
	11	L33Z
	21A	W01A W01B W01C
	21B	X06A X06B X06C
		X07A X07B
7A.44.33↔		BORP EML MBOR
		VAC VAC I VAC II
		VBOR
	01	B01A B02A B02B

PROC

PROC

CHOP	MDC	DRG
		B03A B03B B03C B20A B20B B20C
	04	E36A E36B
	06	G12A G16A G33Z G38A G38B G38C
	07	H33Z
	08	I10A I10B
	09	J01A J01B
	11	L33Z
	21A	W01A W01B W01C
	21B	X06A X06B X06C X07A X07B
7A.44.34↔		BORP EML MBOR VAC VAC I VAC II VBOR
	01	B01A B02A B02B B03A B03B B03C B20A B20B B20C
	04	E36A E36B
	06	G12A G16A G33Z G38A G38B G38C
	07	H33Z
	08	I10A I10B
	09	J01A J01B
	11	L33Z
	21A	W01A W01B W01C
	21B	X06A X06B X06C X07A X07B
7A.44.91↔		BORP EML MBOR VAC VAC I VAC II VBOR
	01	B01A B02A B02B B03A B03B B03C B20A B20B B20C
	04	E36A E36B
	06	G12A G16A G33Z G38A G38B G38C
	07	H33Z
	08	I10A I10B I10C
	09	J01A J01B
	11	L33Z
	21A	W01A W01B W01C
	21B	X06A X06B X06C X07A X07B
7A.44.92↔		BORP EML MBOR VAC VAC I VAC II VBOR
	01	B01A B02A B02B B03A B03B B03C B20A B20B B20C
	04	E36A E36B
	06	G12A G16A G33Z G38A G38B G38C
	07	H33Z
	08	I10A I10B I10C
	09	J01A J01B
	11	L33Z
	21A	W01A W01B W01C
	21B	X06A X06B X06C X07A X07B
7A.44.93↔		BORP EML MBOR VAC VAC I VAC II VBOR
	01	B01A B02A B02B B03A B03B B03C B20A B20B B20C
	04	E36A E36B
	06	G12A G16A G33Z G38A G38B G38C
	07	H33Z
	08	I10A I10B
	09	J01A J01B
	11	L33Z
	21A	W01A W01B W01C
	21B	X06A X06B X06C X07A X07B
7A.44.94↔		BORP EML MBOR VAC VAC I VAC II VBOR
	01	B01A B02A B02B B03A B03B B03C B20A B20B B20C
	04	E36A E36B
	06	G12A G16A G33Z G38A G38B G38C
	07	H33Z
	08	I10A I10B
	09	J01A J01B
	11	L33Z
	21A	W01A W01B W01C
	21B	X06A X06B X06C X07A X07B
7A.51.12↔		BORP KORP MBOR MKOR VAC VAC I VAC II VB VBOR VKOR
	04	E36A E36B
	06	G12A G16A G38A G38B
	08	I02A I02B I02C I08A I08B
	21B	X01A X01B X04Z X05Z X06A X06B X06C X07A X07B
	22	Y02A Y02B
7A.51.13↔		BORP EML MBOR VAC VBOR
	01	B03A B03B B03C
	04	E36A E36B
	06	G12A G16A G38A G38B
	08	I02A I02B I02C I10A I10B I10C I12A I12B I12C
	09	J02A J02B J03A J03B J04Z J11A J11B
	21A	W01A W01B W01C
	21B	X06A X06B X06C
	Prä	B61B B61C B61D
7A.61.11↔		BORP EML MBOR VAC VAC I VAC II VBOR
	01	B03A B03B B03C
	04	E36A E36B
	06	G12A G16A G38A G38B
	08	I45A I45B
	09	J01A J01B
	21B	X06A X06B X06C
7A.61.21↔		BORP EML MBOR VAC VAC I VAC II VBOR
	01	B03A B03B B03C
	04	E36A E36B
	06	G12A G16A G38A G38B
	08	I45A I45B
	09	J01A J01B
	21B	X06A X06B X06C
7A.61.31↔	01	B03A B03B B03C
	08	I10A I10B I10C
	09	J11A J11B
	10	K09A K09B
	21A	W01A W01B W01C
	21B	X06A X06B X06C
7A.61.41↔	01	B03A B03B B03C
	08	I10A I10B I10C
	09	J11A J11B
	10	K09A K09B
	21A	W01A W01B W01C
	21B	X06A X06B X06C
7A.62.11↔		BORP EML MBOR VAC VAC I VAC II VBOR
	01	B03A B03B B03C
	04	E36A E36B
	06	G12A G16A G38A G38B
	08	I45A I45B
	09	J01A J01B
	21B	X06A X06B X06C
7A.62.21↔		BORP EML MBOR VAC VAC I VAC II VBOR
	01	B03A B03B B03C
	04	E36A E36B
	06	G12A G16A G38A G38B
	08	I45A I45B
	09	J01A J01B
	21B	X06A X06B X06C
7A.62.31↔	01	B03A B03B B03C
	08	I10A I10B I10C
	09	J11A J11B
	10	K09A K09B
	21A	W01A W01B W01C
	21B	X06A X06B X06C
7A.62.41↔	01	B03A B03B B03C
	08	I10A I10B I10C
	09	J11A J11B
	10	K09A K09B
	21A	W01A W01B W01C
	21B	X06A X06B X06C
7A.63.11↔		BORP EML KORP MBOR MKOR VAC VAC I VAC II VBOR VKOR
	01	B03A B03B B03C
	04	E36A E36B
	06	G12A G16A G33Z G38A G38B G38C
	07	H33Z
	08	I02A I02B I02C I06A I06B I06C I09A I09B I09C I09D I09E I09F I10A I10B I10C
	09	J01A J01B
	11	L33Z
	21A	W01A W01B W01C
	21B	X06A X06B X06C X07A X07B
	Prä	B61A B61B B61C
7A.63.21↔		BORP EML KORP MBOR MKOR VAC VAC I VAC II VBOR VKOR
	01	B03A B03B B03C
	04	E36A E36B

CHOP	MDC	DRG
	06	G12A G16A G33Z G38A G38B G38C
	07	H33Z
	08	I02A I02B I02C I06A I06B I06C I09A I09B I09C I09D I09E I09F I10A I10B
	09	J01A J01B
	11	L33Z
	21A	W01A W01B W01C
	21B	X06A X06B X06C X07A X07B
	Prä	B61A B61B B61C
7A.63.31↔	01	B03A B03B B03C
	08	I10A I10B I10C
	09	J11A J11B
	10	K09A K09B
	21A	W01A W01B W01C
	21B	X06A X06B X06C
7A.63.41↔	01	B03A B03B B03C
	08	I10A I10B I10C
	09	J11A J11B
	10	K09A K09B
	21A	W01A W01B W01C
	21B	X06A X06B X06C
7A.64.11↔		BORP EML KORP MBOR MKOR VAC VAC I VAC II VBOR VKOR
	01	B03A B03B B03C
	04	E36A E36B
	06	G12A G16A G33Z G38A G38B G38C
	07	H33Z
	08	I02A I02B I02C I06A I06B I06C I09A I09B I09C I09D I09E I09F I10A I10B I10C
	09	J01A J01B
	11	L33Z
	21A	W01A W01B W01C
	21B	X06A X06B X06C X07A X07B
	Prä	B61A B61B B61C
7A.64.21↔		BORP EML KORP MBOR MKOR VAC VAC I VAC II VBOR VKOR
	01	B03A B03B B03C
	04	E36A E36B
	06	G12A G16A G33Z G38A G38B G38C
	07	H33Z
	08	I02A I02B I02C I06A I06B I06C I09A I09B I09C I09D I09E I09F I10A I10B
	09	J01A J01B
	11	L33Z
	21A	W01A W01B W01C
	21B	X06A X06B X06C X07A X07B
	Prä	B61A B61B B61C
7A.64.31↔	01	B03A B03B B03C
	08	I10A I10B I10C
	09	J11A J11B
	10	K09A K09B
	21A	W01A W01B W01C
	21B	X06A X06B X06C
7A.64.41↔	01	B03A B03B B03C
	08	I10A I10B I10C
	09	J11A J11B
	10	K09A K09B
	21A	W01A W01B W01C
	21B	X06A X06B X06C
7A.65.11↔		BORP EML MBOR VAC VAC I VAC II VBOR
	01	B03A B03B B03C
	04	E36A E36B
	06	G12A G16A G33Z G38A G38B G38C
	07	H33Z
	08	I02A I02B I02C I06A I06B I06C I09A I09B I09C I09D I09E I09F I10A I10B I10C
	09	J01A J01B
	11	L33Z
	21A	W01A W01B W01C
	21B	X06A X06B X06C X07A X07B
	Prä	B61A B61B B61C
7A.65.21↔		BORP EML MBOR VAC VAC I VAC II VBOR
	01	B03A B03B B03C
	04	E36A E36B
	06	G12A G16A G33Z G38A G38B G38C
	07	H33Z
	08	I02A I02B I02C I06A I06B I06C I09A I09B I09C I09D I09E I09F I10A I10B
	09	J01A J01B
	11	L33Z
	21A	W01A W01B W01C
	21B	X06A X06B X06C X07A X07B
	Prä	B61A B61B B61C
7A.65.31↔	01	B03A B03B B03C
	08	I10A I10B I10C
	09	J11A J11B
	10	K09A K09B
	21A	W01A W01B W01C
	21B	X06A X06B X06C
7A.65.41↔	01	B03A B03B B03C
	08	I10A I10B I10C
	09	J11A J11B
	10	K09A K09B
	21A	W01A W01B W01C
	21B	X06A X06B X06C
7A.66.11↔		BORP EML MBOR VAC VAC I VAC II VBOR
	01	B03A B03B B03C
	04	E36A E36B
	06	G12A G16A G38A G38B
	08	I10A I10B I10C
	21A	W01A W01B W01C
	21B	X06A X06B X06C
7A.66.21↔		BORP EML MBOR VAC VAC I VAC II VBOR
	01	B03A B03B B03C
	04	E36A E36B
	06	G12A G16A G38A G38B
	08	I10A I10B I10C
	21A	W01A W01B W01C
	21B	X06A X06B X06C
7A.66.31↔		BORP EML MBOR VAC VAC I VAC II VBOR
	01	B03A B03B B03C
	04	E36A E36B
	06	G12A G16A G38A G38B
	08	I10A I10B I10C
	21A	W01A W01B W01C
	21B	X06A X06B X06C
7A.66.41↔		BORP EML MBOR VAC VAC I VAC II VBOR
	01	B03A B03B B03C
	04	E36A E36B
	06	G12A G16A G38A G38B
	08	I10A I10B I10C
	21A	W01A W01B W01C
	21B	X06A X06B X06C
7A.67.11↔		BORP MBOR VAC VAC I VAC II VBOR
	04	E36A E36B
	06	G12A G16A G38A G38B
	08	I10A I10B I10C
	21A	W01A W01B W01C
7A.67.21↔		BORP EML MBOR VAC VAC I VAC II VBOR
	01	B03A B03B B03C
	04	E36A E36B
	06	G12A G16A G38A G38B
	08	I10A I10B
	21A	W01A W01B W01C
	21B	X06A X06B X06C
7A.67.31↔	01	B03A B03B B03C
	08	I10A I10B I10C
	09	J11A J11B
	10	K09A K09B
	21A	W01A W01B W01C
	21B	X06A X06B X06C
7A.67.41↔	01	B03A B03B B03C
	08	I10A I10B I10C
	09	J11A J11B
	10	K09A K09B
	21A	W01A W01B W01C
	21B	X06A X06B X06C
7A.71.11↔		BORP EML MBOR VAC VAC I VAC II VBOR
	01	B03A B03B B03C
	04	E36A E36B
	06	G12A G16A G33Z G38A G38B G38C
	07	H33Z
	08	I02A I02B I02C I09A I09B I09C I09D I09E
	09	J01A J01B
	11	L33Z

PROC

PROC

CHOP	MDC	DRG
	13	N11A N11B
	21A	W01A W01B W01C W60A
	21B	X06A X06B X06C X07A X07B
	Prä	A11A A11B A46C A46D B61A B61B B61C B61D
7A.71.12↔		BORP EML MBOR VAC VAC I VAC II VBOR
	01	B03A B03B B03C
	04	E36A E36B
	06	G12A G16A G33Z G38A G38B G38C
	07	H33Z
	08	I02A I02B I02C I09A I09B I09C I09D I09E
	09	J01A J01B
	11	L33Z
	13	N11A N11B
	21A	W01A W01B W01C W60A
	21B	X06A X06B X06C X07A X07B
	Prä	A11A A11B A46C A46D B61A B61B B61C B61D
7A.71.13↔		BORP EML KORP MBOR MKOR VAC VAC I VAC II VBOR VKOR
	01	B01A B02A B02B B03A B03B B03C B20A B20B B20C
	04	E36A E36B
	06	G12A G16A G33Z G38A G38B G38C
	07	H33Z
	08	I02A I02B I02C I06A I06B I06C I09A I09B I09C I09D I09E
	09	J01A J01B
	11	L33Z
	21A	W01A W01B W01C W60A
	21B	X06A X06B X06C X07A X07B
	Prä	A11A A11B A46C A46D B61A B61B B61C
7A.71.14↔		BORP EML KORP MBOR MKOR VAC VAC I VAC II VBOR VKOR
	01	B01A B02A B02B B03A B03B B03C B20A B20B B20C
	04	E36A E36B
	06	G12A G16A G33Z G38A G38B G38C
	07	H33Z
	08	I02A I02B I02C I06A I06B I06C I09A I09B I09C I09D I09E
	09	J01A J01B
	11	L33Z
	21A	W01A W01B W01C W60A
	21B	X06A X06B X06C X07A X07B
	Prä	A11A A11B A46C A46D B61A B61B B61C
7A.71.15↔		BORP EML KORP MBOR MKOR VAC VAC I VAC II VBOR VKOR
	01	B01A B02A B02B B03A B03B B03C B20A B20B B20C
	04	E36A E36B
	06	G12A G16A G33Z G38A G38B G38C
	07	H33Z
	08	I02A I02B I02C I06A I06B I06C I09A I09B I09C I09D I09E
	09	J01A J01B
	11	L33Z
	21A	W01A W01B W01C W60A
	21B	X06A X06B X06C X07A X07B
	Prä	A11A A11B A46C A46D B61A B61B B61C
7A.71.16↔		BORP EML KORP MBOR MKOR VAC VAC I VAC II VBOR VKOR
	01	B01A B02A B02B B03A B03B B03C B20A B20B B20C
	04	E36A E36B
	06	G12A G16A G33Z G38A G38B G38C
	07	H33Z
	08	I02A I02B I02C I06A I06B I06C I09A I09B I09C I09D I09E
	09	J01A J01B
	11	L33Z
	21A	W01A W01B W01C W60A
	21B	X06A X06B X06C X07A X07B
	Prä	A11A A11B A46C A46D B61A B61B B61C
7A.71.17↔		BORP EML KORP MBOR MKOR VAC VAC I VAC II VBOR VKOR
	01	B01A B02A B02B B03A B03B B03C B20A B20B B20C
	04	E36A E36B
	06	G12A G16A G33Z G38A G38B G38C
	07	H33Z
	08	I02A I02B I02C I06A I06B I06C I09A I09B I09C I09D I09E
	09	J01A J01B
	11	L33Z
	21A	W01A W01B W01C W60A
	21B	X06A X06B X06C X07A X07B
	Prä	A11A A11B A46C A46D B61A B61B B61C
7A.71.18↔		BORP EML KORP MBOR MKOR VAC VAC I VAC II VBOR VKOR
	01	B01A B02A B02B B03A B03B B03C B20A B20B B20C
	04	E36A E36B
	06	G12A G16A G33Z G38A G38B G38C
	07	H33Z
	08	I02A I02B I02C I06A I06B I09A I09B I09C I09D I09E
	09	J01A J01B
	11	L33Z
	21A	W01A W01B W01C W60A
	21B	X06A X06B X06C X07A X07B
	Prä	A11A A11B A46C A46D B61A B61B B61C
7A.71.1A↔		BORP EML KORP MBOR MKOR VAC VAC I VAC II VBOR VKOR
	01	B01A B02A B02B B03A B03B B03C B20A B20B B20C
	04	E36A E36B
	06	G12A G16A G33Z G38A G38B G38C
	07	H33Z
	08	I02A I02B I02C I06A I06B I09A I09B I09C I09D I09E
	09	J01A J01B
	11	L33Z
	21A	W01A W01B W01C W60A
	21B	X06A X06B X06C X07A X07B
	Prä	A11A A11B A46C A46D B61A B61B B61C
7A.71.1B↔		BORP EML KORP MBOR MKOR VAC VAC I VAC II VBOR VKOR
	01	B01A B02A B02B B03A B03B B03C B20A B20B B20C
	04	E36A E36B
	06	G12A G16A G33Z G38A G38B G38C
	07	H33Z
	08	I02A I02B I02C I06A I06B I09A

CHOP	MDC	DRG
		I09B I09C I09D I09E
	09	J01A J01B
	11	L33Z
	21A	W01A W01B W01C W60A
	21B	X06A X06B X06C X07A X07B
	Prä	A11A A11B A46C A46D B61A B61B B61C
7A.71.1C↔		BORP EML KORP MBOR MKOR VAC VAC I VAC II VBOR VKOR
	01	B01A B02A B02B B03A B03B B03C B20A B20B B20C
	04	E36A E36B
	06	G12A G16A G33Z G38A G38B G38C
	07	H33Z
	08	I02A I02B I02C I06A I06B I09A I09B I09C I09D I09E
	09	J01A J01B
	11	L33Z
	21A	W01A W01B W01C W60A
	21B	X06A X06B X06C X07A X07B
	Prä	A11A A11B A46C A46D B61A B61B B61C
7A.71.1D↔		BORP EML KORP MBOR MKOR VAC VAC I VAC II VBOR VKOR
	01	B01A B02A B02B B03A B03B B03C B20A B20B B20C
	04	E36A E36B
	06	G12A G16A G33Z G38A G38B G38C
	07	H33Z
	08	I02A I02B I02C I06A I06B I09A I09B I09C I09D I09E
	09	J01A J01B
	11	L33Z
	21A	W01A W01B W01C W60A
	21B	X06A X06B X06C X07A X07B
	Prä	A11A A11B A46C A46D B61A B61B B61C
7A.71.1E↔		BORP EML KORP MBOR MKOR VAC VAC I VAC II VBOR VKOR
	01	B01A B02A B02B B03A B03B B03C B20A B20B B20C
	04	E36A E36B
	06	G12A G16A G33Z G38A G38B G38C
	07	H33Z
	08	I02A I02B I02C I06A I06B I06C I09A I09B I09C I09D I09E
	09	J01A J01B
	11	L33Z
	21A	W01A W01B W01C W60A
	21B	X06A X06B X06C X07A X07B
	Prä	A11A A11B A46C A46D B61A B61B B61C
7A.71.1F↔		BORP EML KORP MBOR MKOR VAC VAC I VAC II VBOR VKOR
	01	B01A B02A B02B B03A B03B B03C B20A B20B B20C
	04	E36A E36B
	06	G12A G16A G33Z G38A G38B G38C
	07	H33Z
	08	I02A I02B I02C I06A I06B I09A I09B I09C I09D I09E
	09	J01A J01B
	11	L33Z
	21A	W01A W01B W01C W60A
	21B	X06A X06B X06C X07A X07B
	Prä	A11A A11B A46C A46D B61A B61B B61C
7A.71.21↔		BORP EML MBOR VAC VAC I VAC II VBOR
	01	B03A B03B B03C
	04	E36A E36B
	06	G12A G16A G33Z G38A G38B G38C
	07	H33Z
	08	I02A I02B I02C I09A I09B I09C I09D I09E I09F
	09	J01A J01B
	11	L33Z
	13	N11A N11B
	21A	W01A W01B W01C W60A
	21B	X06A X06B X06C X07A X07B
	Prä	A11A A11B A46C A46D B61A B61B B61C B61D
7A.71.22↔		BORP EML MBOR VAC VAC I VAC II VBOR
	01	B03A B03B B03C
	04	E36A E36B
	06	G12A G16A G33Z G38A G38B G38C
	07	H33Z
	08	I02A I02B I02C I09A I09B I09C I09D I09E I09F
	09	J01A J01B
	11	L33Z
	13	N11A N11B
	21A	W01A W01B W01C W60A
	21B	X06A X06B X06C X07A X07B
	Prä	A11A A11B A46C A46D B61A B61B B61C B61D
7A.71.23↔		BORP EML KORP MBOR MKOR VAC VAC I VAC II VBOR VKOR
	01	B01A B02A B02B B03A B03B B03C B20A B20B B20C
	04	E36A E36B
	06	G12A G16A G33Z G38A G38B G38C
	07	H33Z
	08	I02A I02B I02C I06A I06B I06C I09A I09B I09C I09D I09E
	09	J01A J01B
	11	L33Z
	21A	W01A W01B W01C W60A
	21B	X06A X06B X06C X07A X07B
	Prä	A11A A11B A46C A46D B61A B61B B61C
7A.71.24↔		BORP EML KORP MBOR MKOR VAC VAC I VAC II VBOR VKOR
	01	B01A B02A B02B B03A B03B B03C B20A B20B B20C
	04	E36A E36B
	06	G12A G16A G33Z G38A G38B G38C
	07	H33Z
	08	I02A I02B I02C I06A I06B I06C I09A I09B I09C I09D I09E
	09	J01A J01B
	11	L33Z
	21A	W01A W01B W01C W60A
	21B	X06A X06B X06C X07A X07B
	Prä	A11A A11B A46C A46D B61A B61B B61C
7A.71.25↔		BORP EML KORP MBOR MKOR VAC VAC I VAC II VBOR VKOR
	01	B01A B02A B02B B03A B03B B03C B20A B20B B20C
	04	E36A E36B
	06	G12A G16A G33Z G38A G38B G38C
	07	H33Z
	08	I02A I02B I02C I06A I06B I06C

PROC

PROC

CHOP	MDC	DRG
		I09A I09B I09C I09D I09E
	09	J01A J01B
	11	L33Z
	21A	W01A W01B W01C W60A
	21B	X06A X06B X06C X07A X07B
	Prä	A11A A11B A46C A46D B61A B61B B61C
7A.71.26↔		BORP EML KORP MBOR MKOR VAC VAC I VAC II VBOR VKOR
	01	B01A B02A B02B B03A B03B B03C B20A B20B B20C
	04	E36A E36B
	06	G12A G16A G33Z G38A G38B G38C
	07	H33Z
	08	I02A I02B I02C I06A I06B I06C I09A I09B I09C I09D I09E
	09	J01A J01B
	11	L33Z
	21A	W01A W01B W01C W60A
	21B	X06A X06B X06C X07A X07B
	Prä	A11A A11B A46C A46D B61A B61B B61C
7A.71.27↔		BORP EML KORP MBOR MKOR VAC VAC I VAC II VBOR VKOR
	01	B01A B02A B02B B03A B03B B03C B20A B20B B20C
	04	E36A E36B
	06	G12A G16A G33Z G38A G38B G38C
	07	H33Z
	08	I02A I02B I02C I06A I06B I06C I09A I09B I09C I09D I09E
	09	J01A J01B
	11	L33Z
	21A	W01A W01B W01C W60A
	21B	X06A X06B X06C X07A X07B
	Prä	A11A A11B A46C A46D B61A B61B B61C
7A.71.28↔		BORP EML KORP MBOR MKOR VAC VAC I VAC II VBOR VKOR
	01	B01A B02A B02B B03A B03B B03C B20A B20B B20C
	04	E36A E36B
	06	G12A G16A G33Z G38A G38B G38C
	07	H33Z
	08	I02A I02B I02C I06A I06B I09A I09B I09C I09D I09E
	09	J01A J01B
	11	L33Z
	21A	W01A W01B W01C W60A
	21B	X06A X06B X06C X07A X07B
	Prä	A11A A11B A46C A46D B61A B61B B61C
7A.71.2A↔		BORP EML KORP MBOR MKOR VAC VAC I VAC II VBOR VKOR
	01	B01A B02A B02B B03A B03B B03C B20A B20B B20C
	04	E36A E36B
	06	G12A G16A G33Z G38A G38B G38C
	07	H33Z
	08	I02A I02B I02C I06A I06B I09A I09B I09C I09D I09E
	09	J01A J01B
	11	L33Z
	21A	W01A W01B W01C W60A
	21B	X06A X06B X06C X07A X07B
	Prä	A11A A11B A46C A46D B61A B61B B61C
7A.71.2B↔		BORP EML KORP MBOR MKOR VAC VAC I VAC II VBOR VKOR
	01	B01A B02A B02B B03A B03B B03C B20A B20B B20C
	04	E36A E36B
	06	G12A G16A G33Z G38A G38B G38C
	07	H33Z
	08	I02A I02B I02C I06A I06B I09A I09B I09C I09D I09E
	09	J01A J01B
	11	L33Z
	21A	W01A W01B W01C W60A
	21B	X06A X06B X06C X07A X07B
	Prä	A11A A11B A46C A46D B61A B61B B61C
7A.71.2C↔		BORP EML KORP MBOR MKOR VAC VAC I VAC II VBOR VKOR
	01	B01A B02A B02B B03A B03B B03C B20A B20B B20C
	04	E36A E36B
	06	G12A G16A G33Z G38A G38B G38C
	07	H33Z
	08	I02A I02B I02C I06A I06B I09A I09B I09C I09D I09E
	09	J01A J01B
	11	L33Z
	21A	W01A W01B W01C W60A
	21B	X06A X06B X06C X07A X07B
	Prä	A11A A11B A46C A46D B61A B61B B61C
7A.71.2D↔		BORP EML KORP MBOR MKOR VAC VAC I VAC II VBOR VKOR
	01	B01A B02A B02B B03A B03B B03C B20A B20B B20C
	04	E36A E36B
	06	G12A G16A G33Z G38A G38B G38C
	07	H33Z
	08	I02A I02B I02C I06A I06B I09A I09B I09C I09D I09E
	09	J01A J01B
	11	L33Z
	21A	W01A W01B W01C W60A
	21B	X06A X06B X06C X07A X07B
	Prä	A11A A11B A46C A46D B61A B61B B61C
7A.71.2E↔		BORP EML KORP MBOR MKOR VAC VAC I VAC II VBOR VKOR
	01	B01A B02A B02B B03A B03B B03C B20A B20B B20C
	04	E36A E36B
	06	G12A G16A G33Z G38A G38B G38C
	07	H33Z
	08	I02A I02B I02C I06A I06B I09A I09B I09C I09D I09E
	09	J01A J01B
	11	L33Z
	21A	W01A W01B W01C W60A
	21B	X06A X06B X06C X07A X07B
	Prä	A11A A11B A46C A46D B61A B61B B61C
7A.71.2F↔		BORP EML KORP MBOR MKOR VAC VAC I VAC II VBOR VKOR
	01	B01A B02A B02B B03A B03B B03C B20A B20B B20C

CHOP	MDC	DRG
	04	E36A E36B
	06	G12A G16A G33Z G38A G38B G38C
	07	H33Z
	08	I02A I02B I02C I06A I06B I09A I09B I09C I09D I09E
	09	J01A J01B
	11	L33Z
	21A	W01A W01B W01C W60A
	21B	X06A X06B X06C X07A X07B
	Prä	A11A A11B A46C A46D B61A B61B B61C
7A.72.11↔		BORP EML MBOR VAC VAC I VAC II VBOR
	01	B03A B03B B03C
	04	E36A E36B
	06	G12A G16A G33Z G38A G38B G38C
	07	H33Z
	08	I02A I02B I02C I09A I09B I09C I09D I09E I09F
	09	J01A J01B
	11	L33Z
	13	N11A N11B
	21A	W01A W01B W01C W60A
	21B	X06A X06B X06C X07A X07B
	Prä	A11A A11B A46C A46D B61A B61B B61C B61D
7A.72.12↔		BORP EML MBOR VAC VAC I VAC II VBOR
	01	B03A B03B B03C
	04	E36A E36B
	06	G12A G16A G33Z G38A G38B G38C
	07	H33Z
	08	I02A I02B I02C I09A I09B I09C I09D I09E
	09	J01A J01B
	11	L33Z
	13	N11A N11B
	21A	W01A W01B W01C W60A
	21B	X06A X06B X06C X07A X07B
	Prä	A11A A11B A46C A46D B61A B61B B61C B61D
7A.72.13↔		BORP EML KORP MBOR MKOR VAC VAC I VAC II VBOR VKOR
	01	B01A B02A B02B B03A B03B B03C B20A B20B B20C
	04	E36A E36B
	06	G12A G16A G33Z G38A G38B G38C
	07	H33Z
	08	I02A I02B I02C I09A I09B I09C I09D I09E
	09	J01A J01B
	11	L33Z
	21A	W01A W01B W01C W60A
	21B	X06A X06B X06C X07A X07B
	Prä	A11A A11B A46C A46D B61A B61B B61C
7A.72.14↔		BORP EML KORP MBOR MKOR VAC VAC I VAC II VBOR VKOR
	01	B01A B02A B02B B03A B03B B03C B20A B20B B20C
	04	E36A E36B
	06	G12A G16A G33Z G38A G38B G38C
	07	H33Z
	08	I02A I02B I02C I09A I09B I09C I09D I09E
	09	J01A J01B
	11	L33Z
	21A	W01A W01B W01C W60A
	21B	X06A X06B X06C X07A X07B
	Prä	A11A A11B A46C A46D B61A B61B B61C
7A.72.15↔		BORP EML KORP MBOR MKOR VAC VAC I VAC II VBOR VKOR
	01	B01A B02A B02B B03A B03B B03C B20A B20B B20C
	04	E36A E36B
	06	G12A G16A G33Z G38A G38B G38C
	07	H33Z
	08	I02A I02B I02C I09A I09B I09C I09D I09E
	09	J01A J01B
	11	L33Z
	21A	W01A W01B W01C W60A
	21B	X06A X06B X06C X07A X07B
	Prä	A11A A11B A46C A46D B61A B61B B61C
7A.72.16↔		BORP EML KORP MBOR MKOR VAC VAC I VAC II VBOR VKOR
	01	B01A B02A B02B B03A B03B B03C B20A B20B B20C
	04	E36A E36B
	06	G12A G16A G33Z G38A G38B G38C
	07	H33Z
	08	I02A I02B I02C I09A I09B I09C I09D I09E
	09	J01A J01B
	11	L33Z
	21A	W01A W01B W01C W60A
	21B	X06A X06B X06C X07A X07B
	Prä	A11A A11B A46C A46D B61A B61B B61C
7A.72.17↔		BORP EML KORP MBOR MKOR VAC VAC I VAC II VBOR VKOR
	01	B01A B02A B02B B03A B03B B03C B20A B20B B20C
	04	E36A E36B
	06	G12A G16A G33Z G38A G38B G38C
	07	H33Z
	08	I02A I02B I02C I09A I09B I09C I09D I09E
	09	J01A J01B
	11	L33Z
	21A	W01A W01B W01C W60A
	21B	X06A X06B X06C X07A X07B
	Prä	A11A A11B A46C A46D B61A B61B B61C
7A.72.18↔		BORP EML KORP MBOR MKOR VAC VAC I VAC II VBOR VKOR
	01	B01A B02A B02B B03A B03B B03C B20A B20B B20C
	04	E36A E36B
	06	G12A G16A G33Z G38A G38B G38C
	07	H33Z
	08	I02A I02B I02C I09A I09B I09C I09D I09E
	09	J01A J01B
	11	L33Z
	21A	W01A W01B W01C W60A
	21B	X06A X06B X06C X07A X07B
	Prä	A11A A11B A46C A46D B61A B61B B61C
7A.72.1A↔		BORP EML KORP MBOR MKOR VAC VAC I VAC II VBOR VKOR
	01	B01A B02A B02B B03A B03B B03C B20A B20B B20C
	04	E36A E36B
	06	G12A G16A G33Z G38A G38B G38C
	07	H33Z
	08	I02A I02B I02C I09A I09B I09C

PROC

PROC

CHOP	MDC	DRG
		I09D I09E
	09	J01A J01B
	11	L33Z
	21A	W01A W01B W01C W60A
	21B	X06A X06B X06C X07A X07B
	Prä	A11A A11B A46C A46D B61A B61B B61C
7A.72.1B↔		BORP EML KORP MBOR MKOR VAC VAC I VAC II VBOR VKOR
	01	B01A B02A B02B B03A B03B B03C B20A B20B B20C
	04	E36A E36B
	06	G12A G16A G33Z G38A G38B G38C
	07	H33Z
	08	I02A I02B I02C I09A I09B I09C I09D I09E
	09	J01A J01B
	11	L33Z
	21A	W01A W01B W01C W60A
	21B	X06A X06B X06C X07A X07B
	Prä	A11A A11B A46C A46D B61A B61B B61C
7A.72.1C↔		BORP EML KORP MBOR MKOR VAC VAC I VAC II VBOR VKOR
	01	B01A B02A B02B B03A B03B B03C B20A B20B B20C
	04	E36A E36B
	06	G12A G16A G33Z G38A G38B G38C
	07	H33Z
	08	I02A I02B I02C I09A I09B I09C I09D I09E
	09	J01A J01B
	11	L33Z
	21A	W01A W01B W01C W60A
	21B	X06A X06B X06C X07A X07B
	Prä	A11A A11B A46C A46D B61A B61B B61C
7A.72.1D↔		BORP EML KORP MBOR MKOR VAC VAC I VAC II VBOR VKOR
	01	B01A B02A B02B B03A B03B B03C B20A B20B B20C
	04	E36A E36B
	06	G12A G16A G33Z G38A G38B G38C
	07	H33Z
	08	I02A I02B I02C I09A I09B I09C I09D I09E
	09	J01A J01B
	11	L33Z
	21A	W01A W01B W01C W60A
	21B	X06A X06B X06C X07A X07B
	Prä	A11A A11B A46C A46D B61A B61B B61C
7A.72.1E↔		BORP EML KORP MBOR MKOR VAC VAC I VAC II VBOR VKOR
	01	B01A B02A B02B B03A B03B B03C B20A B20B B20C
	04	E36A E36B
	06	G12A G16A G33Z G38A G38B G38C
	07	H33Z
	08	I02A I02B I02C I09A I09B I09C I09D I09E
	09	J01A J01B
	11	L33Z
	21A	W01A W01B W01C W60A
	21B	X06A X06B X06C X07A X07B
	Prä	A11A A11B A46C A46D B61A B61B B61C
7A.72.1F↔		BORP EML KORP MBOR MKOR VAC VAC I VAC II VBOR VKOR
	01	B01A B02A B02B B03A B03B B03C B20A B20B B20C
	04	E36A E36B
	06	G12A G16A G33Z G38A G38B G38C
	07	H33Z
	08	I02A I02B I02C I09A I09B I09C I09D I09E
	09	J01A J01B
	11	L33Z
	21A	W01A W01B W01C W60A
	21B	X06A X06B X06C X07A X07B
	Prä	A11A A11B A46C A46D B61A B61B B61C
7A.72.21↔		BORP EML MBOR VAC VAC I VAC II VBOR
	01	B03A B03B B03C
	04	E36A E36B
	06	G12A G16A G33Z G38A G38B G38C
	07	H33Z
	08	I02A I02B I02C I09A I09B I09C I09D I09E I09F
	09	J01A J01B
	11	L33Z
	13	N11A N11B
	21A	W01A W01B W01C W60A
	21B	X06A X06B X06C X07A X07B
	Prä	A11A A11B A46C A46D B61A B61B B61C B61D
7A.72.22↔		BORP EML MBOR VAC VAC I VAC II VBOR
	01	B03A B03B B03C
	04	E36A E36B
	06	G12A G16A G33Z G38A G38B G38C
	07	H33Z
	08	I02A I02B I02C I09A I09B I09C I09D I09E
	09	J01A J01B
	11	L33Z
	13	N11A N11B
	21A	W01A W01B W01C W60A
	21B	X06A X06B X06C X07A X07B
	Prä	A11A A11B A46C A46D B61A B61B B61C B61D
7A.72.23↔		BORP EML KORP MBOR MKOR VAC VAC I VAC II VBOR VKOR
	01	B01A B02A B02B B03A B03B B03C B20A B20B B20C
	04	E36A E36B
	06	G12A G16A G33Z G38A G38B G38C
	07	H33Z
	08	I02A I02B I02C I09A I09B I09C I09D I09E
	09	J01A J01B
	11	L33Z
	21A	W01A W01B W01C W60A
	21B	X06A X06B X06C X07A X07B
	Prä	A11A A11B A46C A46D B61A B61B B61C
7A.72.24↔		BORP EML KORP MBOR MKOR VAC VAC I VAC II VBOR VKOR
	01	B01A B02A B02B B03A B03B B03C B20A B20B B20C
	04	E36A E36B
	06	G12A G16A G33Z G38A G38B G38C
	07	H33Z
	08	I02A I02B I02C I09A I09B I09C I09D I09E
	09	J01A J01B
	11	L33Z
	21A	W01A W01B W01C W60A
	21B	X06A X06B X06C X07A X07B

CHOP	MDC	DRG
	Prä	A11A A11B A46C A46D B61A B61B B61C
7A.72.25↔		BORP EML KORP MBOR MKOR VAC VAC I VAC II VBOR VKOR
	01	B01A B02A B02B B03A B03B B03C B20A B20B B20C
	04	E36A E36B
	06	G12A G16A G33Z G38A G38B G38C
	07	H33Z
	08	I02A I02B I02C I09A I09B I09C I09D I09E
	09	J01A J01B
	11	L33Z
	21A	W01A W01B W01C W60A
	21B	X06A X06B X06C X07A X07B
	Prä	A11A A11B A46C A46D B61A B61B B61C
7A.72.26↔		BORP EML KORP MBOR MKOR VAC VAC I VAC II VBOR VKOR
	01	B01A B02A B02B B03A B03B B03C B20A B20B B20C
	04	E36A E36B
	06	G12A G16A G33Z G38A G38B G38C
	07	H33Z
	08	I02A I02B I02C I09A I09B I09C I09D I09E
	09	J01A J01B
	11	L33Z
	21A	W01A W01B W01C W60A
	21B	X06A X06B X06C X07A X07B
	Prä	A11A A11B A46C A46D B61A B61B B61C
7A.72.27↔		BORP EML KORP MBOR MKOR VAC VAC I VAC II VBOR VKOR
	01	B01A B02A B02B B03A B03B B03C B20A B20B B20C
	04	E36A E36B
	06	G12A G16A G33Z G38A G38B G38C
	07	H33Z
	08	I02A I02B I02C I09A I09B I09C I09D I09E
	09	J01A J01B
	11	L33Z
	21A	W01A W01B W01C W60A
	21B	X06A X06B X06C X07A X07B
	Prä	A11A A11B A46C A46D B61A B61B B61C
7A.72.28↔		BORP EML KORP MBOR MKOR VAC VAC I VAC II VBOR VKOR
	01	B01A B02A B02B B03A B03B B03C B20A B20B B20C
	04	E36A E36B
	06	G12A G16A G33Z G38A G38B G38C
	07	H33Z
	08	I02A I02B I02C I09A I09B I09C I09D I09E
	09	J01A J01B
	11	L33Z
	21A	W01A W01B W01C W60A
	21B	X06A X06B X06C X07A X07B
	Prä	A11A A11B A46C A46D B61A B61B B61C
7A.72.2A↔		BORP EML KORP MBOR MKOR VAC VAC I VAC II VBOR VKOR
	01	B01A B02A B02B B03A B03B B03C B20A B20B B20C
	04	E36A E36B
	06	G12A G16A G33Z G38A G38B G38C
	07	H33Z
	08	I02A I02B I02C I09A I09B I09C I09D I09E
	09	J01A J01B
	11	L33Z
	21A	W01A W01B W01C W60A
	21B	X06A X06B X06C X07A X07B
	Prä	A11A A11B A46C A46D B61A B61B B61C
7A.72.2B↔		BORP EML KORP MBOR MKOR VAC VAC I VAC II VBOR VKOR
	01	B01A B02A B02B B03A B03B B03C B20A B20B B20C
	04	E36A E36B
	06	G12A G16A G33Z G38A G38B G38C
	07	H33Z
	08	I02A I02B I02C I09A I09B I09C I09D I09E
	09	J01A J01B
	11	L33Z
	21A	W01A W01B W01C W60A
	21B	X06A X06B X06C X07A X07B
	Prä	A11A A11B A46C A46D B61A B61B B61C
7A.72.2C↔		BORP EML KORP MBOR MKOR VAC VAC I VAC II VBOR VKOR
	01	B01A B02A B02B B03A B03B B03C B20A B20B B20C
	04	E36A E36B
	06	G12A G16A G33Z G38A G38B G38C
	07	H33Z
	08	I02A I02B I02C I09A I09B I09C I09D I09E
	09	J01A J01B
	11	L33Z
	21A	W01A W01B W01C W60A
	21B	X06A X06B X06C X07A X07B
	Prä	A11A A11B A46C A46D B61A B61B B61C
7A.72.2D↔		BORP EML KORP MBOR MKOR VAC VAC I VAC II VBOR VKOR
	01	B01A B02A B02B B03A B03B B03C B20A B20B B20C
	04	E36A E36B
	06	G12A G16A G33Z G38A G38B G38C
	07	H33Z
	08	I02A I02B I02C I09A I09B I09C I09D I09E
	09	J01A J01B
	11	L33Z
	21A	W01A W01B W01C W60A
	21B	X06A X06B X06C X07A X07B
	Prä	A11A A11B A46C A46D B61A B61B B61C
7A.72.2E↔		BORP EML KORP MBOR MKOR VAC VAC I VAC II VBOR VKOR
	01	B01A B02A B02B B03A B03B B03C B20A B20B B20C
	04	E36A E36B
	06	G12A G16A G33Z G38A G38B G38C
	07	H33Z
	08	I02A I02B I02C I09A I09B I09C I09D I09E
	09	J01A J01B
	11	L33Z
	21A	W01A W01B W01C W60A
	21B	X06A X06B X06C X07A X07B
	Prä	A11A A11B A46C A46D B61A B61B B61C

PROC

CHOP	MDC	DRG
7A.72.2F↔		BORP EML KORP MBOR MKOR VAC VAC I VAC II VBOR VKOR
	01	B01A B02A B02B B03A B03B B03C B20A B20B B20C
	04	E36A E36B
	06	G12A G16A G33Z G38A G38B G38C
	07	H33Z
	08	I02A I02B I02C I09A I09B I09C I09D I09E
	09	J01A J01B
	11	L33Z
	21A	W01A W01B W01C W60A
	21B	X06A X06B X06C X07A X07B
	Prä	A11A A11B A46C A46D B61A B61B B61C
7A.73.11↔		BORP EML MBOR VAC VAC I VAC II VBOR
	01	B03A B03B B03C
	04	E36A E36B
	06	G12A G16A G33Z G38A G38B G38C
	07	H33Z
	08	I09C I09D I10A I10B
	11	L33Z
	21A	W01A W01B W01C W60A
	21B	X06A X06B X06C X07A X07B
	Prä	A11A A11B A46C A46D B61B B61C B61D
7A.73.12↔		BORP EML MBOR VAC VAC I VAC II VBOR
	01	B03A B03B B03C
	04	E36A E36B
	06	G12A G16A G33Z G38A G38B G38C
	07	H33Z
	08	I09C I09D I10A I10B
	11	L33Z
	21A	W01A W01B W01C W60A
	21B	X06A X06B X06C X07A X07B
	Prä	A11A A11B A46C A46D B61B B61C B61D
7A.73.13↔		BORP EML KORP MBOR MKOR VAC VAC I VAC II VBOR VKOR
	01	B03A B03B B03C
	04	E36A E36B
	06	G12A G16A G33Z G38A G38B G38C
	07	H33Z
	08	I09C I09D I10A I10B
	11	L33Z
	21A	W01A W01B W01C W60A
	21B	X06A X06B X06C X07A X07B
	Prä	A11A A11B A46C A46D B61B B61C
7A.73.14↔		BORP EML KORP MBOR MKOR VAC VAC I VAC II VBOR VKOR
	01	B03A B03B B03C
	04	E36A E36B
	06	G12A G16A G33Z G38A G38B G38C
	07	H33Z
	08	I09C I09D I10A I10B
	11	L33Z
	21A	W01A W01B W01C W60A
	21B	X06A X06B X06C X07A X07B
	Prä	A11A A11B A46C A46D B61B B61C
7A.73.15↔		BORP EML KORP MBOR MKOR VAC VAC I VAC II VBOR VKOR
	01	B03A B03B B03C
	04	E36A E36B
	06	G12A G16A G33Z G38A G38B G38C
	07	H33Z
	08	I09C I09D I10A I10B
	11	L33Z
	21A	W01A W01B W01C W60A
	21B	X06A X06B X06C X07A X07B
	Prä	A11A A11B A46C A46D B61B B61C
7A.73.16↔		BORP EML KORP MBOR MKOR VAC VAC I VAC II VBOR VKOR
	01	B03A B03B B03C
	04	E36A E36B
	06	G12A G16A G33Z G38A G38B G38C
	07	H33Z
	08	I09C I09D I10A I10B
	11	L33Z
	21A	W01A W01B W01C W60A
	21B	X06A X06B X06C X07A X07B
	Prä	A11A A11B A46C A46D B61B B61C
7A.73.17↔		BORP EML KORP MBOR MKOR VAC VAC I VAC II VBOR VKOR
	01	B03A B03B B03C
	04	E36A E36B
	06	G12A G16A G33Z G38A G38B G38C
	07	H33Z
	08	I09C I09D I10A I10B
	11	L33Z
	21A	W01A W01B W01C W60A
	21B	X06A X06B X06C X07A X07B
	Prä	A11A A11B A46C A46D B61B B61C
7A.73.18↔		BORP EML KORP MBOR MKOR VAC VAC I VAC II VBOR VKOR
	01	B03A B03B B03C
	04	E36A E36B
	06	G12A G16A G33Z G38A G38B G38C
	07	H33Z
	08	I09C I09D I10A I10B
	11	L33Z
	21A	W01A W01B W01C W60A
	21B	X06A X06B X06C X07A X07B
	Prä	A11A A11B A46C A46D B61B B61C
7A.73.1A↔		BORP EML KORP MBOR MKOR VAC VAC I VAC II VBOR VKOR
	01	B03A B03B B03C
	04	E36A E36B
	06	G12A G16A G33Z G38A G38B G38C
	07	H33Z
	08	I09C I09D I10A I10B
	11	L33Z
	21A	W01A W01B W01C W60A
	21B	X06A X06B X06C X07A X07B
	Prä	A11A A11B A46C A46D B61B B61C
7A.73.1B↔		BORP EML KORP MBOR MKOR VAC VAC I VAC II VBOR VKOR
	01	B03A B03B B03C
	04	E36A E36B
	06	G12A G16A G33Z G38A G38B G38C
	07	H33Z
	08	I09C I09D I10A I10B
	11	L33Z
	21A	W01A W01B W01C W60A
	21B	X06A X06B X06C X07A X07B
	Prä	A11A A11B A46C A46D B61B B61C
7A.73.1C↔		BORP EML KORP MBOR MKOR VAC VAC I VAC II VBOR VKOR
	01	B03A B03B B03C
	04	E36A E36B
	06	G12A G16A G33Z

CHOP	MDC	DRG
		G38A G38B G38C
	07	H33Z
	08	I09C I09D I10A I10B
	11	L33Z
	21A	W01A W01B W01C W60A
	21B	X06A X06B X06C X07A X07B
	Prä	A11A A11B A46C A46D B61B B61C
7A.73.1D↔		BORP EML KORP MBOR MKOR VAC VAC I VAC II VBOR VKOR
	01	B03A B03B B03C
	04	E36A E36B
	06	G12A G16A G33Z G38A G38B G38C
	07	H33Z
	08	I09C I09D I10A I10B
	11	L33Z
	21A	W01A W01B W01C W60A
	21B	X06A X06B X06C X07A X07B
	Prä	A11A A11B A46C A46D B61B B61C
7A.73.1E↔		BORP EML KORP MBOR MKOR VAC VAC I VAC II VBOR VKOR
	01	B03A B03B B03C
	04	E36A E36B
	06	G12A G16A G33Z G38A G38B G38C
	07	H33Z
	08	I09C I09D I10A I10B
	11	L33Z
	21A	W01A W01B W01C W60A
	21B	X06A X06B X06C X07A X07B
	Prä	A11A A11B A46C A46D B61B B61C
7A.73.1F↔		BORP EML KORP MBOR MKOR VAC VAC I VAC II VBOR VKOR
	01	B03A B03B B03C
	04	E36A E36B
	06	G12A G16A G33Z G38A G38B G38C
	07	H33Z
	08	I09C I09D I10A I10B
	11	L33Z
	21A	W01A W01B W01C W60A
	21B	X06A X06B X06C X07A X07B
	Prä	A11A A11B A46C A46D B61B B61C
7A.73.21↔		BORP EML MBOR VAC VAC I VAC II VBOR
	01	B03A B03B B03C
	04	E36A E36B
	06	G12A G16A G33Z G38A G38B G38C
	07	H33Z
	08	I09C I09D I10A I10B
	11	L33Z
	21A	W01A W01B W01C W60A
	21B	X06A X06B X06C X07A X07B
	Prä	A11A A11B A46C A46D B61B B61C
7A.73.22↔		BORP EML MBOR VAC VAC I VAC II VBOR
	01	B03A B03B B03C
	04	E36A E36B
	06	G12A G16A G33Z G38A G38B G38C
	07	H33Z
	08	I09C I09D I10A I10B
	11	L33Z
	21A	W01A W01B W01C W60A
	21B	X06A X06B X06C X07A X07B
	Prä	A11A A11B A46C A46D B61B B61C B61D
7A.73.23↔		BORP EML KORP MBOR MKOR VAC VAC I VAC II VBOR VKOR
	01	B03A B03B B03C
	04	E36A E36B
	06	G12A G16A G33Z G38A G38B G38C
	07	H33Z
	08	I09C I09D I10A I10B
	11	L33Z
	21A	W01A W01B W01C W60A
	21B	X06A X06B X06C X07A X07B
	Prä	A11A A11B A46C A46D B61B B61C
7A.73.24↔		BORP EML KORP MBOR MKOR VAC VAC I VAC II VBOR VKOR
	01	B03A B03B B03C
	04	E36A E36B
	06	G12A G16A G33Z G38A G38B G38C
	07	H33Z
	08	I09C I09D I10A I10B
	11	L33Z
	21A	W01A W01B W01C W60A
	21B	X06A X06B X06C X07A X07B
	Prä	A11A A11B A46C A46D B61B B61C
7A.73.25↔		BORP EML KORP MBOR MKOR VAC VAC I VAC II VBOR VKOR
	01	B03A B03B B03C
	04	E36A E36B
	06	G12A G16A G33Z G38A G38B G38C
	07	H33Z
	08	I09C I09D I10A I10B
	11	L33Z
	21A	W01A W01B W01C W60A
	21B	X06A X06B X06C X07A X07B
	Prä	A11A A11B A46C A46D B61B B61C
7A.73.26↔		BORP EML KORP MBOR MKOR VAC VAC I VAC II VBOR VKOR
	01	B03A B03B B03C
	04	E36A E36B
	06	G12A G16A G33Z G38A G38B G38C
	07	H33Z
	08	I09C I09D I10A I10B
	11	L33Z
	21A	W01A W01B W01C W60A
	21B	X06A X06B X06C X07A X07B
	Prä	A11A A11B A46C A46D B61B B61C
7A.73.27↔		BORP EML KORP MBOR MKOR VAC VAC I VAC II VBOR VKOR
	01	B03A B03B B03C
	04	E36A E36B
	06	G12A G16A G33Z G38A G38B G38C
	07	H33Z
	08	I09C I09D I10A I10B
	11	L33Z
	21A	W01A W01B W01C W60A
	21B	X06A X06B X06C X07A X07B
	Prä	A11A A11B A46C A46D B61B B61C
7A.73.28↔		BORP EML KORP MBOR MKOR VAC VAC I VAC II VBOR VKOR
	01	B03A B03B B03C
	04	E36A E36B
	06	G12A G16A G33Z G38A G38B G38C
	07	H33Z
	08	I09C I09D I10A I10B
	11	L33Z
	21A	W01A W01B W01C W60A
	21B	X06A X06B X06C X07A X07B
	Prä	A11A A11B A46C A46D B61B B61C
7A.73.2A↔		BORP EML KORP

PROC

PROC

CHOP	MDC	DRG
		MBOR MKOR VAC VAC I VAC II VBOR VKOR
	01	B03A B03B B03C
	04	E36A E36B
	06	G12A G16A G33Z G38A G38B G38C
	07	H33Z
	08	I09C I09D I10A I10B
	11	L33Z
	21A	W01A W01B W01C W60A
	21B	X06A X06B X06C X07A X07B
	Prä	A11A A11B A46C A46D B61B B61C
7A.73.2B↔		BORP EML KORP MBOR MKOR VAC VAC I VAC II VBOR VKOR
	01	B03A B03B B03C
	04	E36A E36B
	06	G12A G16A G33Z G38A G38B G38C
	07	H33Z
	08	I09C I09D I10A I10B
	11	L33Z
	21A	W01A W01B W01C W60A
	21B	X06A X06B X06C X07A X07B
	Prä	A11A A11B A46C A46D B61B B61C
7A.73.2C↔		BORP EML KORP MBOR MKOR VAC VAC I VAC II VBOR VKOR
	01	B03A B03B B03C
	04	E36A E36B
	06	G12A G16A G33Z G38A G38B G38C
	07	H33Z
	08	I09C I09D I10A I10B
	11	L33Z
	21A	W01A W01B W01C W60A
	21B	X06A X06B X06C X07A X07B
	Prä	A11A A11B A46C A46D B61B B61C
7A.73.2D↔		BORP EML KORP MBOR MKOR VAC VAC I VAC II VBOR VKOR
	01	B03A B03B B03C
	04	E36A E36B
	06	G12A G16A G33Z G38A G38B G38C
	07	H33Z
	08	I09C I09D I10A I10B
	11	L33Z
	21A	W01A W01B W01C W60A
	21B	X06A X06B X06C X07A X07B
	Prä	A11A A11B A46C A46D B61B B61C
7A.73.2E↔		BORP EML KORP MBOR MKOR VAC VAC I VAC II VBOR VKOR
	01	B03A B03B B03C
	04	E36A E36B
	06	G12A G16A G33Z G38A G38B G38C
	07	H33Z
	08	I09C I09D I10A I10B
	11	L33Z
	21A	W01A W01B W01C W60A
	21B	X06A X06B X06C X07A X07B
	Prä	A11A A11B A46C A46D B61B B61C
7A.73.2F↔		BORP EML KORP MBOR MKOR VAC VAC I VAC II VBOR VKOR
	01	B03A B03B B03C
	04	E36A E36B
	06	G12A G16A G33Z G38A G38B G38C
	07	H33Z
	08	I09C I09D I10A I10B
	11	L33Z
	21A	W01A W01B W01C W60A
	21B	X06A X06B X06C X07A X07B
	Prä	A11A A11B A46C A46D B61B B61C
7A.74.11↔		BORP EML MBOR VAC VAC I VAC II VBOR
	01	B03A B03B B03C
	04	E36A E36B
	06	G12A G16A G33Z G38A G38B G38C
	07	H33Z
	08	I02A I02B I02C I09A I09B I09C I09D I09E
	09	J01A J01B
	11	L33Z
	21A	W01A W01B W01C W60A
	21B	X06A X06B X06C
	Prä	A11A A11B A46C A46D B61A B61B B61C B61D
7A.74.12↔		BORP EML MBOR VAC VAC I VAC II VBOR
	01	B03A B03B B03C
	04	E36A E36B
	06	G12A G16A G33Z G38A G38B G38C
	07	H33Z
	08	I02A I02B I02C I06A I06B I06C I09A I09B I09C I09D I09E
	09	J01A J01B
	11	L33Z
	21A	W01A W01B W01C W60A
	21B	X06A X06B X06C
	Prä	A11A A11B A46C A46D B61A B61B B61C B61D
7A.74.13↔		BORP EML KORP MBOR MKOR VAC VAC I VAC II VBOR VKOR
	01	B03A B03B B03C
	04	E36A E36B
	06	G12A G16A G33Z G38A G38B G38C
	07	H33Z
	08	I02A I02B I02C I06A I06B I06C I09A I09B I09C I09D I09E
	09	J01A J01B
	11	L33Z
	21A	W01A W01B W01C W60A
	21B	X06A X06B X06C
	Prä	A11A A11B A46C A46D B61A B61B B61C
7A.74.14↔		BORP EML KORP MBOR MKOR VAC VAC I VAC II VBOR VKOR
	01	B03A B03B B03C
	04	E36A E36B
	06	G12A G16A G33Z G38A G38B G38C
	07	H33Z
	08	I02A I02B I02C I06A I06B I06C I09A I09B I09C I09D I09E
	09	J01A J01B
	11	L33Z
	21A	W01A W01B W01C W60A
	21B	X06A X06B X06C
	Prä	A11A A11B A46C A46D B61A B61B B61C
7A.74.15↔		BORP EML KORP MBOR MKOR VAC VAC I VAC II VBOR VKOR
	01	B03A B03B B03C
	04	E36A E36B
	06	G12A G16A G33Z G38A G38B G38C
	07	H33Z
	08	I02A I02B I02C I06A I06B I06C I09A I09B I09C I09D I09E
	09	J01A J01B
	11	L33Z
	21A	W01A W01B W01C W60A
	21B	X06A X06B X06C
	Prä	A11A A11B A46C A46D B61A B61B B61C
7A.74.16↔		BORP EML KORP

CHOP	MDC	DRG
		MBOR MKOR VAC VAC I VAC II VBOR VKOR
	01	B03A B03B B03C
	04	E36A E36B
	06	G12A G16A G33Z G38A G38B G38C
	07	H33Z
	08	I02A I02B I02C I06A I06B I06C I09A I09B I09C I09D I09E
	09	J01A J01B
	11	L33Z
	21A	W01A W01B W01C W60A
	21B	X06A X06B X06C
	Prä	A11A A11B A46C A46D B61A B61B B61C
7A.74.17↔		BORP EML KORP MBOR MKOR VAC VAC I VAC II VBOR VKOR
	01	B03A B03B B03C
	04	E36A E36B
	06	G12A G16A G33Z G38A G38B G38C
	07	H33Z
	08	I02A I02B I02C I06A I06B I06C I09A I09B I09C I09D I09E
	09	J01A J01B
	11	L33Z
	21A	W01A W01B W01C W60A
	21B	X06A X06B X06C
	Prä	A11A A11B A46C A46D B61A B61B B61C
7A.74.18↔		BORP EML KORP MBOR MKOR VAC VAC I VAC II VBOR VKOR
	01	B03A B03B B03C
	04	E36A E36B
	06	G12A G16A G33Z G38A G38B G38C
	07	H33Z
	08	I02A I02B I02C I06A I06B I09A I09B I09C I09D I09E
	09	J01A J01B
	11	L33Z
	21A	W01A W01B W01C W60A
	21B	X06A X06B X06C
	Prä	A11A A11B A46C A46D B61A B61B B61C
7A.74.1A↔		BORP EML KORP MBOR MKOR VAC VAC I VAC II VBOR VKOR
	01	B03A B03B B03C
	04	E36A E36B
	06	G12A G16A G33Z G38A G38B G38C
	07	H33Z
	08	I02A I02B I02C I06A I06B I09A I09B I09C I09D I09E
	09	J01A J01B
	11	L33Z
	21A	W01A W01B W01C W60A
	21B	X06A X06B X06C
	Prä	A11A A11B A46C A46D B61A B61B B61C
7A.74.1B↔		BORP EML KORP MBOR MKOR VAC VAC I VAC II VBOR VKOR
	01	B03A B03B B03C
	04	E36A E36B
	06	G12A G16A G33Z G38A G38B G38C
	07	H33Z
	08	I02A I02B I02C I06A I06B I09A I09B I09C I09D I09E
	09	J01A J01B
	11	L33Z
	21A	W01A W01B W01C W60A
	21B	X06A X06B X06C
	Prä	A11A A11B A46C A46D B61A B61B B61C
7A.74.1C↔		BORP EML KORP MBOR MKOR VAC VAC I VAC II VBOR VKOR
	01	B03A B03B B03C
	04	E36A E36B
	06	G12A G16A G33Z G38A G38B G38C
	07	H33Z
	08	I02A I02B I02C I06A I06B I09A I09B I09C I09D I09E
	09	J01A J01B
	11	L33Z
	21A	W01A W01B W01C W60A
	21B	X06A X06B X06C
	Prä	A11A A11B A46C A46D B61A B61B B61C
7A.74.1D↔		BORP EML KORP MBOR MKOR VAC VAC I VAC II VBOR VKOR
	01	B03A B03B B03C
	04	E36A E36B
	06	G12A G16A G33Z G38A G38B G38C
	07	H33Z
	08	I02A I02B I02C I06A I06B I09A I09B I09C I09D I09E
	09	J01A J01B
	11	L33Z
	21A	W01A W01B W01C W60A
	21B	X06A X06B X06C
	Prä	A11A A11B A46C A46D B61A B61B B61C
7A.74.1E↔		BORP EML KORP MBOR MKOR VAC VAC I VAC II VBOR VKOR
	01	B03A B03B B03C
	04	E36A E36B
	06	G12A G16A G33Z G38A G38B G38C
	07	H33Z
	08	I02A I02B I02C I06A I06B I09A I09B I09C I09D I09E
	09	J01A J01B
	11	L33Z
	21A	W01A W01B W01C W60A
	21B	X06A X06B X06C
	Prä	A11A A11B A46C A46D B61A B61B B61C
7A.74.1F↔		BORP EML KORP MBOR MKOR VAC VAC I VAC II VBOR VKOR
	01	B03A B03B B03C
	04	E36A E36B
	06	G12A G16A G33Z G38A G38B G38C
	07	H33Z
	08	I02A I02B I02C I06A I06B I09A I09B I09C I09D I09E
	09	J01A J01B
	11	L33Z
	21A	W01A W01B W01C W60A
	21B	X06A X06B X06C
	Prä	A11A A11B A46C A46D B61A B61B B61C
7A.74.21↔		BORP EML MBOR VAC VAC I VAC II VBOR
	01	B03A B03B B03C
	04	E36A E36B
	06	G12A G16A G33Z G38A G38B G38C
	07	H33Z
	08	I02A I02B I02C I09A I09B I09C I09D I09E
	09	J01A J01B
	11	L33Z
	21A	W01A W01B W01C W60A
	21B	X06A X06B X06C
	Prä	A11A A11B A46C A46D B61A B61B B61C B61D
7A.74.22↔		BORP EML MBOR VAC VAC I VAC II VBOR

PROC

PROC

CHOP	MDC	DRG
	01	B03A B03B B03C
	04	E36A E36B
	06	G12A G16A G33Z G38A G38B G38C
	07	H33Z
	08	I02A I02B I02C I06A I06B I06C I09A I09B I09C I09D I09E
	09	J01A J01B
	11	L33Z
	21A	W01A W01B W01C W60A
	21B	X06A X06B X06C
	Prä	A11A A11B A46C A46D B61A B61B B61C B61D
7A.74.23↔		BORP EML KORP MBOR MKOR VAC VAC I VAC II VBOR VKOR
	01	B03A B03B B03C
	04	E36A E36B
	06	G12A G16A G33Z G38A G38B G38C
	07	H33Z
	08	I02A I02B I02C I06A I06B I06C I09A I09B I09C I09D I09E
	09	J01A J01B
	11	L33Z
	21A	W01A W01B W01C W60A
	21B	X06A X06B X06C X07A X07B
	Prä	A11A A11B A46C A46D B61A B61B B61C
7A.74.24↔		BORP EML KORP MBOR MKOR VAC VAC I VAC II VBOR VKOR
	01	B03A B03B B03C
	04	E36A E36B
	06	G12A G16A G33Z G38A G38B G38C
	07	H33Z
	08	I02A I02B I02C I06A I06B I06C I09A I09B I09C I09D I09E
	09	J01A J01B
	11	L33Z
	21A	W01A W01B W01C W60A
	21B	X06A X06B X06C X07A X07B
	Prä	A11A A11B A46C A46D B61A B61B B61C
7A.74.25↔		BORP EML KORP MBOR MKOR VAC VAC I VAC II VBOR VKOR
	01	B03A B03B B03C
	04	E36A E36B
	06	G12A G16A G33Z G38A G38B G38C
	07	H33Z
	08	I02A I02B I02C I06A I06B I06C I09A I09B I09C I09D I09E
	09	J01A J01B
	11	L33Z
	21A	W01A W01B W01C W60A
	21B	X06A X06B X06C X07A X07B
	Prä	A11A A11B A46C A46D B61A B61B B61C
7A.74.26↔		BORP EML KORP MBOR MKOR VAC VAC I VAC II VBOR VKOR
	01	B03A B03B B03C
	04	E36A E36B
	06	G12A G16A G33Z G38A G38B G38C
	07	H33Z
	08	I02A I02B I02C I06A I06B I06C I09A I09B I09C I09D I09E
	09	J01A J01B
	11	L33Z
	21A	W01A W01B W01C W60A
	21B	X06A X06B X06C X07A X07B
	Prä	A11A A11B A46C A46D B61A B61B B61C
7A.74.27↔		BORP EML KORP MBOR MKOR VAC VAC I VAC II VBOR VKOR
	01	B03A B03B B03C
	04	E36A E36B
	06	G12A G16A G33Z G38A G38B G38C
	07	H33Z
	08	I02A I02B I02C I06A I06B I06C I09A I09B I09C I09D I09E
	09	J01A J01B
	11	L33Z
	21A	W01A W01B W01C W60A
	21B	X06A X06B X06C X07A X07B
	Prä	A11A A11B A46C A46D B61A B61B B61C
7A.74.28↔		BORP EML KORP MBOR MKOR VAC VAC I VAC II VBOR VKOR
	01	B03A B03B B03C
	04	E36A E36B
	06	G12A G16A G33Z G38A G38B G38C
	07	H33Z
	08	I02A I02B I02C I06A I06B I09A I09B I09C I09D I09E
	09	J01A J01B
	11	L33Z
	21A	W01A W01B W01C W60A
	21B	X06A X06B X06C X07A X07B
	Prä	A11A A11B A46C A46D B61A B61B B61C
7A.74.2A↔		BORP EML KORP MBOR MKOR VAC VAC I VAC II VBOR VKOR
	01	B03A B03B B03C
	04	E36A E36B
	06	G12A G16A G33Z G38A G38B G38C
	07	H33Z
	08	I02A I02B I02C I06A I06B I09A I09B I09C I09D I09E
	09	J01A J01B
	11	L33Z
	21A	W01A W01B W01C W60A
	21B	X06A X06B X06C X07A X07B
	Prä	A11A A11B A46C A46D B61A B61B B61C
7A.74.2B↔		BORP EML KORP MBOR MKOR VAC VAC I VAC II VBOR VKOR
	01	B03A B03B B03C
	04	E36A E36B
	06	G12A G16A G33Z G38A G38B G38C
	07	H33Z
	08	I02A I02B I02C I06A I06B I09A I09B I09C I09D I09E
	09	J01A J01B
	11	L33Z
	21A	W01A W01B W01C W60A
	21B	X06A X06B X06C X07A X07B
	Prä	A11A A11B A46C A46D B61A B61B B61C
7A.74.2C↔		BORP EML KORP MBOR MKOR VAC VAC I VAC II VBOR VKOR
	01	B03A B03B B03C
	04	E36A E36B
	06	G12A G16A G33Z G38A G38B G38C
	07	H33Z
	08	I02A I02B I02C I06A I06B I09A I09B I09C I09D I09E
	09	J01A J01B
	11	L33Z
	21A	W01A W01B W01C W60A

CHOP	MDC	DRG
	21B	X06A X06B X06C X07A X07B
	Prä	A11A A11B A46C A46D B61A B61B B61C
7A.74.2D↔		BORP EML KORP MBOR MKOR VAC VAC I VAC II VBOR VKOR
	01	B03A B03B B03C
	04	E36A E36B
	06	G12A G16A G33Z G38A G38B G38C
	07	H33Z
	08	I02A I02B I02C I06A I06B I09A I09B I09C I09D I09E
	09	J01A J01B
	11	L33Z
	21A	W01A W01B W01C W60A
	21B	X06A X06B X06C X07A X07B
	Prä	A11A A11B A46C A46D B61A B61B B61C
7A.74.2E↔		BORP EML KORP MBOR MKOR VAC VAC I VAC II VBOR VKOR
	01	B03A B03B B03C
	04	E36A E36B
	06	G12A G16A G33Z G38A G38B G38C
	07	H33Z
	08	I02A I02B I02C I06A I06B I09A I09B I09C I09D I09E
	09	J01A J01B
	11	L33Z
	21A	W01A W01B W01C W60A
	21B	X06A X06B X06C X07A X07B
	Prä	A11A A11B A46C A46D B61A B61B B61C
7A.74.2F↔		BORP EML KORP MBOR MKOR VAC VAC I VAC II VBOR VKOR
	01	B03A B03B B03C
	04	E36A E36B
	06	G12A G16A G33Z G38A G38B G38C
	07	H33Z
	08	I02A I02B I02C I06A I06B I09A I09B I09C I09D I09E
	09	J01A J01B
	11	L33Z
	21A	W01A W01B W01C W60A
	21B	X06A X06B X06C X07A X07B
	Prä	A11A A11B A46C A46D B61A B61B B61C
7A.79↔	01	B03A B03B B03C
	08	I10A I10B I10C
	21A	W01A W01B W01C
7A.81↔		BORP EML MBOR VAC VAC I VAC II VBOR
	04	E36A E36B
	06	G12A G16A G38A G38B
	08	I02A I02B I02C I10A I10B I10C I12A I12B I12C
	21A	W01A W01B W01C
	21B	X06A X06B X06C
	Prä	B61B B61C B61D
7A.82↔		BORP EML MBOR VAC VAC I VAC II VBOR
	01	B03A B03B B03C
	04	E36A E36B
	06	G12A G16A G38A G38B
	08	I02A I02B I02C I12A I12B I12C I23A I23B
	21B	X04Z X05Z X06A X06B X06C
	Prä	B61B B61C B61D
7A.83↔		BORP EML MBOR VAC VAC I VAC II VBOR
	04	E36A E36B
	06	G12A G16A G38A G38B
	08	I02A I02B I02C I10A I10B I10C I12A I12B I12C
	21A	W01A W01B W01C
	21B	X06A X06B X06C
	Prä	B61B B61C B61D
7A.84↔		BORP EML MBOR VAC VAC I VAC II VBOR
	01	B03A B03B B03C
	04	E36A E36B
	06	G12A G16A G38A G38B
	08	I02A I02B I02C I12A I12B I12C I23A I23B
	21B	X04Z X05Z X06A X06B X06C
	Prä	B61B B61C B61D
7A.85↔		BORP EML MBOR VAC VAC I VAC II VBOR
	04	E36A E36B
	06	G12A G16A G38A G38B
	08	I02A I02B I02C I10A I10B I10C I12A I12B I12C
	21A	W01A W01B W01C
	21B	X06A X06B X06C
	Prä	B61B B61C B61D
7A.86↔		BORP EML MBOR VAC VAC I VAC II VBOR
	01	B03A B03B B03C
	04	E36A E36B
	06	G12A G16A G38A G38B
	08	I02A I02B I02C I12A I12B I12C I23A I23B
	21B	X04Z X05Z X06A X06B X06C
	Prä	B61B B61C B61D
7A.89↔		BORP EML MBOR VAC VAC I VAC II VBOR
	04	E36A E36B
	06	G12A G16A G38A G38B
	08	I02A I02B I02C I10A I10B I10C I12A I12B I12C
	21A	W01A W01B W01C
	21B	X06A X06B X06C
	Prä	B61B B61C B61D
7A.A1.11‡↔	01	B60A
	08	I45A
7A.A1.12‡↔	01	B60A
	08	I45A
7A.A1.13‡↔	01	B60A
	08	I45A
7A.A1.14‡↔	01	B60A
	08	I45A
7A.A1.15‡↔	01	B60A
	08	I45A
7A.A1.21‡↔	01	B60A
	08	I45A
7A.A1.22‡↔	01	B60A
	08	I45A
7A.A1.23‡↔	01	B60A
	08	I45A
7A.A1.24‡↔	01	B60A
	08	I45A
7A.A1.25‡↔	01	B60A
	08	I45A
7A.A1.32‡↔	Prä	B61A B61B B61C
	01	B60A
	08	I02A I02B I02C I06A I06B I06C I09A I09B I09C I09D I09E I09F
	21A	W01A W01B W01C
7A.A1.33‡↔	Prä	B61A B61B B61C
	01	B60A
	08	I02A I02B I02C I06A I06B I06C I09A I09B I09C I09D I09E I09F
	21A	W01A W01B W01C
7A.A1.34‡↔	Prä	B61A B61B B61C
	01	B60A
	08	I02A I02B I02C I06A I06B I06C I09A I09B I09C I09D I09E I09F
	21A	W01A W01B W01C
7A.A1.35‡↔	Prä	B61A B61B B61C
	01	B60A
	08	I02A I02B I02C I06A I06B I06C I09A I09B I09C I09D I09E I09F
	21A	W01A W01B W01C
7A.A1.42‡↔	Prä	B61A B61B B61C

PROC

PROC

CHOP	MDC	DRG
	01	B60A
	08	I02A I02B I02C
		I06A I06B I06C
		I09A I09B I09C
		I09D I09E I09F
	21A	W01A W01B W01C
7A.A1.43‡↔	Prä	B61A B61B B61C
	01	B60A
	08	I02A I02B I02C
		I06A I06B I06C
		I09A I09B I09C
		I09D I09E I09F
	21A	W01A W01B W01C
7A.A1.44‡↔	Prä	B61A B61B B61C
	01	B60A
	08	I02A I02B I02C
		I06A I06B I06C
		I09A I09B I09C
		I09D I09E I09F
	21A	W01A W01B W01C
7A.A1.45‡↔	Prä	B61A B61B B61C
	01	B60A
	08	I02A I02B I02C
		I06A I06B I06C
		I09A I09B I09C
		I09D I09E I09F
	21A	W01A W01B W01C
7A.A1.52‡↔	Prä	B61A B61B B61C
	01	B60A
	08	I02A I02B I02C
		I06A I06B I06C
		I09A I09B I09C
		I09D I09E I09F
	21A	W01A W01B W01C
7A.A1.53‡↔	Prä	B61A B61B B61C
	01	B60A
	08	I02A I02B I02C
		I06A I06B I06C
		I09A I09B I09C
		I09D I09E I09F
	21A	W01A W01B W01C
7A.A1.54‡↔	Prä	B61A B61B B61C
	01	B60A
	08	I02A I02B I02C
		I06A I06B I06C
		I09A I09B I09C
		I09D I09E I09F
	21A	W01A W01B W01C
7A.A1.55‡↔	Prä	B61A B61B B61C
	01	B60A
	08	I02A I02B I02C
		I06A I06B I06C
		I09A I09B I09C
		I09D I09E I09F
	21A	W01A W01B W01C
7A.A2↔		BORP EML KORP
		MBOR MKOR VAC
		VAC I VAC II VBOR
		VKOR
	01	B03A B03B B03C
	04	E02A E02B E02C
		E36A E36B
	06	G12A G16A G33Z
		G38A G38B G38C
	07	H33Z
	08	I02A I02B I02C
		I06A I06B I09A
		I09B I09C I09D
		I09E
	09	J01A J01B

CHOP	MDC	DRG
	11	L33Z
	21A	W01A W01B W01C
	21B	X06A X06B X07A
		X07B
	Prä	B61A B61B B61C
7A.A3↔		BORP EML MBOR
		VAC VAC I VAC II
		VBOR
	01	B03A B03B B03C
	04	E36A E36B
	06	G12A G16A G33Z
		G38A G38B G38C
	07	H33Z
	08	I10A I10B I10C
	11	L33Z
	21A	W01A W01B W01C
	21B	X06A X06B X06C
		X07A X07B
7A.A4.11↔		BORP EML MBOR
		VAC VAC I VAC II
		VBOR
	01	B03A B03B B03C
	04	E36A E36B
	06	G12A G16A G33Z
		G38A G38B G38C
	07	H33Z
	08	I10A I10B I10C
	09	J01A J01B
	11	L33Z
	21A	W01A W01B W01C
	21B	X06A X06B X06C
7A.A4.12↔		BORP EML MBOR
		VAC VAC I VAC II
		VBOR
	01	B03A B03B B03C
	04	E36A E36B
	06	G12A G16A G33Z
		G38A G38B G38C
	07	H33Z
	08	I10A I10B I10C
	09	J01A J01B
	11	L33Z
	21A	W01A W01B W01C
	21B	X06A X06B X06C
7A.A4.13↔		BORP EML MBOR
		VAC VAC I VAC II
		VBOR
	01	B03A B03B B03C
	04	E36A E36B
	06	G12A G16A G33Z
		G38A G38B G38C
	07	H33Z
	08	I10A I10B I10C
	09	J01A J01B
	11	L33Z
	21A	W01A W01B W01C
	21B	X06A X06B X06C
7A.A4.14↔		BORP EML MBOR
		VAC VAC I VAC II
		VBOR
	01	B03A B03B B03C
	04	E36A E36B
	06	G12A G16A G33Z
		G38A G38B G38C
	07	H33Z
	08	I10A I10B I10C
	09	J01A J01B
	11	L33Z
	21A	W01A W01B W01C
	21B	X06A X06B X06C

CHOP	MDC	DRG
7A.A4.15↔		BORP EML MBOR
		VAC VAC I VAC II
		VBOR
	01	B03A B03B B03C
	04	E36A E36B
	06	G12A G16A G33Z
		G38A G38B G38C
	07	H33Z
	08	I10A I10B I10C
	09	J01A J01B
	11	L33Z
	13	N11A N11B
	21A	W01A W01B W01C
	21B	X06A X06B X06C
7A.A4.16↔		BORP EML MBOR
		VAC VAC I VAC II
		VBOR
	01	B03A B03B B03C
	04	E36A E36B
	06	G12A G16A G33Z
		G38A G38B G38C
	07	H33Z
	08	I10A I10B I10C
	09	J01A J01B
	11	L33Z
	13	N11A N11B
	21A	W01A W01B W01C
	21B	X06A X06B X06C
7A.A4.19↔		BORP EML MBOR
		VAC VAC I VAC II
		VBOR
	01	B03A B03B B03C
	04	E36A E36B
	06	G12A G16A G33Z
		G38A G38B G38C
	07	H33Z
	08	I10A I10B I10C
	09	J01A J01B
	11	L33Z
	13	N11A N11B
	21A	W01A W01B W01C
	21B	X06A X06B X06C
7A.A6↔		BORP EML MBOR
		VAC VAC I VAC II
		VBOR
	01	B03A B03B B03C
	04	E36A E36B
	06	G12A G16A G38A
		G38B
	08	I10A I10B I10C
	21A	W01A W01B W01C
	21B	X06A X06B X06C
80.01.00↔		BORP EML MBOR
		VAC VAC I VAC II
		VBOR
	04	E36A E36B
	05	F04Z F13A F13B
	06	G12A G16A G38A
		G38B
	08	I02A I02B I02C
		I12A I12B I12C
		I23A I23B
	21B	X06A X06B X06C
	Prä	B61B B61C B61D
80.01.09↔		BORP EML MBOR
		VAC VAC I VAC II
		VBOR
	04	E36A E36B
	05	F04Z F13A F13B
	06	G12A G16A G38A

CHOP	MDC	DRG
		G38B
	08	I02A I02B I02C I12A I12B I12C I23A I23B
	21B	X06A X06B X06C
	Prä	B61B B61C B61D
80.01.21↔		BORP EML MBOR VAC VAC I VAC II VBOR
	04	E36A E36B
	05	F04Z F13A F13B
	06	G12A G16A G38A G38B
	08	I02A I02B I02C I12A I12B I12C I23A I23B
	21B	X06A X06B X06C
	Prä	B61B B61C B61D
80.01.22↔		BORP EML MBOR VAC VAC I VAC II VBOR
	04	E36A E36B
	05	F04Z F13A F13B
	06	G12A G16A G38A G38B
	08	I02A I02B I02C I12A I12B I12C I23A I23B
	21B	X06A X06B X06C
	Prä	B61B B61C B61D
80.01.23↔		BORP EML MBOR VAC VAC I VAC II VBOR
	04	E36A E36B
	05	F04Z F13A F13B
	06	G12A G16A G38A G38B
	08	I02A I02B I02C I12A I12B I12C I23A I23B
	21B	X06A X06B X06C
	Prä	B61B B61C B61D
80.01.31↔		BORP EML MBOR VAC VAC I VAC II VBOR
	04	E36A E36B
	05	F04Z F13A F13B
	06	G12A G16A G38A G38B
	08	I02A I02B I02C I12A I12B I12C I23A I23B
	21B	X06A X06B X06C
	Prä	B61B B61C B61D
80.01.32↔		BORP EML MBOR VAC VAC I VAC II VBOR
	04	E36A E36B
	05	F04Z F13A F13B
	06	G12A G16A G38A G38B
	08	I02A I02B I02C I12A I12B I12C I23A I23B
	21B	X06A X06B X06C
	Prä	B61B B61C B61D
80.01.33↔		BORP EML MBOR VAC VAC I VAC II VBOR
	04	E36A E36B
	05	F04Z F13A F13B
	06	G12A G16A G38A G38B
	08	I02A I02B I02C I12A I12B I12C I23A I23B
	21B	X06A X06B X06C
	Prä	B61B B61C B61D
80.01.41↔		BORP EML MBOR VAC VAC I VAC II VBOR
	04	E36A E36B
	05	F04Z F13A F13B
	06	G12A G16A G38A G38B
	08	I02A I02B I02C I12A I12B I12C I23A I23B
	21B	X06A X06B X06C
	Prä	B61B B61C B61D
80.01.42↔		BORP EML MBOR VAC VAC I VAC II VBOR
	04	E36A E36B
	05	F04Z F13A F13B
	06	G12A G16A G38A G38B
	08	I02A I02B I02C I12A I12B I12C I23A I23B
	21B	X06A X06B X06C
	Prä	B61B B61C B61D
80.01.43↔		BORP EML MBOR VAC VAC I VAC II VBOR
	04	E36A E36B
	05	F04Z F13A F13B
	06	G12A G16A G38A G38B
	08	I02A I02B I02C I12A I12B I12C I23A I23B
	21B	X06A X06B X06C
	Prä	B61B B61C B61D
80.01.44↔		BORP EML MBOR VAC VAC I VAC II VBOR
	04	E36A E36B
	05	F04Z F13A F13B
	06	G12A G16A G38A G38B
	08	I02A I02B I02C I12A I12B I12C I23A I23B
	21B	X06A X06B X06C
	Prä	B61B B61C B61D
80.01.45↔		BORP EML MBOR VAC VAC I VAC II VBOR
	04	E36A E36B
	05	F04Z F13A F13B
	06	G12A G16A G38A G38B
	08	I02A I02B I02C I12A I12B I12C I23A I23B
	21B	X06A X06B X06C
	Prä	B61B B61C B61D
80.02↔		BORP EML MBOR VAC VAC I VAC II VBOR
	04	E36A E36B
	05	F04Z F13A F13B
	06	G12A G16A G38A G38B
	08	I02A I02B I02C I12A I12B I12C I23A I23B I23C
	21B	X06A X06B X06C
	Prä	B61B B61C B61D
80.03↔		BORP EML MBOR VAC VAC I VAC II VBOR
	04	E36A E36B
	05	F04Z F13A F13B
	06	G12A G16A G38A G38B
	08	I02A I02B I02C I12A I12B I12C I23A I23B
	21B	X05Z X06A X06B X06C
	Prä	B61B B61C B61D
80.04.00↔		BORP EML MBOR VAC VAC I VAC II VBOR
	04	E36A E36B
	05	F04Z F13A F13B
	06	G12A G16A G38A G38B
	08	I02A I02B I02C I12A I12B I12C I23A I23B I23C
	21B	X05Z X06A X06B X06C
	Prä	B61B B61C B61D
80.04.10↔		BORP EML MBOR VAC VAC I VAC II VBOR
	04	E36A E36B
	05	F04Z F13A F13B
	06	G12A G16A G38A G38B
	08	I02A I02B I02C I12A I12B I12C I23A I23B I23C
	21B	X05Z X06A X06B X06C
	Prä	B61B B61C B61D
80.04.11↔		BORP EML MBOR VAC VAC I VAC II VBOR
	04	E36A E36B
	05	F04Z F13A F13B
	06	G12A G16A G38A G38B
	08	I02A I02B I02C I12A I12B I12C I23A I23B I23C
	21B	X05Z X06A X06B X06C
	Prä	B61B B61C B61D
80.04.99↔		BORP EML MBOR VAC VAC I VAC II VBOR
	04	E36A E36B
	05	F04Z F13A F13B
	06	G12A G16A G38A G38B
	08	I02A I02B I02C

PROC

PROC

CHOP	MDC	DRG
		I12A I12B I12C
		I23A I23B I23C
	21B	X05Z X06A X06B
		X06C
	Prä	B61B B61C B61D
80.05.15↔		BORP EML MBOR
		VAC VAC I VAC II
		VBOR
	01	B03A B03B B03C
	04	E36A E36B
	05	F04Z F13A F13B
	06	G12A G16A G38A
		G38B
	08	I02A I02B I02C
		I03A I03B I08A
		I08B I08C I46A
		I46B I46C
	21B	X04Z
	Prä	A95A A95B B61B
		B61C
80.05.16↔		BORP EML MBOR
		VAC VAC I VAC II
		VBOR
	01	B03A B03B B03C
	04	E36A E36B
	05	F04Z F13A F13B
	06	G12A G16A G38A
		G38B
	08	I02A I02B I02C
		I03A I03B I08A
		I08B I08C I46A
		I46B I46C
	21B	X04Z
	Prä	A95A A95B B61B
		B61C
80.05.17↔		BORP EML MBOR
		VAC VAC I VAC II
		VBOR
	01	B03A B03B B03C
	04	E36A E36B
	05	F04Z F13A F13B
	06	G12A G16A G38A
		G38B
	08	I02A I02B I02C
		I03A I03B I08A
		I08B I08C I46A
		I46B I46C
	21B	X04Z
	Prä	A95A A95B B61B
		B61C
80.05.18↔		BORP EML MBOR
		VAC VAC I VAC II
		VBOR
	01	B03A B03B B03C
	04	E36A E36B
	05	F04Z F13A F13B
	06	G12A G16A G38A
		G38B
	08	I02A I02B I02C
		I03A I03B I08A
		I08B I08C I46A
		I46B I46C
	21B	X04Z
	Prä	A95A A95B B61B
		B61C
80.05.1A↔		BORP EML MBOR
		VAC VAC I VAC II
		VBOR
	01	B03A B03B B03C
	04	E36A E36B
	05	F04Z F13A F13B
	06	G12A G16A G38A
		G38B
	08	I02A I02B I02C
		I03A I03B I08A
		I08B I08C I46A
		I46B I46C
	21B	X04Z
	Prä	A95A A95B B61B
		B61C
80.05.1B↔		BORP EML MBOR
		VAC VAC I VAC II
		VBOR
	01	B03A B03B B03C
	04	E36A E36B
	05	F04Z F13A F13B
	06	G12A G16A G38A
		G38B
	08	I02A I02B I02C
		I03A I03B I08A
		I08B I08C I46A
		I46B I46C
	21B	X04Z
	Prä	A95A A95B B61B
		B61C
80.05.1C↔		BORP EML MBOR
		VAC VAC I VAC II
		VBOR
	01	B03A B03B B03C
	04	E36A E36B
	05	F04Z F13A F13B
	06	G12A G16A G38A
		G38B
	08	I02A I02B I02C
		I03A I03B I08A
		I08B I08C I46A
		I46B I46C
	21B	X04Z
	Prä	A95A A95B B61B
		B61C
80.05.1D↔		BORP EML MBOR
		VAC VAC I VAC II
		VBOR
	01	B03A B03B B03C
	04	E36A E36B
	05	F04Z F13A F13B
	06	G12A G16A G38A
		G38B
	08	I02A I02B I02C
		I03A I03B I08A
		I08B I08C I46A
		I46B I46C
	21B	X04Z
	Prä	A95A A95B B61B
		B61C
80.05.1E↔		BORP EML MBOR
		VAC VAC I VAC II
		VBOR
	01	B03A B03B B03C
	04	E36A E36B
	05	F04Z F13A F13B
	06	G12A G16A G38A
		G38B
	08	I02A I02B I02C
		I03A I03B I08A
		I08B I08C I46A
		I46B I46C
	21B	X04Z
	Prä	A95A A95B B61B
		B61C
80.05.1F↔		BORP EML MBOR
		VAC VAC I VAC II
		VBOR
	01	B03A B03B B03C
	04	E36A E36B
	05	F04Z F13A F13B
	06	G12A G16A G38A
		G38B
	08	I02A I02B I02C
		I03A I03B I08A
		I08B I08C I46A
		I46B I46C
	21B	X04Z
	Prä	A95A A95B B61B
		B61C
80.05.1G↔		BORP EML MBOR
		VAC VAC I VAC II
		VBOR
	01	B03A B03B B03C
	04	E36A E36B
	05	F04Z F13A F13B
	06	G12A G16A G38A
		G38B
	08	I02A I02B I02C
		I03A I03B I08A
		I08B I08C I46A
		I46B I46C
	21B	X04Z
	Prä	A95A A95B B61B
		B61C
80.05.99↔		BORP EML MBOR
		VAC VAC I VAC II
		VBOR
	01	B03A B03B B03C
	04	E36A E36B
	05	F04Z F13A F13B
	06	G12A G16A G38A
		G38B
	08	I02A I02B I02C
		I03A I03B I08A
		I08B I08C I46A
		I46B I46C
	21B	X04Z
	Prä	A95A A95B B61B
		B61C
80.06.00↔		BORP EML MBOR
		VAC VAC I VAC II
		VBOR
	04	E36A E36B
	05	F04Z F13A F13B
	06	G12A G16A G38A
		G38B
	08	I02A I02B I02C
		I12A I12B I12C
		I44A I44B
	21B	X04Z
	Prä	B61B B61C B61D
80.06.11↔		BORP EML MBOR
		VAC VAC I VAC II
		VBOR
	04	E36A E36B
	05	F04Z F13A F13B
	06	G12A G16A G38A
		G38B
	08	I02A I02B I02C
		I04A I04B I04C
		I12A I12B I12C
		I44A I44B
	21B	X04Z
	Prä	A95A A95B B61B

CHOP	MDC	DRG
		B61C B61D
80.06.12↔		BORP EML MBOR VAC VAC I VAC II VBOR
	04	E36A E36B
	05	F04Z F13A F13B
	06	G12A G16A G38A G38B
	08	I02A I02B I02C I04A I04B I04C I12A I12B I12C I44A I44B
	21B	X04Z
	Prä	A95A A95B B61B B61C B61D
80.06.13↔		BORP EML MBOR VAC VAC I VAC II VBOR
	04	E36A E36B
	05	F04Z F13A F13B
	06	G12A G16A G38A G38B
	08	I02A I02B I02C I04A I04B I04C I12A I12B I12C I44A I44B
	21B	X04Z
	Prä	A95A A95B B61B B61C B61D
80.06.14↔		BORP EML MBOR VAC VAC I VAC II VBOR
	04	E36A E36B
	05	F04Z F13A F13B
	06	G12A G16A G38A G38B
	08	I02A I02B I02C I04A I04B I04C I12A I12B I12C I44A I44B
	21B	X04Z
	Prä	A95A A95B B61B B61C B61D
80.06.15↔		BORP EML MBOR VAC VAC I VAC II VBOR
	04	E36A E36B
	05	F04Z F13A F13B
	06	G12A G16A G38A G38B
	08	I02A I02B I02C I04A I04B I04C I12A I12B I12C I44A I44B
	21B	X04Z
	Prä	A95A A95B B61B B61C B61D
80.06.16↔		BORP EML MBOR VAC VAC I VAC II VBOR
	04	E36A E36B
	05	F04Z F13A F13B
	06	G12A G16A G38A G38B
	08	I02A I02B I02C I04A I04B I04C I12A I12B I12C I44A I44B
	21B	X04Z
	Prä	A95A A95B B61B

CHOP	MDC	DRG
		B61C B61D
80.06.17↔		BORP EML MBOR VAC VAC I VAC II VBOR
	04	E36A E36B
	05	F04Z F13A F13B
	06	G12A G16A G38A G38B
	08	I02A I02B I02C I04A I04B I04C I12A I12B I12C I44A I44B
	21B	X04Z
	Prä	A95A A95B B61B B61C B61D
80.06.18↔		BORP EML MBOR VAC VAC I VAC II VBOR
	04	E36A E36B
	05	F04Z F13A F13B
	06	G12A G16A G38A G38B
	08	I02A I02B I02C I04A I04B I04C I12A I12B I12C I44A I44B
	21B	X04Z
	Prä	A95A A95B B61B B61C B61D
80.06.1A↔		BORP EML MBOR VAC VAC I VAC II VBOR
	04	E36A E36B
	05	F04Z F13A F13B
	06	G12A G16A G38A G38B
	08	I02A I02B I02C I04A I04B I04C I12A I12B I12C I44A I44B
	21B	X04Z
	Prä	A95A A95B B61B B61C B61D
80.06.1B↔		BORP EML MBOR VAC VAC I VAC II VBOR
	04	E36A E36B
	05	F04Z F13A F13B
	06	G12A G16A G38A G38B
	08	I02A I02B I02C I04A I04B I04C I12A I12B I12C I44A I44B
	21B	X04Z
	Prä	A95A A95B B61B B61C B61D
80.06.1C↔		BORP EML MBOR VAC VAC I VAC II VBOR
	04	E36A E36B
	05	F04Z F13A F13B
	06	G12A G16A G38A G38B
	08	I02A I02B I02C I04A I04B I04C I12A I12B I12C I44A I44B
	21B	X04Z
	Prä	A95A A95B B61B

CHOP	MDC	DRG
		B61C B61D
80.06.99↔		BORP EML MBOR VAC VAC I VAC II VBOR
	04	E36A E36B
	05	F04Z F13A F13B
	06	G12A G16A G38A G38B
	08	I02A I02B I02C I04A I04B I04C I12A I12B I12C I44A I44B
	21B	X04Z
	Prä	A95A A95B B61B B61C B61D
80.07↔		BORP EML MBOR VAC VAC I VAC II VBOR
	04	E36A E36B
	05	F04Z F13A F13B
	06	G12A G16A G38A G38B
	08	I02A I02B I02C I12A I12B I12C I23A I23B
	21B	X04Z X06A X06B X06C
	Prä	B61B B61C B61D
80.08↔		BORP EML MBOR VAC VAC I VAC II VBOR
	04	E36A E36B
	05	F04Z F13A F13B
	06	G12A G16A G38A G38B
	08	I02A I02B I02C I12A I12B I12C I23A I23B I23C
	21B	X04Z X06A X06B X06C
	Prä	B61B B61C B61D
80.09↔		BORP MBOR VAC VBOR
	04	E36A E36B
	05	F04Z F13A F13B
	06	G12A G16A G38A G38B
	08	I02A I02B I02C I12A I12B I12C I23A I23B I28A I28B
	21B	X04Z X05Z X06A X06B X06C
	Prä	B61B B61C B61D
80.11.00↔		BORP EML MBOR VAC VAC I VAC II VBOR
	04	E36A E36B
	06	G12A G16A G38A G38B
	08	I29A I29B I29C
	21B	X06A X06B X06C
80.11.10↔		BORP EML MBOR VAC VAC I VAC II VBOR
	04	E36A E36B
	06	G12A G16A G38A G38B
	08	I02A I02B I02C I12A I12B I12C

PROC

PROC

CHOP	MDC	DRG
		I29A I29B I29C
	21B	X06A X06B X06C
	Prä	B61B B61C B61D
80.11.11↔		BORP EML MBOR
		VAC VAC I VAC II
		VBOR
	04	E36A E36B
	06	G12A G16A G38A
		G38B
	08	I29A I29B I29C
	21B	X06A X06B X06C
80.11.12↔		BORP EML MBOR
		VAC VAC I VAC II
		VBOR
	04	E36A E36B
	06	G12A G16A G38A
		G38B
	08	I02A I02B I02C
		I12A I12B I12C
		I29A I29B I29C
	21B	X06A X06B X06C
	Prä	B61B B61C B61D
80.11.13↔		BORP EML MBOR
		VAC VAC I VAC II
		VBOR
	04	E36A E36B
	06	G12A G16A G38A
		G38B
	08	I29A I29B I29C
	21B	X06A X06B X06C
80.11.19↔		BORP EML MBOR
		VAC VAC I VAC II
		VBOR
	04	E36A E36B
	06	G12A G16A G38A
		G38B
	08	I29A I29B I29C
	21B	X06A X06B X06C
80.11.20↔		BORP EML MBOR
		VAC VAC I VAC II
		VBOR
	04	E36A E36B
	06	G12A G16A G38A
		G38B
	08	I02A I02B I02C
		I12A I12B I12C
		I29A I29B I29C
	21B	X06A X06B X06C
	Prä	B61B B61C B61D
80.11.21↔		BORP EML MBOR
		VAC VAC I VAC II
		VBOR
	04	E36A E36B
	06	G12A G16A G38A
		G38B
	08	I29A I29B I29C
	21B	X06A X06B X06C
80.11.22↔		BORP EML MBOR
		VAC VAC I VAC II
		VBOR
	04	E36A E36B
	06	G12A G16A G38A
		G38B
	08	I02A I02B I02C
		I12A I12B I12C
		I29A I29B I29C
	21B	X06A X06B X06C
	Prä	B61B B61C B61D
80.11.23↔		BORP EML MBOR
		VAC VAC I VAC II
		VBOR
	04	E36A E36B
	06	G12A G16A G38A
		G38B
	08	I29A I29B I29C
	21B	X06A X06B X06C
80.11.29↔		BORP EML MBOR
		VAC VAC I VAC II
		VBOR
	04	E36A E36B
	06	G12A G16A G38A
		G38B
	08	I29A I29B I29C
	21B	X06A X06B X06C
80.11.99↔		BORP EML MBOR
		VAC VAC I VAC II
		VBOR
	04	E36A E36B
	06	G12A G16A G38A
		G38B
	08	I29A I29B I29C
	21B	X06A X06B X06C
80.12.00↔		BORP EML MBOR
		VAC VAC I VAC II
		VBOR
	04	E36A E36B
	05	F04Z F13A F13B
	06	G12A G16A G38A
		G38B
	08	I31A I31B
	10	K09A K09B
	21B	X06A X06B X06C
80.12.10↔		BORP EML MBOR
		VAC VAC I VAC II
		VBOR
	04	E36A E36B
	05	F04Z F13A F13B
	06	G12A G16A G38A
		G38B
	08	I02A I02B I02C
		I12A I12B I12C
		I31A I31B
	10	K09A K09B
	21B	X06A X06B X06C
	Prä	B61B B61C B61D
80.12.11↔		BORP EML MBOR
		VAC VAC I VAC II
		VBOR
	04	E36A E36B
	05	F04Z F13A F13B
	06	G12A G16A G38A
		G38B
	08	I31A I31B
	10	K09A K09B
	21B	X06A X06B X06C
80.12.12↔		BORP EML MBOR
		VAC VAC I VAC II
		VBOR
	04	E36A E36B
	05	F04Z F13A F13B
	06	G12A G16A G38A
		G38B
	08	I02A I02B I02C
		I12A I12B I12C
		I31A I31B
	10	K09A K09B
	21B	X06A X06B X06C
	Prä	B61B B61C B61D
80.12.20↔		BORP EML MBOR
		VAC VAC I VAC II
		VBOR
	04	E36A E36B
	05	F04Z F13A F13B
	06	G12A G16A G38A
		G38B
	08	I02A I02B I02C
		I12A I12B I12C
		I31A I31B
	10	K09A K09B
	21B	X06A X06B X06C
	Prä	B61B B61C B61D
80.12.21↔		BORP EML MBOR
		VAC VAC I VAC II
		VBOR
	04	E36A E36B
	05	F04Z F13A F13B
	06	G12A G16A G38A
		G38B
	08	I31A I31B
	10	K09A K09B
	21B	X06A X06B X06C
80.12.99↔		BORP EML MBOR
		VAC VAC I VAC II
		VBOR
	04	E36A E36B
	05	F04Z F13A F13B
	06	G12A G16A G38A
		G38B
	08	I31A I31B
	10	K09A K09B
	21B	X06A X06B X06C
80.13.00↔		BORP EML MBOR
		VAC VAC I VAC II
		VBOR
	04	E36A E36B
	05	F04Z F13A F13B
	06	G12A G16A G38A
		G38B
	08	I02A I02B I02C
		I32A I32B I32C
		I32D I32E I32F
	09	J02A J02B J03A
		J03B J04Z J11A
		J11B
	21B	X05Z
80.13.10↔		BORP EML MBOR
		VAC VAC I VAC II
		VBOR
	04	E36A E36B
	05	F04Z F13A F13B
	06	G12A G16A G38A
		G38B
	08	I02A I02B I02C
		I12A I12B I12C
		I32A I32B I32C
		I32D I32E I32F
	09	J02A J02B J03A
		J03B J04Z J11A
		J11B
	21B	X05Z
	Prä	B61B B61C B61D
80.13.11↔		BORP EML MBOR
		VAC VAC I VAC II
		VBOR
	04	E36A E36B
	05	F04Z F13A F13B
	06	G12A G16A G38A
		G38B
	08	I02A I02B I02C
		I32A I32B I32C

CHOP	MDC	DRG
		I32D I32E I32F
	09	J02A J02B J03A J03B J04Z J11A J11B
	21B	X05Z
80.13.12↔		BORP EML MBOR VAC VAC I VAC II VBOR
	04	E36A E36B
	05	F04Z F13A F13B
	06	G12A G16A G38A G38B
	08	I02A I02B I02C I12A I12B I12C I32A I32B I32C I32D I32E I32F
	09	J02A J02B J03A J03B J04Z J11A J11B
	21B	X05Z
	Prä	B61B B61C B61D
80.13.20↔		BORP EML MBOR VAC VAC I VAC II VBOR
	04	E36A E36B
	05	F04Z F13A F13B
	06	G12A G16A G38A G38B
	08	I02A I02B I02C I12A I12B I12C I32A I32B I32C I32D I32E I32F
	09	J02A J02B J03A J03B J04Z J11A J11B
	21B	X05Z
	Prä	B61B B61C B61D
80.13.21↔		BORP EML MBOR VAC VAC I VAC II VBOR
	04	E36A E36B
	05	F04Z F13A F13B
	06	G12A G16A G38A G38B
	08	I02A I02B I02C I32A I32B I32C I32D I32E I32F
	09	J02A J02B J03A J03B J04Z J11A J11B
	21B	X05Z
80.13.99↔		BORP EML MBOR VAC VAC I VAC II VBOR
	04	E36A E36B
	05	F04Z F13A F13B
	06	G12A G16A G38A G38B
	08	I02A I02B I02C I32A I32B I32C I32D I32E I32F
	09	J02A J02B J03A J03B J04Z J11A J11B
	21B	X05Z
80.14.00↔		BORP EML MBOR VAC VAC I VAC II VBOR
	04	E36A E36B
	05	F04Z F13A F13B
	06	G12A G16A G38A G38B
	08	I02A I02B I02C I32A I32B I32C I32D I32E I32F
	09	J02A J02B J03A J03B J04Z J11A J11B
	21B	X05Z
80.14.10↔		BORP EML MBOR VAC VAC I VAC II VBOR
	04	E36A E36B
	05	F04Z F13A F13B
	06	G12A G16A G38A G38B
	08	I02A I02B I02C I12A I12B I12C I32A I32B I32C I32D I32E I32F
	09	J02A J02B J03A J03B J04Z J11A J11B
	21B	X05Z
	Prä	B61B B61C B61D
80.14.99↔		BORP EML MBOR VAC VAC I VAC II VBOR
	04	E36A E36B
	05	F04Z F13A F13B
	06	G12A G16A G38A G38B
	08	I02A I02B I02C I32A I32B I32C I32D I32E I32F
	09	J02A J02B J03A J03B J04Z J11A J11B
	21B	X05Z
80.15.00↔		BORP EML MBOR VAC VAC I VAC II VBOR
	04	E36A E36B
	06	G12A G16A G38A G38B
	08	I02A I02B I02C I08A I08B I08C I21A I21B
	09	J02A J02B J03A J03B J04Z J11A J11B
	21B	X06A X06B X06C
80.15.10↔		BORP EML MBOR VAC VAC I VAC II VBOR
	04	E36A E36B
	06	G12A G16A G38A G38B
	08	I02A I02B I02C I08A I08B I08C I12A I12B I12C I21A I21B
	09	J02A J02B J03A J03B J04Z J11A J11B
	21B	X06A X06B X06C
	Prä	B61B B61C B61D
80.15.11↔		BORP EML MBOR VAC VAC I VAC II VBOR
	04	E36A E36B
	06	G12A G16A G38A G38B
	08	I02A I02B I02C I08A I08B I08C I21A I21B
	09	J02A J02B J03A J03B J04Z J11A J11B
	21B	X06A X06B X06C
80.15.12↔		BORP EML MBOR VAC VAC I VAC II VBOR
	04	E36A E36B
	06	G12A G16A G38A G38B
	08	I02A I02B I02C I08A I08B I08C I12A I12B I12C I21A I21B
	09	J02A J02B J03A J03B J04Z J11A J11B
	21B	X06A X06B X06C
	Prä	B61B B61C B61D
80.15.20↔		BORP EML MBOR VAC VAC I VAC II VBOR
	04	E36A E36B
	06	G12A G16A G38A G38B
	08	I02A I02B I02C I08A I08B I08C I12A I12B I12C I21A I21B
	09	J02A J02B J03A J03B J04Z J11A J11B
	21B	X06A X06B X06C
	Prä	B61B B61C B61D
80.15.21↔		BORP EML MBOR VAC VAC I VAC II VBOR
	04	E36A E36B
	06	G12A G16A G38A G38B
	08	I02A I02B I02C I08A I08B I08C I21A I21B
	09	J02A J02B J03A J03B J04Z J11A J11B
	21B	X06A X06B X06C
80.15.99↔		BORP EML MBOR VAC VAC I VAC II VBOR
	04	E36A E36B
	06	G12A G16A G38A G38B
	08	I02A I02B I02C I08A I08B I08C I21A I21B
	09	J02A J02B J03A J03B J04Z J11A J11B
	21B	X06A X06B X06C
80.16.00↔		BORP EML MBOR VAC VAC I VAC II VBOR
	04	E36A E36B

PROC

PROC

CHOP	MDC	DRG
	05	F04Z F13A F13B
	06	G12A G16A G38A G38B
	08	I18A I18B I18C I30A I30B I30C
	09	J02A J02B J03A J03B J04Z J11A J11B
	10	K09A K09B
	21B	X04Z
80.16.10↔		BORP EML MBOR VAC VAC I VAC II VBOR
	04	E36A E36B
	05	F04Z F13A F13B
	06	G12A G16A G38A G38B
	08	I02A I02B I02C I12A I12B I12C I18A I18B I18C I30A I30B I30C
	09	J02A J02B J03A J03B J04Z J11A J11B
	10	K09A K09B
	21B	X04Z
	Prä	B61B B61C B61D
80.16.11↔		BORP EML MBOR VAC VAC I VAC II VBOR
	04	E36A E36B
	05	F04Z F13A F13B
	06	G12A G16A G38A G38B
	08	I18A I18B I18C I30A I30B I30C
	09	J02A J02B J03A J03B J04Z J11A J11B
	10	K09A K09B
	21B	X04Z
80.16.12↔		BORP EML MBOR VAC VAC I VAC II VBOR
	04	E36A E36B
	05	F04Z F13A F13B
	06	G12A G16A G38A G38B
	08	I02A I02B I02C I12A I12B I18A I18B I18C I30A I30B I30C
	09	J02A J02B J03A J03B J04Z J11A J11B
	10	K09A K09B
	21B	X04Z
	Prä	B61B B61C B61D
80.16.20↔		BORP EML MBOR VAC VAC I VAC II VBOR
	04	E36A E36B
	05	F04Z F13A F13B
	06	G12A G16A G38A G38B
	08	I02A I02B I02C I12A I12B I12C I18A I18B I18C I30A I30B I30C
	09	J02A J02B J03A J03B J04Z J11A J11B
	10	K09A K09B
	21B	X04Z
	Prä	B61B B61C B61D
80.16.21↔		BORP EML MBOR VAC VAC I VAC II VBOR
	04	E36A E36B
	05	F04Z F13A F13B
	06	G12A G16A G38A G38B
	08	I18A I18B I18C I30A I30B I30C
	09	J02A J02B J03A J03B J04Z J11A J11B
	10	K09A K09B
	21B	X04Z
80.16.99↔		BORP EML MBOR VAC VAC I VAC II VBOR
	04	E36A E36B
	05	F04Z F13A F13B
	06	G12A G16A G38A G38B
	08	I18A I18B I18C I30A I30B I30C
	09	J02A J02B J03A J03B J04Z J11A J11B
	10	K09A K09B
	21B	X04Z
80.17.10↔		BORP EML MBOR VAC VAC I VAC II VBOR
	04	E36A E36B
	06	G12A G16A G38A G38B
	08	I02A I02B I02C I12A I12B I12C I13A I13B I13C I13D
	09	J02A J02B J03A J03B J04Z J11A J11B
	21B	X04Z
	Prä	B61B B61C B61D
80.17.11↔		BORP EML MBOR VAC VAC I VAC II VBOR
	04	E36A E36B
	06	G12A G16A G38A G38B
	08	I13A I13B I13C I13D
	09	J02A J02B J03A J03B J04Z J11A J11B
	21B	X04Z
80.17.12↔		BORP EML MBOR VAC VAC I VAC II VBOR
	04	E36A E36B
	06	G12A G16A G38A G38B
	08	I02A I02B I02C I12A I12B I12C I13A I13B I13C I13D
	09	J02A J02B J03A J03B J04Z J11A J11B
	21B	X04Z
	Prä	B61B B61C B61D
80.17.20↔		BORP EML MBOR VAC VAC I VAC II VBOR
	04	E36A E36B
	06	G12A G16A G38A G38B
	08	I02A I02B I02C I12A I12B I12C I13A I13B I13C I13D
	09	J02A J02B J03A J03B J04Z J11A J11B
	21B	X04Z
	Prä	B61B B61C B61D
80.17.21↔		BORP EML MBOR VAC VAC I VAC II VBOR
	04	E36A E36B
	06	G12A G16A G38A G38B
	08	I13A I13B I13C I13D
	09	J02A J02B J03A J03B J04Z J11A J11B
	21B	X04Z
80.17.29↔		BORP EML MBOR VAC VAC I VAC II VBOR
	04	E36A E36B
	06	G12A G16A G38A G38B
	08	I13A I13B I13C I13D
	09	J02A J02B J03A J03B J04Z J11A J11B
	21B	X04Z
80.17.30↔		BORP EML MBOR VAC VAC I VAC II VBOR
	04	E36A E36B
	06	G12A G16A G38A G38B
	08	I02A I02B I02C I12A I12B I12C I13A I13B I13C I13D
	09	J02A J02B J03A J03B J04Z J11A J11B
	21B	X04Z
	Prä	B61B B61C B61D
80.17.31↔		BORP EML MBOR VAC VAC I VAC II VBOR
	04	E36A E36B
	06	G12A G16A G38A G38B
	08	I13A I13B I13C I13D
	09	J02A J02B J03A J03B J04Z J11A J11B

CHOP	MDC	DRG
	21B	X04Z
80.17.32↔		BORP EML MBOR VAC VAC I VAC II VBOR
	04	E36A E36B
	06	G12A G16A G38A G38B
	08	I02A I02B I02C I12A I12B I12C I13A I13B I13C I13D
	09	J02A J02B J03A J03B J04Z J11A J11B
	21B	X04Z
	Prä	B61B B61C B61D
80.17.40↔		BORP EML MBOR VAC VAC I VAC II VBOR
	04	E36A E36B
	06	G12A G16A G38A G38B
	08	I02A I02B I02C I12A I12B I12C I13A I13B I13C I13D
	09	J02A J02B J03A J03B J04Z J11A J11B
	21B	X04Z
	Prä	B61B B61C B61D
80.17.41↔		BORP EML MBOR VAC VAC I VAC II VBOR
	04	E36A E36B
	06	G12A G16A G38A G38B
	08	I13A I13B I13C I13D
	09	J02A J02B J03A J03B J04Z J11A J11B
	21B	X04Z
80.17.49↔		BORP EML MBOR VAC VAC I VAC II VBOR
	04	E36A E36B
	06	G12A G16A G38A G38B
	08	I13A I13B I13C I13D
	09	J02A J02B J03A J03B J04Z J11A J11B
	21B	X04Z
80.17.99↔		BORP EML MBOR VAC VAC I VAC II VBOR
	04	E36A E36B
	06	G12A G16A G38A G38B
	08	I13A I13B I13C I13D
	09	J02A J02B J03A J03B J04Z J11A J11B
	21B	X04Z
80.18.10↔		BORP EML MBOR VAC VAC I VAC II VBOR
	04	E36A E36B
	05	F04Z F13A F13B
	06	G12A G16A G38A G38B
	08	I02A I02B I02C I12A I12B I12C I20A I20B I20C I20D I20G
	09	J02A J02B J03A J03B J04Z J11A J11B
	10	K09A K09B
	21B	X04Z
	Prä	B61B B61C B61D
80.18.11↔		BORP EML MBOR VAC VAC I VAC II VBOR
	04	E36A E36B
	05	F04Z F13A F13B
	06	G12A G16A G38A G38B
	08	I20A I20B I20C I20D I20G
	09	J02A J02B J03A J03B J04Z J11A J11B
	10	K09A K09B
	21B	X04Z
80.18.12↔		BORP EML MBOR VAC VAC I VAC II VBOR
	04	E36A E36B
	05	F04Z F13A F13B
	06	G12A G16A G38A G38B
	08	I02A I02B I02C I12A I12B I12C I20A I20B I20C I20D I20G
	09	J02A J02B J03A J03B J04Z J11A J11B
	10	K09A K09B
	21B	X04Z
	Prä	B61B B61C B61D
80.18.20↔		BORP EML MBOR VAC VAC I VAC II VBOR
	04	E36A E36B
	05	F04Z F13A F13B
	06	G12A G16A G38A G38B
	08	I02A I02B I02C I12A I12B I12C I20A I20B I20C I20D I20G
	09	J02A J02B J03A J03B J04Z J11A J11B
	10	K09A K09B
	21B	X04Z
	Prä	B61B B61C B61D
80.18.21↔		BORP EML MBOR VAC VAC I VAC II VBOR
	04	E36A E36B
	05	F04Z F13A F13B
	06	G12A G16A G38A G38B
	08	I20A I20B I20C I20D I20G
	09	J02A J02B J03A J03B J04Z J11A J11B
	10	K09A K09B
	21B	X04Z
80.18.99↔		BORP EML MBOR VAC VAC I VAC II VBOR
	04	E36A E36B
	05	F04Z F13A F13B
	06	G12A G16A G38A G38B
	08	I20A I20B I20C I20D I20G
	09	J02A J02B J03A J03B J04Z J11A J11B
	10	K09A K09B
	21B	X04Z
80.19.00↔		BORP MBOR VAC VAC I VAC II VBOR
	04	E36A E36B
	05	F04Z F13A F13B
	06	G12A G16A G38A G38B
	08	I28A I28B
	09	J02A J02B J03A J03B J04Z J11A J11B
	10	K09A K09B
	21B	X04Z X06A X06B X06C
80.19.10↔		BORP EML MBOR VAC VAC I VAC II VBOR
	04	E36A E36B
	05	F04Z F13A F13B
	06	G12A G16A G38A G38B
	08	I02A I02B I02C I12A I12B I12C I29A I29B I29C
	09	J02A J02B J03A J03B J04Z J11A J11B
	10	K09A K09B
	21B	X04Z X06A X06B X06C
	Prä	B61B B61C B61D
80.19.11↔		BORP EML MBOR VAC VAC I VAC II VBOR
	04	E36A E36B
	05	F04Z F13A F13B
	06	G12A G16A G38A G38B
	08	I29A I29B I29C
	09	J02A J02B J03A J03B J04Z J11A J11B
	10	K09A K09B
	21B	X04Z X06A X06B X06C
80.19.12↔		BORP EML MBOR VAC VAC I VAC II VBOR
	04	E36A E36B
	05	F04Z F13A F13B
	06	G12A G16A G38A

PROC

PROC

CHOP	MDC	DRG
		G38B
	08	I02A I02B I02C I12A I12B I12C I29A I29B I29C
	09	J02A J02B J03A J03B J04Z J11A J11B
	10	K09A K09B
	21B	X04Z X06A X06B X06C
	Prä	B61B B61C B61D
80.19.20↔		BORP EML MBOR VAC VAC I VAC II VBOR
	04	E36A E36B
	05	F04Z F13A F13B
	06	G12A G16A G38A G38B
	08	I02A I02B I02C I12A I12B I12C I29A I29B I29C
	09	J02A J02B J03A J03B J04Z J11A J11B
	10	K09A K09B
	21B	X04Z X06A X06B X06C
	Prä	B61B B61C B61D
80.19.21↔		BORP EML MBOR VAC VAC I VAC II VBOR
	04	E36A E36B
	05	F04Z F13A F13B
	06	G12A G16A G38A G38B
	08	I29A I29B I29C
	09	J02A J02B J03A J03B J04Z J11A J11B
	10	K09A K09B
	21B	X04Z X06A X06B X06C
80.19.29↔		BORP EML MBOR VAC VAC I VAC II VBOR
	04	E36A E36B
	05	F04Z F13A F13B
	06	G12A G16A G38A G38B
	08	I29A I29B I29C
	09	J02A J02B J03A J03B J04Z J11A J11B
	10	K09A K09B
	21B	X04Z X06A X06B X06C
80.19.30↔		BORP EML MBOR VAC VAC I VAC II VBOR
	04	E36A E36B
	06	G12A G16A G38A G38B
	08	I28A I28B I28C
	09	J02A J02B J03A J03B J04Z J11A J11B
	21B	X04Z
80.19.31↔		BORP EML MBOR VAC VAC I VAC II VBOR
	04	E36A E36B
	06	G12A G16A G38A G38B
	08	I28A I28B I28C
	09	J02A J02B J03A J03B J04Z J11A J11B
	21B	X04Z
80.19.32↔		BORP EML MBOR VAC VAC I VAC II VBOR
	04	E36A E36B
	06	G12A G16A G38A G38B
	08	I28A I28B I28C
	09	J02A J02B J03A J03B J04Z J11A J11B
	21B	X04Z
80.19.40↔		BORP EML MBOR VAC VAC I VAC II VBOR
	04	E36A E36B
	06	G12A G16A G38A G38B
	08	I28A I28B I28C
	09	J02A J02B J03A J03B J04Z J11A J11B
	21B	X04Z
80.19.41↔		BORP EML MBOR VAC VAC I VAC II VBOR
	04	E36A E36B
	06	G12A G16A G38A G38B
	08	I28A I28B I28C
	09	J02A J02B J03A J03B J04Z J11A J11B
	21B	X04Z
80.19.49↔		BORP EML MBOR VAC VAC I VAC II VBOR
	04	E36A E36B
	06	G12A G16A G38A G38B
	08	I28A I28B I28C
	09	J02A J02B J03A J03B J04Z J11A J11B
	21B	X04Z
80.19.52↔		BORP EML MBOR VAC VAC I VAC II VBOR
	04	E36A E36B
	06	G12A G16A G38A G38B
	08	I28A I28B I28C
	09	J02A J02B J03A J03B J04Z J11A J11B
	21B	X04Z
80.19.59↔		BORP EML MBOR VAC VAC I VAC II VBOR
	04	E36A E36B
	06	G12A G16A G38A G38B
	08	I28A I28B I28C
	09	J02A J02B J03A J03B J04Z J11A J11B
	21B	X04Z
80.19.90↔		BORP MBOR VAC VAC I VAC II VBOR
	04	E36A E36B
	05	F04Z F13A F13B
	06	G12A G16A G38A G38B
	08	I02A I02B I02C I12A I12B I12C I28A I28B
	09	J02A J02B J03A J03B J04Z J11A J11B
	10	K09A K09B
	21B	X04Z X06A X06B X06C
	Prä	B61B B61C B61D
80.19.91↔		BORP MBOR VAC VAC I VAC II VBOR
	04	E36A E36B
	05	F04Z F13A F13B
	06	G12A G16A G38A G38B
	08	I28A I28B
	09	J02A J02B J03A J03B J04Z J11A J11B
	10	K09A K09B
	21B	X04Z X06A X06B X06C
80.19.92↔		BORP MBOR VAC VAC I VAC II VBOR
	04	E36A E36B
	05	F04Z F13A F13B
	06	G12A G16A G38A G38B
	08	I02A I02B I02C I12A I12B I12C I28A I28B
	09	J02A J02B J03A J03B J04Z J11A J11B
	10	K09A K09B
	21B	X04Z X06A X06B X06C
	Prä	B61B B61C B61D
80.19.93↔		BORP MBOR VAC VAC I VAC II VBOR
	04	E36A E36B
	05	F04Z F13A F13B
	06	G12A G16A G38A G38B
	08	I02A I02B I02C I12A I12B I12C I28A I28B
	09	J02A J02B J03A J03B J04Z J11A J11B
	10	K09A K09B
	21B	X04Z X06A X06B X06C
	Prä	B61B B61C B61D
80.19.94↔		BORP MBOR VAC VAC I VAC II VBOR
	04	E36A E36B
	05	F04Z F13A F13B
	06	G12A G16A G38A

CHOP	MDC	DRG
		G38B
	08	I28A I28B
	09	J02A J02B J03A J03B J04Z J11A J11B
	10	K09A K09B
	21B	X04Z X06A X06B X06C
80.19.99↔		BORP MBOR VAC VAC I VAC II VBOR
	04	E36A E36B
	05	F04Z F13A F13B
	06	G12A G16A G38A G38B
	08	I28A I28B
	09	J02A J02B J03A J03B J04Z J11A J11B
	10	K09A K09B
	21B	X04Z X06A X06B X06C
80.21↔	08	I29A I29B I29C
	21B	X06A X06B X06C
80.22↔	08	I31A I31B
	21B	X06A X06B X06C
80.23↔	08	I02A I02B I02C I32A I32B I32C I32D I32E I32F
	21B	X05Z
80.24↔	08	I02A I02B I02C I32A I32B I32C I32D I32E I32F
	21B	X05Z X06A X06B X06C
80.25↔	08	I21A I21B
	21B	X04Z
80.26↔	08	I18A I18B I18C
	21B	X04Z
80.27↔	08	I20A I20B I20C I20D I20E I20F I20G
	21B	X04Z
80.28↔	08	I20A I20B I20C I20D I20E I20F I20G
	21B	X04Z X06A X06B X06C
80.29.10↔	03	D12A D12B
	08	I18A I18B I18C
	21B	X06A X06B X06C
80.29.11↔	08	I18A I18B I18C
	21B	X06A X06B X06C
80.29.99↔	08	I18A I18B I18C
	21B	X06A X06B X06C
80.31.10‡↔		AKBB
	01	B60A
	16	Q86A
80.31.20↔	04	E02A E02B E02C
	08	I29A I29B I29C
	21B	X06A X06B X06C
80.31.30↔	04	E02A E02B E02C
	08	I29A I29B I29C
	21B	X06A X06B X06C
80.31.99↔	04	E02A E02B E02C
	08	I29A I29B I29C
	21B	X06A X06B X06C
80.32.10‡↔		AKBB
	01	B60A
	16	Q86A
80.32.20↔	04	E02A E02B E02C
	08	I31A I31B
	21B	X06A X06B X06C
80.32.30↔	04	E02A E02B E02C
	08	I31A I31B
	21B	X06A X06B X06C
80.32.99↔	04	E02A E02B E02C
	08	I31A I31B
	21B	X06A X06B X06C
80.33.10‡↔		AKBB
	01	B60A
	16	Q86A
80.33.20↔	04	E02A E02B E02C
	08	I02A I02B I02C I32A I32B I32C I32D I32E I32F
	21B	X05Z X06A X06B X06C
80.33.30↔	04	E02A E02B E02C
	08	I02A I02B I02C I32A I32B I32C I32D I32E I32F
	21B	X05Z X06A X06B X06C
80.33.99↔	04	E02A E02B E02C
	08	I02A I02B I02C I32A I32B I32C I32D I32E I32F
	21B	X05Z X06A X06B X06C
80.34.10‡↔		AKBB
	01	B60A
	16	Q86A
80.34.20↔	04	E02A E02B E02C
	08	I02A I02B I02C I32A I32B I32C I32D I32E I32F
	21B	X05Z X06A X06B X06C
80.34.30↔	04	E02A E02B E02C
	08	I02A I02B I02C I32A I32B I32C I32D I32E I32F
	21B	X05Z X06A X06B X06C
80.34.99↔	04	E02A E02B E02C
	08	I02A I02B I02C I32A I32B I32C I32D I32E I32F
	21B	X05Z X06A X06B X06C
80.35.10‡↔		AKBB
	01	B60A
	16	Q86A
80.35.20↔	08	I02A I02B I02C I08A I08B I08C I21A I21B
	21B	X04Z
80.35.30↔	08	I02A I02B I02C I08A I08B I08C I21A I21B
	21B	X04Z
80.35.99↔	08	I02A I02B I02C I08A I08B I08C I21A I21B
	21B	X04Z
80.36.10‡↔		AKBB
	01	B60A
	16	Q86A
80.36.20↔	04	E02A E02B E02C
	05	F04Z F13A F13B F13C
	08	I18A I18B I18C
	10	K09A K09B
	21B	X04Z X06A X06B X06C
80.36.30↔	04	E02A E02B E02C
	05	F04Z F13A F13B F13C
	08	I18A I18B I18C
	10	K09A K09B
	21B	X04Z X06A X06B X06C
80.36.99↔	04	E02A E02B E02C
	05	F04Z F13A F13B F13C
	08	I18A I18B I18C
	10	K09A K09B
	21B	X04Z X06A X06B X06C
80.37.10‡↔		AKBB
	01	B60A
	16	Q86A
80.37.20↔	04	E02A E02B E02C
	08	I20A I20B I20C I20D I20E I20F I20G
	21B	X04Z X06A X06B X06C
80.37.30↔	04	E02A E02B E02C
	08	I18A I18B I18C
	21B	X04Z X06A X06B X06C
80.37.99↔	04	E02A E02B E02C
	08	I18A I18B I18C
	21B	X04Z X06A X06B X06C
80.38.10‡↔		AKBB
	01	B60A
	16	Q86A
80.38.20↔	04	E02A E02B E02C
	08	I20A I20B I20C I20D I20E I20F I20G
	21B	X04Z X06A X06B X06C
80.38.30↔	04	E02A E02B E02C
	08	I20A I20B I20C I20D I20E I20F I20G
	21B	X04Z X06A X06B X06C
80.38.99↔	04	E02A E02B E02C
	08	I20A I20B I20C I20D I20E I20F I20G
	21B	X04Z X06A X06B X06C
80.39.10‡↔		AKBB
	01	B60A
	16	Q86A
80.39.21↔	04	E02A E02B E02C
	08	I18A I18B I18C
	21B	X06A X06B X06C
80.39.29↔	03	D12A D12B
	04	E02A E02B E02C
	08	I18A I18B I18C
	21B	X06A X06B X06C
80.39.30↔	03	D12A D12B
	04	E02A E02B E02C
	08	I18A I18B I18C

PROC

CHOP	MDC	DRG
	21B	X06A X06B X06C
80.39.99↔	03	D12A D12B
	04	E02A E02B E02C
	08	I18A I18B I18C
	21B	X06A X06B X06C
80.41.10↔	08	I59Z
	21B	X06A X06B X06C
80.41.20↔	08	I59Z
	21B	X06A X06B X06C
80.41.99↔	08	I59Z
	21B	X06A X06B X06C
80.42↔	08	I31A I31B
	21B	X06A X06B X06C
80.43.10↔	08	I02A I02B I02C
		I32A I32B I32C
		I32D I32E I32F
	21B	X05Z
80.43.99↔	08	I02A I02B I02C
		I32A I32B I32C
		I32D I32E I32F
	21B	X05Z
80.44.10↔	08	I02A I02B I02C
		I32A I32B I32C
		I32D I32E I32F
	09	J02A J02B J03A
		J03B J04Z J11A
		J11B
	21B	X05Z
80.44.11↔	08	I02A I02B I02C
		I32A I32B I32C
		I32D I32E I32F
	09	J02A J02B J03A
		J03B J04Z J11A
		J11B
	21B	X05Z
80.44.99↔	08	I02A I02B I02C
		I32A I32B I32C
		I32D I32E I32F
	09	J02A J02B J03A
		J03B J04Z J11A
		J11B
	21B	X05Z
80.45↔	08	I21A I21B
	21B	X04Z
80.46.10↔	01	B03A B03B B03C
	08	I18A I18B I18C
		I30A I30B I30C
	21B	X04Z
80.46.20↔	01	B03A B03B B03C
	08	I18A I18B I18C
		I30A I30B I30C
	21B	X04Z
80.46.99↔	01	B03A B03B B03C
	08	I18A I18B I18C
		I30A I30B I30C
	21B	X04Z
80.47.10↔	08	I59Z
	21B	X04Z
80.47.20↔	08	I59Z
	21B	X04Z
80.47.99↔	08	I59Z
	21B	X04Z
80.48.10↔	08	I20A I20B I20C
		I20D I20E I20F
		I20G
	21B	X04Z
80.48.20↔	08	I20A I20B I20C
		I20D I20E I20F
		I20G
	21B	X04Z
80.48.99↔	08	I20A I20B I20C
		I20D I20E I20F
		I20G
	21B	X04Z
80.49.10↔	08	I59Z
80.49.20↔	08	I21A I21B
80.49.30↔	08	I21A I21B
80.6X.00↔		BORP EML MBOR
		VAC VAC I VAC II
		VBOR
	01	B03A B03B B03C
	04	E36A E36B
	05	F04Z F13A F13B
		F13C
	06	G12A G16A G38A
		G38B
	08	I18A I18B I18C
		I30A I30B I30C
	10	K09A K09B
	21B	X04Z
80.6X.10↔		BORP EML MBOR
		VAC VAC I VAC II
		VBOR
	01	B03A B03B B03C
	04	E36A E36B
	05	F04Z F13A F13B
		F13C
	06	G12A G16A G38A
		G38B
	08	I18A I18B I18C
		I30A I30B I30C
	10	K09A K09B
	21B	X04Z
80.6X.11↔		BORP EML MBOR
		VAC VAC I VAC II
		VBOR
	01	B03A B03B B03C
	04	E36A E36B
	05	F04Z F13A F13B
		F13C
	06	G12A G16A G38A
		G38B
	08	I18A I18B I18C
		I30A I30B I30C
	10	K09A K09B
	21B	X04Z
80.6X.20↔		BORP EML MBOR
		VAC VAC I VAC II
		VBOR
	01	B03A B03B B03C
	04	E36A E36B
	05	F04Z F13A F13B
		F13C
	06	G12A G16A G38A
		G38B
	08	I18A I18B I18C
		I30A I30B I30C
	10	K09A K09B
	21B	X04Z
80.6X.21↔		BORP EML MBOR
		VAC VAC I VAC II
		VBOR
	01	B03A B03B B03C
	04	E36A E36B
	05	F04Z F13A F13B
		F13C
	06	G12A G16A G38A
		G38B
	08	I18A I18B I18C
		I30A I30B I30C
	10	K09A K09B
	21B	X04Z
80.6X.99↔		BORP EML MBOR
		VAC VAC I VAC II
		VBOR
	01	B03A B03B B03C
	04	E36A E36B
	05	F04Z F13A F13B
		F13C
	06	G12A G16A G38A
		G38B
	08	I18A I18B I18C
		I30A I30B I30C
	10	K09A K09B
	21B	X04Z
80.71.00↔		BORP EML MBOR
		VAC VAC I VAC II
		VBOR
	04	E36A E36B
	05	F04Z F13A F13B
	06	G12A G16A G38A
		G38B
	08	I02A I02B I02C
		I12A I12B I12C
		I29A I29B I29C
	21B	X06A X06B X06C
	Prä	B61B B61C B61D
80.71.10↔		BORP EML MBOR
		VAC VAC I VAC II
		VBOR
	04	E36A E36B
	05	F04Z F13A F13B
	06	G12A G16A G38A
		G38B
	08	I02A I02B I02C
		I12A I12B I12C
		I29A I29B I29C
	21B	X06A X06B X06C
	Prä	B61B B61C B61D
80.71.11↔		BORP EML MBOR
		VAC VAC I VAC II
		VBOR
	04	E36A E36B
	05	F04Z F13A F13B
	06	G12A G16A G38A
		G38B
	08	I02A I02B I02C
		I12A I12B I12C
		I29A I29B I29C
	21B	X06A X06B X06C
	Prä	B61B B61C B61D
80.71.99↔		BORP EML MBOR
		VAC VAC I VAC II
		VBOR
	04	E36A E36B
	05	F04Z F13A F13B
	06	G12A G16A G38A
		G38B
	08	I02A I02B I02C
		I12A I12B I12C
		I29A I29B I29C
	21B	X06A X06B X06C
	Prä	B61B B61C B61D
80.72.00↔		BORP EML MBOR
		VAC VAC I VAC II
		VBOR
	04	E36A E36B
	05	F04Z F13A F13B
	06	G12A G16A G38A
		G38B

CHOP	MDC	DRG
	08	I02A I02B I02C I12A I12B I12C I31A I31B
	21B	X06A X06B X06C
	Prä	B61B B61C B61D
80.72.10↔		BORP EML MBOR VAC VAC I VAC II VBOR
	04	E36A E36B
	05	F04Z F13A F13B
	06	G12A G16A G38A G38B
	08	I02A I02B I02C I12A I12B I12C I31A I31B
	21B	X06A X06B X06C
	Prä	B61B B61C B61D
80.72.20↔		BORP EML MBOR VAC VAC I VAC II VBOR
	04	E36A E36B
	05	F04Z F13A F13B
	06	G12A G16A G38A G38B
	08	I02A I02B I02C I12A I12B I12C I31A I31B
	21B	X06A X06B X06C
	Prä	B61B B61C B61D
80.72.99↔		BORP EML MBOR VAC VAC I VAC II VBOR
	04	E36A E36B
	05	F04Z F13A F13B
	06	G12A G16A G38A G38B
	08	I02A I02B I02C I12A I12B I12C I31A I31B
	21B	X06A X06B X06C
	Prä	B61B B61C B61D
80.73.00↔		BORP EML MBOR VAC VAC I VAC II VBOR
	04	E36A E36B
	05	F04Z F13A F13B
	06	G12A G16A G38A G38B
	08	I02A I02B I02C I12A I12B I12C I32A I32B I32C I32D I32E I32F
	09	J02A J02B J03A J03B J04Z J11A J11B
	21B	X05Z
	Prä	B61B B61C B61D
80.73.10↔		BORP EML MBOR VAC VAC I VAC II VBOR
	04	E36A E36B
	05	F04Z F13A F13B
	06	G12A G16A G38A G38B
	08	I02A I02B I02C I12A I12B I12C I32A I32B I32C I32D I32E I32F
	09	J02A J02B J03A J03B J04Z J11A J11B
	21B	X05Z
	Prä	B61B B61C B61D
80.73.20↔		BORP EML MBOR VAC VAC I VAC II VBOR
	04	E36A E36B
	05	F04Z F13A F13B
	06	G12A G16A G38A G38B
	08	I02A I02B I02C I12A I12B I12C I32A I32B I32C I32D I32E I32F
	09	J02A J02B J03A J03B J04Z J11A J11B
	21B	X05Z
	Prä	B61B B61C B61D
80.73.99↔		BORP EML MBOR VAC VAC I VAC II VBOR
	04	E36A E36B
	05	F04Z F13A F13B
	06	G12A G16A G38A G38B
	08	I02A I02B I02C I12A I12B I12C I32A I32B I32C I32D I32E I32F
	09	J02A J02B J03A J03B J04Z J11A J11B
	21B	X05Z
	Prä	B61B B61C B61D
80.74↔	08	I02A I02B I02C I32A I32B I32C I32D I32E I32F
	09	J02A J02B J03A J03B J04Z J11A J11B
	21B	X05Z
80.75.00↔		BORP EML MBOR VAC VAC I VAC II VBOR
	04	E36A E36B
	05	F04Z F13A F13B
	06	G12A G16A G38A G38B
	08	I02A I02B I02C I12A I12B I12C I27A I27B I27C I27D
	09	J02A J02B J03A J03B J04Z J11A J11B
	21B	X04Z X06A X06B X06C
	Prä	B61B B61C B61D
80.75.10↔		BORP EML MBOR VAC VAC I VAC II VBOR
	04	E36A E36B
	05	F04Z F13A F13B
	06	G12A G16A G38A G38B
	08	I02A I02B I02C I12A I12B I12C I27A I27B I27C I27D
	09	J02A J02B J03A J03B J04Z J11A J11B
	21B	X04Z X06A X06B X06C
	Prä	B61B B61C B61D
80.75.20↔		BORP EML MBOR VAC VAC I VAC II VBOR
	04	E36A E36B
	05	F04Z F13A F13B
	06	G12A G16A G38A G38B
	08	I02A I02B I02C I12A I12B I12C I27A I27B I27C I27D
	09	J02A J02B J03A J03B J04Z J11A J11B
	21B	X04Z X06A X06B X06C
	Prä	B61B B61C B61D
80.75.99↔		BORP EML MBOR VAC VAC I VAC II VBOR
	04	E36A E36B
	05	F04Z F13A F13B
	06	G12A G16A G38A G38B
	08	I02A I02B I02C I12A I12B I12C I27A I27B I27C I27D
	09	J02A J02B J03A J03B J04Z J11A J11B
	21B	X04Z X06A X06B X06C
	Prä	B61B B61C B61D
80.76.00↔		BORP EML MBOR VAC VAC I VAC II VBOR
	04	E36A E36B
	05	F04Z F13A F13B
	06	G12A G16A G38A G38B
	08	I02A I02B I02C I12A I12B I12C I18A I18B I18C I30A I30B I30C
	09	J02A J02B J03A J03B J04Z J11A J11B
	21B	X04Z
	Prä	B61B B61C B61D
80.76.10↔		BORP EML MBOR VAC VAC I VAC II VBOR
	04	E36A E36B
	05	F04Z F13A F13B
	06	G12A G16A G38A G38B
	08	I02A I02B I02C I12A I12B I12C I18A I18B I18C I30A I30B I30C
	09	J02A J02B J03A J03B J04Z J11A J11B

PROC

CHOP	MDC	DRG
	21B	X04Z
	Prä	B61B B61C B61D
80.76.11↔		BORP EML MBOR VAC VAC I VAC II VBOR
	04	E36A E36B
	05	F04Z F13A F13B
	06	G12A G16A G38A G38B
	08	I02A I02B I02C I12A I12B I12C I18A I18B I18C I30A I30B I30C
	09	J02A J02B J03A J03B J04Z J11A J11B
	21B	X04Z
	Prä	B61B B61C B61D
80.76.20↔		BORP EML MBOR VAC VAC I VAC II VBOR
	04	E36A E36B
	05	F04Z F13A F13B
	06	G12A G16A G38A G38B
	08	I02A I02B I02C I12A I12B I18A I18B I18C I30A I30B I30C
	09	J02A J02B J03A J03B J04Z J11A J11B
	21B	X04Z
	Prä	B61B B61C B61D
80.76.21↔		BORP EML MBOR VAC VAC I VAC II VBOR
	04	E36A E36B
	05	F04Z F13A F13B
	06	G12A G16A G38A G38B
	08	I02A I02B I02C I12A I12B I12C I18A I18B I18C I30A I30B I30C
	09	J02A J02B J03A J03B J04Z J11A J11B
	21B	X04Z
	Prä	B61B B61C B61D
80.76.99↔		BORP EML MBOR VAC VAC I VAC II VBOR
	04	E36A E36B
	05	F04Z F13A F13B
	06	G12A G16A G38A G38B
	08	I02A I02B I02C I12A I12B I12C I18A I18B I18C I30A I30B I30C
	09	J02A J02B J03A J03B J04Z J11A J11B
	21B	X04Z
	Prä	B61B B61C B61D
80.77.10↔		BORP EML MBOR VAC VAC I VAC II VBOR
	04	E36A E36B
	06	G12A G16A G38A G38B
	08	I02A I02B I02C I12A I12B I12C I20A I20B I20C I20D I20E I20F I20G
	09	J02A J02B J03A J03B J04Z J11A J11B
	21B	X04Z
	Prä	B61B B61C B61D
80.77.11↔		BORP EML MBOR VAC VAC I VAC II VBOR
	04	E36A E36B
	06	G12A G16A G38A G38B
	08	I02A I02B I02C I12A I12B I12C I20A I20B I20C I20D I20E I20F I20G
	09	J02A J02B J03A J03B J04Z J11A J11B
	21B	X04Z
	Prä	B61B B61C B61D
80.77.20↔		BORP EML MBOR VAC VAC I VAC II VBOR
	04	E36A E36B
	06	G12A G16A G38A G38B
	08	I02A I02B I02C I12A I12B I12C I20A I20B I20C I20D I20E I20F I20G
	09	J02A J02B J03A J03B J04Z J11A J11B
	21B	X04Z
	Prä	B61B B61C B61D
80.77.21↔		BORP EML MBOR VAC VAC I VAC II VBOR
	04	E36A E36B
	06	G12A G16A G38A G38B
	08	I02A I02B I02C I12A I12B I12C I20A I20B I20C I20D I20E I20F I20G
	09	J02A J02B J03A J03B J04Z J11A J11B
	21B	X04Z
	Prä	B61B B61C B61D
80.77.99↔		BORP EML MBOR VAC VAC I VAC II VBOR
	04	E36A E36B
	06	G12A G16A G38A G38B
	08	I02A I02B I02C I12A I12B I12C I20A I20B I20C I20D I20E I20F I20G
	09	J02A J02B J03A J03B J04Z J11A J11B
	21B	X04Z
	Prä	B61B B61C B61D
80.78.10↔		BORP EML MBOR VAC VAC I VAC II VBOR
	04	E36A E36B
	05	F04Z F13A F13B
	06	G12A G16A G38A G38B
	08	I02A I02B I02C I12A I12B I12C I20A I20B I20C I20D I20G
	09	J02A J02B J03A J03B J04Z J11A J11B
	21B	X04Z
	Prä	B61B B61C B61D
80.78.11↔		BORP EML MBOR VAC VAC I VAC II VBOR
	04	E36A E36B
	05	F04Z F13A F13B
	06	G12A G16A G38A G38B
	08	I02A I02B I02C I12A I12B I12C I20A I20B I20C I20D I20G
	09	J02A J02B J03A J03B J04Z J11A J11B
	21B	X04Z
	Prä	B61B B61C B61D
80.78.19↔		BORP EML MBOR VAC VAC I VAC II VBOR
	04	E36A E36B
	05	F04Z F13A F13B
	06	G12A G16A G38A G38B
	08	I02A I02B I02C I12A I12B I12C I20A I20B I20C I20D I20G
	09	J02A J02B J03A J03B J04Z J11A J11B
	21B	X04Z
	Prä	B61B B61C B61D
80.78.20↔		BORP EML MBOR VAC VAC I VAC II VBOR
	01	B05Z
	04	E36A E36B
	05	F04Z F13A F13B
	06	G12A G16A G38A G38B
	08	I02A I02B I02C I12A I12B I12C I20A I20B I20C I20D I20G
	09	J02A J02B J03A J03B J04Z J11A J11B
	21B	X04Z

CHOP	MDC	DRG
	Prä	B61B B61C B61D
80.78.21↔		BORP EML MBOR VAC VAC I VAC II VBOR
	01	B05Z
	04	E36A E36B
	05	F04Z F13A F13B
	06	G12A G16A G38A G38B
	08	I02A I02B I02C I12A I12B I12C I20A I20B I20C I20D I20G
	09	J02A J02B J03A J03B J04Z J11A J11B
	21B	X04Z
	Prä	B61B B61C B61D
80.78.29↔		BORP EML MBOR VAC VAC I VAC II VBOR
	01	B05Z
	04	E36A E36B
	05	F04Z F13A F13B
	06	G12A G16A G38A G38B
	08	I02A I02B I02C I12A I12B I12C I20A I20B I20C I20D I20G
	09	J02A J02B J03A J03B J04Z J11A J11B
	21B	X04Z
	Prä	B61B B61C B61D
80.78.99↔		BORP EML MBOR VAC VAC I VAC II VBOR
	04	E36A E36B
	05	F04Z F13A F13B
	06	G12A G16A G38A G38B
	08	I02A I02B I02C I12A I12B I12C I20A I20B I20C I20D I20G
	09	J02A J02B J03A J03B J04Z J11A J11B
	21B	X04Z
	Prä	B61B B61C B61D
80.79.10↔		BORP EML MBOR VAC VAC I VAC II VBOR
	04	E36A E36B
	05	F04Z F13A F13B
	06	G12A G16A G38A G38B
	08	I02A I02B I02C I12A I12B I12C I29A I29B I29C
	09	J02A J02B J03A J03B J04Z J11A J11B
	21B	X04Z X06A X06B X06C
	Prä	B61B B61C B61D
80.79.11↔		BORP EML MBOR VAC VAC I VAC II VBOR
	04	E36A E36B
	05	F04Z F13A F13B
	06	G12A G16A G38A G38B
	08	I02A I02B I02C I12A I12B I12C I27A I27B I27C I27D
	09	J02A J02B J03A J03B J04Z J11A J11B
	21B	X04Z X06A X06B X06C
	Prä	B61B B61C B61D
80.79.20↔		BORP EML MBOR VAC VAC I VAC II VBOR
	04	E36A E36B
	05	F04Z F13A F13B
	06	G12A G16A G38A G38B
	08	I02A I02B I02C I12A I12B I12C I29A I29B I29C
	09	J02A J02B J03A J03B J04Z J11A J11B
	21B	X04Z X06A X06B X06C
	Prä	B61B B61C B61D
80.79.21↔		BORP EML MBOR VAC VAC I VAC II VBOR
	04	E36A E36B
	05	F04Z F13A F13B
	06	G12A G16A G38A G38B
	08	I02A I02B I02C I12A I12B I12C I27A I27B I27C I27D
	09	J02A J02B J03A J03B J04Z J11A J11B
	21B	X04Z X06A X06B X06C
	Prä	B61B B61C B61D
80.79.22↔		BORP EML MBOR VAC VAC I VAC II VBOR
	04	E36A E36B
	05	F04Z F13A F13B
	06	G12A G16A G38A G38B
	08	I02A I02B I02C I12A I12B I12C I27A I27B I27C I27D
	09	J02A J02B J03A J03B J04Z J11A J11B
	21B	X04Z X06A X06B X06C
	Prä	B61B B61C B61D
80.81.10↔		BORP EML MBOR VAC VAC I VAC II VBOR
	01	B17A B17B
	04	E36A E36B
	05	F04Z F13A F13B F13C
	06	G12A G16A G38A G38B
	08	I59Z
	09	J02A J02B J03A J03B J04Z J11A J11B
	10	K09A K09B
	21B	X06A X06B X06C
80.81.11↔		BORP EML MBOR VAC VBOR
	01	B17A B17B
	04	E36A E36B
	05	F04Z F13A F13B F13C
	06	G12A G16A G38A G38B
	08	I59Z
	09	J02A J02B J03A J03B J04Z J11A J11B
	10	K09A K09B
	21B	X06A X06B X06C
80.81.19↔		BORP EML MBOR VAC VBOR
	01	B17A B17B
	04	E36A E36B
	05	F04Z F13A F13B F13C
	06	G12A G16A G38A G38B
	08	I59Z
	09	J02A J02B J03A J03B J04Z J11A J11B
	10	K09A K09B
	21B	X06A X06B X06C
80.81.20↔		BORP EML MBOR VAC VAC I VAC II VBOR
	01	B17A B17B
	04	E36A E36B
	05	F04Z F13A F13B F13C
	06	G12A G16A G38A G38B
	08	I59Z
	09	J02A J02B J03A J03B J04Z J11A J11B
	10	K09A K09B
	21B	X06A X06B X06C
80.81.21↔		BORP EML MBOR VAC VBOR
	01	B17A B17B
	04	E36A E36B
	05	F04Z F13A F13B F13C
	06	G12A G16A G38A G38B
	08	I59Z
	09	J02A J02B J03A J03B J04Z J11A J11B
	10	K09A K09B
	21B	X06A X06B X06C
80.81.29↔		BORP EML MBOR VAC VBOR
	01	B17A B17B
	04	E36A E36B

PROC

CHOP	MDC	DRG
	05	F04Z F13A F13B F13C
	06	G12A G16A G38A G38B
	08	I59Z
	09	J02A J02B J03A J03B J04Z J11A J11B
	10	K09A K09B
	21B	X06A X06B X06C
80.81.99↔		BORP EML MBOR VAC VBOR
	01	B17A B17B
	04	E36A E36B
	05	F04Z F13A F13B F13C
	06	G12A G16A G38A G38B
	08	I59Z
	09	J02A J02B J03A J03B J04Z J11A J11B
	10	K09A K09B
	21B	X06A X06B X06C
80.82.00↔		BORP EML MBOR VAC VBOR
	01	B17A B17B
	04	E36A E36B
	05	F04Z F13A F13B F13C
	06	G12A G16A G38A G38B
	08	I31A I31B
	09	J02A J02B J03A J03B J04Z J11A J11B
	10	K09A K09B
	21B	X06A X06B X06C
80.82.10↔		BORP EML MBOR VAC VBOR
	01	B17A B17B
	04	E36A E36B
	05	F04Z F13A F13B F13C
	06	G12A G16A G38A G38B
	08	I31A I31B
	09	J02A J02B J03A J03B J04Z J11A J11B
	10	K09A K09B
	21B	X06A X06B X06C
80.82.11↔		BORP EML MBOR VAC VAC I VAC II VBOR
	01	B17A B17B
	04	E36A E36B
	05	F04Z F13A F13B F13C
	06	G12A G16A G38A G38B
	08	I31A I31B
	09	J02A J02B J03A J03B J04Z J11A J11B
	10	K09A K09B
	21B	X06A X06B X06C
80.82.12↔		BORP EML MBOR VAC VBOR
	01	B17A B17B
	04	E36A E36B
	05	F04Z F13A F13B F13C
	06	G12A G16A G38A G38B
	08	I31A I31B
	09	J02A J02B J03A J03B J04Z J11A J11B
	10	K09A K09B
	21B	X06A X06B X06C
80.82.99↔		BORP EML MBOR VAC VBOR
	01	B17A B17B
	04	E36A E36B
	05	F04Z F13A F13B F13C
	06	G12A G16A G38A G38B
	08	I31A I31B
	09	J02A J02B J03A J03B J04Z J11A J11B
	10	K09A K09B
	21B	X06A X06B X06C
80.83.00↔		BORP EML MBOR VAC VBOR
	01	B17A B17B
	04	E36A E36B
	05	F04Z F13A F13B
	06	G12A G16A G38A G38B
	08	I02A I02B I02C I32A I32B I32C I32D I32E I32F
	09	J02A J02B J03A J03B J04Z J11A J11B
	10	K09A K09B
	21B	X05Z X06A X06B X06C
80.83.10↔		BORP EML MBOR VAC VBOR
	01	B17A B17B
	04	E36A E36B
	05	F04Z F13A F13B
	06	G12A G16A G38A G38B
	08	I02A I02B I02C I32A I32B I32C I32D I32E I32F
	09	J02A J02B J03A J03B J04Z J11A J11B
	10	K09A K09B
	21B	X05Z X06A X06B X06C
80.83.11↔		BORP EML MBOR VAC VAC I VAC II VBOR
	01	B17A B17B
	04	E36A E36B
	05	F04Z F13A F13B
	06	G12A G16A G38A G38B
	08	I02A I02B I02C I12A I12B I12C I32A I32B I32C I32D I32E I32F
	09	J02A J02B J03A J03B J04Z J11A J11B
	10	K09A K09B
	21B	X05Z X06A X06B X06C
80.83.12↔		BORP EML MBOR VAC VBOR
	01	B17A B17B
	04	E36A E36B
	05	F04Z F13A F13B
	06	G12A G16A G38A G38B
	08	I02A I02B I02C I32A I32B I32C I32D I32E I32F
	09	J02A J02B J03A J03B J04Z J11A J11B
	10	K09A K09B
	21B	X05Z X06A X06B X06C
80.83.99↔		BORP EML MBOR VAC VBOR
	01	B17A B17B
	04	E36A E36B
	05	F04Z F13A F13B
	06	G12A G16A G38A G38B
	08	I02A I02B I02C I32A I32B I32C I32D I32E I32F
	09	J02A J02B J03A J03B J04Z J11A J11B
	10	K09A K09B
	21B	X05Z X06A X06B X06C
80.84.00↔		BORP EML MBOR VAC VBOR
	04	E36A E36B
	06	G12A G16A G38A G38B
	08	I02A I02B I02C I32A I32B I32C I32D I32E I32F
	09	J02A J02B J03A J03B J04Z J11A J11B
	21B	X05Z
80.84.10↔		BORP EML MBOR VAC VAC I VAC II VBOR
	04	E36A E36B
	06	G12A G16A G38A G38B
	08	I02A I02B I02C I32A I32B I32C I32D I32E I32F
	09	J02A J02B J03A J03B J04Z J11A J11B
	21B	X05Z
80.84.20↔		BORP EML MBOR VAC VAC I VAC II VBOR
	04	E36A E36B
	06	G12A G16A G38A G38B
	08	I02A I02B I02C

CHOP	MDC	DRG
		I32A I32B I32C
		I32D I32E I32F
	09	J02A J02B J03A
		J03B J04Z J11A
		J11B
	21B	X05Z
80.84.99↔		BORP EML MBOR
		VAC VBOR
	04	E36A E36B
	06	G12A G16A G38A
		G38B
	08	I02A I02B I02C
		I32A I32B I32C
		I32D I32E I32F
	09	J02A J02B J03A
		J03B J04Z J11A
		J11B
	21B	X05Z
80.85.00↔		BORP EML MBOR
		VAC VBOR
	01	B17A B17B
	04	E36A E36B
	05	F04Z F13A F13B
	06	G12A G16A G38A
		G38B
	08	I21A I21B
	09	J02A J02B J03A
		J03B J04Z J11A
		J11B
	10	K09A K09B
	21B	X04Z X06A X06B
		X06C
80.85.10↔		BORP EML MBOR
		VAC VBOR
	01	B17A B17B
	04	E36A E36B
	05	F04Z F13A F13B
	06	G12A G16A G38A
		G38B
	08	I21A I21B
	09	J02A J02B J03A
		J03B J04Z J11A
		J11B
	10	K09A K09B
	21B	X04Z X06A X06B
		X06C
80.85.11↔		BORP EML MBOR
		VAC VAC I VAC II
		VBOR
	01	B17A B17B
	04	E36A E36B
	05	F04Z F13A F13B
	06	G12A G16A G38A
		G38B
	08	I21A I21B
	09	J02A J02B J03A
		J03B J04Z J11A
		J11B
	10	K09A K09B
	21B	X04Z X06A X06B
		X06C
80.85.12↔		BORP EML MBOR
		VAC VBOR
	01	B17A B17B
	04	E36A E36B
	05	F04Z F13A F13B
	06	G12A G16A G38A
		G38B
	08	I21A I21B
	09	J02A J02B J03A
		J03B J04Z J11A
		J11B
	10	K09A K09B
	21B	X04Z X06A X06B
		X06C
80.85.21↔		BORP EML MBOR
		VAC VBOR
	01	B17A B17B
	04	E36A E36B
	05	F04Z F13A F13B
	06	G12A G16A G38A
		G38B
	08	I21A I21B
	09	J02A J02B J03A
		J03B J04Z J11A
		J11B
	10	K09A K09B
	21B	X04Z X06A X06B
		X06C
80.85.22↔		BORP EML MBOR
		VAC VBOR
	01	B17A B17B
	04	E36A E36B
	05	F04Z F13A F13B
	06	G12A G16A G38A
		G38B
	08	I21A I21B
	09	J02A J02B J03A
		J03B J04Z J11A
		J11B
	10	K09A K09B
	21B	X04Z X06A X06B
		X06C
80.85.99↔		BORP EML MBOR
		VAC VBOR
	01	B17A B17B
	04	E36A E36B
	05	F04Z F13A F13B
	06	G12A G16A G38A
		G38B
	08	I21A I21B
	09	J02A J02B J03A
		J03B J04Z J11A
		J11B
	10	K09A K09B
	21B	X04Z X06A X06B
		X06C
80.86.00↔		BORP EML MBOR
		VAC VBOR
	01	B17A B17B
	04	E36A E36B
	05	F04Z F13A F13B
	06	G12A G16A G38A
		G38B
	08	I18A I18B I18C
		I30A I30B I30C
	09	J02A J02B J03A
		J03B J04Z J11A
		J11B
	10	K09A K09B
	21B	X04Z X06A X06B
		X06C
80.86.10↔		BORP EML MBOR
		VAC VBOR
	01	B17A B17B
	04	E36A E36B
	05	F04Z F13A F13B
	06	G12A G16A G38A
		G38B
	08	I18A I18B I18C
		I30A I30B I30C
	09	J02A J02B J03A
		J03B J04Z J11A
		J11B
	10	K09A K09B
	21B	X04Z X06A X06B
		X06C
80.86.11↔		BORP EML MBOR
		VAC VAC I VAC II
		VBOR
	01	B17A B17B
	04	E36A E36B
	05	F04Z F13A F13B
	06	G12A G16A G38A
		G38B
	08	I02A I02B I02C
		I12A I12B I12C
		I18A I18B I18C
		I30A I30B I30C
	09	J02A J02B J03A
		J03B J04Z J11A
		J11B
	10	K09A K09B
	21B	X04Z X06A X06B
		X06C
	Prä	B61B B61C B61D
80.86.12↔		BORP EML MBOR
		VAC VBOR
	01	B17A B17B
	04	E36A E36B
	05	F04Z F13A F13B
	06	G12A G16A G38A
		G38B
	08	I18A I18B I18C
		I30A I30B I30C
	09	J02A J02B J03A
		J03B J04Z J11A
		J11B
	10	K09A K09B
	21B	X04Z X06A X06B
		X06C
80.86.13↔		BORP EML MBOR
		VAC VBOR
	01	B17A B17B
	04	E36A E36B
	05	F04Z F13A F13B
	06	G12A G16A G38A
		G38B
	08	I18A I18B I18C
		I30A I30B I30C
	09	J02A J02B J03A
		J03B J04Z J11A
		J11B
	10	K09A K09B
	21B	X04Z X06A X06B
		X06C
80.86.99↔		BORP EML MBOR
		VAC VBOR
	01	B17A B17B
	04	E36A E36B
	05	F04Z F13A F13B
	06	G12A G16A G38A
		G38B
	08	I18A I18B I18C
		I30A I30B I30C
	09	J02A J02B J03A
		J03B J04Z J11A
		J11B
	10	K09A K09B
	21B	X04Z X06A X06B

PROC

CHOP	MDC	DRG
		X06C
80.87.10↔		BORP EML MBOR VAC VBOR
	01	B17A B17B
	04	E36A E36B
	05	F04Z F13A F13B
	06	G12A G16A G38A G38B
	08	I20A I20B I20C I20D I20E I20F I20G
	09	J02A J02B J03A J03B J04Z J11A J11B
	10	K09A K09B
	21B	X04Z X06A X06B X06C
80.87.11↔		BORP EML MBOR VAC VAC I VAC II VBOR
	01	B17A B17B
	04	E36A E36B
	05	F04Z F13A F13B
	06	G12A G16A G38A G38B
	08	I02A I02B I02C I12A I12B I12C I59Z
	09	J02A J02B J03A J03B J04Z J11A J11B
	10	K09A K09B
	21B	X04Z X06A X06B X06C
	Prä	B61B B61C B61D
80.87.12↔		BORP EML MBOR VAC VBOR
	01	B17A B17B
	04	E36A E36B
	05	F04Z F13A F13B
	06	G12A G16A G38A G38B
	08	I59Z
	09	J02A J02B J03A J03B J04Z J11A J11B
	10	K09A K09B
	21B	X04Z X06A X06B X06C
80.87.19↔		BORP EML MBOR VAC VBOR
	01	B17A B17B
	04	E36A E36B
	05	F04Z F13A F13B
	06	G12A G16A G38A G38B
	08	I59Z
	09	J02A J02B J03A J03B J04Z J11A J11B
	10	K09A K09B
	21B	X04Z X06A X06B X06C
80.87.20↔		BORP EML MBOR VAC VBOR
	01	B17A B17B
	04	E36A E36B
	05	F04Z F13A F13B
	06	G12A G16A G38A G38B
	08	I20A I20B I20C I20D I20E I20F I20G
	09	J02A J02B J03A J03B J04Z J11A J11B
	10	K09A K09B
	21B	X04Z X06A X06B X06C
80.87.21↔		BORP EML MBOR VAC VAC I VAC II VBOR
	01	B17A B17B
	04	E36A E36B
	05	F04Z F13A F13B
	06	G12A G16A G38A G38B
	08	I02A I02B I02C I12A I12B I12C I59Z
	09	J02A J02B J03A J03B J04Z J11A J11B
	10	K09A K09B
	21B	X04Z X06A X06B X06C
	Prä	B61B B61C B61D
80.87.22↔		BORP EML MBOR VAC VBOR
	01	B17A B17B
	04	E36A E36B
	05	F04Z F13A F13B
	06	G12A G16A G38A G38B
	08	I59Z
	09	J02A J02B J03A J03B J04Z J11A J11B
	10	K09A K09B
	21B	X04Z X06A X06B X06C
80.87.29↔		BORP EML MBOR VAC VBOR
	01	B17A B17B
	04	E36A E36B
	05	F04Z F13A F13B
	06	G12A G16A G38A G38B
	08	I59Z
	09	J02A J02B J03A J03B J04Z J11A J11B
	10	K09A K09B
	21B	X04Z X06A X06B X06C
80.87.99↔		BORP EML MBOR VAC VBOR
	01	B17A B17B
	04	E36A E36B
	05	F04Z F13A F13B
	06	G12A G16A G38A G38B
	08	I59Z
	09	J02A J02B J03A J03B J04Z J11A J11B
	10	K09A K09B
	21B	X04Z X06A X06B X06C
80.88.10↔		BORP EML MBOR VAC VBOR
	01	B17A B17B
	04	E36A E36B
	05	F04Z F13A F13B
	06	G12A G16A G38A G38B
	08	I20A I20B I20C I20D I20G
	09	J02A J02B J03A J03B J04Z J11A J11B
	10	K09A K09B
	21B	X04Z X06A X06B X06C
80.88.20↔		BORP EML MBOR VAC VAC I VAC II VBOR
	01	B17A B17B
	04	E36A E36B
	05	F04Z F13A F13B
	06	G12A G16A G38A G38B
	08	I02A I02B I02C I12A I12B I12C I20A I20B I20C I20D I20G
	09	J02A J02B J03A J03B J04Z J11A J11B
	10	K09A K09B
	21B	X04Z X06A X06B X06C
	Prä	B61B B61C B61D
80.88.21↔		BORP EML MBOR VAC VBOR
	01	B17A B17B
	04	E36A E36B
	05	F04Z F13A F13B
	06	G12A G16A G38A G38B
	08	I20A I20B I20C I20D I20G
	09	J02A J02B J03A J03B J04Z J11A J11B
	10	K09A K09B
	21B	X04Z X06A X06B X06C
80.88.29↔		BORP EML MBOR VAC VBOR
	01	B17A B17B
	04	E36A E36B
	05	F04Z F13A F13B
	06	G12A G16A G38A G38B
	08	I20A I20B I20C I20D I20G
	09	J02A J02B J03A J03B J04Z J11A J11B
	10	K09A K09B
	21B	X04Z X06A X06B X06C
80.88.30↔		BORP EML MBOR VAC VAC I VAC II VBOR
	01	B17A B17B
	04	E36A E36B
	05	F04Z F13A F13B
	06	G12A G16A G38A

CHOP	MDC	DRG
		G38B
	08	I02A I02B I02C I12A I12B I12C I20A I20B I20C I20D I20G
	09	J02A J02B J03A J03B J04Z J11A J11B
	10	K09A K09B
	21B	X04Z X06A X06B X06C
	Prä	B61B B61C B61D
80.88.40↔		BORP EML MBOR VAC VAC I VAC II VBOR
	01	B17A B17B
	04	E36A E36B
	05	F04Z F13A F13B
	06	G12A G16A G38A G38B
	08	I02A I02B I02C I12A I12B I12C I20A I20B I20C I20D I20G
	09	J02A J02B J03A J03B J04Z J11A J11B
	10	K09A K09B
	21B	X04Z X06A X06B X06C
	Prä	B61B B61C B61D
80.88.50↔		BORP EML MBOR VAC VBOR
	01	B17A B17B
	04	E36A E36B
	05	F04Z F13A F13B
	06	G12A G16A G38A G38B
	08	I20A I20B I20C I20D I20G
	09	J02A J02B J03A J03B J04Z J11A J11B
	10	K09A K09B
	21B	X04Z X06A X06B X06C
80.88.59↔		BORP EML MBOR VAC VBOR
	01	B17A B17B
	04	E36A E36B
	05	F04Z F13A F13B
	06	G12A G16A G38A G38B
	08	I20A I20B I20C I20D I20G
	09	J02A J02B J03A J03B J04Z J11A J11B
	10	K09A K09B
	21B	X04Z X06A X06B X06C
80.88.99↔		BORP EML MBOR VAC VBOR
	01	B17A B17B
	04	E36A E36B
	05	F04Z F13A F13B
	06	G12A G16A G38A G38B
	08	I20A I20B I20C I20D I20G
	09	J02A J02B J03A J03B J04Z J11A J11B
	10	K09A K09B
	21B	X04Z X06A X06B X06C
80.89.00↔		BORP MBOR VAC VBOR
	01	B17A B17B
	04	E36A E36B
	05	F04Z F13A F13B
	06	G12A G16A G38A G38B
	08	I28B I29A I29B I29C
	09	J02A J02B J03A J03B J04Z J11A J11B
	10	K09A K09B
	21B	X04Z X06A X06B X06C
80.89.10↔		BORP EML MBOR VAC VBOR
	04	E36A E36B
	06	G12A G16A G38A G38B
	08	I29A I29B I29C
	21B	X06A X06B X06C
80.89.11↔		BORP EML MBOR VAC VAC I VAC II VBOR
	04	E36A E36B
	06	G12A G16A G38A G38B
	08	I02A I02B I02C I12A I12B I12C I29A I29B I29C
	21B	X06A X06B X06C
	Prä	B61B B61C B61D
80.89.12↔		BORP EML MBOR VAC VBOR
	04	E36A E36B
	06	G12A G16A G38A G38B
	08	I29A I29B I29C
	21B	X06A X06B X06C
80.89.19↔		BORP EML MBOR VAC VBOR
	04	E36A E36B
	06	G12A G16A G38A G38B
	08	I29A I29B I29C
	21B	X06A X06B X06C
80.89.20↔		BORP EML MBOR VAC VBOR
	01	B17A B17B
	04	E36A E36B
	05	F04Z F13A F13B
	06	G12A G16A G38A G38B
	08	I18A I18B I18C I28B
	09	J02A J02B J03A J03B J04Z J11A J11B
	10	K09A K09B
	21B	X04Z X06A X06B X06C
80.89.21↔		BORP EML MBOR VAC VAC I VAC II VBOR
	01	B17A B17B
	04	E36A E36B
	05	F04Z F13A F13B
	06	G12A G16A G38A G38B
	08	I02A I02B I02C I10A I10B I10C I12A I12B I12C
	09	J02A J02B J03A J03B J04Z J11A J11B
	10	K09A K09B
	21A	W01A W01B W01C
	21B	X04Z X06A X06B X06C
	Prä	B61B B61C B61D
80.89.22↔		BORP EML MBOR VAC VBOR
	01	B17A B17B
	04	E36A E36B
	05	F04Z F13A F13B
	06	G12A G16A G38A G38B
	08	I10A I10B I10C
	09	J02A J02B J03A J03B J04Z J11A J11B
	10	K09A K09B
	21A	W01A W01B W01C
	21B	X04Z X06A X06B X06C
80.89.29↔		BORP EML MBOR VAC VBOR
	01	B17A B17B
	04	E36A E36B
	05	F04Z F13A F13B
	06	G12A G16A G38A G38B
	08	I10A I10B I10C
	09	J02A J02B J03A J03B J04Z J11A J11B
	10	K09A K09B
	21A	W01A W01B W01C
	21B	X04Z X06A X06B X06C
80.89.30↔		EML VAC I VAC II
	08	I23A I23B I23C
80.89.31↔		EML
	08	I23A I23B I23C
80.89.39↔		EML
	08	I23A I23B I23C
80.89.40↔	08	I18A I18B I18C
80.91.10↔		BORP EML MBOR VAC VBOR
	01	B17A B17B
	04	E36A E36B
	05	F04Z F13A F13B F13C
	06	G12A G16A G38A G38B
	08	I29A I29B I29C
	09	J02A J02B J03A J03B J04Z J11A J11B
	10	K09A K09B
	21B	X06A X06B X06C
80.91.11↔		BORP EML MBOR VAC VBOR

PROC

PROC

CHOP	MDC	DRG
	01	B17A B17B
	04	E36A E36B
	05	F04Z F13A F13B F13C
	06	G12A G16A G38A G38B
	08	I29A I29B I29C
	09	J02A J02B J03A J03B J04Z J11A J11B
	10	K09A K09B
	21B	X06A X06B X06C
80.91.20↔		BORP EML MBOR VAC VBOR
	01	B17A B17B
	04	E36A E36B
	05	F04Z F13A F13B F13C
	06	G12A G16A G38A G38B
	08	I29A I29B I29C
	09	J02A J02B J03A J03B J04Z J11A J11B
	10	K09A K09B
	21B	X06A X06B X06C
80.91.21↔		BORP EML MBOR VAC VBOR
	01	B17A B17B
	04	E36A E36B
	05	F04Z F13A F13B F13C
	06	G12A G16A G38A G38B
	08	I29A I29B I29C
	09	J02A J02B J03A J03B J04Z J11A J11B
	10	K09A K09B
	21B	X06A X06B X06C
80.92.10↔		BORP EML MBOR VAC VBOR
	01	B17A B17B
	04	E36A E36B
	05	F04Z F13A F13B F13C
	06	G12A G16A G38A G38B
	08	I27A I27B I27C I27D
	09	J02A J02B J03A J03B J04Z J11A J11B
	10	K09A K09B
	21B	X06A X06B X06C
80.92.11↔		BORP EML MBOR VAC VBOR
	01	B17A B17B
	04	E36A E36B
	05	F04Z F13A F13B F13C
	06	G12A G16A G38A G38B
	08	I27A I27B I27C I27D
	09	J02A J02B J03A J03B J04Z J11A J11B
	10	K09A K09B
	21B	X06A X06B X06C
80.93.11↔		BORP EML MBOR VAC VBOR
	01	B17A B17B
	04	E36A E36B
	05	F04Z F13A F13B F13C
	06	G12A G16A G38A G38B
	08	I02A I02B I02C I32A I32B I32C I32D I32E I32F
	09	J02A J02B J03A J03B J04Z J11A J11B
	10	K09A K09B
	21B	X05Z X06A X06B X06C
80.93.12↔		BORP EML MBOR VAC VBOR
	01	B17A B17B
	04	E36A E36B
	05	F04Z F13A F13B F13C
	06	G12A G16A G38A G38B
	08	I02A I02B I02C I32A I32B I32C I32D I32E I32F
	09	J02A J02B J03A J03B J04Z J11A J11B
	10	K09A K09B
	21B	X05Z X06A X06B X06C
80.93.13↔		BORP EML MBOR VAC VAC I VAC II VBOR
	04	E36A E36B
	06	G12A G16A G38A G38B
	08	I02A I02B I02C I32A I32B I32C I32D I32E I32F
	21B	X05Z
80.94.11↔		BORP EML MBOR VAC VAC I VAC II VBOR
	04	E36A E36B
	06	G12A G16A G38A G38B
	08	I02A I02B I02C I32A I32B I32C I32D I32E I32F
	21B	X05Z
80.94.12↔	08	I02A I02B I02C I32A I32B I32C I32D I32E I32F
80.95.10↔		BORP EML MBOR VAC VBOR
	01	B17A B17B
	04	E36A E36B
	05	F04Z F13A F13B F13C
	06	G12A G16A G38A G38B
	08	I27A I27B I27C I27D
	09	J02A J02B J03A J03B J04Z J11A J11B
	10	K09A K09B
	21B	X04Z X06A X06B X06C
80.95.11↔		BORP EML MBOR VAC VBOR
	01	B17A B17B
	04	E36A E36B
	05	F04Z F13A F13B F13C
	06	G12A G16A G38A G38B
	08	I27A I27B I27C I27D
	09	J02A J02B J03A J03B J04Z J11A J11B
	10	K09A K09B
	21B	X04Z X06A X06B X06C
80.95.99↔		BORP EML MBOR VAC VBOR
	01	B17A B17B
	04	E36A E36B
	05	F04Z F13A F13B F13C
	06	G12A G16A G38A G38B
	08	I27A I27B I27C I27D
	09	J02A J02B J03A J03B J04Z J11A J11B
	10	K09A K09B
	21B	X04Z X06A X06B X06C
80.96.10↔		BORP EML MBOR VAC VBOR
	01	B17A B17B
	04	E36A E36B
	05	F04Z F13A F13B F13C
	06	G12A G16A G38A G38B
	08	I18A I18B I18C
	09	J02A J02B J03A J03B J04Z J11A J11B
	10	K09A K09B
	21B	X04Z X06A X06B X06C
80.96.20↔		BORP EML MBOR VAC VBOR
	01	B17A B17B
	04	E36A E36B
	05	F04Z F13A F13B F13C
	06	G12A G16A G38A G38B
	08	I18A I18B I18C
	09	J02A J02B J03A J03B J04Z J11A J11B
	10	K09A K09B
	21B	X04Z X06A X06B X06C
80.96.21↔		BORP EML MBOR VAC VBOR
	01	B17A B17B
	04	E36A E36B
	05	F04Z F13A F13B

CHOP	MDC	DRG
		F13C
	06	G12A G16A G38A G38B
	08	I18A I18B I18C
	09	J02A J02B J03A J03B J04Z J11A J11B
	10	K09A K09B
	21B	X04Z X06A X06B X06C
80.97.10↔		BORP EML MBOR VAC VBOR
	01	B17A B17B
	04	E36A E36B
	05	F04Z F13A F13B F13C
	06	G12A G16A G38A G38B
	08	I20A I20B I20C I20D I20E I20F I20G
	09	J02A J02B J03A J03B J04Z J11A J11B
	10	K09A K09B
	21B	X04Z X06A X06B X06C
80.97.11↔		BORP EML MBOR VAC VBOR
	01	B17A B17B
	04	E36A E36B
	05	F04Z F13A F13B F13C
	06	G12A G16A G38A G38B
	08	I20A I20B I20C I20D I20E I20F I20G
	09	J02A J02B J03A J03B J04Z J11A J11B
	10	K09A K09B
	21B	X04Z X06A X06B X06C
80.97.20↔		BORP EML MBOR VAC VBOR
	01	B17A B17B
	04	E36A E36B
	05	F04Z F13A F13B F13C
	06	G12A G16A G38A G38B
	08	I20A I20B I20C I20D I20E I20F I20G
	09	J02A J02B J03A J03B J04Z J11A J11B
	10	K09A K09B
	21B	X04Z X06A X06B X06C
80.97.21↔		BORP EML MBOR VAC VBOR
	01	B17A B17B
	04	E36A E36B
	05	F04Z F13A F13B F13C
	06	G12A G16A G38A G38B
	08	I20A I20B I20C I20D I20E I20F I20G
	09	J02A J02B J03A J03B J04Z J11A J11B
	10	K09A K09B
	21B	X04Z X06A X06B X06C
80.97.30↔		BORP EML MBOR VAC VBOR
	01	B17A B17B
	04	E36A E36B
	05	F04Z F13A F13B F13C
	06	G12A G16A G38A G38B
	08	I20A I20B I20C I20D I20E I20F I20G
	09	J02A J02B J03A J03B J04Z J11A J11B
	10	K09A K09B
	21B	X04Z X06A X06B X06C
80.97.99↔		BORP EML MBOR VAC VBOR
	01	B17A B17B
	04	E36A E36B
	05	F04Z F13A F13B F13C
	06	G12A G16A G38A G38B
	08	I20A I20B I20C I20D I20E I20F I20G
	09	J02A J02B J03A J03B J04Z J11A J11B
	10	K09A K09B
	21B	X04Z X06A X06B X06C
80.98.10↔		BORP EML MBOR VAC VBOR
	01	B17A B17B
	04	E36A E36B
	05	F04Z F13A F13B F13C
	06	G12A G16A G38A G38B
	08	I20A I20B I20C I20D I20E I20F I20G
	09	J02A J02B J03A J03B J04Z J11A J11B
	10	K09A K09B
	21B	X04Z X06A X06B X06C
80.98.11↔		BORP EML MBOR VAC VBOR
	01	B17A B17B
	04	E36A E36B
	05	F04Z F13A F13B F13C
	06	G12A G16A G38A G38B
	08	I20A I20B I20C I20D I20E I20F I20G
	09	J02A J02B J03A J03B J04Z J11A J11B
	10	K09A K09B
	21B	X04Z X06A X06B X06C
80.98.12↔		BORP EML MBOR VAC VBOR
	01	B17A B17B
	04	E36A E36B
	05	F04Z F13A F13B F13C
	06	G12A G16A G38A G38B
	08	I20A I20B I20C I20D I20E I20F I20G
	09	J02A J02B J03A J03B J04Z J11A J11B
	10	K09A K09B
	21B	X04Z X06A X06B X06C
80.98.13↔		BORP EML MBOR VAC VBOR
	01	B17A B17B
	04	E36A E36B
	05	F04Z F13A F13B F13C
	06	G12A G16A G38A G38B
	08	I20A I20B I20C I20D I20E I20F I20G
	09	J02A J02B J03A J03B J04Z J11A J11B
	10	K09A K09B
	21B	X04Z X06A X06B X06C
80.98.99↔		BORP EML MBOR VAC VBOR
	01	B17A B17B
	04	E36A E36B
	05	F04Z F13A F13B F13C
	06	G12A G16A G38A G38B
	08	I20A I20B I20C I20D I20E I20F I20G
	09	J02A J02B J03A J03B J04Z J11A J11B
	10	K09A K09B
	21B	X04Z X06A X06B X06C
80.99.10↔		BORP EML MBOR VAC VBOR
	01	B17A B17B
	04	E36A E36B
	05	F04Z F13A F13B F13C
	06	G12A G16A G38A G38B
	08	I29A I29B I29C
	09	J02A J02B J03A J03B J04Z J11A J11B
	10	K09A K09B

PROC

CHOP	MDC	DRG
	21B	X04Z X06A X06B X06C
80.99.11↔		BORP EML MBOR VAC VBOR
	01	B17A B17B
	04	E36A E36B
	05	F04Z F13A F13B F13C
	06	G12A G16A G38A G38B
	08	I29A I29B I29C
	09	J02A J02B J03A J03B J04Z J11A J11B
	10	K09A K09B
	21B	X04Z X06A X06B X06C
80.99.20↔		BORP EML MBOR VAC VBOR
	01	B17A B17B
	04	E36A E36B
	05	F04Z F13A F13B F13C
	06	G12A G16A G38A G38B
	08	I27A I27B I27C I27D
	09	J02A J02B J03A J03B J04Z J11A J11B
	10	K09A K09B
	21B	X04Z X06A X06B X06C
80.99.21↔		BORP EML MBOR VAC VBOR
	01	B17A B17B
	04	E36A E36B
	05	F04Z F13A F13B F13C
	06	G12A G16A G38A G38B
	08	I27A I27B I27C I27D
	09	J02A J02B J03A J03B J04Z J11A J11B
	10	K09A K09B
	21B	X04Z X06A X06B X06C
80.99.30↔		BORP EML MBOR VAC VBOR
	01	B17A B17B
	04	E36A E36B
	05	F04Z F13A F13B F13C
	06	G12A G16A G38A G38B
	08	I27A I27B I27C I27D
	09	J02A J02B J03A J03B J04Z J11A J11B
	10	K09A K09B
	21B	X04Z X06A X06B X06C
80.99.31↔		BORP EML MBOR VAC VBOR
	01	B17A B17B
	04	E36A E36B
	05	F04Z F13A F13B F13C
	06	G12A G16A G38A G38B
	08	I27A I27B I27C I27D
	09	J02A J02B J03A J03B J04Z J11A J11B
	10	K09A K09B
	21B	X04Z X06A X06B X06C
81.11↔		BORP EML MBOR VAC VAC I VAC II VBOR
	01	B03A B03B B03C
	04	E36A E36B
	05	F04Z F13A F13B
	06	G12A G16A G33Z G38A G38B G38C
	07	H33Z
	08	I02A I02B I02C I03A I03B I12A I12B I12C I13A I13B I13C I13D I20A I20B I20C
	11	L33Z
	21B	X04Z X07A X07B
	Prä	A95A A95B B61B B61C B61D
81.12.10↔		BORP EML MBOR VAC VAC I VAC II VBOR
	01	B03A B03B B03C
	04	E36A E36B
	05	F04Z F13A F13B
	06	G12A G16A G33Z G38A G38B G38C
	07	H33Z
	08	I02A I02B I02C I03A I03B I12A I12B I12C I13A I13B I13C I13D I20A I20B I20C
	11	L33Z
	21B	X04Z X07A X07B
	Prä	A95A A95B B61B B61C B61D
81.12.11↔		BORP EML MBOR VAC VAC I VAC II VBOR
	01	B03A B03B B03C
	04	E36A E36B
	05	F04Z F13A F13B
	06	G12A G16A G33Z G38A G38B G38C
	07	H33Z
	08	I02A I02B I02C I03A I03B I12A I12B I12C I13A I13B I13C I13D I20A I20B I20C
	11	L33Z
	21B	X04Z X07A X07B
	Prä	A95A A95B B61B B61C B61D
81.12.12↔		BORP EML MBOR VAC VAC I VAC II VBOR
	01	B03A B03B B03C
	04	E36A E36B
	05	F04Z F13A F13B
	06	G12A G16A G33Z G38A G38B G38C
	07	H33Z
	08	I02A I02B I02C I03A I03B I12A I12B I12C I13A I13B I13C I13D I20A I20B I20C I20D I20G
	21B	X04Z
	Prä	B61B B61C B61D
81.14↔		BORP EML MBOR VAC VAC I VAC II VBOR
	01	B03A B03B B03C
	04	E36A E36B
	05	F04Z F13A F13B
	06	G12A G16A G38A

CHOP	MDC	DRG
		G38B
	08	I02A I02B I02C I12A I12B I12C I20A I20B I20C I20D I20G
	21B	X04Z
	Prä	B61B B61C B61D
81.15↔		BORP EML MBOR VAC VAC I VAC II VBOR
	01	B03A B03B B03C
	04	E36A E36B
	05	F04Z F13A F13B
	06	G12A G16A G38A G38B
	08	I02A I02B I02C I12A I12B I12C I20A I20B I20C I20D I20G
	21B	X04Z
	Prä	B61B B61C B61D
81.16↔		BORP EML MBOR VAC VAC I VAC II VBOR
	04	E36A E36B
	06	G12A G16A G38A G38B
	08	I02A I02B I02C I12A I12B I12C I20A I20B I20C I20D I20E I20F I20G
	21B	X04Z
	Prä	B61B B61C B61D
81.17↔		BORP EML MBOR VAC VAC I VAC II VBOR
	04	E36A E36B
	06	G12A G16A G38A G38B
	08	I02A I02B I02C I12A I12B I12C I20A I20B I20C I20D I20E I20F I20G
	21B	X04Z
	Prä	B61B B61C B61D
81.18↔		BORP EML MBOR VAC VAC I VAC II VBOR
	04	E36A E36B
	06	G12A G16A G38A G38B
	08	I02A I02B I02C I12A I12B I12C I20A I20B I20C I20D I20E I20F I20G
	21B	X04Z
	Prä	B61B B61C B61D
81.21↔		BORP EML MBOR VAC VAC I VAC II VBOR
	01	B03A B03B B03C
	04	E36A E36B
	06	G12A G16A G38A G38B
	08	I02A I02B I02C I03A I03B I08A I08B I08C

CHOP	MDC	DRG
	21B	X04Z
	Prä	A95A A95B
81.22↔		BORP EML MBOR VAC VAC I VAC II VBOR
	01	B03A B03B B03C
	04	E36A E36B
	06	G12A G16A G33Z G38A G38B G38C
	07	H33Z
	08	I02A I02B I02C I03A I03B I04A I04B I04C I12A I12B I12C
	11	L33Z
	21B	X04Z X07A X07B
	Prä	A95A A95B B61B B61C B61D
81.23↔		BORP EML MBOR VAC VAC I VAC II VBOR
	04	E36A E36B
	06	G12A G16A G38A G38B
	08	I02A I02B I02C I12A I12B I12C I29A I29B
	21B	X06A X06B X06C
	Prä	B61B B61C B61D
81.24↔		BORP EML MBOR VAC VAC I VAC II VBOR
	01	B03A B03B B03C
	04	E36A E36B
	06	G12A G16A G38A G38B
	08	I02A I02B I02C I12A I12B I12C I31A I31B
	21B	X06A X06B X06C
	Prä	B61B B61C B61D
81.25.09↔		BORP EML MBOR VAC VAC I VAC II VBOR
	01	B17A B17B
	04	E36A E36B
	06	G12A G16A G38A G38B
	08	I02A I02B I02C I12A I12B I12C I32A I32B I32C I32D I32E I32F
	21B	X05Z
	Prä	B61B B61C B61D
81.25.11↔		BORP EML MBOR VAC VAC I VAC II VBOR
	01	B17A B17B
	04	E36A E36B
	06	G12A G16A G38A G38B
	08	I02A I02B I02C I12A I12B I12C I32A I32B I32C I32D I32E I32F
	21B	X05Z
	Prä	B61B B61C B61D
81.25.21↔		BORP EML MBOR VAC VAC I VAC II VBOR

CHOP	MDC	DRG
	01	B17A B17B
	04	E36A E36B
	06	G12A G16A G38A G38B
	08	I02A I02B I02C I12A I12B I12C I32A I32B I32C I32D I32E I32F
	21B	X05Z
	Prä	B61B B61C B61D
81.26.09↔		BORP EML MBOR VAC VAC I VAC II VBOR
	01	B03A B03B B03C
	04	E36A E36B
	06	G12A G16A G38A G38B
	08	I02A I02B I02C I12A I12B I12C I32A I32B I32C I32D I32E I32F
	21B	X05Z
	Prä	B61B B61C B61D
81.26.11↔		BORP EML MBOR VAC VAC I VAC II VBOR
	01	B03A B03B B03C
	04	E36A E36B
	06	G12A G16A G38A G38B
	08	I02A I02B I02C I12A I12B I12C I32A I32B I32C I32D I32E I32F
	21B	X05Z
	Prä	B61B B61C B61D
81.27↔		BORP EML MBOR VAC VAC I VAC II VBOR
	01	B03A B03B B03C
	04	E36A E36B
	06	G12A G16A G38A G38B
	08	I02A I02B I02C I12A I12B I12C I32A I32B I32C I32D I32E I32F
	21B	X05Z
	Prä	B61B B61C B61D
81.28↔		BORP EML MBOR VAC VAC I VAC II VBOR
	01	B03A B03B B03C
	04	E36A E36B
	06	G12A G16A G38A G38B
	08	I02A I02B I02C I20A I20B I20C I20D I20E I20F I20G I32A I32B I32C I32D I32E I32F
	21B	X05Z
81.29.10↔		BORP MBOR VAC VAC I VAC II VBOR
	04	E36A E36B
	06	G12A G16A G38A G38B
	08	I02A I02B I02C I08A I08B I08C

PROC

PROC

CHOP	MDC	DRG
	21B	X04Z X06A X06B X06C
81.29.20↔		BORP MBOR VAC VAC I VAC II VBOR
	04	E36A E36B
	06	G12A G16A G38A G38B
	08	I02A I02B I02C I08A I08B I08C
	21B	X04Z X06A X06B X06C
81.29.99↔		BORP MBOR VAC VBOR
	04	E36A E36B
	06	G12A G16A G38A G38B
	08	I28A I28B I28C
81.40.00↔		BORP EML MBOR VAC VAC I VAC II VBOR
	01	B03A B03B B03C
	04	E36A E36B
	06	G12A G16A G38A G38B
	08	I02A I02B I02C I08A I08B I08C I12A I12B I12C
	21B	X04Z X06A X06B X06C
	Prä	B61B B61C B61D
81.40.10↔		BORP EML MBOR VAC VAC I VAC II VBOR
	01	B03A B03B B03C
	04	E36A E36B
	06	G12A G16A G38A G38B
	08	I02A I02B I02C I12A I12B I12C I21A
	21B	X04Z X06A X06B X06C
	Prä	B61B B61C B61D
81.40.11↔		BORP EML MBOR VAC VAC I VAC II VBOR
	01	B03A B03B B03C
	04	E36A E36B
	06	G12A G16A G38A G38B
	08	I02A I02B I02C I12A I12B I12C I21A
	21B	X04Z X06A X06B X06C
	Prä	B61B B61C B61D
81.40.16↔	08	I21A I21B
81.40.17↔	08	I21A I21B
81.40.18↔		BORP EML MBOR VAC VAC I VAC II VBOR
	01	B03A B03B B03C
	04	E36A E36B
	06	G12A G16A G38A G38B
	08	I02A I02B I02C I08A I08B I08C I12A I12B I12C
	21B	X04Z X06A X06B X06C
	Prä	B61B B61C B61D
81.40.19↔		BORP EML MBOR VAC VAC I VAC II VBOR
	01	B03A B03B B03C
	04	E36A E36B
	06	G12A G16A G38A G38B
	08	I02A I02B I02C I08A I08B I08C I12A I12B I12C
	21B	X04Z X06A X06B X06C
	Prä	B61B B61C B61D
81.40.20↔		BORP EML MBOR VAC VAC I VAC II VBOR
	01	B03A B03B B03C
	04	E36A E36B
	06	G12A G16A G38A G38B
	08	I02A I02B I02C I08A I08B I08C I12A I12B I12C I21A I21B
	21B	X04Z X06A X06B X06C
	Prä	B61B B61C B61D
81.40.21↔		BORP EML MBOR VAC VAC I VAC II VBOR
	01	B03A B03B B03C
	04	E36A E36B
	06	G12A G16A G38A G38B
	08	I02A I02B I02C I08A I08B I08C I12A I12B I12C I21A I21B
	21B	X04Z X06A X06B X06C
	Prä	B61B B61C B61D
81.40.30↔		BORP EML MBOR VAC VAC I VAC II VBOR
	01	B03A B03B B03C
	04	E36A E36B
	06	G12A G16A G38A G38B
	08	I02A I02B I02C I08A I08B I08C I12A I12B I12C
	21B	X04Z X06A X06B X06C
	Prä	B61B B61C B61D
81.40.31↔		BORP EML MBOR VAC VAC I VAC II VBOR
	01	B03A B03B B03C
	04	E36A E36B
	06	G12A G16A G38A G38B
	08	I02A I02B I02C I08A I08B I12A I12B I12C
	21B	X04Z X06A X06B X06C
	Prä	B61B B61C B61D
81.40.32↔		BORP EML MBOR VAC VAC I VAC II VBOR
	01	B03A B03B B03C
	04	E36A E36B
	06	G12A G16A G38A G38B
	08	I02A I02B I02C I08A I08B I08C I12A I12B I12C
	21B	X04Z X06A X06B X06C
	Prä	B61B B61C B61D
81.40.33↔		BORP EML MBOR VAC VAC I VAC II VBOR
	01	B03A B03B B03C
	04	E36A E36B
	06	G12A G16A G38A G38B
	08	I02A I02B I02C I08A I08B I08C I12A I12B I12C
	21B	X04Z X06A X06B X06C
	Prä	B61B B61C B61D
81.40.34↔		BORP EML MBOR VAC VAC I VAC II VBOR
	01	B03A B03B B03C
	04	E36A E36B
	06	G12A G16A G38A G38B
	08	I02A I02B I02C I08A I08B I08C I12A I12B I12C
	21B	X04Z X06A X06B X06C
	Prä	B61B B61C B61D
81.40.35↔		BORP EML MBOR VAC VAC I VAC II VBOR
	01	B03A B03B B03C
	04	E36A E36B
	06	G12A G16A G38A G38B
	08	I02A I02B I02C I08A I08B I08C I12A I12B I12C
	21B	X04Z X06A X06B X06C
	Prä	B61B B61C B61D
81.40.99↔		BORP EML MBOR VAC VAC I VAC II VBOR
	01	B03A B03B B03C
	04	E36A E36B
	06	G12A G16A G38A G38B
	08	I02A I02B I02C I08A I08B I08C I12A I12B I12C
	21B	X04Z X06A X06B X06C
	Prä	B61B B61C B61D
81.42↔		BORP EML MBOR VAC VAC I VAC II VBOR
	01	B03A B03B B03C
	04	E36A E36B
	06	G12A G16A G38A G38B

CHOP	MDC	DRG
	08	I30A I30B I30C
	21B	X04Z
81.43↔		BORP EML MBOR VAC VAC I VAC II VBOR
	01	B03A B03B B03C
	04	E36A E36B
	06	G12A G16A G38A G38B
	08	I30A I30B I30C
	21B	X04Z
81.44.10↔		BORP EML MBOR VAC VAC I VAC II VBOR
	01	B03A B03B B03C B17A B17B
	04	E36A E36B
	05	F04Z F13A F13B F13C
	06	G12A G16A G38A G38B
	08	I30A I30B I30C
	10	K09A K09B
	21B	X04Z
81.44.11↔		BORP EML MBOR VAC VAC I VAC II VBOR
	01	B03A B03B B03C B17A B17B
	04	E36A E36B
	05	F04Z F13A F13B F13C
	06	G12A G16A G38A G38B
	08	I30A I30B I30C
	10	K09A K09B
	21B	X04Z
81.44.12↔		BORP EML MBOR VAC VAC I VAC II VBOR
	01	B03A B03B B03C B17A B17B
	04	E36A E36B
	05	F04Z F13A F13B F13C
	06	G12A G16A G38A G38B
	08	I30A I30B I30C
	10	K09A K09B
	21B	X04Z
81.44.13↔		BORP EML MBOR VAC VAC I VAC II VBOR
	01	B03A B03B B03C B17A B17B
	04	E36A E36B
	05	F04Z F13A F13B F13C
	06	G12A G16A G38A G38B
	08	I30A I30B I30C
	10	K09A K09B
	21B	X04Z
81.44.14↔		BORP EML MBOR VAC VAC I VAC II VBOR
	01	B03A B03B B03C B17A B17B
	04	E36A E36B
	05	F04Z F13A F13B F13C
	06	G12A G16A G38A G38B
	08	I30A I30B I30C
	10	K09A K09B
	21B	X04Z
81.44.99↔		BORP EML MBOR VAC VAC I VAC II VBOR
	01	B03A B03B B03C B17A B17B
	04	E36A E36B
	05	F04Z F13A F13B F13C
	06	G12A G16A G38A G38B
	08	I30A I30B I30C
	10	K09A K09B
	21B	X04Z
81.45.10↔		BORP EML MBOR VAC VAC I VAC II VBOR
	01	B17A B17B
	04	E36A E36B
	06	G12A G16A G38A G38B
	08	I30A I30B I30C
	10	K09A K09B
	21B	X04Z
81.45.11↔		BORP EML MBOR VAC VAC I VAC II VBOR
	01	B17A B17B
	04	E36A E36B
	06	G12A G16A G38A G38B
	08	I30A I30B I30C
	10	K09A K09B
	21B	X04Z
81.45.12↔		BORP EML MBOR VAC VAC I VAC II VBOR
	01	B17A B17B
	04	E36A E36B
	06	G12A G16A G38A G38B
	08	I30A I30B I30C
	10	K09A K09B
	21B	X04Z
81.45.13↔		BORP EML MBOR VAC VAC I VAC II VBOR
	01	B17A B17B
	04	E36A E36B
	06	G12A G16A G38A G38B
	08	I30A I30B I30C
	10	K09A K09B
	21B	X04Z
81.45.14↔		BORP EML MBOR VAC VAC I VAC II VBOR
	01	B17A B17B
	04	E36A E36B
	06	G12A G16A G38A G38B
	08	I30A I30B I30C
	10	K09A K09B
	21B	X04Z
81.45.19↔		BORP EML MBOR VAC VAC I VAC II VBOR
	01	B17A B17B
	04	E36A E36B
	06	G12A G16A G38A G38B
	08	I30A I30B I30C
	10	K09A K09B
	21B	X04Z
81.45.20↔		BORP EML MBOR VAC VAC I VAC II VBOR
	01	B17A B17B
	04	E36A E36B
	06	G12A G16A G38A G38B
	08	I30A I30B I30C
	10	K09A K09B
	21B	X04Z
81.45.21↔		BORP EML MBOR VAC VAC I VAC II VBOR
	01	B17A B17B
	04	E36A E36B
	06	G12A G16A G38A G38B
	08	I30A I30B I30C
	10	K09A K09B
	21B	X04Z
81.45.22↔		BORP EML MBOR VAC VAC I VAC II VBOR
	01	B17A B17B
	04	E36A E36B
	06	G12A G16A G38A G38B
	08	I30A I30B I30C
	10	K09A K09B
	21B	X04Z
81.45.23↔		BORP EML MBOR VAC VAC I VAC II VBOR
	01	B17A B17B
	04	E36A E36B
	06	G12A G16A G38A G38B
	08	I30A I30B I30C
	10	K09A K09B
	21B	X04Z
81.45.24↔		BORP EML MBOR VAC VAC I VAC II VBOR
	01	B17A B17B
	04	E36A E36B
	06	G12A G16A G38A G38B
	08	I30A I30B I30C
	10	K09A K09B
	21B	X04Z
81.45.29↔		BORP EML MBOR VAC VAC I VAC II VBOR
	01	B17A B17B
	04	E36A E36B
	06	G12A G16A G38A G38B
	08	I30A I30B I30C
	10	K09A K09B
	21B	X04Z
81.45.99↔		BORP EML MBOR

PROC

CHOP	MDC	DRG
		VAC VAC I VAC II VBOR
	01	B17A B17B
	04	E36A E36B
	06	G12A G16A G38A G38B
	08	I30A I30B I30C
	10	K09A K09B
	21B	X04Z
81.46↔		BORP EML MBOR VAC VAC I VAC II VBOR
	01	B03A B03B B03C
	04	E36A E36B
	06	G12A G16A G38A G38B
	08	I18A I18B I18C
	21B	X04Z
81.47.10↔		BORP EML MBOR VAC VAC I VAC II VBOR
	01	B03A B03B B03C
	04	E36A E36B
	06	G12A G16A G38A G38B
	08	I18A I18B I18C I30A I30B I30C
	21B	X04Z
81.47.11↔		BORP EML MBOR VAC VAC I VAC II VBOR
	01	B03A B03B B03C
	04	E36A E36B
	06	G12A G16A G38A G38B
	08	I18A I18B I18C I30A I30B I30C
	21B	X04Z
81.47.12↔	08	I18A I18B I18C I30A I30B I30C
	21B	X04Z
81.47.13↔	08	I18A I18B I18C I30A I30B I30C
	21B	X04Z
81.47.14↔		BORP EML MBOR VAC VAC I VAC II VBOR
	01	B03A B03B B03C
	04	E36A E36B
	06	G12A G16A G38A G38B
	08	I18A I18C I30A I30B I30C
	21B	X04Z
81.47.15↔		BORP EML MBOR VAC VAC I VAC II VBOR
	01	B03A B03B B03C
	04	E36A E36B
	06	G12A G16A G38A G38B
	08	I18A I18C I30A I30B I30C
	21B	X04Z
81.47.16↔		BORP EML MBOR VAC VAC I VAC II VBOR
	01	B03A B03B B03C
	04	E36A E36B
	06	G12A G16A G38A G38B
	08	I08B I30A
	21B	X04Z
81.47.19↔		BORP EML MBOR VAC VAC I VAC II VBOR
	01	B03A B03B B03C
	04	E36A E36B
	06	G12A G16A G38A G38B
	08	I18A I18B I18C I30A I30B I30C
	21B	X04Z
81.47.20↔		BORP EML MBOR VAC VAC I VAC II VBOR
	01	B03A B03B B03C
	04	E36A E36B
	06	G12A G16A G38A G38B
	08	I18A I18B I18C I30A I30B I30C
	21B	X04Z
81.47.21↔	08	I18A I18B I18C
	21B	X04Z
81.47.22↔	08	I18A I18B I18C
	21B	X04Z
81.47.23↔		BORP EML MBOR VAC VAC I VAC II VBOR
	01	B03A B03B B03C
	04	E36A E36B
	06	G12A G16A G38A G38B
	08	I18A I18B I18C I30A I30B I30C
	21B	X04Z
81.47.24↔		BORP EML MBOR VAC VAC I VAC II VBOR
	01	B03A B03B B03C
	04	E36A E36B
	06	G12A G16A G38A G38B
	08	I18A I18B I18C I30A I30B I30C
	21B	X04Z
81.47.25↔		BORP EML MBOR VAC VAC I VAC II VBOR
	01	B03A B03B B03C
	04	E36A E36B
	06	G12A G16A G38A G38B
	08	I18A I18C I30A I30B I30C
	21B	X04Z
81.47.26↔	01	B03A B03B B03C
	08	I18A I18B I18C
	21B	X04Z
81.47.27↔		BORP EML MBOR VAC VAC I VAC II VBOR
	01	B03A B03B B03C
	04	E36A E36B
	06	G12A G16A G38A G38B
	08	I18A I18B I18C I30A I30B I30C
	21B	X04Z
81.47.28↔		BORP EML MBOR VAC VAC I VAC II VBOR
	01	B03A B03B B03C
	04	E36A E36B
	06	G12A G16A G38A G38B
	08	I18A I18C I30A I30B I30C
	21B	X04Z
81.47.2A↔	01	B03A B03B B03C
	08	I18A I18B I18C
	21B	X04Z
81.47.30↔		BORP EML MBOR VAC VAC I VAC II VBOR
	01	B03A B03B B03C
	04	E36A E36B
	06	G12A G16A G38A G38B
	08	I18A I18B I18C I30A I30B I30C
	21B	X04Z
81.47.31↔		BORP EML MBOR VAC VAC I VAC II VBOR
	01	B03A B03B B03C
	04	E36A E36B
	06	G12A G16A G38A G38B
	08	I18A I18B I18C I30A I30B I30C
	21B	X04Z
81.47.40↔		BORP EML MBOR VAC VAC I VAC II VBOR
	01	B03A B03B B03C
	04	E36A E36B
	06	G12A G16A G38A G38B
	08	I18A I18B I18C I30A I30B I30C
	21B	X04Z
81.47.60↔		BORP EML MBOR VAC VAC I VAC II VBOR
	01	B03A B03B B03C
	04	E36A E36B
	06	G12A G16A G38A G38B
	08	I30A I30B I30C
	21B	X04Z
81.47.90↔		BORP EML MBOR VAC VAC I VAC II VBOR
	01	B03A B03B B03C
	04	E36A E36B
	06	G12A G16A G38A G38B
	08	I18A I18B I18C
	21B	X04Z
81.47.99↔		BORP EML MBOR VAC VAC I VAC II VBOR
	01	B03A B03B B03C
	04	E36A E36B
	06	G12A G16A G38A G38B
	08	I18A I18B I18C
	21B	X04Z

CHOP	MDC	DRG
81.49.10↔		BORP EML MBOR VAC VAC I VAC II VBOR
	01	B03A B03B B03C
	04	E36A E36B
	05	F04Z F13A F13B F13C
	06	G12A G16A G38A G38B
	08	I02A I02B I02C I12A I12B I12C I59Z
	21B	X04Z
	Prä	B61B B61C B61D
81.49.11↔		BORP EML MBOR VAC VAC I VAC II VBOR
	01	B03A B03B B03C
	04	E36A E36B
	05	F04Z F13A F13B F13C
	06	G12A G16A G38A G38B
	08	I02A I02B I02C I12A I12B I12C I59Z
	21B	X04Z
	Prä	B61B B61C B61D
81.49.12↔		BORP EML MBOR VAC VAC I VAC II VBOR
	01	B03A B03B B03C
	04	E36A E36B
	05	F04Z F13A F13B F13C
	06	G12A G16A G38A G38B
	08	I02A I02B I02C I12A I12B I12C I59Z
	21B	X04Z
	Prä	B61B B61C B61D
81.49.13↔		BORP EML MBOR VAC VAC I VAC II VBOR
	01	B03A B03B B03C
	04	E36A E36B
	05	F04Z F13A F13B F13C
	06	G12A G16A G38A G38B
	08	I02A I02B I02C I12A I12B I12C I59Z
	21B	X04Z
	Prä	B61B B61C B61D
81.49.26↔		BORP EML MBOR VAC VAC I VAC II VBOR
	01	B03A B03B B03C
	04	E36A E36B
	05	F04Z F13A F13B F13C
	06	G12A G16A G38A G38B
	08	I02A I02B I02C I12A I12B I12C I59Z
	21B	X04Z
	Prä	B61B B61C B61D
81.49.27↔		BORP EML MBOR VAC VAC I VAC II VBOR
	01	B03A B03B B03C
	04	E36A E36B
	05	F04Z F13A F13B F13C
	06	G12A G16A G38A G38B
	08	I02A I02B I02C I12A I12B I12C I59Z
	21B	X04Z
	Prä	B61B B61C B61D
81.49.28↔		BORP EML MBOR VAC VAC I VAC II VBOR
	01	B03A B03B B03C
	04	E36A E36B
	05	F04Z F13A F13B F13C
	06	G12A G16A G38A G38B
	08	I02A I02B I02C I12A I12B I12C I59Z
	21B	X04Z
	Prä	B61B B61C B61D
81.49.29↔		BORP EML MBOR VAC VAC I VAC II VBOR
	01	B03A B03B B03C
	04	E36A E36B
	05	F04Z F13A F13B F13C
	06	G12A G16A G38A G38B
	08	I02A I02B I02C I12A I12B I12C I59Z
	21B	X04Z
	Prä	B61B B61C B61D
81.49.30↔		BORP EML MBOR VAC VAC I VAC II VBOR
	01	B03A B03B B03C
	04	E36A E36B
	05	F04Z F13A F13B F13C
	06	G12A G16A G38A G38B
	08	I02A I02B I02C I12A I12B I12C I20A I20B I20C I20D I20G
	21B	X04Z
	Prä	B61B B61C B61D
81.49.31↔		BORP EML MBOR VAC VAC I VAC II VBOR
	01	B03A B03B B03C
	04	E36A E36B
	05	F04Z F13A F13B F13C
	06	G12A G16A G38A G38B
	08	I02A I02B I02C I12A I12B I12C I20A I20B I20C I20D I20G
	21B	X04Z
	Prä	B61B B61C B61D
81.49.32↔		BORP EML MBOR VAC VAC I VAC II VBOR
	01	B03A B03B B03C
	04	E36A E36B
	05	F04Z F13A F13B F13C
	06	G12A G16A G38A G38B
	08	I02A I02B I02C I12A I12B I12C I59Z
	21B	X04Z
	Prä	B61B B61C B61D
81.49.33↔		BORP EML MBOR VAC VAC I VAC II VBOR
	01	B03A B03B B03C
	04	E36A E36B
	05	F04Z F13A F13B F13C
	06	G12A G16A G38A G38B
	08	I02A I02B I02C I12A I12B I12C I59Z
	21B	X04Z
	Prä	B61B B61C B61D
81.49.34↔		BORP EML MBOR VAC VAC I VAC II VBOR
	01	B03A B03B B03C
	04	E36A E36B
	05	F04Z F13A F13B F13C
	06	G12A G16A G38A G38B
	08	I02A I02B I02C I12A I12B I12C I20A I20B I20C I20D I20G
	21B	X04Z
	Prä	B61B B61C B61D
81.49.35↔		BORP EML MBOR VAC VAC I VAC II VBOR
	01	B03A B03B B03C
	04	E36A E36B
	05	F04Z F13A F13B F13C
	06	G12A G16A G38A G38B
	08	I02A I02B I02C I12A I12B I12C I20A I20B I20C I20D I20G
	21B	X04Z
	Prä	B61B B61C B61D
81.49.99↔		BORP EML MBOR VAC VAC I VAC II VBOR
	01	B03A B03B B03C
	04	E36A E36B
	05	F04Z F13A F13B F13C
	06	G12A G16A G38A G38B
	08	I02A I02B I02C

PROC

CHOP	MDC	DRG
		I12A I12B I12C
		I59Z
	21B	X04Z
	Prä	B61B B61C B61D
81.51.00↔		BORP EML MBOR
		VAC VAC I VAC II
		VBOR
	04	E36A E36B
	06	G12A G16A G33Z
		G38A G38B G38C
	07	H33Z
	08	I02A I02B I02C
		I03A I03B I12A
		I12B I12C I36Z
		I46A I46B I46C
	11	L33Z
	21B	X04Z X07A X07B
	Prä	A95A A95B B61B
		B61C B61D
81.51.11↔		BORP EML MBOR
		VAC VAC I VAC II
		VBOR
	04	E36A E36B
	06	G12A G16A G33Z
		G38A G38B G38C
	07	H33Z
	08	I02A I02B I02C
		I03A I03B I12A
		I12B I12C I36Z
		I46A I46B I46C
	11	L33Z
	21B	X04Z X07A X07B
	Prä	A95A A95B B61B
		B61C B61D
81.51.12↔		BORP EML MBOR
		VAC VAC I VAC II
		VBOR
	04	E36A E36B
	06	G12A G16A G33Z
		G38A G38B G38C
	07	H33Z
	08	I02A I02B I02C
		I03A I03B I12A
		I12B I12C I36Z
		I46A I46B I46C
	11	L33Z
	21B	X04Z X07A X07B
	Prä	A95A A95B B61B
		B61C B61D
81.51.13↔		BORP EML MBOR
		VAC VAC I VAC II
		VBOR
	04	E36A E36B
	05	F04Z F13A F13B
	06	G12A G16A G33Z
		G38A G38B G38C
	07	H33Z
	08	I02A I02B I02C
		I03A I03B I12A
		I12B I12C I46A
		I46B I46C
	11	L33Z
	21B	X04Z X07A X07B
	Prä	A95A A95B B61B
		B61C B61D
81.51.19↔		BORP EML MBOR
		VAC VAC I VAC II
		VBOR
	04	E36A E36B
	06	G12A G16A G33Z
		G38A G38B G38C
	07	H33Z
	08	I02A I02B I02C
		I03A I03B I12A
		I12B I12C I36Z
		I46A I46B I46C
	11	L33Z
	21B	X04Z X07A X07B
	Prä	A95A A95B B61B
		B61C B61D
81.51.21↔		BORP EML KORP
		MBOR MKOR VAC
		VAC I VAC II VBOR
		VKOR
	04	E36A E36B
	05	F04Z F13A F13B
	06	G12A G16A G33Z
		G38A G38B G38C
	07	H33Z
	08	I02A I02B I02C
		I03A I03B I12A
		I12B I12C I46A
		I46B I46C
	10	K09A K09B
	11	L33Z
	21B	X04Z X07A X07B
	Prä	A95A A95B B61B
		B61C B61D
81.51.22↔		BORP EML KORP
		MBOR MKOR VAC
		VAC I VAC II VBOR
		VKOR
	04	E36A E36B
	05	F04Z F13A F13B
	06	G12A G16A G33Z
		G38A G38B G38C
	07	H33Z
	08	I02A I02B I02C
		I03A I03B I12A
		I12B I12C I46A
		I46B I46C
	10	K09A K09B
	11	L33Z
	21B	X04Z X07A X07B
	Prä	A95A A95B B61B
		B61C B61D
81.51.23↔		BORP EML MBOR
		VAC VAC I VAC II
		VBOR
	04	E36A E36B
	05	F04Z F13A F13B
	06	G12A G16A G33Z
		G38A G38B G38C
	07	H33Z
	08	I46A I46B I46C
	10	K09A K09B
	11	L33Z
	21B	X04Z X07A X07B
	Prä	B61B B61C
81.51.29↔		BORP EML KORP
		MBOR MKOR VAC
		VAC I VAC II VBOR
		VKOR
	04	E36A E36B
	05	F04Z F13A F13B
	06	G12A G16A G33Z
		G38A G38B G38C
	07	H33Z
	08	I02A I02B I02C
		I03A I03B I12A
		I12B I12C I46A
		I46B I46C
	10	K09A K09B
	11	L33Z
	21B	X04Z X07A X07B
	Prä	A95A A95B B61B
		B61C B61D
81.52.21↔		BORP EML MBOR
		VAC VAC I VAC II
		VBOR
	04	E36A E36B
	06	G12A G16A G33Z
		G38A G38B G38C
	07	H33Z
	08	I02A I02B I02C
		I03A I03B I12A
		I12B I12C I36Z
		I46A I46B I46C
	10	K09A K09B
	11	L33Z
	21B	X04Z X07A X07B
	Prä	A95A A95B B61B
		B61C B61D
81.52.22↔		BORP EML MBOR
		VAC VAC I VAC II
		VBOR
	04	E36A E36B
	06	G12A G16A G33Z
		G38A G38B G38C
	07	H33Z
	08	I02A I02B I02C
		I03A I03B I12A
		I12B I12C I36Z
		I46A I46B I46C
	10	K09A K09B
	11	L33Z
	21B	X04Z X07A X07B
	Prä	A95A A95B B61B
		B61C B61D
81.52.29↔		BORP EML MBOR
		VAC VAC I VAC II
		VBOR
	04	E36A E36B
	06	G12A G16A G33Z
		G38A G38B G38C
	07	H33Z
	08	I02A I02B I02C
		I03A I03B I12A
		I12B I12C I36Z
		I46A I46B I46C
	10	K09A K09B
	11	L33Z
	21B	X04Z X07A X07B
	Prä	A95A A95B B61B
		B61C B61D
81.52.31↔		BORP EML MBOR
		VAC VAC I VAC II
		VBOR
	04	E36A E36B
	06	G12A G16A G33Z
		G38A G38B G38C
	07	H33Z
	08	I02A I02B I02C
		I03A I03B I12A
		I12B I12C I36Z
		I46A I46B I46C
	10	K09A K09B
	11	L33Z
	21B	X04Z X07A X07B
	Prä	A95A A95B B61B

CHOP	MDC	DRG
		B61C B61D
81.52.39↔		BORP EML MBOR VAC VAC I VAC II VBOR
	04	E36A E36B
	06	G12A G16A G33Z G38A G38B G38C
	07	H33Z
	08	I02A I02B I02C I03A I03B I12A I12B I12C I36Z I46A I46B I46C
	10	K09A K09B
	11	L33Z
	21B	X04Z X07A X07B
	Prä	A95A A95B B61B B61C B61D
81.52.41↔		BORP EML MBOR VAC VAC I VAC II VBOR
	04	E36A E36B
	05	F04Z F13A F13B
	06	G12A G16A G33Z G38A G38B G38C
	07	H33Z
	08	I02A I02B I02C I03A I03B I12A I12B I12C I46A I46B I46C
	10	K09A K09B
	11	L33Z
	21B	X04Z X07A X07B
	Prä	A95A A95B B61B B61C B61D
81.52.42↔		BORP EML MBOR VAC VAC I VAC II VBOR
	04	E36A E36B
	05	F04Z F13A F13B
	06	G12A G16A G33Z G38A G38B G38C
	07	H33Z
	08	I02A I02B I02C I03A I03B I12A I12B I12C I46A I46B I46C
	10	K09A K09B
	11	L33Z
	21B	X04Z X07A X07B
	Prä	A95A A95B B61B B61C B61D
81.52.49↔		BORP EML MBOR VAC VAC I VAC II VBOR
	04	E36A E36B
	05	F04Z F13A F13B
	06	G12A G16A G33Z G38A G38B G38C
	07	H33Z
	08	I46A I46B I46C
	10	K09A K09B
	11	L33Z
	21B	X04Z X07A X07B
	Prä	B61B B61C
81.52.51↔		BORP EML KORP MBOR MKOR VAC VAC I VAC II VBOR VKOR
	04	E36A E36B
	05	F04Z F13A F13B
	06	G12A G16A G33Z G38A G38B G38C
	07	H33Z
	08	I02A I02B I02C I03A I03B I12A I12B I12C I46A I46B I46C
	10	K09A K09B
	11	L33Z
	21B	X04Z X07A X07B
	Prä	A95A A95B B61B B61C B61D
81.52.52↔		BORP EML KORP MBOR MKOR VAC VAC I VAC II VBOR VKOR
	04	E36A E36B
	05	F04Z F13A F13B
	06	G12A G16A G33Z G38A G38B G38C
	07	H33Z
	08	I46A I46B I46C
	10	K09A K09B
	11	L33Z
	21B	X04Z X07A X07B
	Prä	B61B B61C
81.52.53↔		BORP EML KORP MBOR MKOR VAC VAC I VAC II VBOR VKOR
	04	E36A E36B
	05	F04Z F13A F13B
	06	G12A G16A G33Z G38A G38B G38C
	07	H33Z
	08	I46A I46B I46C
	10	K09A K09B
	11	L33Z
	21B	X04Z X07A X07B
	Prä	B61B B61C
81.52.54↔		BORP EML KORP MBOR MKOR VAC VAC I VAC II VBOR VKOR
	04	E36A E36B
	05	F04Z F13A F13B
	06	G12A G16A G33Z G38A G38B G38C
	07	H33Z
	08	I46A I46B I46C
	10	K09A K09B
	11	L33Z
	21B	X04Z X07A X07B
	Prä	B61B B61C
81.52.55↔		BORP EML KORP MBOR MKOR VAC VAC I VAC II VBOR VKOR
	04	E36A E36B
	05	F04Z F13A F13B
	06	G12A G16A G33Z G38A G38B G38C
	07	H33Z
	08	I02A I02B I02C I03A I03B I12A I12B I12C I46A I46B I46C
	10	K09A K09B
	11	L33Z
	21B	X04Z X07A X07B
	Prä	A95A A95B B61B B61C B61D
81.52.56↔		BORP EML KORP MBOR MKOR VAC VAC I VAC II VBOR VKOR
	04	E36A E36B
	05	F04Z F13A F13B
	06	G12A G16A G33Z G38A G38B G38C
	07	H33Z
	08	I02A I02B I02C I03A I03B I12A I12B I12C I46A I46B I46C
	10	K09A K09B
	11	L33Z
	21B	X04Z X07A X07B
	Prä	A95A A95B B61B B61C B61D
81.52.57↔		BORP EML KORP MBOR MKOR VAC VAC I VAC II VBOR VKOR
	04	E36A E36B
	05	F04Z F13A F13B
	06	G12A G16A G33Z G38A G38B G38C
	07	H33Z
	08	I02A I02B I02C I03A I03B I12A I12B I12C I46A I46B I46C
	10	K09A K09B
	11	L33Z
	21B	X04Z X07A X07B
	Prä	A95A A95B B61B B61C B61D
81.52.58↔		BORP EML KORP MBOR MKOR VAC VAC I VAC II VBOR VKOR
	04	E36A E36B
	05	F04Z F13A F13B
	06	G12A G16A G33Z G38A G38B G38C
	07	H33Z
	08	I02A I02B I02C I03A I03B I12A I12B I12C I46A I46B I46C
	10	K09A K09B
	11	L33Z
	21B	X04Z X07A X07B
	Prä	A95A A95B B61B B61C B61D
81.52.59↔		BORP EML KORP MBOR MKOR VAC VAC I VAC II VBOR VKOR
	04	E36A E36B
	05	F04Z F13A F13B
	06	G12A G16A G33Z G38A G38B G38C
	07	H33Z
	08	I46A I46B I46C
	10	K09A K09B
	11	L33Z
	21B	X04Z X07A X07B
	Prä	B61B B61C
81.52.5A↔		BORP EML KORP MBOR MKOR VAC

PROC

PROC

CHOP	MDC	DRG
		VAC I VAC II VBOR VKOR
	04	E36A E36B
	05	F04Z F13A F13B
	06	G12A G16A G33Z G38A G38B G38C
	07	H33Z
	08	I02A I02B I02C I03A I03B I12A I12B I12C I46A I46B I46C
	10	K09A K09B
	11	L33Z
	21B	X04Z X07A X07B
	Prä	A95A A95B B61B B61C B61D
81.52.5B↔		BORP EML KORP MBOR MKOR VAC VAC I VAC II VBOR VKOR
	04	E36A E36B
	05	F04Z F13A F13B
	06	G12A G16A G33Z G38A G38B G38C
	07	H33Z
	08	I02A I02B I02C I03A I03B I12A I12B I12C I46A I46B I46C
	10	K09A K09B
	11	L33Z
	21B	X04Z X07A X07B
	Prä	A95A A95B B61B B61C B61D
81.53↔		EML
	05	F04Z F13A F13B
	06	G33Z G38A G38B G38C
	07	H33Z
	08	I02A I02B I02C I08A I08B I08C
	10	K09A K09B
	11	L33Z
	21B	X04Z X07A X07B
81.54.00↔	08	I44A I44B
	21B	X04Z
81.54.21↔		BORP EML MBOR VAC VAC I VAC II VBOR
	04	E36A E36B
	06	G12A G16A G33Z G38A G38B G38C
	07	H33Z
	08	I02A I02B I02C I03A I03B I04A I04B I04C I12A I12B I12C I36Z I43A I43B I43C
	11	L33Z
	21B	X04Z X07A X07B
	Prä	A95A A95B B61B B61C B61D
81.54.22↔		BORP EML MBOR VAC VAC I VAC II VBOR
	04	E36A E36B
	06	G12A G16A G33Z G38A G38B G38C
	07	H33Z
	08	I02A I02B I02C I03A I03B I04A I04B I04C I12A I12B I12C I36Z I43A I43B I43C
	11	L33Z
	21B	X04Z X07A X07B
	Prä	A95A A95B B61B B61C B61D
81.54.23↔		BORP EML MBOR VAC VAC I VAC II VBOR
	04	E36A E36B
	06	G12A G16A G33Z G38A G38B G38C
	07	H33Z
	08	I02A I02B I02C I03A I03B I04A I04B I04C I12A I12B I12C I36Z I43A I43B I43C
	11	L33Z
	21B	X04Z X07A X07B
	Prä	A95A A95B B61B B61C B61D
81.54.24↔		BORP EML MBOR VAC VAC I VAC II VBOR
	04	E36A E36B
	06	G12A G16A G33Z G38A G38B G38C
	07	H33Z
	08	I02A I02B I02C I03A I03B I04A I04B I04C I12A I12B I12C I36Z I44A I44B
	11	L33Z
	21B	X04Z X07A X07B
	Prä	A95A A95B B61B B61C B61D
81.54.25↔		BORP EML MBOR VAC VAC I VAC II VBOR
	04	E36A E36B
	06	G12A G16A G33Z G38A G38B G38C
	07	H33Z
	08	I02A I02B I02C I03A I03B I04A I04B I04C I12A I12B I12C I36Z I43A I43B I43C
	11	L33Z
	21B	X04Z X07A X07B
	Prä	A95A A95B B61B B61C B61D
81.54.26↔		BORP EML MBOR VAC VAC I VAC II VBOR
	04	E36A E36B
	06	G12A G16A G33Z G38A G38B G38C
	07	H33Z
	08	I02A I02B I02C I03A I03B I04A I04B I04C I12A I12B I12C I36Z I44A I44B
	11	L33Z
	21B	X04Z X07A X07B
	Prä	A95A A95B B61B B61C B61D
81.54.27↔	Prä	A95A A95B
	08	I04A I04B I04C I44A I44B
	21B	X04Z
81.54.28↔	Prä	A95A A95B
	08	I04A I04B I04C I44A I44B
	21B	X04Z
81.54.29↔	Prä	A95A A95B
	08	I04A I04B I04C I44A I44B
	21B	X04Z
81.54.31↔		BORP EML KORP MBOR MKOR VAC VAC I VAC II VBOR VKOR
	04	E36A E36B
	05	F04Z F13A F13B
	06	G12A G16A G33Z G38A G38B G38C
	07	H33Z
	08	I02A I02B I02C I03A I03B I04A I04B I12A I12B I12C I43A I43B
	11	L33Z
	21B	X04Z X07A X07B
	Prä	A95A A95B B61B B61C B61D
81.54.32↔		BORP EML KORP MBOR MKOR VAC VAC I VAC II VBOR VKOR
	04	E36A E36B
	05	F04Z F13A F13B
	06	G12A G16A G33Z G38A G38B G38C
	07	H33Z
	08	I02A I02B I02C I03A I03B I04A I04B I12A I12B I12C I43A I43B
	11	L33Z
	21B	X04Z X07A X07B
	Prä	A95A A95B B61B B61C B61D
81.54.33↔		BORP EML KORP MBOR MKOR VAC VAC I VAC II VBOR VKOR
	04	E36A E36B
	05	F04Z F13A F13B
	06	G12A G16A G33Z G38A G38B G38C
	07	H33Z
	08	I02A I02B I02C I03A I03B I04A I04B I12A I12B I12C I43A I43B
	11	L33Z
	21B	X04Z X07A X07B
	Prä	A95A A95B B61B B61C B61D
81.54.34↔		BORP EML MBOR VAC VAC I VAC II VBOR
	04	E36A E36B
	05	F04Z F13A F13B

CHOP	MDC	DRG
	06	G12A G16A G33Z G38A G38B G38C
	07	H33Z
	08	I44A
	11	L33Z
	21B	X04Z X07A X07B
81.54.35↔		BORP EML KORP MBOR MKOR VAC VAC I VAC II VBOR VKOR
	04	E36A E36B
	05	F04Z F13A F13B
	06	G12A G16A G33Z G38A G38B G38C
	07	H33Z
	08	I02A I02B I02C I03A I03B I04A I04B I04C I12A I12B I12C I43A I43B
	11	L33Z
	21B	X04Z X07A X07B
	Prä	A95A A95B B61B B61C B61D
81.54.39↔		BORP EML MBOR VAC VAC I VAC II VBOR
	04	E36A E36B
	05	F04Z F13A F13B
	06	G12A G16A G33Z G38A G38B G38C
	07	H33Z
	08	I44A
	11	L33Z
	21B	X04Z X07A X07B
81.54.42↔		BORP EML MBOR VAC VAC I VAC II VBOR
	04	E36A E36B
	05	F04Z F13A F13B
	06	G12A G16A G33Z G38A G38B G38C
	07	H33Z
	08	I44A I44B
	11	L33Z
	21B	X04Z X07A X07B
81.54.43↔		BORP EML MBOR VAC VAC I VAC II VBOR
	04	E36A E36B
	05	F04Z F13A F13B
	06	G12A G16A G33Z G38A G38B G38C
	07	H33Z
	08	I44A I44B
	11	L33Z
	21B	X04Z X07A X07B
81.54.44↔		BORP EML MBOR VAC VAC I VAC II VBOR
	04	E36A E36B
	05	F04Z F13A F13B
	06	G12A G16A G33Z G38A G38B G38C
	07	H33Z
	08	I02A I02B I02C I03A I03B I04A I04B I04C I12A I12B I12C I44A
	11	L33Z
	21B	X04Z X07A X07B
	Prä	A95A A95B B61B B61C B61D
81.54.45↔		BORP EML KORP MBOR MKOR VAC VAC I VAC II VBOR VKOR
	04	E36A E36B
	05	F04Z F13A F13B
	06	G12A G16A G33Z G38A G38B G38C
	07	H33Z
	08	I02A I02B I02C I03A I03B I04A I04B I04C I12A I12B I12C I44A
	11	L33Z
	21B	X04Z X07A X07B
	Prä	A95A A95B B61B B61C B61D
81.54.46↔		BORP EML MBOR VAC VAC I VAC II VBOR
	04	E36A E36B
	05	F04Z F13A F13B
	06	G12A G16A G33Z G38A G38B G38C
	07	H33Z
	08	I44A I44B
	11	L33Z
	21B	X04Z X07A X07B
81.54.47↔		BORP EML MBOR VAC VAC I VAC II VBOR
	04	E36A E36B
	05	F04Z F13A F13B
	06	G12A G16A G33Z G38A G38B G38C
	07	H33Z
	08	I44A I44B
	11	L33Z
	21B	X04Z X07A X07B
81.54.49↔		BORP EML MBOR VAC VAC I VAC II VBOR
	04	E36A E36B
	05	F04Z F13A F13B
	06	G12A G16A G33Z G38A G38B G38C
	07	H33Z
	08	I44A I44B
	11	L33Z
	21B	X04Z X07A X07B
81.55↔		EML
	05	F04Z F13A F13B
	06	G33Z G38A G38B G38C
	07	H33Z
	08	I18A I18B I18C I30A I30B I30C
	11	L33Z
	21B	X04Z X07A X07B
81.56↔		BORP EML MBOR VAC VAC I VAC II VBOR
	04	E36A E36B
	06	G12A G16A G33Z G38A G38B G38C
	07	H33Z
	08	I02A I02B I02C I03A I03B I20A I20B I20C I20D I20G
	11	L33Z
	21B	X04Z X07A X07B
	Prä	A95A A95B
81.57.10↔		BORP EML MBOR VAC VAC I VAC II VBOR
	04	E36A E36B
	06	G12A G16A G38A G38B
	08	I02A I02B I02C I12A I12B I12C I20A I20B I20C I20D I20G
	21B	X04Z
	Prä	B61B B61C B61D
81.57.11↔		BORP EML MBOR VAC VAC I VAC II VBOR
	04	E36A E36B
	06	G12A G16A G38A G38B
	08	I02A I02B I02C I12A I12B I12C I20A I20B I20C I20D I20G
	21B	X04Z
	Prä	B61B B61C B61D
81.57.99↔		BORP EML MBOR VAC VAC I VAC II VBOR
	04	E36A E36B
	06	G12A G16A G38A G38B
	08	I02A I02B I02C I12A I12B I12C I20A I20B I20C I20D I20G
	21B	X04Z
	Prä	B61B B61C B61D
81.59.10↔		BORP EML MBOR VAC VAC I VAC II VBOR
	04	E36A E36B
	05	F04Z F13A F13B
	06	G12A G16A G33Z G38A G38B G38C
	07	H33Z
	08	I20A I20B I20C I20D I20E I20F I20G
	11	L33Z
	21B	X04Z X07A X07B
81.59.11↔		BORP EML MBOR VAC VAC I VAC II VBOR
	04	E36A E36B
	05	F04Z F13A F13B
	06	G12A G16A G33Z G38A G38B G38C
	07	H33Z
	08	I02A I02B I02C I03A I03B I12A I12B I12C I20A I20B I20C I20D I20G
	11	L33Z
	21B	X04Z X07A X07B

PROC

CHOP	MDC	DRG
	Prä	A95A A95B B61B B61C B61D
81.59.12↔		BORP EML MBOR VAC VAC I VAC II VBOR
	04	E36A E36B
	05	F04Z F13A F13B
	06	G12A G16A G33Z G38A G38B G38C
	07	H33Z
	08	I02A I02B I02C I03A I03B I12A I12B I12C I20A I20B I20C I20D I20E I20F I20G
	11	L33Z
	21B	X04Z X07A X07B
	Prä	A95A A95B B61B B61C B61D
81.59.13↔		BORP EML MBOR VAC VAC I VAC II VBOR
	04	E36A E36B
	05	F04Z F13A F13B
	06	G12A G16A G33Z G38A G38B G38C
	07	H33Z
	08	I02A I02B I02C I03A I03B I12A I12B I12C I20A I20B I20C I20D I20G
	11	L33Z
	21B	X04Z X07A X07B
	Prä	A95A A95B B61B B61C B61D
81.71.00↔		BORP EML MBOR VAC VAC I VAC II VBOR
	01	B17A B17B
	04	E36A E36B
	06	G12A G16A G38A G38B
	08	I02A I02B I02C I32A I32B I32C I32D I32E I32F
	21B	X05Z
81.71.10↔		BORP EML MBOR VAC VAC I VAC II VBOR
	01	B17A B17B
	04	E36A E36B
	06	G12A G16A G38A G38B
	08	I02A I02B I02C I32A I32B I32C I32E I32F
	21B	X05Z
81.71.99↔		BORP EML MBOR VAC VAC I VAC II VBOR
	01	B17A B17B
	04	E36A E36B
	06	G12A G16A G38A G38B
	08	I02A I02B I02C I32A I32B I32C I32E I32F
	21B	X05Z
81.72↔		BORP EML MBOR VAC VAC I VAC II VBOR
	01	B17A B17B
	04	E36A E36B
	06	G12A G16A G38A G38B
	08	I02A I02B I02C I12A I12B I12C I32A I32B I32C I32E I32F
	21B	X05Z
	Prä	B61B B61C B61D
81.74.00↔		BORP EML MBOR VAC VAC I VAC II VBOR
	01	B17A B17B
	04	E36A E36B
	06	G12A G16A G38A G38B
	08	I02A I02B I02C I32A I32B I32C I32E I32F
	21B	X05Z
81.74.10↔		BORP EML MBOR VAC VAC I VAC II VBOR
	01	B17A B17B
	04	E36A E36B
	06	G12A G16A G38A G38B
	08	I02A I02B I02C I32A I32B I32C I32E I32F
	21B	X05Z
81.74.21↔		BORP EML MBOR VAC VAC I VAC II VBOR
	01	B17A B17B
	04	E36A E36B
	06	G12A G16A G38A G38B
	08	I02A I02B I02C I32A I32B I32C I32E I32F
	21B	X05Z
81.74.99↔		BORP EML MBOR VAC VAC I VAC II VBOR
	01	B17A B17B
	04	E36A E36B
	06	G12A G16A G38A G38B
	08	I02A I02B I02C I32A I32B I32C I32E I32F
	21B	X05Z
81.75↔		BORP EML MBOR VAC VAC I VAC II VBOR
	04	E36A E36B
	06	G12A G16A G38A G38B
	08	I02A I02B I02C I32A I32B I32C I32D I32E I32F
	21B	X05Z
81.79↔	08	I02A I02B I02C I32A I32B I32C I32D I32E I32F
	21B	X04Z X05Z X06A X06B X06C
81.80.00↔		BORP EML KORP MBOR MKOR VAC VAC I VAC II VBOR VKOR
	04	E36A E36B
	06	G12A G16A G38A G38B
	08	I02A I02B I02C I05A I05B I12A I12B I12C
	21B	X06A X06B X06C
	Prä	B61B B61C B61D
81.80.09↔		BORP EML KORP MBOR MKOR VAC VAC I VAC II VBOR VKOR
	04	E36A E36B
	06	G12A G16A G38A G38B
	08	I02A I02B I02C I05A I05B I12A I12B I12C
	21B	X06A X06B X06C
	Prä	B61B B61C B61D
81.80.11↔		BORP EML KORP MBOR MKOR VAC VAC I VAC II VBOR VKOR
	04	E36A E36B
	06	G12A G16A G38A G38B
	08	I02A I02B I02C I05A I05B I12A I12B I12C
	21B	X06A X06B X06C
	Prä	B61B B61C B61D
81.80.12↔		BORP EML KORP MBOR MKOR VAC VAC I VAC II VBOR VKOR
	04	E36A E36B
	06	G12A G16A G38A G38B
	08	I02A I02B I02C I05A I05B I12A I12B I12C
	21B	X06A X06B X06C
	Prä	B61B B61C B61D
81.80.13↔		BORP EML KORP MBOR MKOR VAC VAC I VAC II VBOR VKOR
	04	E36A E36B
	06	G12A G16A G38A G38B
	08	I02A I02B I02C I05A I05B I12A I12B I12C

CHOP	MDC	DRG
	21B	X06A X06B X06C
	Prä	B61B B61C B61D
81.80.21↔		BORP KORP MBOR MKOR VAC VAC I VAC II VBOR VKOR
	04	E36A E36B
	06	G12A G16A G38A G38B
	08	I02A I02B I02C I05A I05B I12A I12B
	21B	X06A X06B X06C
	Prä	B61B B61C B61D
81.80.22↔		BORP KORP MBOR MKOR VAC VAC I VAC II VBOR VKOR
	04	E36A E36B
	06	G12A G16A G38A G38B
	08	I02A I02B I02C I05A I05B I12A I12B
	21B	X06A X06B X06C
	Prä	B61B B61C B61D
81.80.23↔		BORP KORP MBOR MKOR VAC VAC I VAC II VBOR VKOR
	04	E36A E36B
	06	G12A G16A G38A G38B
	08	I02A I02B I02C I05A I05B I12A I12B
	21B	X06A X06B X06C
	Prä	B61B B61C B61D
81.81.00↔		BORP EML MBOR VAC VAC I VAC II VBOR
	04	E36A E36B
	06	G12A G16A G38A G38B
	08	I02A I02B I02C I05A I05B I05C I12A I12B I12C
	21B	X06A X06B X06C
	Prä	B61B B61C B61D
81.81.09↔		BORP EML MBOR VAC VAC I VAC II VBOR
	04	E36A E36B
	06	G12A G16A G38A G38B
	08	I02A I02B I02C I05A I05B I05C I12A I12B I12C
	21B	X06A X06B X06C
	Prä	B61B B61C B61D
81.81.11↔		BORP EML MBOR VAC VAC I VAC II VBOR
	04	E36A E36B
	06	G12A G16A G38A G38B
	08	I02A I02B I02C I05A I05B I05C I12A I12B I12C
	21B	X06A X06B X06C
	Prä	B61B B61C B61D
81.81.12↔		BORP EML MBOR VAC VAC I VAC II VBOR
	04	E36A E36B
	06	G12A G16A G38A G38B
	08	I02A I02B I02C I05A I05B I05C I12A I12B I12C
	21B	X06A X06B X06C
	Prä	B61B B61C B61D
81.81.13↔		BORP EML MBOR VAC VAC I VAC II VBOR
	04	E36A E36B
	06	G12A G16A G38A G38B
	08	I02A I02B I02C I05A I05B I05C I12A I12B I12C
	21B	X06A X06B X06C
	Prä	B61B B61C B61D
81.81.21↔		BORP EML MBOR VAC VAC I VAC II VBOR
	04	E36A E36B
	06	G12A G16A G38A G38B
	08	I02A I02B I02C I05A I05B I05C I12A I12B I12C
	21B	X06A X06B X06C
	Prä	B61B B61C B61D
81.81.22↔		BORP KORP MBOR MKOR VAC VAC I VAC II VBOR VKOR
	04	E36A E36B
	06	G12A G16A G38A G38B
	08	I02A I02B I02C I05A I05B I12A I12B I12C
	21B	X06A X06B X06C
	Prä	B61B B61C B61D
81.81.23↔		BORP EML MBOR VAC VAC I VAC II VBOR
	04	E36A E36B
	06	G12A G16A G38A G38B
	08	I02A I02B I02C I05A I05B I05C I12A I12B I12C
	21B	X06A X06B X06C
	Prä	B61B B61C B61D
81.81.31↔		BORP EML MBOR VAC VAC I VAC II VBOR
	04	E36A E36B
	06	G12A G16A G38A G38B
	08	I02A I02B I02C I05A I05B I05C I12A I12B I12C
	21B	X06A X06B X06C
	Prä	B61B B61C B61D
81.81.32↔		BORP EML MBOR VAC VAC I VAC II VBOR
	04	E36A E36B
	06	G12A G16A G38A G38B
	08	I02A I02B I02C I05A I05B I05C I12A I12B I12C
	21B	X06A X06B X06C
	Prä	B61B B61C B61D
81.81.33↔		BORP EML MBOR VAC VAC I VAC II VBOR
	04	E36A E36B
	06	G12A G16A G38A G38B
	08	I02A I02B I02C I05A I05B I05C I12A I12B I12C
	21B	X06A X06B X06C
	Prä	B61B B61C B61D
81.81.34↔		BORP EML MBOR VAC VAC I VAC II VBOR
	04	E36A E36B
	06	G12A G16A G38A G38B
	08	I02A I02B I02C I05A I05B I05C I12A I12B I12C
	21B	X06A X06B X06C
	Prä	B61B B61C B61D
81.81.35↔		BORP EML MBOR VAC VAC I VAC II VBOR
	04	E36A E36B
	06	G12A G16A G38A G38B
	08	I02A I02B I02C I05A I05B I05C I12A I12B I12C
	21B	X06A X06B X06C
	Prä	B61B B61C B61D
81.82.00↔		BORP EML MBOR VAC VAC I VAC II VBOR
	04	E36A E36B
	06	G12A G16A G38A G38B
	08	I02A I02B I02C I12A I12B I12C I29A I29B I29C
	21B	X06A X06B X06C
	Prä	B61B B61C B61D
81.82.09↔		BORP EML MBOR VAC VAC I VAC II VBOR
	01	B03A B03B B03C
	04	E36A E36B
	05	F04Z F13A F13B F13C
	06	G12A G16A G38A G38B
	08	I02A I02B I02C I12A I12B I12C I29A I29B
	10	K09A K09B
	21B	X06A X06B X06C
	Prä	B61B B61C B61D
81.82.31↔		BORP EML MBOR VAC VAC I VAC II VBOR
	01	B03A B03B B03C
	04	E36A E36B
	05	F04Z F13A F13B

PROC

PROC

CHOP	MDC	DRG
		F13C
	06	G12A G16A G38A G38B
	08	I02A I02B I02C I12A I12B I12C I29A I29B
	10	K09A K09B
	21B	X06A X06B X06C
	Prä	B61B B61C B61D
81.82.32↔		BORP EML MBOR VAC VAC I VAC II VBOR
	01	B03A B03B B03C
	04	E36A E36B
	05	F04Z F13A F13B F13C
	06	G12A G16A G38A G38B
	08	I02A I02B I02C I12A I12B I12C I29A I29B I29C
	10	K09A K09B
	21B	X06A X06B X06C
	Prä	B61B B61C B61D
81.82.33↔		BORP EML MBOR VAC VAC I VAC II VBOR
	01	B03A B03B B03C
	04	E36A E36B
	05	F04Z F13A F13B F13C
	06	G12A G16A G38A G38B
	08	I02A I02B I02C I12A I12B I12C I29A I29B
	10	K09A K09B
	21B	X06A X06B X06C
	Prä	B61B B61C B61D
81.82.34↔		BORP EML MBOR VAC VAC I VAC II VBOR
	01	B03A B03B B03C
	04	E36A E36B
	05	F04Z F13A F13B F13C
	06	G12A G16A G38A G38B
	08	I02A I02B I02C I12A I12B I12C I29A I29B
	10	K09A K09B
	21B	X06A X06B X06C
	Prä	B61B B61C B61D
81.82.35↔		BORP EML MBOR VAC VAC I VAC II VBOR
	04	E36A E36B
	06	G12A G16A G38A G38B
	08	I02A I02B I02C I12A I12B I12C I29A I29B
	21B	X06A X06B X06C
	Prä	B61B B61C B61D
81.82.41↔		BORP EML MBOR VAC VAC I VAC II VBOR
	01	B03A B03B B03C
	04	E36A E36B
	05	F04Z F13A F13B F13C
	06	G12A G16A G38A G38B
	08	I02A I02B I02C I12A I12B I12C I29A I29B
	10	K09A K09B
	21B	X06A X06B X06C
	Prä	B61B B61C B61D
81.82.42↔		BORP EML MBOR VAC VAC I VAC II VBOR
	01	B03A B03B B03C
	04	E36A E36B
	05	F04Z F13A F13B F13C
	06	G12A G16A G38A G38B
	08	I02A I02B I02C I12A I12B I12C I29A I29B
	10	K09A K09B
	21B	X06A X06B X06C
	Prä	B61B B61C B61D
81.82.43↔		BORP EML MBOR VAC VAC I VAC II VBOR
	01	B03A B03B B03C
	04	E36A E36B
	05	F04Z F13A F13B F13C
	06	G12A G16A G38A G38B
	08	I02A I02B I02C I12A I12B I12C I29A I29B
	10	K09A K09B
	21B	X06A X06B X06C
	Prä	B61B B61C B61D
81.82.44↔		BORP EML MBOR VAC VAC I VAC II VBOR
	01	B03A B03B B03C
	04	E36A E36B
	05	F04Z F13A F13B F13C
	06	G12A G16A G38A G38B
	08	I02A I02B I02C I12A I12B I12C I29A I29B I29C
	10	K09A K09B
	21B	X06A X06B X06C
	Prä	B61B B61C B61D
81.82.45↔		BORP EML MBOR VAC VAC I VAC II VBOR
	04	E36A E36B
	06	G12A G16A G38A G38B
	08	I02A I02B I02C I12A I12B I12C I29A I29B
	21B	X06A X06B X06C
	Prä	B61B B61C B61D
81.82.46↔		BORP MBOR VAC VAC I VAC II VBOR
	01	B17A B17B
	04	E36A E36B
	05	F04Z F13A F13B F13C
	06	G12A G16A G38A G38B
	08	I02A I02B I02C I08A I08B I12A I12B I12C I13A I13B I29A I29B
	10	K09A K09B
	21B	X04Z X05Z X06A X06B X06C
	Prä	B61B B61C B61D
81.82.47↔		BORP MBOR VAC VAC I VAC II VBOR
	01	B17A B17B
	04	E36A E36B
	05	F04Z F13A F13B F13C
	06	G12A G16A G38A G38B
	08	I02A I02B I02C I08A I08B I12A I12B I12C I13A I13B I29A I29B
	10	K09A K09B
	21B	X04Z X05Z X06A X06B X06C
	Prä	B61B B61C B61D
81.83.00↔		BORP EML MBOR VAC VAC I VAC II VBOR
	01	B03A B03B B03C
	04	E36A E36B
	05	F04Z F13A F13B F13C
	06	G12A G16A G38A G38B
	08	I02A I02B I02C I12A I12B I12C I29A I29B I29C
	10	K09A K09B
	21B	X06A X06B X06C
	Prä	B61B B61C B61D
81.83.10↔		BORP EML MBOR VAC VAC I VAC II VBOR
	01	B03A B03B B03C
	04	E36A E36B
	05	F04Z F13A F13B F13C
	06	G12A G16A G38A G38B
	08	I02A I02B I02C I12A I12B I12C I29A I29B I29C
	10	K09A K09B
	21B	X06A X06B X06C
	Prä	B61B B61C B61D
81.83.11↔		BORP EML MBOR VAC VAC I VAC II VBOR
	01	B03A B03B B03C
	04	E36A E36B
	05	F04Z F13A F13B F13C
	06	G12A G16A G38A G38B
	08	I02A I02B I02C I12A I12B I12C I29A I29B I29C

CHOP	MDC	DRG
	10	K09A K09B
	21B	X06A X06B X06C
	Prä	B61B B61C B61D
81.83.12↔		BORP EML MBOR VAC VAC I VAC II VBOR
	01	B03A B03B B03C
	04	E36A E36B
	05	F04Z F13A F13B F13C
	06	G12A G16A G38A G38B
	08	I02A I02B I02C I12A I12B I12C I29A I29B I29C
	10	K09A K09B
	21B	X06A X06B X06C
	Prä	B61B B61C B61D
81.83.13↔		BORP EML MBOR VAC VAC I VAC II VBOR
	01	B03A B03B B03C
	04	E36A E36B
	05	F04Z F13A F13B F13C
	06	G12A G16A G38A G38B
	08	I02A I02B I02C I12A I12B I12C I29A I29B I29C
	10	K09A K09B
	21B	X06A X06B X06C
	Prä	B61B B61C B61D
81.83.22↔	08	I29A I29B I29C
81.83.23↔	08	I29A I29B I29C
81.83.26↔		BORP EML MBOR VAC VAC I VAC II VBOR
	01	B03A B03B B03C
	04	E36A E36B
	05	F04Z F13A F13B F13C
	06	G12A G16A G38A G38B
	08	I02A I02B I02C I12A I12B I12C I29A I29B I29C
	10	K09A K09B
	21B	X06A X06B X06C
	Prä	B61B B61C B61D
81.83.27↔		BORP EML MBOR VAC VAC I VAC II VBOR
	01	B03A B03B B03C
	04	E36A E36B
	05	F04Z F13A F13B F13C
	06	G12A G16A G38A G38B
	08	I02A I02B I02C I12A I12B I12C I29A I29B I29C
	10	K09A K09B
	21B	X06A X06B X06C
	Prä	B61B B61C B61D
81.83.28↔		BORP EML MBOR VAC VAC I VAC II VBOR
	01	B03A B03B B03C
	04	E36A E36B
	05	F04Z F13A F13B F13C
	06	G12A G16A G38A G38B
	08	I02A I02B I02C I12A I12B I12C I29A I29B I29C
	10	K09A K09B
	21B	X06A X06B X06C
	Prä	B61B B61C B61D
81.83.29↔		BORP EML MBOR VAC VAC I VAC II VBOR
	01	B03A B03B B03C
	04	E36A E36B
	05	F04Z F13A F13B F13C
	06	G12A G16A G38A G38B
	08	I02A I02B I02C I12A I12B I12C I29A I29B I29C
	10	K09A K09B
	21B	X06A X06B X06C
	Prä	B61B B61C B61D
81.83.30↔		BORP EML MBOR VAC VAC I VAC II VBOR
	01	B03A B03B B03C
	04	E36A E36B
	05	F04Z F13A F13B F13C
	06	G12A G16A G38A G38B
	08	I02A I02B I02C I12A I12B I12C I29A I29B
	10	K09A K09B
	21B	X06A X06B X06C
	Prä	B61B B61C B61D
81.83.31↔		BORP EML MBOR VAC VAC I VAC II VBOR
	01	B03A B03B B03C
	04	E36A E36B
	05	F04Z F13A F13B F13C
	06	G12A G16A G38A G38B
	08	I02A I02B I02C I12A I12B I12C I29A I29B
	10	K09A K09B
	21B	X06A X06B X06C
	Prä	B61B B61C B61D
81.83.35↔		BORP EML MBOR VAC VAC I VAC II VBOR
	01	B03A B03B B03C
	04	E36A E36B
	05	F04Z F13A F13B F13C
	06	G12A G16A G38A G38B
	08	I02A I02B I02C I12A I12B I12C I29A I29B
	10	K09A K09B
	21B	X06A X06B X06C
	Prä	B61B B61C B61D
81.83.36↔		BORP EML MBOR VAC VAC I VAC II VBOR
	01	B03A B03B B03C
	04	E36A E36B
	05	F04Z F13A F13B F13C
	06	G12A G16A G38A G38B
	08	I02A I02B I02C I12A I12B I12C I29A I29B
	10	K09A K09B
	21B	X06A X06B X06C
	Prä	B61B B61C B61D
81.83.40↔		BORP EML MBOR VAC VAC I VAC II VBOR
	01	B03A B03B B03C
	04	E36A E36B
	05	F04Z F13A F13B F13C
	06	G12A G16A G38A G38B
	08	I02A I02B I02C I12A I12B I12C I29A I29B I29C
	10	K09A K09B
	21B	X06A X06B X06C
	Prä	B61B B61C B61D
81.83.51↔		BORP EML MBOR VAC VAC I VAC II VBOR
	01	B03A B03B B03C
	04	E36A E36B
	05	F04Z F13A F13B F13C
	06	G12A G16A G38A G38B
	08	I02A I02B I02C I12A I12B I12C I29A I29B I29C
	10	K09A K09B
	21B	X06A X06B X06C
	Prä	B61B B61C B61D
81.83.99↔		BORP EML MBOR VAC VAC I VAC II VBOR
	01	B03A B03B B03C
	04	E36A E36B
	05	F04Z F13A F13B F13C
	06	G12A G16A G38A G38B
	08	I02A I02B I02C I12A I12B I12C I29A I29B I29C
	10	K09A K09B
	21B	X06A X06B X06C
	Prä	B61B B61C B61D
81.84↔		BORP EML KORP MBOR MKOR VAC VAC I VAC II VBOR VKOR
	04	E36A E36B
	06	G12A G16A G38A G38B
	08	I05A I05B
	21B	X06A X06B X06C
81.85.00↔		BORP EML MBOR

PROC

PROC

CHOP	MDC	DRG
		VAC VAC I VAC II
		VBOR
	01	B03A B03B B03C
	04	E36A E36B
	06	G12A G16A G38A
		G38B
	08	I02A I02B I02C
		I12A I12B I12C
		I27A I27B I27C
		I27D I31A I31B
	21B	X06A X06B X06C
	Prä	B61B B61C B61D
81.85.10↔		BORP EML MBOR
		VAC VAC I VAC II
		VBOR
	01	B03A B03B B03C
	04	E36A E36B
	06	G12A G16A G38A
		G38B
	08	I02A I02B I02C
		I12A I12B I12C
		I27A I27B I27C
		I27D I31A I31B
	21B	X06A X06B X06C
	Prä	B61B B61C B61D
81.85.11↔		BORP EML MBOR
		VAC VAC I VAC II
		VBOR
	01	B03A B03B B03C
	04	E36A E36B
	06	G12A G16A G38A
		G38B
	08	I02A I02B I02C
		I12A I12B I12C
		I27A I27B I27C
		I27D I31A I31B
	21B	X06A X06B X06C
	Prä	B61B B61C B61D
81.85.18↔		BORP EML MBOR
		VAC VAC I VAC II
		VBOR
	01	B03A B03B B03C
	04	E36A E36B
	06	G12A G16A G38A
		G38B
	08	I02A I02B I02C
		I12A I12B I12C
		I27A I27B I27C
		I27D I31A I31B
	21B	X06A X06B X06C
	Prä	B61B B61C B61D
81.85.19↔		BORP EML MBOR
		VAC VAC I VAC II
		VBOR
	01	B03A B03B B03C
	04	E36A E36B
	06	G12A G16A G38A
		G38B
	08	I02A I02B I02C
		I12A I12B I12C
		I27A I27B I27C
		I27D I31A I31B
	21B	X06A X06B X06C
	Prä	B61B B61C B61D
81.85.20↔		BORP EML MBOR
		VAC VAC I VAC II
		VBOR
	01	B03A B03B B03C
	04	E36A E36B
	06	G12A G16A G38A
		G38B
	08	I02A I02B I02C
		I12A I12B I12C
		I27A I27B I27C
		I27D I31A I31B
	21B	X06A X06B X06C
	Prä	B61B B61C B61D
81.85.21↔		BORP EML MBOR
		VAC VAC I VAC II
		VBOR
	01	B03A B03B B03C
	04	E36A E36B
	06	G12A G16A G38A
		G38B
	08	I02A I02B I02C
		I12A I12B I12C
		I31A I31B
	21B	X06A X06B X06C
	Prä	B61B B61C B61D
81.85.22↔		BORP EML MBOR
		VAC VAC I VAC II
		VBOR
	01	B03A B03B B03C
	04	E36A E36B
	06	G12A G16A G38A
		G38B
	08	I02A I02B I02C
		I12A I12B I12C
		I27A I27B I27C
		I27D I31A I31B
	21B	X06A X06B X06C
	Prä	B61B B61C B61D
81.85.30↔		BORP EML MBOR
		VAC VAC I VAC II
		VBOR
	01	B03A B03B B03C
	04	E36A E36B
	06	G12A G16A G38A
		G38B
	08	I02A I02B I02C
		I05A I05B I05C
		I12A I12B I12C
	21B	X06A X06B X06C
	Prä	B61B B61C B61D
81.85.31↔		BORP EML MBOR
		VAC VAC I VAC II
		VBOR
	04	E36A E36B
	06	G12A G16A G38A
		G38B
	08	I02A I02B I02C
		I05A I05B I05C
		I12A I12B I12C
		I31A I31B
	21B	X05Z
	Prä	B61B B61C B61D
81.85.99↔		BORP EML MBOR
		VAC VAC I VAC II
		VBOR
	01	B03A B03B B03C
	04	E36A E36B
	06	G12A G16A G38A
		G38B
	08	I02A I02B I02C
		I12A I12B I12C
		I27A I27B I27C
		I27D I31A I31B
	21B	X06A X06B X06C
	Prä	B61B B61C B61D
81.93.10↔		BORP EML MBOR
		G38B
	08	I02A I02B I02C
		I12A I12B I12C
		I27A I27B I27C
		I27D I31A I31B
	21B	X06A X06B X06C
	Prä	B61B B61C B61D
81.93.20↔		BORP EML MBOR
		VAC VAC I VAC II
		VBOR
	01	B17A B17B
	04	E36A E36B
	06	G12A G16A G38A
		G38B
	08	I02A I02B I02C
		I12A I12B I12C
		I27A I27B I27C
		I27D I32A I32B
		I32C I32D I32E
		I32F
	09	J02A J02B J03A
		J03B J04Z J11A
		J11B
	21B	X04Z X05Z X06A
		X06B X06C
	Prä	B61B B61C B61D
81.93.21↔		BORP EML MBOR
		VAC VAC I VAC II
		VBOR
	01	B17A B17B
	04	E36A E36B
	06	G12A G16A G38A
		G38B
	08	I02A I02B I02C
		I12A I12B I12C
		I32A I32B I32C
		I32D I32E I32F
	09	J02A J02B J03A
		J03B J04Z J11A
		J11B
	21B	X04Z X05Z X06A
		X06B X06C
	Prä	B61B B61C B61D
81.93.30↔		BORP EML MBOR
		VAC VAC I VAC II
		VBOR
	01	B17A B17B
	04	E36A E36B
	06	G12A G16A G38A
		G38B
	08	I02A I02B I02C
		I12A I12B I12C
		I32A I32B I32C
		I32D I32E I32F
	09	J02A J02B J03A
		J03B J04Z J11A
		J11B
	21B	X04Z X05Z X06A
		X06B X06C
	Prä	B61B B61C B61D

CHOP	MDC	DRG
81.93.99↔		BORP EML MBOR VAC VAC I VAC II VBOR
	01	B17A B17B
	04	E36A E36B
	06	G12A G16A G38A G38B
	08	I02A I02B I02C I12A I12B I12C I27A I27B I27C I27D I32A I32B I32C I32D I32E I32F
	09	J02A J02B J03A J03B J04Z J11A J11B
	21B	X04Z X05Z X06A X06B X06C
	Prä	B61B B61C B61D
81.94↔		BORP EML MBOR VAC VAC I VAC II VBOR
	01	B03A B03B B03C
	04	E36A E36B
	05	F04Z F13A F13B F13C
	06	G12A G16A G38A G38B
	08	I02A I02B I02C I12A I12B I12C I59Z
	21B	X04Z
	Prä	B61B B61C B61D
81.95.00↔		BORP EML MBOR VAC VAC I VAC II VBOR
	01	B03A B03B B03C
	04	E36A E36B
	06	G12A G16A G38A G38B
	08	I18A I18B I18C
	21B	X04Z
81.95.09↔		BORP EML MBOR VAC VAC I VAC II VBOR
	01	B03A B03B B03C
	04	E36A E36B
	06	G12A G16A G38A G38B
	08	I18A I18B I18C
	21B	X04Z
81.95.10↔		BORP EML MBOR VAC VAC I VAC II VBOR
	01	B03A B03B B03C
	04	E36A E36B
	06	G12A G16A G38A G38B
	08	I18A I18B I18C I30A I30B I30C
	21B	X04Z
81.95.11↔		BORP EML MBOR VAC VAC I VAC II VBOR
	01	B03A B03B B03C
	04	E36A E36B
	06	G12A G16A G38A G38B
	08	I18A I18B I18C I30A I30B I30C
	21B	X04Z
81.95.12↔		BORP EML MBOR VAC VAC I VAC II VBOR
	01	B03A B03B B03C
	04	E36A E36B
	06	G12A G16A G38A G38B
	08	I18A I18B I18C I30A I30B I30C
	21B	X04Z
81.95.13↔		BORP EML MBOR VAC VAC I VAC II VBOR
	01	B03A B03B B03C
	04	E36A E36B
	06	G12A G16A G38A G38B
	08	I18A I18B I18C I30A I30B I30C
	21B	X04Z
81.95.14↔		BORP EML MBOR VAC VAC I VAC II VBOR
	01	B03A B03B B03C
	04	E36A E36B
	06	G12A G16A G38A G38B
	08	I18A I18B I18C I30A I30B I30C
	21B	X04Z
81.95.15↔		BORP EML MBOR VAC VAC I VAC II VBOR
	01	B03A B03B B03C
	04	E36A E36B
	06	G12A G16A G38A G38B
	08	I18A I18B I18C I30A I30B I30C
	21B	X04Z
81.95.16↔		BORP EML MBOR VAC VAC I VAC II VBOR
	01	B03A B03B B03C
	04	E36A E36B
	06	G12A G16A G38A G38B
	08	I18A I18B I18C I30A I30B I30C
	21B	X04Z
81.95.17↔		BORP EML MBOR VAC VAC I VAC II VBOR
	01	B03A B03B B03C
	04	E36A E36B
	06	G12A G16A G38A G38B
	08	I18A I18B I18C I30A I30B I30C
	21B	X04Z
81.95.18↔		BORP EML MBOR VAC VAC I VAC II VBOR
	01	B03A B03B B03C
	04	E36A E36B
	06	G12A G16A G38A G38B
	08	I18A I18B I18C I30A I30B I30C
	21B	X04Z
81.95.1A↔		BORP EML MBOR VAC VAC I VAC II VBOR
	01	B03A B03B B03C
	04	E36A E36B
	06	G12A G16A G38A G38B
	08	I18A I18B I18C
	21B	X04Z
81.95.21↔		BORP EML MBOR VAC VAC I VAC II VBOR
	01	B03A B03B B03C
	04	E36A E36B
	06	G12A G16A G38A G38B
	08	I18A I18B I18C
	21B	X04Z
81.95.22↔		BORP EML MBOR VAC VAC I VAC II VBOR
	01	B03A B03B B03C
	04	E36A E36B
	06	G12A G16A G38A G38B
	08	I18A I18B I18C
	21B	X04Z
81.96.10↔		BORP MBOR VAC VAC I VAC II VBOR
	04	E36A E36B
	06	G12A G16A G38A G38B
	08	I02A I02B I02C I12A I12B I12C I29A I29B I29C
	21B	X06A X06B X06C
	Prä	B61B B61C B61D
81.96.11↔		BORP MBOR VAC VAC I VAC II VBOR
	04	E36A E36B
	06	G12A G16A G38A G38B
	08	I02A I02B I02C I12A I12B I12C I29A I29B I29C
	21B	X06A X06B X06C
	Prä	B61B B61C B61D
81.96.12↔		BORP MBOR VAC VAC I VAC II VBOR
	04	E36A E36B
	06	G12A G16A G38A G38B
	08	I02A I02B I02C I12A I12B I12C I29A I29B I29C
	21B	X06A X06B X06C
	Prä	B61B B61C B61D
81.96.19↔		BORP MBOR VAC VAC I VAC II VBOR
	04	E36A E36B
	06	G12A G16A G38A G38B
	08	I02A I02B I02C I12A I12B I12C I29A I29B I29C
	21B	X06A X06B X06C
	Prä	B61B B61C B61D
81.96.1A↔		BORP MBOR VAC VAC I VAC II VBOR

PROC

CHOP	MDC	DRG
	04	E36A E36B
	06	G12A G16A G38A G38B
	08	I02A I02B I02C I12A I12B I12C I29A I29B I29C
	21B	X06A X06B X06C
	Prä	B61B B61C B61D
81.96.1B↔		BORP MBOR VAC VAC I VAC II VBOR
	04	E36A E36B
	06	G12A G16A G38A G38B
	08	I02A I02B I02C I12A I12B I12C I29A I29B I29C
	21B	X06A X06B X06C
	Prä	B61B B61C B61D
81.96.1C↔		BORP MBOR VAC VAC I VAC II VBOR
	04	E36A E36B
	06	G12A G16A G38A G38B
	08	I02A I02B I02C I12A I12B I12C I29A I29B I29C
	21B	X06A X06B X06C
	Prä	B61B B61C B61D
81.96.1D↔		BORP MBOR VAC VAC I VAC II VBOR
	04	E36A E36B
	06	G12A G16A G38A G38B
	08	I02A I02B I02C I12A I12B I12C I29A I29B I29C
	21B	X06A X06B X06C
	Prä	B61B B61C B61D
81.96.20↔		BORP MBOR VAC VAC I VAC II VBOR
	01	B03A B03B B03C
	04	E36A E36B
	06	G12A G16A G38A G38B
	08	I02A I02B I02C I32A I32B I32C I32D I32E I32F
	21B	X05Z
81.96.21↔		BORP MBOR VAC VAC I VAC II VBOR
	01	B03A B03B B03C
	04	E36A E36B
	06	G12A G16A G38A G38B
	08	I02A I02B I02C I32A I32B I32C I32D I32E I32F
	21B	X05Z
81.96.22↔		BORP MBOR VAC VAC I VAC II VBOR
	01	B03A B03B B03C
	04	E36A E36B
	06	G12A G16A G38A G38B
	08	I02A I02B I02C I32A I32B I32C I32D I32E I32F
	21B	X05Z
81.96.29↔		BORP MBOR VAC VAC I VAC II VBOR

CHOP	MDC	DRG
	01	B03A B03B B03C
	04	E36A E36B
	06	G12A G16A G38A G38B
	08	I02A I02B I02C I32A I32B I32C I32D I32E I32F
	21B	X05Z
81.96.2A↔		BORP MBOR VAC VAC I VAC II VBOR
	01	B03A B03B B03C
	04	E36A E36B
	06	G12A G16A G38A G38B
	08	I02A I02B I02C I32A I32B I32C I32D I32E I32F
	21B	X05Z
81.96.2B↔		BORP MBOR VAC VAC I VAC II VBOR
	01	B03A B03B B03C
	04	E36A E36B
	06	G12A G16A G38A G38B
	08	I02A I02B I02C I32A I32B I32C I32D I32E I32F
	21B	X05Z
81.96.2C↔		BORP MBOR VAC VAC I VAC II VBOR
	01	B03A B03B B03C
	04	E36A E36B
	06	G12A G16A G38A G38B
	08	I02A I02B I02C I32A I32B I32C I32D I32E I32F
	21B	X05Z
81.96.2D↔		BORP EML MBOR VAC VAC I VAC II VBOR
	01	B03A B03B B03C
	04	E36A E36B
	06	G12A G16A G38A G38B
	08	I02A I02B I02C I05A I05B I05C I12A I12B I12C I31A I31B
	21B	X06A X06B X06C
	Prä	B61B B61C B61D
81.96.2E↔		BORP MBOR VAC VAC I VAC II VBOR
	01	B03A B03B B03C
	04	E36A E36B
	06	G12A G16A G38A G38B
	08	I02A I02B I02C I32A I32B I32C I32D I32E I32F
	21B	X05Z
81.96.30↔		BORP MBOR VAC VAC I VAC II VBOR
	04	E36A E36B
	06	G12A G16A G38A G38B
	08	I27A I27B I27C I27D I28A I28B I28C
81.96.31↔		BORP MBOR VAC

CHOP	MDC	DRG
		VAC I VAC II VBOR
	04	E36A E36B
	06	G12A G16A G38A G38B
	08	I27A I27B I27C I27D I28A I28B I28C
81.96.32↔		BORP MBOR VAC VAC I VAC II VBOR
	04	E36A E36B
	06	G12A G16A G38A G38B
	08	I27A I27B I27C I27D I28A I28B I28C
81.96.39↔		BORP MBOR VAC VAC I VAC II VBOR
	04	E36A E36B
	06	G12A G16A G38A G38B
	08	I27A I27B I27C I27D I28A I28B I28C
81.96.3A↔		BORP MBOR VAC VAC I VAC II VBOR
	04	E36A E36B
	06	G12A G16A G38A G38B
	08	I27A I27B I27C I27D I28A I28B I28C
81.96.3B↔		BORP MBOR VAC VAC I VAC II VBOR
	04	E36A E36B
	06	G12A G16A G38A G38B
	08	I27A I27B I27C I27D I28A I28B I28C
81.96.3C↔		BORP MBOR VAC VAC I VAC II VBOR
	04	E36A E36B
	06	G12A G16A G38A G38B
	08	I27A I27B I27C I27D I28A I28B I28C
81.96.3D↔		BORP MBOR VAC VAC I VAC II VBOR
	04	E36A E36B
	06	G12A G16A G38A G38B
	08	I27A I27B I27C I27D I28A I28B I28C
81.96.41↔		BORP MBOR VAC VAC I VAC II VBOR
	01	B03A B03B B03C
	04	E36A E36B
	06	G12A G16A G38A G38B
	08	I02A I02B I02C I12A I12B I12C I13A I13B I13C I13D I20A I20B I20C I20D I20E I20F I20G
	21B	X04Z
	Prä	B61B B61C B61D
81.96.42↔		BORP MBOR VAC

CHOP	MDC	DRG
		VAC I VAC II VBOR
	01	B03A B03B B03C
	04	E36A E36B
	06	G12A G16A G38A G38B
	08	I02A I02B I02C I12A I12B I12C I13A I13B I13C I13D I20A I20B I20C I20D I20E I20F I20G
	21B	X04Z
	Prä	B61B B61C B61D
81.96.49↔		BORP MBOR VAC
		VAC I VAC II VBOR
	01	B03A B03B B03C
	04	E36A E36B
	06	G12A G16A G38A G38B
	08	I02A I02B I02C I12A I12B I12C I13A I13B I13C I13D I20A I20B I20C I20D I20E I20F I20G
	21B	X04Z
	Prä	B61B B61C B61D
81.96.4A↔		BORP MBOR VAC
		VAC I VAC II VBOR
	01	B03A B03B B03C
	04	E36A E36B
	06	G12A G16A G38A G38B
	08	I02A I02B I02C I12A I12B I12C I13A I13B I13C I13D I20A I20B I20C I20D I20E I20F I20G
	21B	X04Z
	Prä	B61B B61C B61D
81.96.4B↔		BORP MBOR VAC
		VAC I VAC II VBOR
	01	B03A B03B B03C
	04	E36A E36B
	06	G12A G16A G38A G38B
	08	I02A I02B I02C I12A I12B I12C I13A I13B I13C I13D I20A I20B I20C I20D I20E I20F I20G
	21B	X04Z
	Prä	B61B B61C B61D
81.96.4C↔		BORP MBOR VAC
		VAC I VAC II VBOR
	01	B03A B03B B03C
	04	E36A E36B
	06	G12A G16A G38A G38B
	08	I02A I02B I02C I12A I12B I12C I13A I13B I13C I13D I20A I20B I20C I20D I20E I20F I20G
	21B	X04Z
	Prä	B61B B61C B61D
81.96.4D↔		BORP MBOR VAC

CHOP	MDC	DRG
		VAC I VAC II VBOR
	01	B03A B03B B03C
	04	E36A E36B
	06	G12A G16A G38A G38B
	08	I02A I02B I02C I12A I12B I12C I13A I13B I13C I13D I20A I20B I20C I20D I20E I20F I20G
	21B	X04Z
	Prä	B61B B61C B61D
81.96.51↔		BORP MBOR VAC
		VAC I VAC II VBOR
	01	B03A B03B B03C
	04	E36A E36B
	06	G12A G16A G38A G38B
	08	I02A I02B I02C I12A I12B I12C I20A I20B I20C I20D I20E I20F I20G
	21B	X04Z
	Prä	B61B B61C B61D
81.96.52↔		BORP MBOR VAC
		VAC I VAC II VBOR
	01	B03A B03B B03C
	04	E36A E36B
	06	G12A G16A G38A G38B
	08	I02A I02B I02C I12A I12B I12C I20A I20B I20C I20D I20E I20F I20G
	21B	X04Z
	Prä	B61B B61C B61D
81.96.59↔		BORP MBOR VAC
		VAC I VAC II VBOR
	01	B03A B03B B03C
	04	E36A E36B
	06	G12A G16A G38A G38B
	08	I02A I02B I02C I12A I12B I12C I20A I20B I20C I20D I20E I20F I20G
	21B	X04Z
	Prä	B61B B61C B61D
81.96.5A↔		BORP MBOR VAC
		VAC I VAC II VBOR
	01	B03A B03B B03C
	04	E36A E36B
	06	G12A G16A G38A G38B
	08	I02A I02B I02C I12A I12B I12C I20A I20B I20C I20D I20E I20F I20G
	21B	X04Z
	Prä	B61B B61C B61D
81.96.5B↔		BORP MBOR VAC
		VAC I VAC II VBOR
	01	B03A B03B B03C
	04	E36A E36B
	06	G12A G16A G38A

CHOP	MDC	DRG
		G38B
	08	I02A I02B I02C I12A I12B I12C I20A I20B I20C I20D I20E I20F I20G
	21B	X04Z
	Prä	B61B B61C B61D
81.96.5C↔		BORP MBOR VAC
		VAC I VAC II VBOR
	01	B03A B03B B03C
	04	E36A E36B
	06	G12A G16A G38A G38B
	08	I02A I02B I02C I12A I12B I12C I20A I20B I20C I20D I20E I20F I20G
	21B	X04Z
	Prä	B61B B61C B61D
81.96.5D↔		BORP MBOR VAC
		VAC I VAC II VBOR
	01	B03A B03B B03C
	04	E36A E36B
	06	G12A G16A G38A G38B
	08	I02A I02B I02C I12A I12B I12C I20A I20B I20C I20D I20E I20F I20G
	21B	X04Z
	Prä	B61B B61C B61D
81.96.61↔		BORP MBOR VAC
		VAC I VAC II VBOR
	01	B03A B03B B03C
	04	E36A E36B
	06	G12A G16A G38A G38B
	08	I02A I02B I02C I12A I12B I12C I20A I20B I20C I20D I20E I20F I20G
	21B	X04Z
	Prä	B61B B61C B61D
81.96.62↔		BORP MBOR VAC
		VAC I VAC II VBOR
	01	B03A B03B B03C
	04	E36A E36B
	06	G12A G16A G38A G38B
	08	I02A I02B I02C I12A I12B I12C I20A I20B I20C I20D I20E I20F I20G
	21B	X04Z
	Prä	B61B B61C B61D
81.96.69↔		BORP MBOR VAC
		VAC I VAC II VBOR
	01	B03A B03B B03C
	04	E36A E36B
	06	G12A G16A G38A G38B
	08	I02A I02B I02C I12A I12B I12C I20A I20B I20C I20D I20E I20F

PROC

PROC

CHOP	MDC	DRG
		I20G
	21B	X04Z
	Prä	B61B B61C B61D
81.96.6A↔		BORP MBOR VAC
		VAC I VAC II VBOR
	01	B03A B03B B03C
	04	E36A E36B
	06	G12A G16A G38A
		G38B
	08	I02A I02B I02C
		I12A I12B I12C
		I20A I20B I20C
		I20D I20E I20F
		I20G
	21B	X04Z
	Prä	B61B B61C B61D
81.96.6B↔		BORP MBOR VAC
		VAC I VAC II VBOR
	01	B03A B03B B03C
	04	E36A E36B
	06	G12A G16A G38A
		G38B
	08	I02A I02B I02C
		I12A I12B I12C
		I20A I20B I20C
		I20D I20E I20F
		I20G
	21B	X04Z
	Prä	B61B B61C B61D
81.96.6C↔		BORP MBOR VAC
		VAC I VAC II VBOR
	01	B03A B03B B03C
	04	E36A E36B
	06	G12A G16A G38A
		G38B
	08	I02A I02B I02C
		I12A I12B I12C
		I20A I20B I20C
		I20D I20E I20F
		I20G
	21B	X04Z
	Prä	B61B B61C B61D
81.96.6D↔		BORP MBOR VAC
		VAC I VAC II VBOR
	01	B03A B03B B03C
	04	E36A E36B
	06	G12A G16A G38A
		G38B
	08	I02A I02B I02C
		I12A I12B I12C
		I20A I20B I20C
		I20D I20E I20F
		I20G
	21B	X04Z
	Prä	B61B B61C B61D
81.96.71↔		BORP MBOR VAC
		VAC I VAC II VBOR
	01	B03A B03B B03C
	04	E36A E36B
	06	G12A G16A G38A
		G38B
	08	I02A I02B I02C
		I12A I12B I12C
		I20A I20B I20C
		I20D I20E I20F
		I20G
	21B	X04Z
	Prä	B61B B61C B61D
81.96.72↔		BORP MBOR VAC
		VAC I VAC II VBOR
	01	B03A B03B B03C
	04	E36A E36B
	06	G12A G16A G38A
		G38B
	08	I02A I02B I02C
		I12A I12B I12C
		I20A I20B I20C
		I20D I20E I20F
		I20G
	21B	X04Z
	Prä	B61B B61C B61D
81.96.79↔		BORP MBOR VAC
		VAC I VAC II VBOR
	01	B03A B03B B03C
	04	E36A E36B
	06	G12A G16A G38A
		G38B
	08	I02A I02B I02C
		I12A I12B I12C
		I20A I20B I20C
		I20D I20E I20F
		I20G
	21B	X04Z
	Prä	B61B B61C B61D
81.96.7A↔		BORP MBOR VAC
		VAC I VAC II VBOR
	01	B03A B03B B03C
	04	E36A E36B
	06	G12A G16A G38A
		G38B
	08	I02A I02B I02C
		I12A I12B I12C
		I20A I20B I20C
		I20D I20E I20F
		I20G
	21B	X04Z
	Prä	B61B B61C B61D
81.96.7B↔		BORP MBOR VAC
		VAC I VAC II VBOR
	01	B03A B03B B03C
	04	E36A E36B
	06	G12A G16A G38A
		G38B
	08	I02A I02B I02C
		I12A I12B I12C
		I20A I20B I20C
		I20D I20E I20F
		I20G
	21B	X04Z
	Prä	B61B B61C B61D
81.96.7C↔		BORP MBOR VAC
		VAC I VAC II VBOR
	01	B03A B03B B03C
	04	E36A E36B
	06	G12A G16A G38A
		G38B
	08	I02A I02B I02C
		I12A I12B I12C
		I20A I20B I20C
		I20D I20E I20F
		I20G
	21B	X04Z
	Prä	B61B B61C B61D
81.96.7D↔		BORP MBOR VAC
		VAC I VAC II VBOR
	01	B03A B03B B03C
	04	E36A E36B
	06	G12A G16A G38A
		G38B
	08	I02A I02B I02C
		I12A I12B I12C
		I20A I20B I20C
		I20D I20E I20F
		I20G
	21B	X04Z
	Prä	B61B B61C B61D
81.96.80↔		BORP MBOR VAC
		VBOR
	01	B03A B03B B03C
	04	E36A E36B
	06	G12A G16A G38A
		G38B
	08	I02A I02B I02C
		I12A I12B I12C
		I27A I27B I27C
		I27D I28A I28B
	21B	X04Z X05Z X06A
		X06B X06C
	Prä	B61B B61C B61D
81.96.81↔		BORP MBOR VAC
		VBOR
	01	B03A B03B B03C
	04	E36A E36B
	06	G12A G16A G38A
		G38B
	08	I02A I02B I02C
		I12A I12B I12C
		I27A I27B I27C
		I27D I28A I28B
	21B	X04Z X05Z X06A
		X06B X06C
	Prä	B61B B61C B61D
81.96.82↔		BORP MBOR VAC
		VBOR
	01	B03A B03B B03C
	04	E36A E36B
	06	G12A G16A G38A
		G38B
	08	I02A I02B I02C
		I12A I12B I12C
		I27A I27B I27C
		I27D I28A I28B
	21B	X04Z X05Z X06A
		X06B X06C
	Prä	B61B B61C B61D
81.96.89↔		BORP MBOR VAC
		VBOR
	01	B03A B03B B03C
	04	E36A E36B
	06	G12A G16A G38A
		G38B
	08	I02A I02B I02C
		I12A I12B I12C
		I27A I27B I27C
		I27D I28A I28B
	21B	X04Z X05Z X06A
		X06B X06C
	Prä	B61B B61C B61D
81.96.8A↔		BORP MBOR VAC
		VBOR
	01	B03A B03B B03C
	04	E36A E36B
	06	G12A G16A G38A
		G38B
	08	I02A I02B I02C
		I12A I12B I12C
		I27A I27B I27C
		I27D I28A I28B
	21B	X04Z X05Z X06A
		X06B X06C

CHOP	MDC	DRG
	Prä	B61B B61C B61D
81.96.8B↔		BORP MBOR VAC VBOR
	01	B03A B03B B03C
	04	E36A E36B
	06	G12A G16A G38A G38B
	08	I02A I02B I02C I12A I12B I12C I27A I27B I27C I27D I28A I28B
	21B	X04Z X05Z X06A X06B X06C
	Prä	B61B B61C B61D
81.96.8C↔		BORP MBOR VAC VBOR
	01	B03A B03B B03C
	04	E36A E36B
	06	G12A G16A G38A G38B
	08	I02A I02B I02C I12A I12B I12C I27A I27B I27C I27D I28A I28B
	21B	X04Z X05Z X06A X06B X06C
	Prä	B61B B61C B61D
81.96.8D↔		BORP MBOR VAC VBOR
	01	B03A B03B B03C
	04	E36A E36B
	06	G12A G16A G38A G38B
	08	I02A I02B I02C I12A I12B I12C I27A I27B I27C I27D I28A I28B
	21B	X04Z X05Z X06A X06B X06C
	Prä	B61B B61C B61D
81.96.92↔		BORP MBOR VAC VBOR
	01	B03A B03B B03C
	04	E36A E36B
	06	G12A G16A G38A G38B
	08	I02A I02B I02C I12A I12B I12C I27A I27B I27C I27D I28A I28B
	21B	X04Z X05Z X06A X06B X06C
	Prä	B61B B61C B61D
81.96.93↔		BORP MBOR VAC VAC I VAC II VBOR
	04	E36A E36B
	06	G12A G16A G38A G38B
	08	I02A I02B I02C I12A I12B I12C I18A I18B I18C
	21B	X04Z
	Prä	B61B B61C B61D
81.96.94↔		BORP MBOR VAC VAC I VAC II VBOR
	04	E36A E36B
	06	G12A G16A G38A G38B
	08	I02A I02B I02C I12A I12B I12C I18A I18B I18C
	21B	X04Z
	Prä	B61B B61C B61D
81.96.95↔		BORP MBOR VAC VAC I VAC II VBOR
	01	B03A B03B B03C
	04	E36A E36B
	06	G12A G16A G38A G38B
	08	I02A I02B I02C I28A I28B I28C I32A I32B I32C
	21B	X05Z
81.96.97↔		BORP MBOR VAC VAC I VAC II VBOR
	01	B03A B03B B03C
	04	E36A E36B
	06	G12A G16A G38A G38B
	08	I02A I02B I02C I12A I12B I12C I27A I27B I27C I27D I28A I28B
	21B	X04Z X05Z X06A X06B X06C
	Prä	B61B B61C B61D
81.96.98↔		BORP MBOR VAC VAC I VAC II VBOR
	01	B03A B03B B03C
	04	E36A E36B
	06	G12A G16A G38A G38B
	08	I02A I02B I02C I32A I32B I32C I32D I32E I32F
	21B	X05Z
81.96.9A↔		BORP MBOR VAC VAC I VAC II VBOR
	01	B03A B03B B03C
	04	E36A E36B
	05	F04Z F13A F13B F13C
	06	G12A G16A G38A G38B
	08	I02A I02B I02C I12A I12B I12C I20A I20B I20C I20D I20E I20F I20G
	21B	X04Z
	Prä	B61B B61C B61D
81.96.9B↔		BORP MBOR VAC VAC I VAC II VBOR
	01	B03A B03B B03C
	04	E36A E36B
	06	G12A G16A G38A G38B
	08	I02A I02B I02C I12A I12B I12C I27A I27B I27C I27D I28A I28B
	21B	X04Z X05Z X06A X06B X06C
	Prä	B61B B61C B61D
81.97.10↔		BORP MBOR VAC VAC I VAC II VBOR
	04	E36A E36B
	06	G12A G16A G38A G38B
	08	I28A I28B I28C
	21B	X06A X06B X06C
81.97.13↔		BORP KORP MBOR MKOR VAC VAC I VAC II VBOR VKOR
	04	E36A E36B
	06	G12A G16A G38A G38B
	08	I05A I05B
	21B	X06A X06B X06C
81.97.14↔		BORP KORP MBOR MKOR VAC VAC I VAC II VBOR VKOR
	04	E36A E36B
	06	G12A G16A G38A G38B
	08	I05A I05B I05C
	21B	X05Z
81.97.15↔		BORP KORP MBOR MKOR VAC VAC I VAC II VBOR VKOR
	04	E36A E36B
	06	G12A G16A G38A G38B
	08	I02A I02B I02C I08A I08B I32A I32B I32C I32E I32F
	21B	X05Z
81.97.16↔		BORP KORP MBOR MKOR VAC VAC I VAC II VBOR VKOR
	04	E36A E36B
	06	G12A G16A G38A G38B
	08	I02A I02B I02C I08A I08B I32A I32B I32C I32E I32F
	21B	X05Z
81.97.17↔		BORP KORP MBOR MKOR VAC VAC I VAC II VBOR VKOR
	04	E36A E36B
	06	G12A G16A G38A G38B
	08	I02A I02B I02C I08A I08B I32A I32B I32C I32E I32F
	21B	X05Z
81.97.21↔		BORP MBOR VAC VAC I VAC II VBOR
	04	E36A E36B
	06	G12A G16A G38A G38B
	08	I28A I28B I28C
	21B	X06A X06B X06C
81.97.22↔		BORP MBOR VAC VAC I VAC II VBOR
	04	E36A E36B
	06	G12A G16A G38A G38B
	08	I28A I28B I28C
	21B	X06A X06B X06C
81.99.00↔	08	I28A I28B
	21B	X06A X06B X06C
81.99.11↔		BORP EML MBOR VAC VAC I VAC II VBOR
	04	E36A E36B

PROC

PROC

CHOP	MDC	DRG
	06	G12A G16A G38A G38B
	08	I02A I02B I02C I12A I12B I12C I29A I29B I29C
	21B	X06A X06B X06C
	Prä	B61B B61C B61D
81.99.12↔		BORP EML MBOR VAC VAC I VAC II VBOR
	04	E36A E36B
	06	G12A G16A G38A G38B
	08	I02A I02B I02C I12A I12B I12C I29A I29B I29C
	21B	X06A X06B X06C
	Prä	B61B B61C B61D
81.99.13↔		BORP EML MBOR VAC VAC I VAC II VBOR
	04	E36A E36B
	06	G12A G16A G38A G38B
	08	I02A I02B I02C I12A I12B I12C I29A I29B I29C
	21B	X06A X06B X06C
	Prä	B61B B61C B61D
81.99.14↔		BORP EML MBOR VAC VAC I VAC II VBOR
	04	E36A E36B
	06	G12A G16A G38A G38B
	08	I02A I02B I02C I12A I12B I12C I31A I31B
	21B	X06A X06B X06C
	Prä	B61B B61C B61D
81.99.15↔		BORP EML MBOR VAC VAC I VAC II VBOR
	04	E36A E36B
	06	G12A G16A G38A G38B
	08	I02A I02B I02C I12A I12B I12C I32A I32B I32C I32D I32E I32F
	21B	X05Z
	Prä	B61B B61C B61D
81.99.16↔		BORP EML MBOR VAC VAC I VAC II VBOR
	04	E36A E36B
	06	G12A G16A G38A G38B
	08	I02A I02B I02C I12A I12B I12C I28A I28B I28C
	21B	X04Z
	Prä	B61B B61C B61D
81.99.17↔		BORP EML MBOR VAC VAC I VAC II VBOR
	04	E36A E36B
	06	G12A G16A G38A G38B
	08	I02A I02B I02C I12A I12B I12C I28A I28B I28C
	21B	X04Z
	Prä	B61B B61C B61D
81.99.18↔		BORP EML MBOR VAC VAC I VAC II VBOR
	04	E36A E36B
	06	G12A G16A G38A G38B
	08	I02A I02B I02C I12A I12B I12C I28A I28B I28C
	21B	X04Z
	Prä	B61B B61C B61D
81.99.19↔	Prä	B61B B61C B61D
	08	I02A I02B I02C I12A I12B I12C I28A I28B
	21B	X06A X06B X06C
81.99.1A↔		BORP EML MBOR VAC VAC I VAC II VBOR
	04	E36A E36B
	06	G12A G16A G38A G38B
	08	I02A I02B I02C I12A I12B I12C I18A I18B I18C I30A I30B I30C
	21B	X04Z X06A X06B X06C
	Prä	B61B B61C B61D
81.99.1B↔		BORP EML MBOR VAC VAC I VAC II VBOR
	04	E36A E36B
	06	G12A G16A G38A G38B
	08	I02A I02B I02C I12A I12B I12C I18A I18B I18C I30A I30B I30C
	21B	X04Z X06A X06B X06C
	Prä	B61B B61C B61D
81.99.1C↔		BORP EML MBOR VAC VAC I VAC II VBOR
	04	E36A E36B
	06	G12A G16A G38A G38B
	08	I02A I02B I02C I12A I12B I12C I20A I20B I20C I20D I20E I20F I20G I28B
	21B	X04Z
	Prä	B61B B61C B61D
81.99.1D↔		BORP EML MBOR VAC VAC I VAC II VBOR
	04	E36A E36B
	06	G12A G16A G38A G38B
	08	I02A I02B I02C I12A I12B I12C I20A I20B I20C I20D I20E I20F I20G I28B
	21B	X04Z
	Prä	B61B B61C B61D
81.99.1E↔		BORP EML MBOR VAC VAC I VAC II VBOR
	04	E36A E36B
	06	G12A G16A G38A G38B
	08	I02A I02B I02C I12A I12B I12C I20A I20B I20C I20D I20E I20F I20G
	21B	X04Z
	Prä	B61B B61C B61D
81.99.1F↔		BORP EML MBOR VAC VAC I VAC II VBOR
	04	E36A E36B
	06	G12A G16A G38A G38B
	08	I02A I02B I02C I12A I12B I12C I20A I20B I20C I20D I20E I20F I20G
	21B	X04Z
	Prä	B61B B61C B61D
81.99.1G↔		BORP EML MBOR VAC VAC I VAC II VBOR
	04	E36A E36B
	06	G12A G16A G38A G38B
	08	I02A I02B I02C I12A I12B I12C I20A I20B I20C I20D I20E I20F I20G
	21B	X04Z
	Prä	B61B B61C B61D
81.99.21↔		BORP EML MBOR VAC VAC I VAC II VBOR
	04	E36A E36B
	06	G12A G16A G38A G38B
	08	I02A I02B I02C I12A I12B I12C I29A I29B I29C
	21B	X06A X06B X06C
	Prä	B61B B61C B61D
81.99.22↔		BORP EML MBOR VAC VAC I VAC II VBOR
	04	E36A E36B
	06	G12A G16A G38A G38B
	08	I02A I02B I02C I12A I12B I12C I29A I29B I29C
	21B	X06A X06B X06C
	Prä	B61B B61C B61D
81.99.23↔		BORP EML MBOR VAC VAC I VAC II VBOR
	04	E36A E36B
	06	G12A G16A G38A G38B
	08	I02A I02B I02C

CHOP	MDC	DRG
		I12A I12B I12C I29A I29B I29C
	21B	X06A X06B X06C
	Prä	B61B B61C B61D
81.99.24↔		BORP EML MBOR VAC VAC I VAC II VBOR
	04	E36A E36B
	06	G12A G16A G38A G38B
	08	I02A I02B I02C I12A I12B I12C I31A I31B
	21B	X06A X06B X06C
	Prä	B61B B61C B61D
81.99.25↔		BORP EML MBOR VAC VAC I VAC II VBOR
	04	E36A E36B
	06	G12A G16A G38A G38B
	08	I02A I02B I02C I12A I12B I12C I32A I32B I32C I32D I32E I32F
	21B	X05Z
	Prä	B61B B61C B61D
81.99.26↔		BORP EML MBOR VAC VAC I VAC II VBOR
	04	E36A E36B
	06	G12A G16A G38A G38B
	08	I02A I02B I02C I12A I12B I12C I28A I28B I28C
	21B	X04Z
	Prä	B61B B61C B61D
81.99.27↔		BORP EML MBOR VAC VAC I VAC II VBOR
	04	E36A E36B
	06	G12A G16A G38A G38B
	08	I02A I02B I02C I12A I12B I12C I28A I28B I28C
	21B	X04Z
	Prä	B61B B61C B61D
81.99.28↔		BORP EML MBOR VAC VAC I VAC II VBOR
	04	E36A E36B
	06	G12A G16A G38A G38B
	08	I02A I02B I02C I12A I12B I12C I28A I28B I28C
	21B	X04Z
	Prä	B61B B61C B61D
81.99.29↔		BORP EML MBOR VAC VAC I VAC II VBOR
	04	E36A E36B
	06	G12A G16A G38A G38B
	08	I02A I02B I02C I12A I12B I12C I28A I28B I28C
	21B	X04Z
	Prä	B61B B61C B61D
81.99.2A↔		BORP EML MBOR VAC VAC I VAC II VBOR
	04	E36A E36B
	06	G12A G16A G38A G38B
	08	I02A I02B I02C I12A I12B I12C I18A I18B I18C I30A I30B I30C
	21B	X04Z X06A X06B X06C
	Prä	B61B B61C B61D
81.99.2B↔		BORP EML MBOR VAC VAC I VAC II VBOR
	04	E36A E36B
	06	G12A G16A G38A G38B
	08	I02A I02B I02C I12A I12B I12C I18A I18B I18C I30A I30B I30C
	21B	X04Z X06A X06B X06C
	Prä	B61B B61C B61D
81.99.2C↔		BORP EML MBOR VAC VAC I VAC II VBOR
	04	E36A E36B
	06	G12A G16A G38A G38B
	08	I02A I02B I02C I12A I12B I12C I20A I20B I20C I20D I20E I20F I20G I28B
	21B	X04Z
	Prä	B61B B61C B61D
81.99.2D↔		BORP EML MBOR VAC VAC I VAC II VBOR
	04	E36A E36B
	06	G12A G16A G38A G38B
	08	I02A I02B I02C I12A I12B I12C I20A I20B I20C I20D I20E I20F I20G I28B
	21B	X04Z
	Prä	B61B B61C B61D
81.99.2E↔		BORP EML MBOR VAC VAC I VAC II VBOR
	04	E36A E36B
	06	G12A G16A G38A G38B
	08	I02A I02B I02C I12A I12B I12C I20A I20B I20C I20D I20E I20F I20G
	21B	X04Z
	Prä	B61B B61C B61D
81.99.2F↔		BORP EML MBOR VAC VAC I VAC II VBOR
	04	E36A E36B
	06	G12A G16A G38A G38B
	08	I02A I02B I02C I12A I12B I12C I20A I20B I20C I20D I20E I20F I20G
	21B	X04Z
	Prä	B61B B61C B61D
81.99.2G↔		BORP EML MBOR VAC VAC I VAC II VBOR
	04	E36A E36B
	06	G12A G16A G38A G38B
	08	I02A I02B I02C I12A I12B I12C I20A I20B I20C I20D I20E I20F I20G
	21B	X04Z
	Prä	B61B B61C B61D
81.99.30↔	08	I28A I28B
	21B	X06A X06B X06C
81.99.31↔		BORP EML MBOR VAC VAC I VAC II VBOR
	04	E36A E36B
	06	G12A G16A G38A G38B
	08	I29A I29B I29C
	21B	X06A X06B X06C
81.99.32↔		BORP EML MBOR VAC VAC I VAC II VBOR
	04	E36A E36B
	06	G12A G16A G38A G38B
	08	I29A I29B I29C
	21B	X06A X06B X06C
81.99.33↔		BORP EML MBOR VAC VAC I VAC II VBOR
	04	E36A E36B
	06	G12A G16A G38A G38B
	08	I29A I29B I29C
	21B	X06A X06B X06C
81.99.34↔		BORP EML MBOR VAC VAC I VAC II VBOR
	04	E36A E36B
	06	G12A G16A G38A G38B
	08	I31A I31B
	21B	X06A X06B X06C
81.99.35↔		BORP EML MBOR VAC VAC I VAC II VBOR
	04	E36A E36B
	06	G12A G16A G38A G38B
	08	I02A I02B I02C I32A I32B I32C I32D I32E I32F
	21B	X05Z
81.99.36↔		BORP EML MBOR VAC VAC I VAC II VBOR
	04	E36A E36B

PROC

PROC

CHOP	MDC	DRG
	06	G12A G16A G38A G38B
	08	I28A I28B I28C
	21B	X04Z
81.99.37↔		BORP EML MBOR VAC VAC I VAC II VBOR
	04	E36A E36B
	06	G12A G16A G38A G38B
	08	I28A I28B I28C
	21B	X04Z
81.99.38↔		BORP EML MBOR VAC VAC I VAC II VBOR
	04	E36A E36B
	06	G12A G16A G38A G38B
	08	I28A I28B I28C
	21B	X04Z
81.99.39↔	08	I28A I28B
	21B	X06A X06B X06C
81.99.3A↔		BORP EML MBOR VAC VAC I VAC II VBOR
	04	E36A E36B
	06	G12A G16A G38A G38B
	08	I18A I18B I18C I30A I30B I30C
	21B	X04Z X06A X06B X06C
81.99.3B↔		BORP EML MBOR VAC VAC I VAC II VBOR
	04	E36A E36B
	06	G12A G16A G38A G38B
	08	I18A I18B I18C I30A I30B I30C
	21B	X04Z X06A X06B X06C
81.99.3C↔		BORP EML MBOR VAC VAC I VAC II VBOR
	04	E36A E36B
	06	G12A G16A G38A G38B
	08	I20A I20B I20C I20D I20E I20F I20G I28B
	21B	X04Z
81.99.3D↔		BORP EML MBOR VAC VAC I VAC II VBOR
	04	E36A E36B
	06	G12A G16A G38A G38B
	08	I20A I20B I20C I20D I20E I20F I20G I28B
	21B	X04Z
81.99.3E↔		BORP EML MBOR VAC VAC I VAC II VBOR
	04	E36A E36B
	06	G12A G16A G38A G38B
	08	I20A I20B I20C I20D I20E I20F I20G
	21B	X04Z
81.99.3F↔		BORP EML MBOR VAC VAC I VAC II VBOR
	04	E36A E36B
	06	G12A G16A G38A G38B
	08	I20A I20B I20C I20D I20E I20F I20G
	21B	X04Z
81.99.3G↔		BORP EML MBOR VAC VAC I VAC II VBOR
	04	E36A E36B
	06	G12A G16A G38A G38B
	08	I20A I20B I20C I20D I20E I20F I20G
	21B	X04Z
81.99.40↔	08	I28A I28B
	21B	X06A X06B X06C
81.99.41↔		BORP EML MBOR VAC VAC I VAC II VBOR
	04	E36A E36B
	06	G12A G16A G38A G38B
	08	I29A I29B I29C
	21B	X06A X06B X06C
81.99.42↔		BORP EML MBOR VAC VAC I VAC II VBOR
	04	E36A E36B
	06	G12A G16A G38A G38B
	08	I29A I29B I29C
	21B	X06A X06B X06C
81.99.43↔		BORP EML MBOR VAC VAC I VAC II VBOR
	04	E36A E36B
	06	G12A G16A G38A G38B
	08	I29A I29B I29C
	21B	X06A X06B X06C
81.99.44↔		BORP EML MBOR VAC VAC I VAC II VBOR
	04	E36A E36B
	06	G12A G16A G38A G38B
	08	I31A I31B
	21B	X06A X06B X06C
81.99.45↔		BORP EML MBOR VAC VAC I VAC II VBOR
	04	E36A E36B
	06	G12A G16A G38A G38B
	08	I02A I02B I02C I32A I32B I32C I32D I32E I32F
	21B	X05Z
81.99.46↔		BORP EML MBOR VAC VAC I VAC II VBOR
	04	E36A E36B
	06	G12A G16A G38A G38B
	08	I28A I28B I28C
	21B	X04Z
81.99.47↔		BORP EML MBOR VAC VAC I VAC II VBOR
	04	E36A E36B
	06	G12A G16A G38A G38B
	08	I28A I28B I28C
	21B	X04Z
81.99.48↔		BORP EML MBOR VAC VAC I VAC II VBOR
	04	E36A E36B
	06	G12A G16A G38A G38B
	08	I28A I28B I28C
	21B	X04Z
81.99.49↔		BORP EML MBOR VAC VAC I VAC II VBOR
	04	E36A E36B
	06	G12A G16A G38A G38B
	08	I28A I28B I28C
	21B	X04Z
81.99.4A↔		BORP EML MBOR VAC VAC I VAC II VBOR
	04	E36A E36B
	06	G12A G16A G38A G38B
	08	I18A I18B I18C I30A I30B I30C
	21B	X04Z X06A X06B X06C
81.99.4B↔		BORP EML MBOR VAC VAC I VAC II VBOR
	04	E36A E36B
	06	G12A G16A G38A G38B
	08	I18A I18B I18C I30A I30B I30C
	21B	X04Z X06A X06B X06C
81.99.4C↔		BORP EML MBOR VAC VAC I VAC II VBOR
	04	E36A E36B
	06	G12A G16A G38A G38B
	08	I20A I20B I20C I20D I20E I20F I20G
	21B	X04Z
81.99.4D↔		BORP EML MBOR VAC VAC I VAC II VBOR
	04	E36A E36B
	06	G12A G16A G38A G38B
	08	I20A I20B I20C I20D I20E I20F I20G
	21B	X04Z
81.99.4E↔		BORP EML MBOR VAC VAC I VAC II

CHOP	MDC	DRG
		VBOR
	04	E36A E36B
	06	G12A G16A G38A G38B
	08	I20A I20B I20C I20D I20E I20F I20G I28B
	21B	X04Z
81.99.4F↔		BORP EML MBOR VAC VAC I VAC II VBOR
	04	E36A E36B
	06	G12A G16A G38A G38B
	08	I20A I20B I20C I20D I20E I20F I20G I28B
	21B	X04Z
81.99.4G↔		BORP EML MBOR VAC VAC I VAC II VBOR
	04	E36A E36B
	06	G12A G16A G38A G38B
	08	I20A I20B I20C I20D I20E I20F I20G I28B
	21B	X04Z
81.99.50↔	08	I28A I28B
	21B	X06A X06B X06C
81.99.51↔		BORP EML MBOR VAC VAC I VAC II VBOR
	04	E36A E36B
	06	G12A G16A G38A G38B
	08	I29A I29B I29C
	21B	X06A X06B X06C
81.99.52↔		BORP EML MBOR VAC VAC I VAC II VBOR
	04	E36A E36B
	06	G12A G16A G38A G38B
	08	I29A I29B I29C
	21B	X06A X06B X06C
81.99.53↔		BORP EML MBOR VAC VAC I VAC II VBOR
	04	E36A E36B
	06	G12A G16A G38A G38B
	08	I29A I29B I29C
	21B	X06A X06B X06C
81.99.54↔		BORP EML MBOR VAC VAC I VAC II VBOR
	04	E36A E36B
	06	G12A G16A G38A G38B
	08	I31A I31B
	21B	X06A X06B X06C
81.99.55↔		BORP EML MBOR VAC VAC I VAC II VBOR
	04	E36A E36B
	06	G12A G16A G38A G38B
	08	I02A I02B I02C I32A I32B I32C I32D I32E I32F
	21B	X06A X06B X06C
81.99.56↔		BORP EML MBOR VAC VAC I VAC II VBOR
	04	E36A E36B
	06	G12A G16A G38A G38B
	08	I28A I28B I28C
	21B	X04Z
81.99.57↔		BORP EML MBOR VAC VAC I VAC II VBOR
	04	E36A E36B
	06	G12A G16A G38A G38B
	08	I28A I28B I28C
	21B	X04Z
81.99.58↔		BORP EML MBOR VAC VAC I VAC II VBOR
	04	E36A E36B
	06	G12A G16A G38A G38B
	08	I28A I28B I28C
	21B	X04Z
81.99.59↔	08	I28A I28B
	21B	X06A X06B X06C
81.99.5A↔		BORP EML MBOR VAC VAC I VAC II VBOR
	04	E36A E36B
	06	G12A G16A G38A G38B
	08	I18A I18B I18C I30A I30B I30C
	21B	X04Z X06A X06B X06C
81.99.5B↔		BORP EML MBOR VAC VAC I VAC II VBOR
	04	E36A E36B
	06	G12A G16A G38A G38B
	08	I18A I18B I18C I30A I30B I30C
	21B	X04Z X06A X06B X06C
81.99.5C↔		BORP EML MBOR VAC VAC I VAC II VBOR
	04	E36A E36B
	06	G12A G16A G38A G38B
	08	I20A I20B I20C I20D I20E I20F I20G I28B
	21B	X04Z
81.99.5D↔		BORP EML MBOR VAC VAC I VAC II VBOR
	04	E36A E36B
	06	G12A G16A G38A G38B
	08	I20A I20B I20C I20D I20E I20F I20G I28B
	21B	X04Z
81.99.5E↔		BORP EML MBOR VAC VAC I VAC II VBOR
	04	E36A E36B
	06	G12A G16A G38A G38B
	08	I20A I20B I20C I20D I20E I20F I20G
	21B	X04Z
81.99.5F↔		BORP EML MBOR VAC VAC I VAC II VBOR
	04	E36A E36B
	06	G12A G16A G38A G38B
	08	I20A I20B I20C I20D I20E I20F I20G
	21B	X04Z
81.99.5G↔		BORP EML MBOR VAC VAC I VAC II VBOR
	04	E36A E36B
	06	G12A G16A G38A G38B
	08	I20A I20B I20C I20D I20E I20F I20G
	21B	X04Z
81.99.80↔	08	I28A I28B
	21B	X06A X06B X06C
81.99.81↔		BORP EML MBOR VAC VAC I VAC II VBOR
	04	E36A E36B
	06	G12A G16A G38A G38B
	08	I02A I02B I02C I32A I32B I32C I32D I32E I32F
	21B	X05Z
81.99.82↔		BORP EML MBOR VAC VAC I VAC II VBOR
	04	E36A E36B
	06	G12A G16A G38A G38B
	08	I18A I18B I18C I30A I30B I30C
	21B	X04Z X06A X06B X06C
81.99.83↔		BORP EML MBOR VAC VAC I VAC II VBOR
	04	E36A E36B
	06	G12A G16A G38A G38B
	08	I20A I20B I20C I20D I20E I20F I20G
	21B	X04Z
81.99.89↔	08	I28A I28B
	21B	X06A X06B X06C
81.99.90↔	08	I28A I28B
	21B	X06A X06B X06C
81.99.91↔		BORP EML MBOR VAC VAC I VAC II VBOR
	04	E36A E36B
	06	G12A G16A G38A G38B

PROC

PROC

CHOP	MDC	DRG
	08	I29A I29B I29C
	21B	X06A X06B X06C
81.99.92↔		BORP EML MBOR VAC VAC I VAC II VBOR
	04	E36A E36B
	06	G12A G16A G38A G38B
	08	I29A I29B I29C
	21B	X06A X06B X06C
81.99.93↔		BORP EML MBOR VAC VAC I VAC II VBOR
	04	E36A E36B
	06	G12A G16A G38A G38B
	08	I29A I29B I29C
	21B	X06A X06B X06C
81.99.94↔		BORP EML MBOR VAC VAC I VAC II VBOR
	04	E36A E36B
	06	G12A G16A G38A G38B
	08	I31A I31B
	21B	X06A X06B X06C
81.99.95↔		BORP EML MBOR VAC VAC I VAC II VBOR
	04	E36A E36B
	06	G12A G16A G38A G38B
	08	I31A I31B
	21B	X06A X06B X06C
81.99.96↔		BORP EML MBOR VAC VAC I VAC II VBOR
	04	E36A E36B
	06	G12A G16A G38A G38B
	08	I02A I02B I02C I32A I32B I32C I32D I32E I32F
	21B	X05Z
81.99.97↔		BORP EML MBOR VAC VAC I VAC II VBOR
	04	E36A E36B
	06	G12A G16A G38A G38B
	08	I28A I28B I28C
	21B	X04Z
81.99.98↔		BORP EML MBOR VAC VAC I VAC II VBOR
	04	E36A E36B
	06	G12A G16A G38A G38B
	08	I28A I28B I28C
	21B	X04Z
81.99.99↔	08	I28A I28B
	21B	X06A X06B X06C
81.99.9A↔		BORP EML MBOR VAC VAC I VAC II VBOR
	04	E36A E36B
	06	G12A G16A G38A G38B
	08	I18A I18B I18C I30A I30B I30C
	21B	X04Z X06A X06B X06C
81.99.9B↔		BORP EML MBOR VAC VAC I VAC II VBOR
	04	E36A E36B
	06	G12A G16A G38A G38B
	08	I20A I20B I20C I20D I20E I20F I20G
	21B	X04Z
81.99.9C↔		BORP EML MBOR VAC VAC I VAC II VBOR
	04	E36A E36B
	06	G12A G16A G38A G38B
	08	I20A I20B I20C I20D I20E I20F I20G
	21B	X04Z
81.99.9E↔		BORP EML MBOR VAC VAC I VAC II VBOR
	04	E36A E36B
	06	G12A G16A G38A G38B
	08	I20A I20B I20C I20D I20E I20F I20G
	21B	X04Z
81.99.9F↔		BORP EML MBOR VAC VAC I VAC II VBOR
	04	E36A E36B
	06	G12A G16A G38A G38B
	08	I20A I20B I20C I20D I20E I20F I20G
	21B	X04Z
81.99.9G↔		BORP EML MBOR VAC VAC I VAC II VBOR
	04	E36A E36B
	06	G12A G16A G38A G38B
	08	I20A I20B I20C I20D I20E I20F I20G
	21B	X04Z
81.9A.11↔		BORP EML MBOR VAC VAC I VAC II VBOR
	01	B03A B03B B03C
	04	E36A E36B
	05	F04Z F13A F13B F13C
	06	G12A G16A G38A G38B
	08	I02A I02B I02C I12A I12B I12C I29A I29B I29C
	10	K09A K09B
	21B	X06A X06B X06C
	Prä	B61B B61C B61D
81.9A.12↔		BORP EML MBOR VAC VAC I VAC II VBOR
	01	B03A B03B B03C
	04	E36A E36B
	05	F04Z F13A F13B F13C
	06	G12A G16A G38A G38B
	08	I02A I02B I02C I12A I12B I12C I29A I29B I29C
	10	K09A K09B
	21B	X06A X06B X06C
	Prä	B61B B61C B61D
81.9A.13↔		BORP MBOR VAC VAC I VAC II VBOR
	04	E36A E36B
	06	G12A G16A G38A G38B
	08	I02A I02B I02C I12A I12B I12C I29A I29B I29C
	21B	X06A X06B X06C
	Prä	B61B B61C B61D
81.9A.14↔		BORP EML MBOR VAC VAC I VAC II VBOR
	01	B03A B03B B03C
	04	E36A E36B
	06	G12A G16A G38A G38B
	08	I02A I02B I02C I12A I12B I12C I27A I27B I27C I27D I31A I31B
	21B	X06A X06B X06C
	Prä	B61B B61C B61D
81.9A.16↔		BORP MBOR VAC VAC I VAC II VBOR
	01	B03A B03B B03C
	04	E36A E36B
	06	G12A G16A G38A G38B
	08	I02A I02B I02C I32A I32B I32C I32D I32E I32F
	21B	X05Z
81.9A.1A↔		BORP MBOR VAC VAC I VAC II VBOR
	04	E36A E36B
	06	G12A G16A G38A G38B
	08	I27A I27B I27C I27D I28A I28B I28C
81.9A.1B↔		BORP EML MBOR VAC VAC I VAC II VBOR
	01	B03A B03B B03C
	04	E36A E36B
	06	G12A G16A G38A G38B
	08	I02A I02B I02C I08A I08B I08C I12A I12B I12C
	21B	X04Z X06A X06B X06C
	Prä	B61B B61C B61D
81.9A.1C↔		BORP EML MBOR VAC VAC I VAC II VBOR
	01	B03A B03B B03C

CHOP	MDC	DRG
	04	E36A E36B
	06	G12A G16A G38A G38B
	08	I18A I18B I18C I30A I30B I30C
	21B	X04Z
81.9A.1D↔		BORP MBOR VAC VAC I VAC II VBOR
	01	B03A B03B B03C
	04	E36A E36B
	06	G12A G16A G38A G38B
	08	I02A I02B I02C I12A I12B I12C I13A I13B I13C I13D I20A I20B I20C I20D I20E I20F I20G
	21B	X04Z
	Prä	B61B B61C B61D
81.9A.1E↔		BORP EML MBOR VAC VAC I VAC II VBOR
	01	B03A B03B B03C
	04	E36A E36B
	05	F04Z F13A F13B F13C
	06	G12A G16A G38A G38B
	08	I02A I02B I02C I12A I12B I12C I59Z
	21B	X04Z
	Prä	B61B B61C B61D
81.9A.1F↔		BORP EML MBOR VAC VAC I VAC II VBOR
	01	B03A B03B B03C
	04	E36A E36B
	05	F04Z F13A F13B F13C
	06	G12A G16A G38A G38B
	08	I02A I02B I02C I12A I12B I12C I59Z
	21B	X04Z
	Prä	B61B B61C B61D
81.9A.1G↔		BORP MBOR VAC VAC I VAC II VBOR
	01	B03A B03B B03C
	04	E36A E36B
	06	G12A G16A G38A G38B
	08	I02A I02B I02C I12A I12B I12C I20A I20B I20C I20D I20E I20F I20G
	21B	X04Z
	Prä	B61B B61C B61D
81.9A.1H↔		BORP MBOR VAC VAC I VAC II VBOR
	01	B03A B03B B03C
	04	E36A E36B
	06	G12A G16A G38A G38B
	08	I02A I02B I02C I12A I12B I12C I20A I20B I20C I20D I20E I20F I20G
	21B	X04Z
	Prä	B61B B61C B61D
81.9A.1I↔		BORP MBOR VAC VAC I VAC II VBOR
	01	B03A B03B B03C
	04	E36A E36B
	06	G12A G16A G38A G38B
	08	I02A I02B I02C I12A I12B I12C I20A I20B I20C I20D I20E I20F I20G
	21B	X04Z
	Prä	B61B B61C B61D
81.9A.1J↔		BORP MBOR VAC VBOR
	01	B03A B03B B03C
	04	E36A E36B
	06	G12A G16A G38A G38B
	08	I02A I02B I02C I12A I12B I12C I27A I27B I27C I27D I28A I28B
	21B	X04Z X05Z X06A X06B X06C
	Prä	B61B B61C B61D
81.9A.21↔		BORP EML MBOR VAC VAC I VAC II VBOR
	01	B03A B03B B03C
	04	E36A E36B
	05	F04Z F13A F13B F13C
	06	G12A G16A G38A G38B
	08	I02A I02B I02C I12A I12B I12C I29A I29B I29C
	10	K09A K09B
	21B	X06A X06B X06C
	Prä	B61B B61C B61D
81.9A.22↔		BORP EML MBOR VAC VAC I VAC II VBOR
	01	B03A B03B B03C
	04	E36A E36B
	05	F04Z F13A F13B F13C
	06	G12A G16A G38A G38B
	08	I02A I02B I02C I12A I12B I12C I29A I29B I29C
	10	K09A K09B
	21B	X06A X06B X06C
	Prä	B61B B61C B61D
81.9A.23↔		BORP MBOR VAC VAC I VAC II VBOR
	04	E36A E36B
	06	G12A G16A G38A G38B
	08	I02A I02B I02C I12A I12B I12C I29A I29B I29C
	21B	X06A X06B X06C
	Prä	B61B B61C B61D
81.9A.24↔		BORP EML MBOR VAC VAC I VAC II VBOR
	01	B03A B03B B03C
	04	E36A E36B
	06	G12A G16A G38A G38B
	08	I02A I02B I02C I12A I12B I12C I27A I27B I27C I27D I31A I31B
	21B	X06A X06B X06C
	Prä	B61B B61C B61D
81.9A.26↔		BORP MBOR VAC VAC I VAC II VBOR
	01	B03A B03B B03C
	04	E36A E36B
	06	G12A G16A G38A G38B
	08	I02A I02B I02C I32A I32B I32C I32D I32E I32F
	21B	X05Z
81.9A.2A↔		BORP MBOR VAC VAC I VAC II VBOR
	04	E36A E36B
	06	G12A G16A G38A G38B
	08	I27A I27B I27C I27D I28A I28B I28C
81.9A.2B↔		BORP EML MBOR VAC VAC I VAC II VBOR
	01	B03A B03B B03C
	04	E36A E36B
	06	G12A G16A G38A G38B
	08	I02A I02B I02C I08A I08B I08C I12A I12B I12C
	21B	X04Z X06A X06B X06C
	Prä	B61B B61C B61D
81.9A.2C↔		BORP EML MBOR VAC VAC I VAC II VBOR
	01	B03A B03B B03C
	04	E36A E36B
	06	G12A G16A G38A G38B
	08	I18A I18B I18C I30A I30B I30C
	21B	X04Z
81.9A.2D↔		BORP MBOR VAC VAC I VAC II VBOR
	01	B03A B03B B03C
	04	E36A E36B
	06	G12A G16A G38A G38B
	08	I02A I02B I02C I12A I12B I12C I13A I13B I13C I13D I20A I20B I20C I20D I20E I20F I20G
	21B	X04Z
	Prä	B61B B61C B61D
81.9A.2E↔		BORP EML MBOR VAC VAC I VAC II

PROC

PROC

CHOP	MDC	DRG
		VBOR
	01	B03A B03B B03C
	04	E36A E36B
	05	F04Z F13A F13B
		F13C
	06	G12A G16A G38A
		G38B
	08	I02A I02B I02C
		I12A I12B I12C
		I59Z
	21B	X04Z
	Prä	B61B B61C B61D
81.9A.2F↔		BORP EML MBOR
		VAC VAC I VAC II
		VBOR
	01	B03A B03B B03C
	04	E36A E36B
	05	F04Z F13A F13B
		F13C
	06	G12A G16A G38A
		G38B
	08	I02A I02B I02C
		I12A I12B I12C
		I59Z
	21B	X04Z
	Prä	B61B B61C B61D
81.9A.2G↔		BORP MBOR VAC
		VAC I VAC II VBOR
	01	B03A B03B B03C
	04	E36A E36B
	06	G12A G16A G38A
		G38B
	08	I02A I02B I02C
		I12A I12B I12C
		I20A I20B I20C
		I20D I20E I20F
		I20G
	21B	X04Z
	Prä	B61B B61C B61D
81.9A.2H↔		BORP MBOR VAC
		VAC I VAC II VBOR
	01	B03A B03B B03C
	04	E36A E36B
	06	G12A G16A G38A
		G38B
	08	I02A I02B I02C
		I12A I12B I12C
		I20A I20B I20C
		I20D I20E I20F
		I20G
	21B	X04Z
	Prä	B61B B61C B61D
81.9A.2I↔		BORP MBOR VAC
		VAC I VAC II VBOR
	01	B03A B03B B03C
	04	E36A E36B
	06	G12A G16A G38A
		G38B
	08	I02A I02B I02C
		I12A I12B I12C
		I20A I20B I20C
		I20D I20E I20F
		I20G
	21B	X04Z
	Prä	B61B B61C B61D
81.9A.2J↔		BORP MBOR VAC
		VBOR
	01	B03A B03B B03C
	04	E36A E36B
	06	G12A G16A G38A

CHOP	MDC	DRG
		G38B
	08	I02A I02B I02C
		I12A I12B I12C
		I27A I27B I27C
		I27D I28A I28B
	21B	X04Z X05Z X06A
		X06B X06C
	Prä	B61B B61C B61D
81.9A.31‡↔	01	B60A
	08	I18A I18C I30A
		I30B I30C
81.9A.32‡↔	01	B60A
	08	I18A I18C I30A
		I30B I30C
81.9A.33‡↔	01	B60A
	08	I18A I18C I30A
		I30B I30C
81.9A.34‡↔	01	B60A
	08	I18A I18C I30A
		I30B I30C
81.9A.36‡↔	01	B60A
	08	I18A I18C I30A
		I30B I30C
81.9A.3A‡↔	01	B60A
	08	I18A I18C I30A
		I30B I30C
81.9A.3B‡↔	01	B60A
	08	I18A I18C I30A
		I30B I30C
81.9A.3C‡↔	01	B60A
	08	I18A I18C I30A
		I30B I30C
81.9A.3D‡↔	01	B60A
	08	I18A I18C I30A
		I30B I30C
81.9A.3E‡↔	01	B60A
	08	I18A I18C I30A
		I30B I30C
81.9A.3F‡↔	01	B60A
	08	I18A I18C I30A
		I30B I30C
81.9A.3G‡↔	01	B60A
	08	I18A I18C I30A
		I30B I30C
81.9A.3H‡↔	01	B60A
	08	I18A I18C I30A
		I30B I30C
81.9A.3I‡↔	01	B60A
	08	I18A I18C I30A
		I30B I30C
81.9A.3J‡↔	01	B60A
	08	I18A I18C I30A
		I30B I30C
81.9A.41‡↔	01	B60A
	08	I18A I18C I30A
		I30B I30C
81.9A.42‡↔	01	B60A
	08	I18A I18C I30A
		I30B I30C
81.9A.43‡↔	01	B60A
	08	I18A I18C I30A
		I30B I30C
81.9A.44‡↔	01	B60A
	08	I18A I18C I30A
		I30B I30C
81.9A.46‡↔	01	B60A
	08	I18A I18C I30A
		I30B I30C
81.9A.4A‡↔	01	B60A
	08	I18A I18C I30A

CHOP	MDC	DRG
		I30B I30C
81.9A.4B‡↔	01	B60A
	08	I18A I18C I30A
		I30B I30C
81.9A.4C‡↔	01	B60A
	08	I18A I18C I30A
		I30B I30C
81.9A.4D‡↔	01	B60A
	08	I18A I18C I30A
		I30B I30C
81.9A.4E‡↔	01	B60A
	08	I18A I18C I30A
		I30B I30C
81.9A.4F‡↔	01	B60A
	08	I18A I18C I30A
		I30B I30C
81.9A.4G‡↔	01	B60A
	08	I18A I18C I30A
		I30B I30C
81.9A.4H‡↔	01	B60A
	08	I18A I18C I30A
		I30B I30C
81.9A.4I‡↔	01	B60A
	08	I18A I18C I30A
		I30B I30C
81.9A.4J‡↔	01	B60A
	08	I18A I18C I30A
		I30B I30C
81.9A.5C↔		BORP EML MBOR
		VAC VAC I VAC II
		VBOR
	01	B03A B03B B03C
	04	E36A E36B
	06	G12A G16A G38A
		G38B
	08	I18A I18B I18C
		I30A I30B I30C
	21B	X04Z
81.9A.6C↔		BORP EML MBOR
		VAC VAC I VAC II
		VBOR
	01	B03A B03B B03C
	04	E36A E36B
	06	G12A G16A G38A
		G38B
	08	I18A I18B I18C
		I30A I30B I30C
	21B	X04Z
81.A1.11‡↔		KORP
	01	B60A
	08	I95A I95B
	17	R01A
	Prä	A97A A97B
81.A1.12‡↔	Prä	A95A A95B B61B
		B61C
	01	B60A
	08	I04A I04B I43A
		I43B I46B
81.A1.13‡↔	Prä	A95A A95B B61B
		B61C
	01	B60A
	08	I04A I04B I43A
		I43B I46B
82.04↔		BORP EML MBOR
		VAC VBOR
	04	E36A E36B
	06	G12A G16A G38A
		G38B
	08	I02A I02B I02C
		I32A I32B I32C

CHOP	MDC	DRG
		I32D I32E I32F
	09	J02A J02B J03A J03B J04Z J11A J11B
	21B	X05Z
82.09.10↔		BORP EML MBOR VAC VBOR
	04	E36A E36B
	06	G12A G16A G38A G38B
	08	I02A I02B I02C I12A I12B I12C I32A I32B I32C I32D I32E I32F
	09	J02A J02B J03A J03B J04Z J11A J11B
	21B	X05Z
	Prä	B61B B61C B61D
82.11.10↔		BORP EML MBOR VAC VBOR
	04	E36A E36B
	06	G12A G16A G38A G38B
	08	I02A I02B I02C I12A I12B I12C I32A I32B I32C I32D I32E I32F
	09	J02A J02B J03A J03B J04Z J11A J11B
	21B	X05Z
	Prä	B61B B61C B61D
82.11.11↔		BORP EML MBOR VAC VBOR
	04	E36A E36B
	06	G12A G16A G38A G38B
	08	I02A I02B I02C I12A I12B I12C I32A I32B I32C I32D I32E I32F
	09	J02A J02B J03A J03B J04Z J11A J11B
	21B	X05Z
	Prä	B61B B61C B61D
82.11.20↔		BORP EML MBOR VAC VBOR
	04	E36A E36B
	06	G12A G16A G38A G38B
	08	I02A I02B I02C I12A I12B I12C I32A I32B I32C I32D I32E I32F
	09	J02A J02B J03A J03B J04Z J11A J11B
	21B	X05Z
	Prä	B61B B61C B61D
82.11.99↔		BORP EML MBOR VAC VBOR
	04	E36A E36B
	06	G12A G16A G38A G38B
	08	I02A I02B I02C I12A I12B I12C I32A I32B I32C I32D I32E I32F
	09	J02A J02B J03A J03B J04Z J11A J11B
	21B	X05Z
	Prä	B61B B61C B61D
82.12↔		BORP EML MBOR VAC VBOR
	01	B17A B17B
	04	E36A E36B
	06	G12A G16A G38A G38B
	08	I02A I02B I02C I32A I32B I32C I32D I32E I32F
	09	J02A J02B J03A J03B J04Z J11A J11B
	21B	X05Z
82.19.10↔		BORP EML MBOR VAC VBOR
	01	B05Z
	04	E36A E36B
	06	G12A G16A G38A G38B
	08	I02A I02B I02C I32A I32B I32C I32D I32E I32F
	09	J02A J02B J03A J03B J04Z J11A J11B
	21B	X05Z
82.19.99↔		BORP EML MBOR VAC VBOR
	01	B05Z
	04	E36A E36B
	06	G12A G16A G38A G38B
	08	I02A I02B I02C I32A I32B I32C I32D I32E I32F
	09	J02A J02B J03A J03B J04Z J11A J11B
	21B	X05Z
82.21↔		BORP EML MBOR VAC VBOR
	04	E36A E36B
	05	F04Z F13A F13B F13C
	06	G12A G16A G38A G38B
	08	I02A I02B I02C I32A I32B I32C I32D I32E I32F
	09	J02A J02B J03A J03B J04Z J11A J11B
	10	K09A K09B
	21B	X05Z
82.22↔		BORP EML MBOR VAC VBOR
	04	E36A E36B
	06	G12A G16A G38A G38B
	08	I02A I02B I02C I32A I32B I32C I32D I32E I32F
	09	J02A J02B J03A J03B J04Z J11A J11B
	21B	X05Z
82.31↔		BORP MBOR VAC VBOR
	01	B03A B03B B03C
	04	E36A E36B
	06	G12A G16A G38A G38B
	08	I02A I02B I02C I32A I32B I32C I32D I32E I32F
	21B	X05Z X06A X06B X06C
82.32↔		BORP MBOR VAC VBOR
	01	B17A B17B
	04	E36A E36B
	06	G12A G16A G38A G38B
	08	I02A I02B I02C I12A I12B I12C I32A I32B I32C I32D I32E I32F
	21B	X04Z X05Z X06A X06B X06C
	Prä	B61B B61C B61D
82.33↔	08	I02A I02B I02C I32A I32B I32C I32D I32E I32F
	09	J02A J02B J03A J03B J04Z J11A J11B
	21B	X05Z
82.34↔		BORP MBOR VAC VBOR
	01	B17A B17B
	04	E36A E36B
	06	G12A G16A G38A G38B
	08	I02A I02B I02C I12A I12B I12C I32A I32B I32C I32D I32E I32F
	21B	X04Z X05Z X06A X06B X06C
	Prä	B61B B61C B61D
82.35.10↔		BORP EML MBOR VAC VAC I VAC II VBOR
	01	B17A B17B
	04	E36A E36B
	06	G12A G16A G38A G38B
	08	I02A I02B I02C I32A I32B I32C I32D I32E I32F
	09	J02A J02B J03A J03B J04Z J11A J11B
	10	K09A K09B
	21B	X05Z
82.35.11↔		BORP EML MBOR VAC VAC I VAC II VBOR
	01	B17A B17B
	04	E36A E36B
	06	G12A G16A G38A G38B
	08	I02A I02B I02C I32A I32B I32C I32D I32E I32F

PROC

CHOP	MDC	DRG
	09	J02A J02B J03A J03B J04Z J11A J11B
	10	K09A K09B
	21B	X05Z
82.35.12↔		BORP EML MBOR VAC VAC I VAC II VBOR
	01	B17A B17B
	04	E36A E36B
	06	G12A G16A G38A G38B
	08	I02A I02B I02C I32A I32B I32C I32D I32E I32F
	09	J02A J02B J03A J03B J04Z J11A J11B
	10	K09A K09B
	21B	X05Z
82.35.13↔		BORP EML MBOR VAC VAC I VAC II VBOR
	01	B17A B17B
	04	E36A E36B
	06	G12A G16A G38A G38B
	08	I02A I02B I02C I32A I32B I32C I32D I32E I32F
	09	J02A J02B J03A J03B J04Z J11A J11B
	10	K09A K09B
	21B	X05Z
82.35.99↔		BORP EML MBOR VAC VAC I VAC II VBOR
	01	B17A B17B
	04	E36A E36B
	06	G12A G16A G38A G38B
	08	I02A I02B I02C I32A I32B I32C I32D I32E I32F
	09	J02A J02B J03A J03B J04Z J11A J11B
	10	K09A K09B
	21B	X05Z
82.36↔		BORP EML MBOR VAC VAC I VAC II VBOR
	04	E36A E36B
	06	G12A G16A G38A G38B
	08	I02A I02B I02C I32A I32B I32C I32D I32E I32F
	09	J02A J02B J03A J03B J04Z J11A J11B
	21B	X05Z
82.39.00↔	01	B17A B17B
	08	I02A I02B I02C I32A I32B I32C I32D I32E I32F
	09	J02A J02B J03A J03B J04Z J11A J11B
	21B	X05Z
82.39.10↔	01	B17A B17B
	08	I02A I02B I02C I32A I32B I32C I32D I32E I32F
	09	J02A J02B J03A J03B J04Z J11A J11B
	21B	X05Z
82.39.99↔	01	B17A B17B
	08	I02A I02B I02C I32A I32B I32C I32D I32E I32F
	09	J02A J02B J03A J03B J04Z J11A J11B
	21B	X05Z
82.41↔		BORP EML MBOR VAC VAC I VAC II VBOR
	04	E36A E36B
	06	G12A G16A G38A G38B
	08	I02A I02B I02C I32A I32B I32C I32D I32E I32F
	21B	X05Z
82.42↔		BORP EML MBOR VAC VAC I VAC II VBOR
	01	B03A B03B B03C
	04	E36A E36B
	06	G12A G16A G38A G38B
	08	I02A I02B I02C I12A I12B I12C I32A I32B I32C I32D I32E I32F
	21B	X05Z
	Prä	B61B B61C B61D
82.43↔		BORP EML MBOR VAC VAC I VAC II VBOR
	04	E36A E36B
	06	G12A G16A G38A G38B
	08	I02A I02B I02C I12A I12B I12C I32A I32B I32C I32D I32E I32F
	21B	X05Z
	Prä	B61B B61C B61D
82.44↔		BORP EML MBOR VAC VAC I VAC II VBOR
	04	E36A E36B
	06	G12A G16A G38A G38B
	08	I02A I02B I02C I12A I12B I12C I32A I32B I32C I32D I32E I32F
	21B	X05Z
	Prä	B61B B61C B61D
82.45↔		BORP EML MBOR VAC VAC I VAC II VBOR
	04	E36A E36B
	06	G12A G16A G38A G38B
	08	I02A I02B I02C I12A I12B I12C I32A I32B I32C I32D I32E I32F
	09	J02A J02B J03A J03B J04Z J11A J11B
	21B	X05Z
	Prä	B61B B61C B61D
82.46.10↔		BORP EML MBOR VAC VAC I VAC II VBOR
	01	B17A B17B
	04	E36A E36B
	05	F04Z F13A F13B F13C
	06	G12A G16A G38A G38B
	08	I02A I02B I02C I32A I32B I32C I32D I32E I32F
	09	J02A J02B J03A J03B J04Z J10A J10B J11A J11B
	10	K09A K09B
	21B	X05Z
82.46.20↔		BORP EML MBOR VAC VAC I VAC II VBOR
	01	B17A B17B
	04	E36A E36B
	05	F04Z F13A F13B F13C
	06	G12A G16A G38A G38B
	08	I02A I02B I02C I32A I32B I32C I32D I32E I32F
	09	J02A J02B J03A J03B J04Z J10A J10B J11A J11B
	10	K09A K09B
	21B	X05Z
82.46.99↔		BORP EML MBOR VAC VAC I VAC II VBOR
	01	B17A B17B
	04	E36A E36B
	05	F04Z F13A F13B F13C
	06	G12A G16A G38A G38B
	08	I02A I02B I02C I32A I32B I32C I32D I32E I32F
	09	J02A J02B J03A J03B J04Z J10A J10B J11A J11B
	10	K09A K09B
	21B	X05Z
82.51.11↔		BORP EML MBOR VAC VAC I VAC II VBOR
	01	B17A B17B
	04	E36A E36B
	06	G12A G16A G38A G38B
	08	I02A I02B I02C I12A I12B I12C I32A I32B I32C

CHOP	MDC	DRG
		I32D I32E I32F
	21B	X05Z X06A X06B
	Prä	B61B B61C B61D
82.51.12↔		BORP EML MBOR VAC VAC I VAC II VBOR
	01	B17A B17B
	04	E36A E36B
	06	G12A G16A G38A G38B
	08	I02A I02B I02C I32A I32B I32C I32D I32E I32F
	21B	X05Z
82.52.11↔		BORP EML MBOR VAC VAC I VAC II VBOR
	01	B17A B17B
	04	E36A E36B
	06	G12A G16A G38A G38B
	08	I02A I02B I02C I12A I12B I12C I32A I32B I32C I32D I32E I32F
	09	J02A J02B J03A J03B J04Z J11A J11B
	21B	X05Z
	Prä	B61B B61C B61D
82.52.12↔		BORP EML MBOR VAC VAC I VAC II VBOR
	01	B17A B17B
	04	E36A E36B
	06	G12A G16A G38A G38B
	08	I02A I02B I02C I32A I32B I32C I32D I32E I32F
	21B	X05Z
82.53↔		BORP EML MBOR VAC VAC I VAC II VBOR
	01	B17A B17B
	04	E36A E36B
	06	G12A G16A G38A G38B
	08	I02A I02B I02C I12A I12B I12C I32A I32B I32C I32D I32E I32F
	09	J02A J02B J03A J03B J04Z J11A J11B
	21B	X05Z
	Prä	B61B B61C B61D
82.54↔		BORP EML MBOR VAC VAC I VAC II VBOR
	01	B17A B17B
	04	E36A E36B
	06	G12A G16A G38A G38B
	08	I02A I02B I02C I32A I32B I32C I32D I32E I32F
	09	J02A J02B J03A J03B J04Z J10A J10B
	21B	X05Z
82.55↔		BORP EML MBOR VAC VAC I VAC II VBOR
	01	B17A B17B
	04	E36A E36B
	06	G12A G16A G38A G38B
	08	I02A I02B I02C I32A I32B I32C I32D I32E I32F
	09	J02A J02B J03A J03B J04Z J10A J10B
	21B	X05Z
82.56↔		BORP EML MBOR VAC VAC I VAC II VBOR
	01	B17A B17B
	04	E36A E36B
	06	G12A G16A G38A G38B
	08	I02A I02B I02C I12A I12B I12C I32A I32B I32C I32D I32E I32F
	09	J02A J02B J03A J03B J04Z J10A J10B
	21B	X05Z
	Prä	B61B B61C B61D
82.57.10↔		BORP EML MBOR VAC VAC I VAC II VBOR
	01	B17A B17B
	04	E36A E36B
	06	G12A G16A G38A G38B
	08	I02A I02B I02C I32A I32B I32C I32D I32E I32F
	21B	X05Z
82.57.99↔		BORP EML MBOR VAC VAC I VAC II VBOR
	01	B17A B17B
	04	E36A E36B
	06	G12A G16A G38A G38B
	08	I02A I02B I02C I32A I32B I32C I32D I32E I32F
	21B	X05Z
82.58↔		BORP EML MBOR VAC VAC I VAC II VBOR
	01	B17A B17B
	04	E36A E36B
	05	F04Z F13A F13B F13C
	06	G12A G16A G38A G38B
	08	I02A I02B I02C I32A I32B I32C I32D I32E I32F
	09	J02A J02B J03A J03B J04Z J10A J10B
	10	K09A K09B
	21B	X05Z
82.59↔		BORP EML MBOR VAC VAC I VAC II VBOR
	01	B17A B17B
	04	E36A E36B
	05	F04Z F13A F13B F13C
	06	G12A G16A G38A G38B
	08	I02A I02B I02C I32A I32B I32C I32D I32E I32F
	09	J02A J02B J03A J03B J04Z J10A J10B
	10	K09A K09B
	21B	X05Z
82.61↔		BORP EML MBOR VAC VAC I VAC II VBOR
	01	B17A B17B
	04	E36A E36B
	06	G12A G16A G38A G38B
	08	I02A I02B I02C I32A I32B I32C I32E I32F
	21B	X07A X07B
82.69↔		BORP EML MBOR VAC VAC I VAC II VBOR
	01	B17A B17B
	04	E36A E36B
	06	G12A G16A G38A G38B
	08	I02A I02B I02C I32A I32B I32C I32E I32F
	21B	X05Z
82.71↔		BORP EML MBOR VAC VAC I VAC II VBOR
	01	B17A B17B
	04	E36A E36B
	06	G12A G16A G38A G38B
	08	I02A I02B I02C I32A I32B I32C I32E I32F
	21B	X05Z
82.72.00↔		BORP EML MBOR VAC VAC I VAC II VBOR
	01	B17A B17B
	04	E36A E36B
	06	G12A G16A G38A G38B
	08	I02A I02B I02C I32A I32B I32C I32E I32F
	09	J02A J02B J03A J03B J04Z J10A J10B
	21B	X05Z
82.72.10↔		BORP EML MBOR VAC VAC I VAC II VBOR
	01	B17A B17B
	04	E36A E36B
	06	G12A G16A G38A

PROC

PROC

CHOP	MDC	DRG
		G38B
	08	I02A I02B I02C I32A I32B I32C I32E I32F
	09	J02A J02B J03A J03B J04Z J10A J10B
	21B	X05Z
82.72.11↔		BORP EML MBOR VAC VAC I VAC II VBOR
	01	B17A B17B
	04	E36A E36B
	06	G12A G16A G38A G38B
	08	I02A I02B I02C I32A I32B I32C I32E I32F
	09	J02A J02B J03A J03B J04Z J10A J10B
	21B	X05Z
82.72.21↔		BORP KORP MBOR MKOR VAC VAC I VAC II VB VBOR VKOR
	01	B17A B17B
	03	D02A D02B D24A D24B
	04	E36A E36B
	05	F04Z F13A F13B F13C F21A F21B F21C
	06	G12A G16A G38A G38B
	08	I02A I02B I02C
	09	J01A J01B J02A J02B
	12	M37Z
	21A	W01A W01B
	21B	X01A X05Z X06A X06B X06C X07A X07B
	22	Y02A Y02B
82.72.99↔		BORP EML MBOR VAC VAC I VAC II VBOR
	01	B17A B17B
	04	E36A E36B
	06	G12A G16A G38A G38B
	08	I02A I02B I02C I32A I32B I32C I32E I32F
	09	J02A J02B J03A J03B J04Z J10A J10B
	21B	X05Z
82.79↔		BORP EML MBOR VAC VAC I VAC II VBOR
	01	B17A B17B
	04	E36A E36B
	06	G12A G16A G38A G38B
	08	I02A I02B I02C I12A I12B I12C I32A I32B I32C I32E I32F
	09	J02A J02B J03A J03B J04Z J10A J10B
	21B	X05Z
	Prä	B61B B61C B61D
82.81↔		BORP EML MBOR VAC VAC I VAC II VBOR
	01	B17A B17B
	04	E36A E36B
	06	G12A G16A G38A G38B
	08	I02A I02B I02C I32A I32B I32C I32E I32F
	21B	X07A X07B
82.82↔		BORP EML MBOR VAC VAC I VAC II VBOR
	01	B17A B17B
	04	E36A E36B
	05	F21A F21B F21C
	06	G12A G16A G38A G38B
	08	I02A I02B I02C I32A I32B I32C I32D I32E I32F
	09	J02A J02B J03A J03B J04Z J08Z J10A J10B J21Z J22Z
	21B	X01A X01B X05Z X07A X07B
82.83↔		BORP EML MBOR VAC VAC I VAC II VBOR
	01	B17A B17B
	04	E36A E36B
	06	G12A G16A G38A G38B
	08	I02A I02B I02C I32A I32B I32C I32D I32E I32F
	09	J02A J02B J03A J03B J04Z J10A J10B
	21B	X05Z
82.84↔		BORP EML MBOR VAC VAC I VAC II VBOR
	04	E36A E36B
	06	G12A G16A G38A G38B
	08	I02A I02B I02C I32A I32B I32C I32D I32E I32F
	21B	X05Z
82.85↔		BORP EML MBOR VAC VAC I VAC II VBOR
	01	B17A B17B
	04	E36A E36B
	06	G12A G16A G38A G38B
	08	I02A I02B I02C I32A I32B I32C I32D I32E I32F
	09	J02A J02B J03A J03B J04Z J11A J11B
	21B	X05Z
82.86.10↔		BORP EML MBOR VAC VAC I VAC II VBOR
	01	B17A B17B
	04	E36A E36B
	06	G12A G16A G38A G38B
	08	I02A I02B I02C I12A I12B I12C I32A I32B I32C I32D I32E I32F
	09	J02A J02B J03A J03B J04Z J10A J10B J11A J11B
	21B	X05Z
	Prä	B61B B61C B61D
82.86.11↔		BORP EML MBOR VAC VAC I VAC II VBOR
	01	B17A B17B
	04	E36A E36B
	06	G12A G16A G38A G38B
	08	I02A I02B I02C I12A I12B I12C I32A I32B I32C I32D I32E I32F
	09	J02A J02B J03A J03B J04Z J10A J10B J11A J11B
	21B	X05Z
	Prä	B61B B61C B61D
82.86.12↔		BORP EML MBOR VAC VAC I VAC II VBOR
	01	B17A B17B
	04	E36A E36B
	06	G12A G16A G38A G38B
	08	I02A I02B I02C I32A I32B I32C I32D I32E I32F
	09	J02A J02B J03A J03B J04Z J10A J10B J11A J11B
	21B	X05Z
82.86.13↔		BORP EML MBOR VAC VAC I VAC II VBOR
	01	B17A B17B
	04	E36A E36B
	06	G12A G16A G38A G38B
	08	I02A I02B I02C I12A I12B I12C I32A I32B I32C I32D I32E I32F
	09	J02A J02B J03A J03B J04Z J10A J10B J11A J11B
	21B	X05Z
	Prä	B61B B61C B61D
82.86.99↔		BORP EML MBOR VAC VAC I VAC II VBOR
	01	B17A B17B
	04	E36A E36B
	06	G12A G16A G38A G38B
	08	I02A I02B I02C

CHOP	MDC	DRG
		I12A I12B I12C
		I32A I32B I32C
		I32D I32E I32F
	09	J02A J02B J03A
		J03B J04Z J10A
		J10B J11A J11B
	21B	X05Z
	Prä	B61B B61C B61D
82.89.10↔		BORP EML MBOR
		VAC VAC I VAC II
		VBOR
	01	B17A B17B
	04	E36A E36B
	05	F21A F21B F21C
	06	G12A G16A G38A
		G38B
	08	I02A I02B I02C
		I32A I32B I32C
		I32D I32E I32F
	09	J02A J02B J03A
		J03B J04Z J08Z
		J10A J10B J21Z
		J22Z
	21B	X01A X01B X05Z
		X07A X07B
82.89.11↔		BORP EML MBOR
		VAC VAC I VAC II
		VBOR
	01	B17A B17B
	04	E36A E36B
	05	F21A F21B F21C
	06	G12A G16A G38A
		G38B
	08	I02A I02B I02C
		I32A I32B I32C
		I32D I32E I32F
	09	J02A J02B J03A
		J03B J04Z J08Z
		J10A J10B J21Z
		J22Z
	21B	X01A X01B X05Z
		X07A X07B
82.89.12↔		BORP EML MBOR
		VAC VAC I VAC II
		VBOR
	01	B17A B17B
	04	E36A E36B
	05	F21A F21B F21C
	06	G12A G16A G38A
		G38B
	08	I02A I02B I02C
		I32A I32B I32C
		I32D I32E I32F
	09	J02A J02B J03A
		J03B J04Z J08Z
		J10A J10B J21Z
		J22Z
	21B	X01A X01B X05Z
		X07A X07B
82.89.13↔		BORP EML MBOR
		VAC VAC I VAC II
		VBOR
	01	B17A B17B
	04	E36A E36B
	05	F21A F21B F21C
	06	G12A G16A G38A
		G38B
	08	I02A I02B I02C
		I32A I32B I32C
		I32D I32E I32F

CHOP	MDC	DRG
	09	J02A J02B J03A
		J03B J04Z J08Z
		J10A J10B J21Z
		J22Z
	21B	X01A X01B X05Z
		X07A X07B
82.89.14↔		BORP EML MBOR
		VAC VAC I VAC II
		VBOR
	01	B17A B17B
	04	E36A E36B
	05	F21A F21B F21C
	06	G12A G16A G38A
		G38B
	08	I02A I02B I02C
		I32A I32B I32C
		I32D I32E I32F
	09	J02A J02B J03A
		J03B J04Z J08Z
		J10A J10B J21Z
		J22Z
	21B	X01A X01B X05Z
		X07A X07B
82.89.15↔		BORP EML MBOR
		VAC VAC I VAC II
		VBOR
	01	B17A B17B
	04	E36A E36B
	05	F21A F21B F21C
	06	G12A G16A G38A
		G38B
	08	I02A I02B I02C
		I32A I32B I32C
		I32D I32E I32F
	09	J02A J02B J03A
		J03B J04Z J08Z
		J10A J10B J21Z
		J22Z
	21B	X01A X01B X05Z
		X07A X07B
82.89.16↔		BORP EML MBOR
		VAC VAC I VAC II
		VBOR
	01	B17A B17B
	04	E36A E36B
	05	F21A F21B F21C
	06	G12A G16A G38A
		G38B
	08	I02A I02B I02C
		I32A I32B I32C
		I32D I32E I32F
	09	J02A J02B J03A
		J03B J04Z J08Z
		J10A J10B J21Z
		J22Z
	21B	X01A X01B X05Z
		X07A X07B
83.02.10↔		BORP MBOR VAC
		VAC I VAC II VBOR
	01	B17A B17B
	03	D12A D12B
	04	E02A E02B E02C
		E36A E36B
	05	F21A F21B F21C
	06	G12A G12B G16A
		G38A G38B
	07	H06Z
	08	I29A I29B I29C
	09	J11A J11B
	10	K09A K09B

CHOP	MDC	DRG
	11	L09A L09B
	12	M06Z M37Z
	13	N11A N11B
	21B	X06A X06B X06C
83.02.11↔		BORP MBOR VAC
		VAC I VAC II VBOR
	01	B17A B17B
	03	D12A D12B
	04	E02A E02B E02C
		E36A E36B
	05	F21A F21B F21C
	06	G12A G12B G16A
		G38A G38B
	07	H06Z
	08	I29A I29B I29C
	09	J11A J11B
	10	K09A K09B
	11	L09A L09B
	12	M06Z M37Z
	13	N11A N11B
	21B	X06A X06B X06C
83.02.12↔		BORP MBOR VAC
		VAC I VAC II VBOR
	01	B17A B17B
	03	D12A D12B
	04	E02A E02B E02C
		E36A E36B
	05	F21A F21B F21C
	06	G12A G12B G16A
		G38A G38B
	07	H06Z
	08	I29A I29B I29C
	09	J11A J11B
	10	K09A K09B
	11	L09A L09B
	12	M06Z M37Z
	13	N11A N11B
	21B	X06A X06B X06C
83.02.13↔		BORP MBOR VAC
		VAC I VAC II VBOR
	01	B17A B17B
	03	D12A D12B
	04	E02A E02B E02C
		E36A E36B
	05	F21A F21B F21C
	06	G12A G12B G16A
		G38A G38B
	07	H06Z
	08	I27A I27B I27C
		I27D
	09	J11A J11B
	10	K09A K09B
	11	L09A L09B
	12	M06Z M37Z
	13	N11A N11B
	21B	X06A X06B X06C
83.02.14↔		BORP MBOR VAC
		VAC I VAC II VBOR
	01	B17A B17B
	03	D12A D12B
	04	E02A E02B E02C
		E36A E36B
	05	F21A F21B F21C
	06	G12A G12B G16A
		G38A G38B
	07	H06Z
	08	I27A I27B I27C
		I27D
	09	J11A J11B
	10	K09A K09B

PROC

PROC

CHOP	MDC	DRG
	11	L09A L09B
	12	M06Z M37Z
	13	N11A N11B
	21B	X06A X06B X06C
83.02.15↔		BORP MBOR VAC
		VAC I VAC II VBOR
	01	B17A B17B
	03	D12A D12B
	04	E02A E02B E02C
		E36A E36B
	05	F21A F21B F21C
	06	G12A G12B G16A
		G38A G38B
	07	H06Z
	08	I27A I27B I27C
		I27D
	09	J11A J11B
	10	K09A K09B
	11	L09A L09B
	12	M06Z M37Z
	13	N11A N11B
	21B	X06A X06B X06C
83.02.16↔		BORP MBOR VAC
		VAC I VAC II VBOR
	01	B17A B17B
	03	D12A D12B
	04	E02A E02B E02C
		E36A E36B
	05	F21A F21B F21C
	06	G12A G12B G16A
		G38A G38B
	07	H06Z
	08	I27A I27B I27C
		I27D
	09	J11A J11B
	10	K09A K09B
	11	L09A L09B
	12	M06Z M37Z
	13	N11A N11B
	21B	X06A X06B X06C
83.02.19↔		BORP MBOR VAC
		VAC I VAC II VBOR
	01	B17A B17B
	03	D12A D12B
	04	E02A E02B E02C
		E36A E36B
	05	F21A F21B F21C
	06	G12A G12B G16A
		G38A G38B
	07	H06Z
	08	I27A I27B I27C
		I27D
	09	J11A J11B
	10	K09A K09B
	11	L09A L09B
	12	M06Z M37Z
	13	N11A N11B
	21B	X06A X06B X06C
83.03.10↔		BORP MBOR VAC
		VAC I VAC II VBOR
	01	B17A B17B
	03	D12A D12B
	04	E02A E02B E02C
		E36A E36B
	05	F21A F21B F21C
	06	G12A G12B G16A
		G38A G38B
	07	H06Z
	08	I29A I29B I29C
	09	J11A J11B

CHOP	MDC	DRG
	10	K09A K09B
	11	L09A L09B
	12	M06Z M37Z
	13	N11A N11B
	21B	X06A X06B X06C
83.03.11↔		BORP MBOR VAC
		VAC I VAC II VBOR
	01	B17A B17B
	03	D12A D12B
	04	E02A E02B E02C
		E36A E36B
	05	F21A F21B F21C
	06	G12A G12B G16A
		G38A G38B
	07	H06Z
	08	I29A I29B I29C
	09	J11A J11B
	10	K09A K09B
	11	L09A L09B
	12	M06Z M37Z
	13	N11A N11B
	21B	X06A X06B X06C
83.03.12↔		BORP MBOR VAC
		VAC I VAC II VBOR
	01	B17A B17B
	03	D12A D12B
	04	E02A E02B E02C
		E36A E36B
	05	F21A F21B F21C
	06	G12A G12B G16A
		G38A G38B
	07	H06Z
	08	I29A I29B I29C
	09	J11A J11B
	10	K09A K09B
	11	L09A L09B
	12	M06Z M37Z
	13	N11A N11B
	21B	X06A X06B X06C
83.03.13↔		BORP MBOR VAC
		VAC I VAC II VBOR
	01	B17A B17B
	03	D12A D12B
	04	E02A E02B E02C
		E36A E36B
	05	F21A F21B F21C
	06	G12A G12B G16A
		G38A G38B
	07	H06Z
	08	I27A I27B I27C
		I27D
	09	J11A J11B
	10	K09A K09B
	11	L09A L09B
	12	M06Z M37Z
	13	N11A N11B
	21B	X06A X06B X06C
83.03.14↔		BORP MBOR VAC
		VAC I VAC II VBOR
	01	B17A B17B
	03	D12A D12B
	04	E02A E02B E02C
		E36A E36B
	05	F21A F21B F21C
	06	G12A G12B G16A
		G38A G38B
	07	H06Z
	08	I27A I27B I27C
		I27D
	09	J11A J11B

CHOP	MDC	DRG
	10	K09A K09B
	11	L09A L09B
	12	M06Z M37Z
	13	N11A N11B
	21B	X06A X06B X06C
83.03.15↔		BORP MBOR VAC
		VAC I VAC II VBOR
	01	B17A B17B
	03	D12A D12B
	04	E02A E02B E02C
		E36A E36B
	05	F21A F21B F21C
	06	G12A G12B G16A
		G38A G38B
	07	H06Z
	08	I27A I27B I27C
		I27D
	09	J11A J11B
	10	K09A K09B
	11	L09A L09B
	12	M06Z M37Z
	13	N11A N11B
	21B	X06A X06B X06C
83.03.16↔		BORP MBOR VAC
		VAC I VAC II VBOR
	01	B17A B17B
	03	D12A D12B
	04	E02A E02B E02C
		E36A E36B
	05	F21A F21B F21C
	06	G12A G12B G16A
		G38A G38B
	07	H06Z
	08	I27A I27B I27C
		I27D
	09	J11A J11B
	10	K09A K09B
	11	L09A L09B
	12	M06Z M37Z
	13	N11A N11B
	21B	X06A X06B X06C
83.03.19↔		BORP MBOR VAC
		VAC I VAC II VBOR
	01	B17A B17B
	03	D12A D12B
	04	E02A E02B E02C
		E36A E36B
	05	F21A F21B F21C
	06	G12A G12B G16A
		G38A G38B
	07	H06Z
	08	I27A I27B I27C
		I27D
	09	J11A J11B
	10	K09A K09B
	11	L09A L09B
	12	M06Z M37Z
	13	N11A N11B
	21B	X06A X06B X06C
83.09.10↔		BORP MBOR VAC
		VAC I VAC II VBOR
	01	B17A B17B
	03	D12A D12B
	04	E02A E02B E02C
		E36A E36B
	05	F21A F21B F21C
	06	G12A G12B G16A
		G38A G38B
	07	H06Z
	08	I29A I29B I29C

CHOP	MDC	DRG
	09	J11A J11B
	10	K09A K09B
	11	L09A L09B
	12	M06Z M37Z
	13	N11A N11B
	21B	X06A X06B X06C
83.09.11↔		BORP MBOR VAC VAC I VAC II VBOR
	01	B17A B17B
	03	D12A D12B
	04	E02A E02B E02C E36A E36B
	05	F21A F21B F21C
	06	G12A G12B G16A G38A G38B
	07	H06Z
	08	I29A I29B I29C
	09	J11A J11B
	10	K09A K09B
	11	L09A L09B
	12	M06Z M37Z
	13	N11A N11B
	21B	X06A X06B X06C
83.09.12↔		BORP MBOR VAC VAC I VAC II VBOR
	01	B17A B17B
	03	D12A D12B
	04	E02A E02B E02C E36A E36B
	05	F21A F21B F21C
	06	G12A G12B G16A G38A G38B
	07	H06Z
	08	I29A I29B I29C
	09	J11A J11B
	10	K09A K09B
	11	L09A L09B
	12	M06Z M37Z
	13	N11A N11B
	21B	X06A X06B X06C
83.09.13↔		BORP MBOR VAC VAC I VAC II VBOR
	01	B17A B17B
	03	D12A D12B
	04	E02A E02B E02C E36A E36B
	05	F21A F21B F21C
	06	G12A G12B G16A G38A G38B
	07	H06Z
	08	I27A I27B I27C I27D
	09	J11A J11B
	10	K09A K09B
	11	L09A L09B
	12	M06Z M37Z
	13	N11A N11B
	21B	X06A X06B X06C
83.09.14↔		BORP MBOR VAC VAC I VAC II VBOR
	01	B17A B17B
	03	D12A D12B
	04	E02A E02B E02C E36A E36B
	05	F21A F21B F21C
	06	G12A G12B G16A G38A G38B
	07	H06Z
	08	I27A I27B I27C I27D
	09	J11A J11B
	10	K09A K09B
	11	L09A L09B
	12	M06Z M37Z
	13	N11A N11B
	21B	X06A X06B X06C
83.09.15↔		BORP MBOR VAC VAC I VAC II VBOR
	01	B17A B17B
	03	D12A D12B
	04	E02A E02B E02C E36A E36B
	05	F21A F21B F21C
	06	G12A G12B G16A G38A G38B
	07	H06Z
	08	I27A I27B I27C I27D
	09	J11A J11B
	10	K09A K09B
	11	L09A L09B
	12	M06Z M37Z
	13	N11A N11B
	21B	X06A X06B X06C
83.09.16↔		BORP MBOR VAC VAC I VAC II VBOR
	01	B17A B17B
	03	D12A D12B
	04	E02A E02B E02C E36A E36B
	05	F21A F21B F21C
	06	G12A G12B G16A G38A G38B
	07	H06Z
	08	I27A I27B I27C I27D
	09	J11A J11B
	10	K09A K09B
	11	L09A L09B
	12	M06Z M37Z
	13	N11A N11B
	21B	X06A X06B X06C
83.09.19↔		BORP MBOR VAC VAC I VAC II VBOR
	01	B17A B17B
	03	D12A D12B
	04	E02A E02B E02C E36A E36B
	05	F21A F21B F21C
	06	G12A G12B G16A G38A G38B
	07	H06Z
	08	I27A I27B I27C I27D
	09	J11A J11B
	10	K09A K09B
	11	L09A L09B
	12	M06Z M37Z
	13	N11A N11B
	21B	X06A X06B X06C
83.11↔		BORP MBOR VAC VAC I VAC II VBOR
	01	B17A B17B
	03	D12A D12B
	04	E02A E02B E02C E36A E36B
	05	F21A F21B F21C
	06	G12A G12B G16A G38A G38B
	07	H06Z
	08	I27A I27B I27C I27D
	09	J11A J11B
	10	K09A K09B
	11	L09A L09B
	12	M06Z M37Z
	13	N11A N11B
	21B	X06A X06B X06C
83.12↔		BORP MBOR VAC VAC I VAC II VBOR
	01	B17A B17B
	03	D12A D12B
	04	E02A E02B E02C E36A E36B
	05	F21A F21B F21C
	06	G12A G12B G16A G38A G38B
	07	H06Z
	08	I27A I27B I27C I27D
	09	J11A J11B
	10	K09A K09B
	11	L09A L09B
	12	M06Z M37Z
	13	N11A N11B
	21B	X06A X06B X06C
83.13.10↔		BORP MBOR VAC VBOR
	01	B17A B17B
	03	D12A D12B
	04	E02A E02B E02C E36A E36B
	05	F21A F21B F21C
	06	G12A G12B G16A G38A G38B
	07	H06Z
	08	I29A I29B I29C
	09	J11A J11B
	10	K09A K09B
	11	L09A L09B
	12	M06Z M37Z
	13	N11A N11B
	21B	X06A X06B X06C
83.13.11↔		BORP MBOR VAC VBOR
	01	B17A B17B
	03	D12A D12B
	04	E02A E02B E02C E36A E36B
	05	F21A F21B F21C
	06	G12A G12B G16A G38A G38B
	07	H06Z
	08	I29A I29B I29C
	09	J11A J11B
	10	K09A K09B
	11	L09A L09B
	12	M06Z M37Z
	13	N11A N11B
	21B	X06A X06B X06C
83.13.12↔		BORP MBOR VAC VBOR
	01	B17A B17B
	03	D12A D12B
	04	E02A E02B E02C E36A E36B
	05	F21A F21B F21C
	06	G12A G12B G16A G38A G38B
	07	H06Z

PROC

CHOP	MDC	DRG
	08	I29A I29B I29C
	09	J11A J11B
	10	K09A K09B
	11	L09A L09B
	12	M06Z M37Z
	13	N11A N11B
	21B	X06A X06B X06C
83.13.13↔		BORP MBOR VAC VBOR
	01	B17A B17B
	03	D12A D12B
	04	E02A E02B E02C E36A E36B
	05	F21A F21B F21C
	06	G12A G12B G16A G38A G38B
	07	H06Z
	08	I27A I27B I27C I27D
	09	J11A J11B
	10	K09A K09B
	11	L09A L09B
	12	M06Z M37Z
	13	N11A N11B
	21B	X06A X06B X06C
83.13.14↔		BORP MBOR VAC VBOR
	01	B17A B17B
	03	D12A D12B
	04	E02A E02B E02C E36A E36B
	05	F21A F21B F21C
	06	G12A G12B G16A G38A G38B
	07	H06Z
	08	I27A I27B I27C I27D
	09	J11A J11B
	10	K09A K09B
	11	L09A L09B
	12	M06Z M37Z
	13	N11A N11B
	21B	X06A X06B X06C
83.13.15↔		BORP MBOR VAC VBOR
	01	B17A B17B
	03	D12A D12B
	04	E02A E02B E02C E36A E36B
	05	F21A F21B F21C
	06	G12A G12B G16A G38A G38B
	07	H06Z
	08	I27A I27B I27C I27D
	09	J11A J11B
	10	K09A K09B
	11	L09A L09B
	12	M06Z M37Z
	13	N11A N11B
	21B	X06A X06B X06C
83.13.16↔		BORP MBOR VAC VBOR
	01	B17A B17B
	03	D12A D12B
	04	E02A E02B E02C E36A E36B
	05	F21A F21B F21C
	06	G12A G12B G16A G38A G38B
	07	H06Z
	08	I27A I27B I27C I27D
	09	J11A J11B
	10	K09A K09B
	11	L09A L09B
	12	M06Z M37Z
	13	N11A N11B
	21B	X06A X06B X06C
83.13.20↔		BORP MBOR VAC VBOR
	01	B17A B17B
	03	D12A D12B
	04	E02A E02B E02C E36A E36B
	05	F21A F21B F21C
	06	G12A G12B G16A G38A G38B
	07	H06Z
	08	I29A I29B I29C
	09	J11A J11B
	10	K09A K09B
	11	L09A L09B
	12	M06Z M37Z
	13	N11A N11B
	21B	X06A X06B X06C
83.13.21↔		BORP MBOR VAC VBOR
	01	B17A B17B
	03	D12A D12B
	04	E02A E02B E02C E36A E36B
	05	F21A F21B F21C
	06	G12A G12B G16A G38A G38B
	07	H06Z
	08	I29A I29B I29C
	09	J11A J11B
	10	K09A K09B
	11	L09A L09B
	12	M06Z M37Z
	13	N11A N11B
	21B	X06A X06B X06C
83.13.22↔		BORP MBOR VAC VBOR
	01	B17A B17B
	03	D12A D12B
	04	E02A E02B E02C E36A E36B
	05	F21A F21B F21C
	06	G12A G12B G16A G38A G38B
	07	H06Z
	08	I29A I29B I29C
	09	J11A J11B
	10	K09A K09B
	11	L09A L09B
	12	M06Z M37Z
	13	N11A N11B
	21B	X06A X06B X06C
83.13.23↔		BORP MBOR VAC VBOR
	01	B17A B17B
	03	D12A D12B
	04	E02A E02B E02C E36A E36B
	05	F21A F21B F21C
	06	G12A G12B G16A G38A G38B
	07	H06Z
	08	I27A I27B I27C I27D
	09	J11A J11B
	10	K09A K09B
	11	L09A L09B
	12	M06Z M37Z
	13	N11A N11B
	21B	X06A X06B X06C
83.13.24↔		BORP MBOR VAC VBOR
	01	B17A B17B
	03	D12A D12B
	04	E02A E02B E02C E36A E36B
	05	F21A F21B F21C
	06	G12A G12B G16A G38A G38B
	07	H06Z
	08	I27A I27B I27C I27D
	09	J11A J11B
	10	K09A K09B
	11	L09A L09B
	12	M06Z M37Z
	13	N11A N11B
	21B	X06A X06B X06C
83.13.25↔		BORP MBOR VAC VBOR
	01	B17A B17B
	03	D12A D12B
	04	E02A E02B E02C E36A E36B
	05	F21A F21B F21C
	06	G12A G12B G16A G38A G38B
	07	H06Z
	08	I27A I27B I27C I27D
	09	J11A J11B
	10	K09A K09B
	11	L09A L09B
	12	M06Z M37Z
	13	N11A N11B
	21B	X06A X06B X06C
83.13.26↔		BORP MBOR VAC VBOR
	01	B17A B17B
	03	D12A D12B
	04	E02A E02B E02C E36A E36B
	05	F21A F21B F21C
	06	G12A G12B G16A G38A G38B
	07	H06Z
	08	I27A I27B I27C I27D
	09	J11A J11B
	10	K09A K09B
	11	L09A L09B
	12	M06Z M37Z
	13	N11A N11B
	21B	X06A X06B X06C
83.14.10↔	01	B17A B17B
	03	D12A D12B
	04	E02A E02B E02C
	05	F21A F21B F21C
	06	G12A G12B
	07	H06Z
	08	I29A I29B I29C
	09	J11A J11B

CHOP	MDC	DRG
	10	K09A K09B
	11	L09A L09B
	12	M06Z M37Z
	13	N11A N11B
	21B	X06A X06B X06C
83.14.11↔	01	B17A B17B
	03	D12A D12B
	04	E02A E02B E02C
	05	F21A F21B F21C
	06	G12A G12B
	07	H06Z
	08	I29A I29B I29C
	09	J11A J11B
	10	K09A K09B
	11	L09A L09B
	12	M06Z M37Z
	13	N11A N11B
	21B	X06A X06B X06C
83.14.12↔	01	B17A B17B
	03	D12A D12B
	04	E02A E02B E02C
	05	F21A F21B F21C
	06	G12A G12B
	07	H06Z
	08	I29A I29B I29C
	09	J11A J11B
	10	K09A K09B
	11	L09A L09B
	12	M06Z M37Z
	13	N11A N11B
	21B	X06A X06B X06C
83.14.13↔	01	B17A B17B
	03	D12A D12B
	04	E02A E02B E02C
	05	F21A F21B F21C
	06	G12A G12B
	07	H06Z
	08	I27A I27B I27C
		I27D
	09	J11A J11B
	10	K09A K09B
	11	L09A L09B
	12	M06Z M37Z
	13	N11A N11B
	21B	X06A X06B X06C
83.14.14↔	01	B17A B17B
	03	D12A D12B
	04	E02A E02B E02C
	05	F21A F21B F21C
	06	G12A G12B
	07	H06Z
	08	I27A I27B I27C
		I27D
	09	J11A J11B
	10	K09A K09B
	11	L09A L09B
	12	M06Z M37Z
	13	N11A N11B
	21B	X06A X06B X06C
83.14.15↔	01	B17A B17B
	03	D12A D12B
	04	E02A E02B E02C
	05	F21A F21B F21C
	06	G12A G12B
	07	H06Z
	08	I27A I27B I27C
		I27D
	09	J11A J11B
	10	K09A K09B
	11	L09A L09B
	12	M06Z M37Z
	13	N11A N11B
	21B	X06A X06B X06C
83.14.16↔	01	B17A B17B
	03	D12A D12B
	04	E02A E02B E02C
	05	F21A F21B F21C
	06	G12A G12B
	07	H06Z
	08	I27A I27B I27C
		I27D
	09	J11A J11B
	10	K09A K09B
	11	L09A L09B
	12	M06Z M37Z
	13	N11A N11B
	21B	X06A X06B X06C
83.19.10↔		BORP MBOR VAC
		VBOR
	01	B17A B17B
	03	D12A D12B
	04	E02A E02B E02C
		E36A E36B
	05	F21A F21B F21C
	06	G12A G12B G16A
		G38A G38B
	07	H06Z
	08	I29A I29B I29C
	09	J11A J11B
	10	K09A K09B
	11	L09A L09B
	12	M06Z M37Z
	13	N11A N11B
	21B	X06A X06B X06C
83.19.11↔		BORP MBOR VAC
		VBOR
	01	B17A B17B
	03	D12A D12B
	04	E02A E02B E02C
		E36A E36B
	05	F21A F21B F21C
	06	G12A G12B G16A
		G38A G38B
	07	H06Z
	08	I29A I29B I29C
	09	J11A J11B
	10	K09A K09B
	11	L09A L09B
	12	M06Z M37Z
	13	N11A N11B
	21B	X06A X06B X06C
83.19.12↔		BORP MBOR VAC
		VBOR
	01	B17A B17B
	03	D12A D12B
	04	E02A E02B E02C
		E36A E36B
	05	F21A F21B F21C
	06	G12A G12B G16A
		G38A G38B
	07	H06Z
	08	I29A I29B I29C
	09	J11A J11B
	10	K09A K09B
	11	L09A L09B
	12	M06Z M37Z
	13	N11A N11B
	21B	X06A X06B X06C
83.19.13↔		BORP MBOR VAC
		VBOR
	01	B17A B17B
	03	D12A D12B
	04	E02A E02B E02C
		E36A E36B
	05	F21A F21B F21C
	06	G12A G12B G16A
		G38A G38B
	07	H06Z
	08	I27A I27B I27C
		I27D
	09	J11A J11B
	10	K09A K09B
	11	L09A L09B
	12	M06Z M37Z
	13	N11A N11B
	21B	X06A X06B X06C
83.19.14↔		BORP MBOR VAC
		VBOR
	01	B17A B17B
	03	D12A D12B
	04	E02A E02B E02C
		E36A E36B
	05	F21A F21B F21C
	06	G12A G12B G16A
		G38A G38B
	07	H06Z
	08	I27A I27B I27C
		I27D
	09	J11A J11B
	10	K09A K09B
	11	L09A L09B
	12	M06Z M37Z
	13	N11A N11B
	21B	X06A X06B X06C
83.19.15↔		BORP MBOR VAC
		VBOR
	01	B17A B17B
	03	D12A D12B
	04	E02A E02B E02C
		E36A E36B
	05	F21A F21B F21C
	06	G12A G12B G16A
		G38A G38B
	07	H06Z
	08	I27A I27B I27C
		I27D
	09	J11A J11B
	10	K09A K09B
	11	L09A L09B
	12	M06Z M37Z
	13	N11A N11B
	21B	X06A X06B X06C
83.19.16↔		BORP MBOR VAC
		VBOR
	01	B17A B17B
	03	D12A D12B
	04	E02A E02B E02C
		E36A E36B
	05	F21A F21B F21C
	06	G12A G12B G16A
		G38A G38B
	07	H06Z
	08	I27A I27B I27C
		I27D
	09	J11A J11B
	10	K09A K09B
	11	L09A L09B
	12	M06Z M37Z
	13	N11A N11B
	21B	X06A X06B X06C

PROC

PROC

CHOP	MDC	DRG
83.19.20↔		BORP MBOR VAC
		VAC I VAC II VBOR
	01	B17A B17B
	03	D12A D12B
	04	E02A E02B E02C
		E36A E36B
	05	F21A F21B F21C
	06	G12A G12B G16A
		G38A G38B
	07	H06Z
	08	I29A I29B I29C
	09	J11A J11B
	10	K09A K09B
	11	L09A L09B
	12	M06Z M37Z
	13	N11A N11B
	21B	X06A X06B X06C
83.19.21↔		BORP MBOR VAC
		VAC I VAC II VBOR
	01	B17A B17B
	03	D12A D12B
	04	E02A E02B E02C
		E36A E36B
	05	F21A F21B F21C
	06	G12A G12B G16A
		G38A G38B
	07	H06Z
	08	I29A I29B I29C
	09	J11A J11B
	10	K09A K09B
	11	L09A L09B
	12	M06Z M37Z
	13	N11A N11B
	21B	X06A X06B X06C
83.19.22↔		BORP MBOR VAC
		VAC I VAC II VBOR
	01	B17A B17B
	03	D12A D12B
	04	E02A E02B E02C
		E36A E36B
	05	F21A F21B F21C
	06	G12A G12B G16A
		G38A G38B
	07	H06Z
	08	I29A I29B I29C
	09	J11A J11B
	10	K09A K09B
	11	L09A L09B
	12	M06Z M37Z
	13	N11A N11B
	21B	X06A X06B X06C
83.19.23↔		BORP MBOR VAC
		VAC I VAC II VBOR
	01	B17A B17B
	03	D12A D12B
	04	E02A E02B E02C
		E36A E36B
	05	F21A F21B F21C
	06	G12A G12B G16A
		G38A G38B
	07	H06Z
	08	I27A I27B I27C
		I27D
	09	J11A J11B
	10	K09A K09B
	11	L09A L09B
	12	M06Z M37Z
	13	N11A N11B
	21B	X06A X06B X06C
83.19.24↔		BORP MBOR VAC
		VAC I VAC II VBOR
	01	B17A B17B
	03	D12A D12B
	04	E02A E02B E02C
		E36A E36B
	05	F21A F21B F21C
	06	G12A G12B G16A
		G38A G38B
	07	H06Z
	08	I27A I27B I27C
		I27D
	09	J11A J11B
	10	K09A K09B
	11	L09A L09B
	12	M06Z M37Z
	13	N11A N11B
	21B	X06A X06B X06C
83.19.25↔		BORP MBOR VAC
		VAC I VAC II VBOR
	01	B17A B17B
	03	D12A D12B
	04	E02A E02B E02C
		E36A E36B
	05	F21A F21B F21C
	06	G12A G12B G16A
		G38A G38B
	07	H06Z
	08	I27A I27B I27C
		I27D
	09	J11A J11B
	10	K09A K09B
	11	L09A L09B
	12	M06Z M37Z
	13	N11A N11B
	21B	X06A X06B X06C
83.19.26↔		BORP MBOR VAC
		VAC I VAC II VBOR
	01	B17A B17B
	03	D12A D12B
	04	E02A E02B E02C
		E36A E36B
	05	F21A F21B F21C
	06	G12A G12B G16A
		G38A G38B
	07	H06Z
	08	I27A I27B I27C
		I27D
	09	J11A J11B
	10	K09A K09B
	11	L09A L09B
	12	M06Z M37Z
	13	N11A N11B
	21B	X06A X06B X06C
83.21.21↔	01	B17A B17B
	03	D12A D12B
	04	E02A E02B E02C
	05	F21A F21B F21C
	06	G12A G12B
	07	H06Z
	08	I27A I27B I27C
		I27D
	09	J11A J11B
	10	K09A K09B
	11	L09A L09B
	12	M06Z M37Z
	13	N11A N11B
	21B	X06A X06B X06C
83.21.30↔	01	B17A B17B
	03	D12A D12B
	04	E02A E02B E02C
	05	F21A F21B F21C
	06	G12A G12B G16A
	07	H06Z
	08	I27A I27B I27C
		I27D
	09	J11A J11B
	10	K09A K09B
	11	L09A L09B
	12	M06Z M37Z
	13	N11A N11B
	21B	X06A X06B X06C
83.31.10↔		BORP MBOR VAC
		VAC I VAC II VBOR
	01	B17A B17B
	03	D12A D12B
	04	E02A E02B E02C
		E36A E36B
	05	F21A F21B F21C
	06	G12A G12B G16A
		G38A G38B
	07	H06Z
	08	I29A I29B I29C
	09	J11A J11B
	10	K09A K09B
	11	L09A L09B
	12	M06Z M37Z
	13	N11A N11B
	21B	X06A X06B X06C
83.31.11↔		BORP MBOR VAC
		VAC I VAC II VBOR
	01	B17A B17B
	03	D12A D12B
	04	E02A E02B E02C
		E36A E36B
	05	F21A F21B F21C
	06	G12A G12B G16A
		G38A G38B
	07	H06Z
	08	I29A I29B I29C
	09	J11A J11B
	10	K09A K09B
	11	L09A L09B
	12	M06Z M37Z
	13	N11A N11B
	21B	X06A X06B X06C
83.31.12↔		BORP MBOR VAC
		VAC I VAC II VBOR
	01	B17A B17B
	03	D12A D12B
	04	E02A E02B E02C
		E36A E36B
	05	F21A F21B F21C
	06	G12A G12B G16A
		G38A G38B
	07	H06Z
	08	I29A I29B I29C
	09	J11A J11B
	10	K09A K09B
	11	L09A L09B
	12	M06Z M37Z
	13	N11A N11B
	21B	X06A X06B X06C
83.31.13↔		BORP MBOR VAC
		VAC I VAC II VBOR
	01	B17A B17B
	03	D12A D12B
	04	E02A E02B E02C
		E36A E36B
	05	F21A F21B F21C
	06	G12A G12B G16A

CHOP	MDC	DRG
		G38A G38B
	07	H06Z
	08	I27A I27B I27C
		I27D
	09	J11A J11B
	10	K09A K09B
	11	L09A L09B
	12	M06Z M37Z
	13	N11A N11B
	21B	X06A X06B X06C
83.31.14↔		BORP MBOR VAC
		VAC I VAC II VBOR
	01	B17A B17B
	03	D12A D12B
	04	E02A E02B E02C
		E36A E36B
	05	F21A F21B F21C
	06	G12A G12B G16A
		G38A G38B
	07	H06Z
	08	I27A I27B I27C
		I27D
	09	J11A J11B
	10	K09A K09B
	11	L09A L09B
	12	M06Z M37Z
	13	N11A N11B
	21B	X06A X06B X06C
83.31.15↔		BORP MBOR VAC
		VAC I VAC II VBOR
	01	B17A B17B
	03	D12A D12B
	04	E02A E02B E02C
		E36A E36B
	05	F21A F21B F21C
	06	G12A G12B G16A
		G38A G38B
	07	H06Z
	08	I27A I27B I27C
		I27D
	09	J11A J11B
	10	K09A K09B
	11	L09A L09B
	12	M06Z M37Z
	13	N11A N11B
	21B	X06A X06B X06C
83.31.16↔		BORP MBOR VAC
		VAC I VAC II VBOR
	01	B17A B17B
	03	D12A D12B
	04	E02A E02B E02C
		E36A E36B
	05	F21A F21B F21C
	06	G12A G12B G16A
		G38A G38B
	07	H06Z
	08	I27A I27B I27C
		I27D
	09	J11A J11B
	10	K09A K09B
	11	L09A L09B
	12	M06Z M37Z
	13	N11A N11B
	21B	X06A X06B X06C
83.32.10↔	01	B17A B17B
	03	D12A D12B
	04	E02A E02B E02C
	05	F21A F21B F21C
	06	G12A G12B
	07	H06Z
	08	I29A I29B I29C
	09	J11A J11B
	10	K09A K09B
	11	L09A L09B
	12	M06Z M37Z
	13	N11A N11B
	21B	X06A X06B X06C
83.32.11↔	01	B17A B17B
	03	D12A D12B
	04	E02A E02B E02C
	05	F21A F21B F21C
	06	G12A G12B
	07	H06Z
	08	I29A I29B I29C
	09	J11A J11B
	10	K09A K09B
	11	L09A L09B
	12	M06Z M37Z
	13	N11A N11B
	21B	X06A X06B X06C
83.32.12↔	01	B17A B17B
	03	D12A D12B
	04	E02A E02B E02C
	05	F21A F21B F21C
	06	G12A G12B
	07	H06Z
	08	I27A I27B I27C
		I27D
	09	J11A J11B
	10	K09A K09B
	11	L09A L09B
	12	M06Z M37Z
	13	N11A N11B
	21B	X06A X06B X06C
83.32.13↔	01	B17A B17B
	03	D12A D12B
	04	E02A E02B E02C
	05	F21A F21B F21C
	06	G12A G12B
	07	H06Z
	08	I27A I27B I27C
		I27D
	09	J11A J11B
	10	K09A K09B
	11	L09A L09B
	12	M06Z M37Z
	13	N11A N11B
	21B	X06A X06B X06C
83.32.14↔	01	B17A B17B
	03	D12A D12B
	04	E02A E02B E02C
	05	F21A F21B F21C
	06	G12A G12B
	07	H06Z
	08	I27A I27B I27C
		I27D
	09	J11A J11B
	10	K09A K09B
	11	L09A L09B
	12	M06Z M37Z
	13	N11A N11B
	21B	X06A X06B X06C
83.32.19↔	01	B17A B17B
	03	D12A D12B
	04	E02A E02B E02C
	05	F21A F21B F21C
	06	G12A G12B
	07	H06Z
	08	I27A I27B I27C
		I27D
	09	J11A J11B
	10	K09A K09B
	11	L09A L09B
	12	M06Z M37Z
	13	N11A N11B
	21B	X06A X06B X06C
83.39.10↔	01	B17A B17B
	03	D12A D12B
	04	E02A E02B E02C
	05	F21A F21B F21C
	06	G12A G12B
	07	H06Z
	08	I29A I29B I29C
	09	J11A J11B
	10	K09A K09B
	11	L09A L09B
	12	M06Z M37Z
	13	N11A N11B
	21B	X06A X06B X06C
83.39.11↔	01	B17A B17B
	03	D12A D12B
	04	E02A E02B E02C
	05	F21A F21B F21C
	06	G12A G12B
	07	H06Z
	08	I29A I29B I29C
	09	J11A J11B
	10	K09A K09B
	11	L09A L09B
	12	M06Z M37Z
	13	N11A N11B
	21B	X06A X06B X06C
83.39.12↔	01	B17A B17B
	03	D12A D12B
	04	E02A E02B E02C
	05	F21A F21B F21C
	06	G12A G12B
	07	H06Z
	08	I27A I27B I27C
		I27D
	09	J11A J11B
	10	K09A K09B
	11	L09A L09B
	12	M06Z M37Z
	13	N11A N11B
	21B	X06A X06B X06C
83.39.13↔	01	B17A B17B
	03	D12A D12B
	04	E02A E02B E02C
	05	F21A F21B F21C
	06	G12A G12B
	07	H06Z
	08	I27A I27B I27C
		I27D
	09	J11A J11B
	10	K09A K09B
	11	L09A L09B
	12	M06Z M37Z
	13	N11A N11B
	21B	X06A X06B X06C
83.39.14↔	01	B17A B17B
	03	D12A D12B
	04	E02A E02B E02C
	05	F21A F21B F21C
	06	G12A G12B
	07	H06Z
	08	I27A I27B I27C
		I27D
	09	J11A J11B
	10	K09A K09B

PROC

CHOP	MDC	DRG
	11	L09A L09B
	12	M06Z M37Z
	13	N11A N11B
	21B	X06A X06B X06C
83.39.20↔	01	B17A B17B
	03	D12A D12B
	04	E02A E02B E02C
	05	F21A F21B F21C
	06	G12A G12B
	07	H06Z
	08	I29A I29B I29C
	09	J11A J11B
	10	K09A K09B
	11	L09A L09B
	12	M06Z M37Z
	13	N11A N11B
	21B	X06A X06B X06C
83.39.21↔	01	B17A B17B
	03	D12A D12B
	04	E02A E02B E02C
	05	F21A F21B F21C
	06	G12A G12B
	07	H06Z
	08	I29A I29B I29C
	09	J11A J11B
	10	K09A K09B
	11	L09A L09B
	12	M06Z M37Z
	13	N11A N11B
	21B	X06A X06B X06C
83.39.22↔	01	B17A B17B
	03	D12A D12B
	04	E02A E02B E02C
	05	F21A F21B F21C
	06	G12A G12B
	07	H06Z
	08	I27A I27B I27C
		I27D
	09	J11A J11B
	10	K09A K09B
	11	L09A L09B
	12	M06Z M37Z
	13	N11A N11B
	21B	X06A X06B X06C
83.39.23↔	01	B17A B17B
	03	D12A D12B
	04	E02A E02B E02C
	05	F21A F21B F21C
	06	G12A G12B
	07	H06Z
	08	I27A I27B I27C
		I27D
	09	J11A J11B
	10	K09A K09B
	11	L09A L09B
	12	M06Z M37Z
	13	N11A N11B
	21B	X06A X06B X06C
83.39.24↔	01	B17A B17B
	03	D12A D12B
	04	E02A E02B E02C
	05	F21A F21B F21C
	06	G12A G12B
	07	H06Z
	08	I27A I27B I27C
		I27D
	09	J11A J11B
	10	K09A K09B
	11	L09A L09B
	12	M06Z M37Z
	13	N11A N11B
	21B	X06A X06B X06C
83.41↔		BORP MBOR VAC
		VAC I VAC II VBOR
	01	B17A B17B
	03	D12A D12B
	04	E02A E02B E02C
		E36A E36B
	05	F21A F21B F21C
	06	G12A G12B G16A
		G38A G38B
	07	H06Z
	08	I27A I27B I27C
		I27D
	09	J11A J11B
	10	K09A K09B
	11	L09A L09B
	12	M06Z M37Z
	13	N11A N11B
	21B	X06A X06B X06C
83.42.10↔	01	B17A B17B
	03	D12A D12B
	04	E02A E02B E02C
	05	F21A F21B F21C
	06	G12A G12B
	07	H06Z
	08	I29A I29B I29C
	09	J11A J11B
	10	K09A K09B
	11	L09A L09B
	12	M06Z M37Z
	13	N11A N11B
	21B	X06A X06B X06C
83.42.11↔	01	B17A B17B
	03	D12A D12B
	04	E02A E02B E02C
	05	F21A F21B F21C
	06	G12A G12B
	07	H06Z
	08	I29A I29B I29C
	09	J11A J11B
	10	K09A K09B
	11	L09A L09B
	12	M06Z M37Z
	13	N11A N11B
	21B	X06A X06B X06C
83.42.12↔	01	B17A B17B
	03	D12A D12B
	04	E02A E02B E02C
	05	F21A F21B F21C
	06	G12A G12B
	07	H06Z
	08	I29A I29B I29C
	09	J11A J11B
	10	K09A K09B
	11	L09A L09B
	12	M06Z M37Z
	13	N11A N11B
	21B	X06A X06B X06C
83.42.13↔	01	B17A B17B
	03	D12A D12B
	04	E02A E02B E02C
	05	F21A F21B F21C
	06	G12A G12B
	07	H06Z
	08	I27A I27B I27C
		I27D
	09	J11A J11B
	10	K09A K09B
	11	L09A L09B
	12	M06Z M37Z
	13	N11A N11B
	21B	X06A X06B X06C
83.42.14↔	01	B17A B17B
	03	D12A D12B
	04	E02A E02B E02C
	05	F21A F21B F21C
	06	G12A G12B
	07	H06Z
	08	I27A I27B I27C
		I27D
	09	J11A J11B
	10	K09A K09B
	11	L09A L09B
	12	M06Z M37Z
	13	N11A N11B
	21B	X06A X06B X06C
83.42.15↔	01	B17A B17B
	03	D12A D12B
	04	E02A E02B E02C
	05	F21A F21B F21C
	06	G12A G12B
	07	H06Z
	08	I27A I27B I27C
		I27D
	09	J11A J11B
	10	K09A K09B
	11	L09A L09B
	12	M06Z M37Z
	13	N11A N11B
	21B	X06A X06B X06C
83.42.16↔	01	B17A B17B
	03	D12A D12B
	04	E02A E02B E02C
	05	F21A F21B F21C
	06	G12A G12B
	07	H06Z
	08	I27A I27B I27C
		I27D
	09	J11A J11B
	10	K09A K09B
	11	L09A L09B
	12	M06Z M37Z
	13	N11A N11B
	21B	X06A X06B X06C
83.42.19↔	01	B17A B17B
	03	D12A D12B
	04	E02A E02B E02C
	05	F21A F21B F21C
	06	G12A G12B
	07	H06Z
	08	I27A I27B I27C
		I27D
	09	J11A J11B
	10	K09A K09B
	11	L09A L09B
	12	M06Z M37Z
	13	N11A N11B
	21B	X06A X06B X06C
83.43.10↔		BORP KORP MBOR
		MKOR VAC VAC I
		VAC II VBOR VKOR
	01	B17A B17B
	03	D12A D12B
	04	E36A E36B
	05	F04Z F13A F13B
		F13C F21A F21B
		F21C
	06	G12A G16A G38A
		G38B

CHOP	MDC	DRG
	08	I02A I02B I02C I08A I08B I12A I12B I12C I13A I13B I32A I32B I32C
	09	J02A J02B J04Z J08Z J21Z J22Z
	21B	X04Z X05Z X06A X06B X06C
	22	Y02A Y02B Y02C
	Prä	B61B B61C B61D
83.43.11↔		BORP KORP MBOR MKOR VAC VAC I VAC II VBOR VKOR
	01	B17A B17B
	03	D12A D12B
	04	E36A E36B
	05	F04Z F13A F13B F13C F21A F21B F21C
	06	G12A G16A G38A G38B
	08	I02A I02B I02C I08A I08B I12A I12B I12C I13A I13B I32A I32B I32C
	09	J02A J02B J04Z J08Z J21Z J22Z
	21B	X04Z X05Z X06A X06B X06C
	22	Y02A Y02B Y02C
	Prä	B61B B61C B61D
83.43.12↔		BORP KORP MBOR MKOR VAC VAC I VAC II VB VBOR VKOR
	01	B17A B17B
	03	D02A D02B D24A D24B
	04	E36A E36B
	05	F04Z F13A F13B F13C F21A F21B F21C
	06	G12A G16A G38A G38B
	08	I02A I02B I02C
	09	J01A J01B J02A J02B J04Z J08Z J21Z J22Z
	12	M37Z
	21A	W01A W01B
	21B	X01A X04Z X05Z X06A X06B X06C X07A X07B
	22	Y02A Y02B
83.43.99↔		BORP MBOR VAC VAC I VAC II VBOR
	01	B17A B17B
	03	D12A D12B
	04	E36A E36B
	05	F04Z F13A F13B F13C F21A F21B F21C
	06	G12A G16A G38A G38B
	08	I02A I02B I02C I08A I08B I12A I12B I12C I13A I13B I32A I32B I32C
	09	J02A J02B J04Z J08Z J21Z J22Z
	21B	X04Z X05Z X06A X06B X06C
	22	Y02A Y02B Y02C
	Prä	B61B B61C B61D
83.44.00↔	01	B17A B17B
	03	D12A D12B
	04	E02A E02B E02C
	05	F21A F21B F21C
	06	G12A G12B
	07	H06Z
	08	I27A I27B I27C I27D
	09	J11A J11B
	10	K09A K09B
	11	L09A L09B
	12	M06Z M37Z
	13	N11A N11B
	21B	X06A X06B X06C
83.44.10↔		MBOR VAC VAC I VAC II VBOR
	01	B17A B17B
	03	D12A D12B
	04	E02A E02B E02C
	05	F21A F21B F21C
	06	G12A G12B
	07	H06Z
	08	I29A I29B I29C
	09	J11A J11B
	10	K09A K09B
	11	L09A L09B
	12	M06Z M37Z
	13	N11A N11B
	21B	X06A X06B X06C
83.44.11↔		MBOR VAC VAC I VAC II VBOR
	01	B17A B17B
	03	D12A D12B
	04	E02A E02B E02C
	05	F21A F21B F21C
	06	G12A G12B
	07	H06Z
	08	I29A I29B I29C
	09	J11A J11B
	10	K09A K09B
	11	L09A L09B
	12	M06Z M37Z
	13	N11A N11B
	21B	X06A X06B X06C
83.44.12↔		MBOR VAC VAC I VAC II VBOR
	01	B17A B17B
	03	D12A D12B
	04	E02A E02B E02C
	05	F21A F21B F21C
	06	G12A G12B
	07	H06Z
	08	I29A I29B I29C
	09	J11A J11B
	10	K09A K09B
	11	L09A L09B
	12	M06Z M37Z
	13	N11A N11B
	21B	X06A X06B X06C
83.44.13↔		MBOR VAC VAC I VAC II VBOR
	01	B17A B17B
	03	D12A D12B
	04	E02A E02B E02C
	05	F21A F21B F21C
	06	G12A G12B
	07	H06Z
	08	I27A I27B I27C I27D
	09	J11A J11B
	10	K09A K09B
	11	L09A L09B
	12	M06Z M37Z
	13	N11A N11B
	21B	X06A X06B X06C
83.44.14↔		MBOR VAC VAC I VAC II VBOR
	01	B17A B17B
	03	D12A D12B
	04	E02A E02B E02C
	05	F21A F21B F21C
	06	G12A G12B
	07	H06Z
	08	I27A I27B I27C I27D
	09	J11A J11B
	10	K09A K09B
	11	L09A L09B
	12	M06Z M37Z
	13	N11A N11B
	21B	X06A X06B X06C
83.44.15↔		MBOR VAC VAC I VAC II VBOR
	01	B17A B17B
	03	D12A D12B
	04	E02A E02B E02C
	05	F21A F21B F21C
	06	G12A G12B
	07	H06Z
	08	I27A I27B I27C I27D
	09	J11A J11B
	10	K09A K09B
	11	L09A L09B
	12	M06Z M37Z
	13	N11A N11B
	21B	X06A X06B X06C
83.44.16↔		MBOR VAC VAC I VAC II VBOR
	01	B17A B17B
	03	D12A D12B
	04	E02A E02B E02C
	05	F21A F21B F21C
	06	G12A G12B
	07	H06Z
	08	I27A I27B I27C I27D
	09	J11A J11B
	10	K09A K09B
	11	L09A L09B
	12	M06Z M37Z
	13	N11A N11B
	21B	X06A X06B X06C
83.44.19↔		MBOR VAC VAC I VAC II VBOR
	01	B17A B17B
	03	D12A D12B
	04	E02A E02B E02C
	05	F21A F21B F21C
	06	G12A G12B
	07	H06Z
	08	I27A I27B I27C I27D

PROC

CHOP	MDC	DRG
	09	J11A J11B
	10	K09A K09B
	11	L09A L09B
	12	M06Z M37Z
	13	N11A N11B
	21B	X06A X06B X06C
83.44.99↔	01	B17A B17B
	03	D12A D12B
	04	E02A E02B E02C
	05	F21A F21B F21C
	06	G12A G12B
	07	H06Z
	08	I27A I27B I27C
		I27D
	09	J11A J11B
	10	K09A K09B
	11	L09A L09B
	12	M06Z M37Z
	13	N11A N11B
	21B	X06A X06B X06C
83.45.10↔	01	B17A B17B
	03	D12A D12B
	04	E02A E02B E02C
	05	F21A F21B F21C
	06	G12A G12B
	07	H06Z
	08	I29A I29B I29C
	09	J11A J11B
	10	K09A K09B
	11	L09A L09B
	12	M06Z M37Z
	13	N11A N11B
	21B	X06A X06B X06C
83.45.11↔	01	B17A B17B
	03	D12A D12B
	04	E02A E02B E02C
	05	F21A F21B F21C
	06	G12A G12B
	07	H06Z
	08	I29A I29B I29C
	09	J11A J11B
	10	K09A K09B
	11	L09A L09B
	12	M06Z M37Z
	13	N11A N11B
	21B	X06A X06B X06C
83.45.12↔	01	B17A B17B
	03	D12A D12B
	04	E02A E02B E02C
	05	F21A F21B F21C
	06	G12A G12B
	07	H06Z
	08	I29A I29B I29C
	09	J11A J11B
	10	K09A K09B
	11	L09A L09B
	12	M06Z M37Z
	13	N11A N11B
	21B	X06A X06B X06C
83.45.13↔	01	B17A B17B
	03	D12A D12B
	04	E02A E02B E02C
	05	F21A F21B F21C
	06	G12A G12B
	07	H06Z
	08	I27A I27B I27C
		I27D
	09	J11A J11B
	10	K09A K09B
	11	L09A L09B

CHOP	MDC	DRG
	12	M06Z M37Z
	13	N11A N11B
	21B	X06A X06B X06C
83.45.14↔	01	B17A B17B
	03	D12A D12B
	04	E02A E02B E02C
	05	F21A F21B F21C
	06	G12A G12B
	07	H06Z
	08	I27A I27B I27C
		I27D
	09	J11A J11B
	10	K09A K09B
	11	L09A L09B
	12	M06Z M37Z
	13	N11A N11B
	21B	X06A X06B X06C
83.45.15↔	01	B17A B17B
	03	D12A D12B
	04	E02A E02B E02C
	05	F21A F21B F21C
	06	G12A G12B
	07	H06Z
	08	I27A I27B I27C
		I27D
	09	J11A J11B
	10	K09A K09B
	11	L09A L09B
	12	M06Z M37Z
	13	N11A N11B
	21B	X06A X06B X06C
83.45.16↔	01	B17A B17B
	03	D12A D12B
	04	E02A E02B E02C
	05	F21A F21B F21C
	06	G12A G12B
	07	H06Z
	08	I27A I27B I27C
		I27D
	09	J11A J11B
	10	K09A K09B
	11	L09A L09B
	12	M06Z M37Z
	13	N11A N11B
	21B	X06A X06B X06C
83.45.19↔	01	B17A B17B
	03	D12A D12B
	04	E02A E02B E02C
	05	F21A F21B F21C
	06	G12A G12B
	07	H06Z
	08	I27A I27B I27C
		I27D
	09	J11A J11B
	10	K09A K09B
	11	L09A L09B
	12	M06Z M37Z
	13	N11A N11B
	21B	X06A X06B X06C
83.49.10↔		BORP MBOR VAC
		VAC I VAC II VBOR
	01	B17A B17B
	03	D12A D12B
	04	E02A E02B E02C
		E36A E36B
	05	F21A F21B F21C
	06	G12A G12B G16A
		G38A G38B
	07	H06Z
	08	I27A I27B I27C

CHOP	MDC	DRG
	09	J11A J11B
	10	K09A K09B
	11	L09A L09B
	12	M06Z M37Z
	13	N11A N11B
	21B	X06A X06B X06C
83.49.11↔		BORP MBOR VAC
		VAC I VAC II VBOR
	01	B17A B17B
	03	D12A D12B
	04	E02A E02B E02C
		E36A E36B
	05	F21A F21B F21C
	06	G12A G12B G16A
		G38A G38B
	07	H06Z
	08	I29A I29B I29C
	09	J11A J11B
	10	K09A K09B
	11	L09A L09B
	12	M06Z M37Z
	13	N11A N11B
	21B	X06A X06B X06C
83.49.12↔		BORP MBOR VAC
		VAC I VAC II VBOR
	01	B17A B17B
	03	D12A D12B
	04	E02A E02B E02C
		E36A E36B
	05	F21A F21B F21C
	06	G12A G12B G16A
		G38A G38B
	07	H06Z
	08	I29A I29B I29C
	09	J11A J11B
	10	K09A K09B
	11	L09A L09B
	12	M06Z M37Z
	13	N11A N11B
	21B	X06A X06B X06C
83.49.13↔		BORP MBOR VAC
		VAC I VAC II VBOR
	01	B17A B17B
	03	D12A D12B
	04	E02A E02B E02C
		E36A E36B
	05	F21A F21B F21C
	06	G12A G12B G16A
		G38A G38B
	07	H06Z
	08	I27A I27B I27C
		I27D
	09	J11A J11B
	10	K09A K09B
	11	L09A L09B
	12	M06Z M37Z
	13	N11A N11B
	21B	X06A X06B X06C
83.49.14↔		BORP MBOR VAC
		VAC I VAC II VBOR
	01	B17A B17B
	03	D12A D12B
	04	E02A E02B E02C
		E36A E36B
	05	F21A F21B F21C
	06	G12A G12B G16A
		G38A G38B
	07	H06Z
	08	I27A I27B I27C
		I27D

CHOP	MDC	DRG
	09	J11A J11B
	10	K09A K09B
	11	L09A L09B
	12	M06Z M37Z
	13	N11A N11B
	21B	X06A X06B X06C
83.49.15↔		BORP MBOR VAC
		VAC I VAC II VBOR
	01	B17A B17B
	03	D12A D12B
	04	E02A E02B E02C
		E36A E36B
	05	F21A F21B F21C
	06	G12A G12B G16A
		G38A G38B
	07	H06Z
	08	I27A I27B I27C
		I27D
	09	J11A J11B
	10	K09A K09B
	11	L09A L09B
	12	M06Z M37Z
	13	N11A N11B
	21B	X06A X06B X06C
83.49.16↔		BORP MBOR VAC
		VAC I VAC II VBOR
	01	B17A B17B
	03	D12A D12B
	04	E02A E02B E02C
		E36A E36B
	05	F21A F21B F21C
	06	G12A G12B G16A
		G38A G38B
	07	H06Z
	08	I27A I27B I27C
		I27D
	09	J11A J11B
	10	K09A K09B
	11	L09A L09B
	12	M06Z M37Z
	13	N11A N11B
	21B	X06A X06B X06C
83.49.20↔		BORP MBOR VAC
		VAC I VAC II VBOR
	01	B17A B17B
	03	D12A D12B
	04	E02A E02B E02C
		E36A E36B
	05	F21A F21B F21C
	06	G12A G12B G16A
		G38A G38B
	07	H06Z
	08	I29A I29B I29C
	09	J11A J11B
	10	K09A K09B
	11	L09A L09B
	12	M06Z M37Z
	13	N11A N11B
	21B	X06A X06B X06C
83.49.21↔		BORP MBOR VAC
		VAC I VAC II VBOR
	01	B17A B17B
	03	D12A D12B
	04	E02A E02B E02C
		E36A E36B
	05	F21A F21B F21C
	06	G12A G12B G16A
		G38A G38B
	07	H06Z
	08	I29A I29B I29C

CHOP	MDC	DRG
	09	J11A J11B
	10	K09A K09B
	11	L09A L09B
	12	M06Z M37Z
	13	N11A N11B
	21B	X06A X06B X06C
83.49.22↔		BORP MBOR VAC
		VAC I VAC II VBOR
	01	B17A B17B
	03	D12A D12B
	04	E02A E02B E02C
		E36A E36B
	05	F21A F21B F21C
	06	G12A G12B G16A
		G38A G38B
	07	H06Z
	08	I29A I29B I29C
	09	J11A J11B
	10	K09A K09B
	11	L09A L09B
	12	M06Z M37Z
	13	N11A N11B
	21B	X06A X06B X06C
83.49.23↔		BORP MBOR VAC
		VAC I VAC II VBOR
	01	B17A B17B
	03	D12A D12B
	04	E02A E02B E02C
		E36A E36B
	05	F21A F21B F21C
	06	G12A G12B G16A
		G38A G38B
	07	H06Z
	08	I27A I27B I27C
	09	J11A J11B
	10	K09A K09B
	11	L09A L09B
	12	M06Z M37Z
	13	N11A N11B
	21B	X06A X06B X06C
83.49.24↔		BORP MBOR VAC
		VAC I VAC II VBOR
	01	B17A B17B
	03	D12A D12B
	04	E02A E02B E02C
		E36A E36B
	05	F21A F21B F21C
	06	G12A G12B G16A
		G38A G38B
	07	H06Z
	08	I27A I27B I27C
	09	J11A J11B
	10	K09A K09B
	11	L09A L09B
	12	M06Z M37Z
	13	N11A N11B
	21B	X06A X06B X06C
83.49.25↔		BORP MBOR VAC
		VAC I VAC II VBOR
	01	B17A B17B
	03	D12A D12B
	04	E02A E02B E02C
		E36A E36B
	05	F21A F21B F21C
	06	G12A G12B G16A
		G38A G38B
	07	H06Z
	08	I27A I27B I27C
	09	J11A J11B
	10	K09A K09B

CHOP	MDC	DRG
	11	L09A L09B
	12	M06Z M37Z
	13	N11A N11B
	21B	X06A X06B X06C
83.49.26↔		BORP MBOR VAC
		VAC I VAC II VBOR
	01	B17A B17B
	03	D12A D12B
	04	E02A E02B E02C
		E36A E36B
	05	F21A F21B F21C
	06	G12A G12B G16A
		G38A G38B
	07	H06Z
	08	I27A I27B I27C
	09	J11A J11B
	10	K09A K09B
	11	L09A L09B
	12	M06Z M37Z
	13	N11A N11B
	21B	X06A X06B X06C
83.49.29↔		BORP MBOR VAC
		VAC I VAC II VBOR
	01	B17A B17B
	03	D12A D12B
	04	E02A E02B E02C
		E36A E36B
	05	F21A F21B F21C
	06	G12A G12B G16A
		G38A G38B
	07	H06Z
	08	I27A I27B I27C
		I27D
	09	J11A J11B
	10	K09A K09B
	11	L09A L09B
	12	M06Z M37Z
	13	N11A N11B
	21B	X06A X06B X06C
83.49.30↔		BORP MBOR VAC
		VBOR
	01	B17A B17B
	03	D12A D12B
	04	E02A E02B E02C
		E36A E36B
	05	F21A F21B F21C
	06	G12A G12B G16A
		G38A G38B
	07	H06Z
	08	I29A I29B I29C
	09	J11A J11B
	10	K09A K09B
	11	L09A L09B
	12	M06Z M37Z
	13	N11A N11B
	21B	X06A X06B X06C
83.49.31↔		BORP MBOR VAC
		VBOR
	01	B17A B17B
	03	D12A D12B
	04	E02A E02B E02C
		E36A E36B
	05	F21A F21B F21C
	06	G12A G12B G16A
		G38A G38B
	07	H06Z
	08	I29A I29B I29C
	09	J11A J11B
	10	K09A K09B
	11	L09A L09B

PROC

CHOP	MDC	DRG
	12	M06Z M37Z
	13	N11A N11B
	21B	X06A X06B X06C
83.49.32↔		BORP MBOR VAC VBOR
	01	B17A B17B
	03	D12A D12B
	04	E02A E02B E02C E36A E36B
	05	F21A F21B F21C
	06	G12A G12B G16A G38A G38B
	07	H06Z
	08	I29A I29B I29C
	09	J11A J11B
	10	K09A K09B
	11	L09A L09B
	12	M06Z M37Z
	13	N11A N11B
	21B	X06A X06B X06C
83.49.33↔		BORP MBOR VAC VBOR
	01	B17A B17B
	03	D12A D12B
	04	E02A E02B E02C E36A E36B
	05	F21A F21B F21C
	06	G12A G12B G16A G38A G38B
	07	H06Z
	08	I27A I27B I27C I27D
	09	J11A J11B
	10	K09A K09B
	11	L09A L09B
	12	M06Z M37Z
	13	N11A N11B
	21B	X06A X06B X06C
83.49.34↔		BORP MBOR VAC VBOR
	01	B17A B17B
	03	D12A D12B
	04	E02A E02B E02C E36A E36B
	05	F21A F21B F21C
	06	G12A G12B G16A G38A G38B
	07	H06Z
	08	I27A I27B I27C I27D
	09	J11A J11B
	10	K09A K09B
	11	L09A L09B
	12	M06Z M37Z
	13	N11A N11B
	21B	X06A X06B X06C
83.49.35↔		BORP MBOR VAC VBOR
	01	B17A B17B
	03	D12A D12B
	04	E02A E02B E02C E36A E36B
	05	F21A F21B F21C
	06	G12A G12B G16A G38A G38B
	07	H06Z
	08	I27A I27B I27C I27D
	09	J11A J11B
	10	K09A K09B
	11	L09A L09B
	12	M06Z M37Z
	13	N11A N11B
	21B	X06A X06B X06C
83.49.36↔		BORP MBOR VAC VBOR
	01	B17A B17B
	03	D12A D12B
	04	E02A E02B E02C E36A E36B
	05	F21A F21B F21C
	06	G12A G12B G16A G38A G38B
	07	H06Z
	08	I27A I27B I27C I27D
	09	J11A J11B
	10	K09A K09B
	11	L09A L09B
	12	M06Z M37Z
	13	N11A N11B
	21B	X06A X06B X06C
83.49.39↔		BORP MBOR VAC VBOR
	01	B17A B17B
	03	D12A D12B
	04	E02A E02B E02C E36A E36B
	05	F21A F21B F21C
	06	G12A G12B G16A G38A G38B
	07	H06Z
	08	I27A I27B I27C I27D
	09	J11A J11B
	10	K09A K09B
	11	L09A L09B
	12	M06Z M37Z
	13	N11A N11B
	21B	X06A X06B X06C
83.5X.10↔		BORP MBOR VAC VAC I VAC II VBOR
	01	B17A B17B
	03	D12A D12B
	04	E02A E02B E02C E36A E36B
	05	F21A F21B F21C
	06	G12A G12B G16A G38A G38B
	07	H06Z
	08	I29A I29B I29C
	09	J11A J11B
	10	K09A K09B
	11	L09A L09B
	12	M06Z M37Z
	13	N11A N11B
	21B	X06A X06B X06C
83.5X.11↔		BORP MBOR VAC VAC I VAC II VBOR
	01	B17A B17B
	03	D12A D12B
	04	E02A E02B E02C E36A E36B
	05	F21A F21B F21C
	06	G12A G12B G16A G38A G38B
	07	H06Z
	08	I29A I29B I29C
	09	J11A J11B
	10	K09A K09B
	11	L09A L09B
	12	M06Z M37Z
	13	N11A N11B
	21B	X06A X06B X06C
83.5X.12↔		BORP MBOR VAC VAC I VAC II VBOR
	01	B17A B17B
	03	D12A D12B
	04	E02A E02B E02C E36A E36B
	05	F21A F21B F21C
	06	G12A G12B G16A G38A G38B
	07	H06Z
	08	I29A I29B I29C
	09	J11A J11B
	10	K09A K09B
	11	L09A L09B
	12	M06Z M37Z
	13	N11A N11B
	21B	X06A X06B X06C
83.5X.13↔		BORP MBOR VAC VAC I VAC II VBOR
	01	B17A B17B
	03	D12A D12B
	04	E02A E02B E02C E36A E36B
	05	F21A F21B F21C
	06	G12A G12B G16A G38A G38B
	07	H06Z
	08	I27A I27B I27C I27D
	09	J11A J11B
	10	K09A K09B
	11	L09A L09B
	12	M06Z M37Z
	13	N11A N11B
	21B	X06A X06B X06C
83.5X.14↔		BORP MBOR VAC VAC I VAC II VBOR
	01	B17A B17B
	03	D12A D12B
	04	E02A E02B E02C E36A E36B
	05	F21A F21B F21C
	06	G12A G12B G16A G38A G38B
	07	H06Z
	08	I27A I27B I27C I27D
	09	J11A J11B
	10	K09A K09B
	11	L09A L09B
	12	M06Z M37Z
	13	N11A N11B
	21B	X06A X06B X06C
83.5X.15↔		BORP MBOR VAC VAC I VAC II VBOR
	01	B17A B17B
	03	D12A D12B
	04	E02A E02B E02C E36A E36B
	05	F21A F21B F21C
	06	G12A G12B G16A G38A G38B
	07	H06Z
	08	I27A I27B I27C I27D
	09	J11A J11B

CHOP	MDC	DRG
	10	K09A K09B
	11	L09A L09B
	12	M06Z M37Z
	13	N11A N11B
	21B	X06A X06B X06C
83.5X.16↔		BORP MBOR VAC
		VAC I VAC II VBOR
	01	B17A B17B
	03	D12A D12B
	04	E02A E02B E02C
		E36A E36B
	05	F21A F21B F21C
	06	G12A G12B G16A
		G38A G38B
	07	H06Z
	08	I27A I27B I27C
		I27D
	09	J11A J11B
	10	K09A K09B
	11	L09A L09B
	12	M06Z M37Z
	13	N11A N11B
	21B	X06A X06B X06C
83.5X.19↔		BORP MBOR VAC
		VAC I VAC II VBOR
	01	B17A B17B
	03	D12A D12B
	04	E02A E02B E02C
		E36A E36B
	05	F21A F21B F21C
	06	G12A G12B G16A
		G38A G38B
	07	H06Z
	08	I27A I27B I27C
		I27D
	09	J11A J11B
	10	K09A K09B
	11	L09A L09B
	12	M06Z M37Z
	13	N11A N11B
	21B	X06A X06B X06C
83.61.10↔		BORP MBOR VAC
		VAC I VAC II VBOR
	04	E36A E36B
	06	G12A G16A G38A
		G38B
	08	I29A I29B I29C
	21B	X04Z X05Z X06A
		X06B X06C
83.61.11↔		BORP MBOR VAC
		VAC I VAC II VBOR
	01	B17A B17B
	03	D12A D12B
	04	E02A E02B E02C
		E36A E36B
	05	F21A F21B F21C
	06	G12A G12B G16A
		G38A G38B
	07	H06Z
	08	I29A I29B I29C
	09	J11A J11B
	10	K09A K09B
	11	L09A L09B
	12	M06Z M37Z
	13	N11A N11B
	21B	X06A X06B X06C
83.61.12↔		BORP MBOR VAC
		VAC I VAC II VBOR
	01	B17A B17B
	03	D12A D12B

CHOP	MDC	DRG
	04	E02A E02B E02C
		E36A E36B
	05	F21A F21B F21C
	06	G12A G12B G16A
		G38A G38B
	07	H06Z
	08	I29A I29B I29C
	09	J11A J11B
	10	K09A K09B
	11	L09A L09B
	12	M06Z M37Z
	13	N11A N11B
	21B	X06A X06B X06C
83.61.13↔		BORP MBOR VAC
		VAC I VAC II VBOR
	01	B17A B17B
	03	D12A D12B
	04	E02A E02B E02C
		E36A E36B
	05	F21A F21B F21C
	06	G12A G12B G16A
		G38A G38B
	07	H06Z
	08	I27A I27B I27C
		I27D
	09	J11A J11B
	10	K09A K09B
	11	L09A L09B
	12	M06Z M37Z
	13	N11A N11B
	21B	X06A X06B X06C
83.61.14↔		BORP MBOR VAC
		VAC I VAC II VBOR
	01	B17A B17B
	03	D12A D12B
	04	E02A E02B E02C
		E36A E36B
	05	F21A F21B F21C
	06	G12A G12B G16A
		G38A G38B
	07	H06Z
	08	I27A I27B I27C
		I27D
	09	J11A J11B
	10	K09A K09B
	11	L09A L09B
	12	M06Z M37Z
	13	N11A N11B
	21B	X06A X06B X06C
83.61.15↔		BORP MBOR VAC
		VAC I VAC II VBOR
	01	B17A B17B
	03	D12A D12B
	04	E02A E02B E02C
		E36A E36B
	05	F21A F21B F21C
	06	G12A G12B G16A
		G38A G38B
	07	H06Z
	08	I27A I27B I27C
		I27D
	09	J11A J11B
	10	K09A K09B
	11	L09A L09B
	12	M06Z M37Z
	13	N11A N11B
	21B	X06A X06B X06C
83.61.16↔		BORP MBOR VAC
		VAC I VAC II VBOR
	01	B17A B17B

CHOP	MDC	DRG
	03	D12A D12B
	04	E02A E02B E02C
		E36A E36B
	05	F21A F21B F21C
	06	G12A G12B G16A
		G38A G38B
	07	H06Z
	08	I27A I27B I27C
		I27D
	09	J11A J11B
	10	K09A K09B
	11	L09A L09B
	12	M06Z M37Z
	13	N11A N11B
	21B	X06A X06B X06C
83.61.19↔		BORP MBOR VAC
		VAC I VAC II VBOR
	01	B17A B17B
	03	D12A D12B
	04	E02A E02B E02C
		E36A E36B
	05	F21A F21B F21C
	06	G12A G12B G16A
		G38A G38B
	07	H06Z
	08	I27A I27B I27C
		I27D
	09	J11A J11B
	10	K09A K09B
	11	L09A L09B
	12	M06Z M37Z
	13	N11A N11B
	21B	X06A X06B X06C
83.62.10↔		BORP MBOR VAC
		VAC I VAC II VBOR
	01	B17A B17B
	03	D12A D12B
	04	E02A E02B E02C
		E36A E36B
	05	F21A F21B F21C
	06	G12A G12B G16A
		G38A G38B
	07	H06Z
	08	I29A I29B I29C
	09	J11A J11B
	10	K09A K09B
	11	L09A L09B
	12	M06Z M37Z
	13	N11A N11B
	21B	X06A X06B X06C
83.62.11↔		BORP MBOR VAC
		VAC I VAC II VBOR
	01	B17A B17B
	03	D12A D12B
	04	E02A E02B E02C
		E36A E36B
	05	F21A F21B F21C
	06	G12A G12B G16A
		G38A G38B
	07	H06Z
	08	I29A I29B I29C
	09	J11A J11B
	10	K09A K09B
	11	L09A L09B
	12	M06Z M37Z
	13	N11A N11B
	21B	X06A X06B X06C
83.62.12↔		BORP MBOR VAC
		VAC I VAC II VBOR
	01	B17A B17B

PROC

PROC

CHOP	MDC	DRG
	03	D12A D12B
	04	E02A E02B E02C
		E36A E36B
	05	F21A F21B F21C
	06	G12A G12B G16A
		G38A G38B
	07	H06Z
	08	I29A I29B I29C
	09	J11A J11B
	10	K09A K09B
	11	L09A L09B
	12	M06Z M37Z
	13	N11A N11B
	21B	X06A X06B X06C
83.62.13↔		BORP MBOR VAC
		VAC I VAC II VBOR
	01	B17A B17B
	03	D12A D12B
	04	E02A E02B E02C
		E36A E36B
	05	F21A F21B F21C
	06	G12A G12B G16A
		G38A G38B
	07	H06Z
	08	I27A I27B I27C
		I27D
	09	J11A J11B
	10	K09A K09B
	11	L09A L09B
	12	M06Z M37Z
	13	N11A N11B
	21B	X06A X06B X06C
83.62.14↔		BORP MBOR VAC
		VAC I VAC II VBOR
	01	B17A B17B
	03	D12A D12B
	04	E02A E02B E02C
		E36A E36B
	05	F21A F21B F21C
	06	G12A G12B G16A
		G38A G38B
	07	H06Z
	08	I27A I27B I27C
		I27D
	09	J11A J11B
	10	K09A K09B
	11	L09A L09B
	12	M06Z M37Z
	13	N11A N11B
	21B	X06A X06B X06C
83.62.15↔		BORP MBOR VAC
		VAC I VAC II VBOR
	01	B17A B17B
	03	D12A D12B
	04	E02A E02B E02C
		E36A E36B
	05	F21A F21B F21C
	06	G12A G12B G16A
		G38A G38B
	07	H06Z
	08	I27A I27B I27C
		I27D
	09	J11A J11B
	10	K09A K09B
	11	L09A L09B
	12	M06Z M37Z
	13	N11A N11B
	21B	X06A X06B X06C
83.62.16↔		BORP MBOR VAC
		VAC I VAC II VBOR

CHOP	MDC	DRG
	01	B17A B17B
	03	D12A D12B
	04	E02A E02B E02C
		E36A E36B
	05	F21A F21B F21C
	06	G12A G12B G16A
		G38A G38B
	07	H06Z
	08	I27A I27B I27C
		I27D
	09	J11A J11B
	10	K09A K09B
	11	L09A L09B
	12	M06Z M37Z
	13	N11A N11B
	21B	X06A X06B X06C
83.62.19↔		BORP MBOR VAC
		VAC I VAC II VBOR
	01	B17A B17B
	03	D12A D12B
	04	E02A E02B E02C
		E36A E36B
	05	F21A F21B F21C
	06	G12A G12B G16A
		G38A G38B
	07	H06Z
	08	I27A I27B I27C
		I27D
	09	J11A J11B
	10	K09A K09B
	11	L09A L09B
	12	M06Z M37Z
	13	N11A N11B
	21B	X06A X06B X06C
83.64.10↔		BORP MBOR VAC
		VAC I VAC II VBOR
	01	B17A B17B
	03	D12A D12B
	04	E02A E02B E02C
		E36A E36B
	05	F21A F21B F21C
	06	G12A G12B G16A
		G38A G38B
	07	H06Z
	08	I29A I29B I29C
	09	J11A J11B
	10	K09A K09B
	11	L09A L09B
	12	M06Z M37Z
	13	N11A N11B
	21B	X06A X06B X06C
83.64.11↔		BORP MBOR VAC
		VAC I VAC II VBOR
	01	B17A B17B
	03	D12A D12B
	04	E02A E02B E02C
		E36A E36B
	05	F21A F21B F21C
	06	G12A G12B G16A
		G38A G38B
	07	H06Z
	08	I29A I29B I29C
	09	J11A J11B
	10	K09A K09B
	11	L09A L09B
	12	M06Z M37Z
	13	N11A N11B
	21B	X06A X06B X06C
83.64.12↔		BORP MBOR VAC
		VAC I VAC II VBOR

CHOP	MDC	DRG
	01	B17A B17B
	03	D12A D12B
	04	E02A E02B E02C
		E36A E36B
	05	F21A F21B F21C
	06	G12A G12B G16A
		G38A G38B
	07	H06Z
	08	I29A I29B I29C
	09	J11A J11B
	10	K09A K09B
	11	L09A L09B
	12	M06Z M37Z
	13	N11A N11B
	21B	X06A X06B X06C
83.64.13↔		BORP MBOR VAC
		VAC I VAC II VBOR
	01	B17A B17B
	03	D12A D12B
	04	E02A E02B E02C
		E36A E36B
	05	F21A F21B F21C
	06	G12A G12B G16A
		G38A G38B
	07	H06Z
	08	I27A I27B I27C
		I27D
	09	J11A J11B
	10	K09A K09B
	11	L09A L09B
	12	M06Z M37Z
	13	N11A N11B
	21B	X06A X06B X06C
83.64.14↔		BORP MBOR VAC
		VAC I VAC II VBOR
	01	B17A B17B
	03	D12A D12B
	04	E02A E02B E02C
		E36A E36B
	05	F21A F21B F21C
	06	G12A G12B G16A
		G38A G38B
	07	H06Z
	08	I27A I27B I27C
		I27D
	09	J11A J11B
	10	K09A K09B
	11	L09A L09B
	12	M06Z M37Z
	13	N11A N11B
	21B	X06A X06B X06C
83.64.15↔		BORP MBOR VAC
		VAC I VAC II VBOR
	01	B17A B17B
	03	D12A D12B
	04	E02A E02B E02C
		E36A E36B
	05	F21A F21B F21C
	06	G12A G12B G16A
		G38A G38B
	07	H06Z
	08	I27A I27B I27C
		I27D
	09	J11A J11B
	10	K09A K09B
	11	L09A L09B
	12	M06Z M37Z
	13	N11A N11B
	21B	X06A X06B X06C
83.64.16↔		BORP MBOR VAC

CHOP	MDC	DRG
		VAC I VAC II VBOR
	01	B17A B17B
	03	D12A D12B
	04	E02A E02B E02C
		E36A E36B
	05	F21A F21B F21C
	06	G12A G12B G16A
		G38A G38B
	07	H06Z
	08	I27A I27B I27C
		I27D
	09	J11A J11B
	10	K09A K09B
	11	L09A L09B
	12	M06Z M37Z
	13	N11A N11B
	21B	X06A X06B X06C
83.64.19↔		BORP MBOR VAC
		VAC I VAC II VBOR
	01	B17A B17B
	03	D12A D12B
	04	E02A E02B E02C
		E36A E36B
	05	F21A F21B F21C
	06	G12A G12B G16A
		G38A G38B
	07	H06Z
	08	I27A I27B I27C
		I27D
	09	J11A J11B
	10	K09A K09B
	11	L09A L09B
	12	M06Z M37Z
	13	N11A N11B
	21B	X06A X06B X06C
83.65.10↔	01	B17A B17B
	03	D12A D12B
	04	E02A E02B E02C
	05	F21A F21B F21C
	06	G12A G12B
	07	H06Z
	08	I29A I29B I29C
	09	J11A J11B
	10	K09A K09B
	11	L09A L09B
	12	M06Z M37Z
	13	N11A N11B
	21B	X06A X06B X06C
83.65.11↔	01	B17A B17B
	03	D12A D12B
	04	E02A E02B E02C
	05	F21A F21B F21C
	06	G12A G12B
	07	H06Z
	08	I29A I29B I29C
	09	J11A J11B
	10	K09A K09B
	11	L09A L09B
	12	M06Z M37Z
	13	N11A N11B
	21B	X06A X06B X06C
83.65.12↔	01	B17A B17B
	03	D12A D12B
	04	E02A E02B E02C
	05	F21A F21B F21C
	06	G12A G12B
	07	H06Z
	08	I29A I29B I29C
	09	J11A J11B
	10	K09A K09B

CHOP	MDC	DRG
	11	L09A L09B
	12	M06Z M37Z
	13	N11A N11B
	21B	X06A X06B X06C
83.65.13↔	01	B17A B17B
	03	D12A D12B
	04	E02A E02B E02C
	05	F21A F21B F21C
	06	G12A G12B
	07	H06Z
	08	I27A I27B I27C
		I27D
	09	J11A J11B
	10	K09A K09B
	11	L09A L09B
	12	M06Z M37Z
	13	N11A N11B
	21B	X06A X06B X06C
83.65.14↔	01	B17A B17B
	03	D12A D12B
	04	E02A E02B E02C
	05	F21A F21B F21C
	06	G09E G09F G12A
		G12B
	07	H06Z
	08	I27A I27B I27C
		I27D
	09	J11A J11B
	10	K09A K09B
	11	L09A L09B
	12	M06Z M37Z
	13	N11A N11B
	21B	X06A X06B X06C
83.65.15↔	01	B17A B17B
	03	D12A D12B
	04	E02A E02B E02C
	05	F21A F21B F21C
	06	G12A G12B
	07	H06Z
	08	I27A I27B I27C
		I27D
	09	J11A J11B
	10	K09A K09B
	11	L09A L09B
	12	M06Z M37Z
	13	N11A N11B
	21B	X06A X06B X06C
83.65.16↔	01	B17A B17B
	03	D12A D12B
	04	E02A E02B E02C
	05	F21A F21B F21C
	06	G12A G12B
	07	H06Z
	08	I27A I27B I27C
		I27D
	09	J11A J11B
	10	K09A K09B
	11	L09A L09B
	12	M06Z M37Z
	13	N11A N11B
	21B	X06A X06B X06C
83.71.10↔		BORP MBOR VAC
		VAC I VAC II VBOR
	01	B17A B17B
	04	E36A E36B
	06	G12A G16A G38A
		G38B
	08	I02A I02B I02C
		I08A I08B I12A
		I12B I12C I13A

CHOP	MDC	DRG
		I13B I29A I29B
	21B	X04Z X05Z X06A
		X06B X06C
	Prä	B61B B61C B61D
83.71.11↔		BORP MBOR VAC
		VAC I VAC II VBOR
	01	B17A B17B
	04	E36A E36B
	06	G12A G16A G38A
		G38B
	08	I02A I02B I02C
		I08A I08B I12A
		I12B I12C I13A
		I13B I29A I29B
	21B	X04Z X05Z X06A
		X06B X06C
	Prä	B61B B61C B61D
83.71.12↔		BORP MBOR VAC
		VAC I VAC II VBOR
	01	B17A B17B
	04	E36A E36B
	06	G12A G16A G38A
		G38B
	08	I02A I02B I02C
		I08A I08B I12A
		I12B I12C I13A
		I13B I29A I29B
	21B	X04Z X05Z X06A
		X06B X06C
	Prä	B61B B61C B61D
83.71.13↔		BORP MBOR VAC
		VAC I VAC II VBOR
	01	B17A B17B
	04	E36A E36B
	06	G12A G16A G38A
		G38B
	08	I02A I02B I02C
		I08A I08B I12A
		I12B I12C I13A
		I13B I27A I27B
		I27C I27D
	21B	X04Z X05Z X06A
		X06B X06C
	Prä	B61B B61C B61D
83.71.14↔		BORP MBOR VAC
		VAC I VAC II VBOR
	01	B17A B17B
	04	E36A E36B
	06	G12A G16A G38A
		G38B
	08	I02A I02B I02C
		I08A I08B I12A
		I12B I12C I13A
		I13B I27A I27B
		I27C I27D
	21B	X04Z X05Z X06A
		X06B X06C
	Prä	B61B B61C B61D
83.71.15↔		BORP MBOR VAC
		VAC I VAC II VBOR
	01	B17A B17B
	04	E36A E36B
	06	G12A G16A G38A
		G38B
	08	I02A I02B I02C
		I08A I08B I12A
		I12B I12C I13A
		I13B I27A I27B
		I27C I27D
	21B	X04Z X05Z X06A

PROC

CHOP	MDC	DRG
		X06B X06C
	Prä	B61B B61C B61D
83.71.16↔		BORP MBOR VAC
		VAC I VAC II VBOR
	01	B17A B17B
	04	E36A E36B
	06	G12A G16A G38A
		G38B
	08	I02A I02B I02C
		I08A I08B I12A
		I12B I12C I13A
		I13B I27A I27B
		I27C I27D
	21B	X04Z X05Z X06A
		X06B X06C
	Prä	B61B B61C B61D
83.71.19↔		BORP MBOR VAC
		VAC I VAC II VBOR
	01	B17A B17B
	04	E36A E36B
	06	G12A G16A G38A
		G38B
	08	I02A I02B I02C
		I08A I08B I12A
		I12B I12C I13A
		I13B I27A I27B
		I27C I27D
	21B	X04Z X05Z X06A
		X06B X06C
	Prä	B61B B61C B61D
83.71.99↔		BORP MBOR VAC
		VAC I VAC II VBOR
	01	B17A B17B
	04	E36A E36B
	06	G12A G16A G38A
		G38B
	08	I02A I02B I02C
		I08A I08B I12A
		I12B I12C I13A
		I13B I27A I27B
		I27C I27D
	21B	X04Z X05Z X06A
		X06B X06C
	Prä	B61B B61C B61D
83.72.10↔		BORP MBOR VAC
		VAC I VAC II VBOR
	01	B17A B17B
	03	D12A D12B
	04	E02A E02B E02C
		E36A E36B
	05	F21A F21B F21C
	06	G12A G12B G16A
		G38A G38B
	07	H06Z
	08	I29A I29B I29C
	09	J11A J11B
	10	K09A K09B
	11	L09A L09B
	12	M06Z M37Z
	13	N11A N11B
	21B	X06A X06B X06C
83.72.11↔		BORP MBOR VAC
		VAC I VAC II VBOR
	01	B17A B17B
	03	D12A D12B
	04	E02A E02B E02C
		E36A E36B
	05	F21A F21B F21C
	06	G12A G12B G16A
		G38A G38B
	07	H06Z
	08	I29A I29B I29C
	09	J11A J11B
	10	K09A K09B
	11	L09A L09B
	12	M06Z M37Z
	13	N11A N11B
	21B	X06A X06B X06C
83.72.12↔		BORP MBOR VAC
		VAC I VAC II VBOR
	01	B17A B17B
	03	D12A D12B
	04	E02A E02B E02C
		E36A E36B
	05	F21A F21B F21C
	06	G12A G12B G16A
		G38A G38B
	07	H06Z
	08	I29A I29B I29C
	09	J11A J11B
	10	K09A K09B
	11	L09A L09B
	12	M06Z M37Z
	13	N11A N11B
	21B	X06A X06B X06C
83.72.13↔		BORP MBOR VAC
		VAC I VAC II VBOR
	01	B17A B17B
	03	D12A D12B
	04	E02A E02B E02C
		E36A E36B
	05	F21A F21B F21C
	06	G12A G12B G16A
		G38A G38B
	07	H06Z
	08	I27A I27B I27C
		I27D
	09	J11A J11B
	10	K09A K09B
	11	L09A L09B
	12	M06Z M37Z
	13	N11A N11B
	21B	X06A X06B X06C
83.72.14↔		BORP MBOR VAC
		VAC I VAC II VBOR
	01	B17A B17B
	03	D12A D12B
	04	E02A E02B E02C
		E36A E36B
	05	F21A F21B F21C
	06	G12A G12B G16A
		G38A G38B
	07	H06Z
	08	I27A I27B I27C
		I27D
	09	J11A J11B
	10	K09A K09B
	11	L09A L09B
	12	M06Z M37Z
	13	N11A N11B
	21B	X06A X06B X06C
83.72.15↔		BORP MBOR VAC
		VAC I VAC II VBOR
	01	B17A B17B
	03	D12A D12B
	04	E02A E02B E02C
		E36A E36B
	05	F21A F21B F21C
	06	G12A G12B G16A
		G38A G38B
	07	H06Z
	08	I27A I27B I27C
		I27D
	09	J11A J11B
	10	K09A K09B
	11	L09A L09B
	12	M06Z M37Z
	13	N11A N11B
	21B	X06A X06B X06C
83.72.16↔		BORP MBOR VAC
		VAC I VAC II VBOR
	01	B17A B17B
	03	D12A D12B
	04	E02A E02B E02C
		E36A E36B
	05	F21A F21B F21C
	06	G12A G12B G16A
		G38A G38B
	07	H06Z
	08	I27A I27B I27C
		I27D
	09	J11A J11B
	10	K09A K09B
	11	L09A L09B
	12	M06Z M37Z
	13	N11A N11B
	21B	X06A X06B X06C
83.73.10↔		BORP MBOR VAC
		VAC I VAC II VBOR
	01	B17A B17B
	03	D12A D12B
	04	E02A E02B E02C
		E36A E36B
	05	F21A F21B F21C
	06	G12A G12B G16A
		G38A G38B
	07	H06Z
	08	I29A I29B I29C
	09	J11A J11B
	10	K09A K09B
	11	L09A L09B
	12	M06Z M37Z
	13	N11A N11B
	21B	X06A X06B X06C
83.73.11↔		BORP MBOR VAC
		VAC I VAC II VBOR
	01	B17A B17B
	03	D12A D12B
	04	E02A E02B E02C
		E36A E36B
	05	F21A F21B F21C
	06	G12A G12B G16A
		G38A G38B
	07	H06Z
	08	I29A I29B I29C
	09	J11A J11B
	10	K09A K09B
	11	L09A L09B
	12	M06Z M37Z
	13	N11A N11B
	21B	X06A X06B X06C
83.73.12↔		BORP MBOR VAC
		VAC I VAC II VBOR
	01	B17A B17B
	03	D12A D12B
	04	E02A E02B E02C
		E36A E36B
	05	F21A F21B F21C
	06	G12A G12B G16A
		G38A G38B

CHOP	MDC	DRG
	07	H06Z
	08	I29A I29B I29C
	09	J11A J11B
	10	K09A K09B
	11	L09A L09B
	12	M06Z M37Z
	13	N11A N11B
	21B	X06A X06B X06C
83.73.13↔		BORP MBOR VAC
		VAC I VAC II VBOR
	01	B17A B17B
	03	D12A D12B
	04	E02A E02B E02C
		E36A E36B
	05	F21A F21B F21C
	06	G12A G12B G16A
		G38A G38B
	07	H06Z
	08	I27A I27B I27C
	09	J11A J11B
	10	K09A K09B
	11	L09A L09B
	12	M06Z M37Z
	13	N11A N11B
	21B	X06A X06B X06C
83.73.14↔		BORP MBOR VAC
		VAC I VAC II VBOR
	01	B17A B17B
	03	D12A D12B
	04	E02A E02B E02C
		E36A E36B
	05	F21A F21B F21C
	06	G12A G12B G16A
		G38A G38B
	07	H06Z
	08	I27A I27B I27C
	09	J11A J11B
	10	K09A K09B
	11	L09A L09B
	12	M06Z M37Z
	13	N11A N11B
	21B	X06A X06B X06C
83.73.15↔		BORP MBOR VAC
		VAC I VAC II VBOR
	01	B17A B17B
	03	D12A D12B
	04	E02A E02B E02C
		E36A E36B
	05	F21A F21B F21C
	06	G12A G12B G16A
		G38A G38B
	07	H06Z
	08	I27A I27B I27C
	09	J11A J11B
	10	K09A K09B
	11	L09A L09B
	12	M06Z M37Z
	13	N11A N11B
	21B	X06A X06B X06C
83.73.16↔		BORP MBOR VAC
		VAC I VAC II VBOR
	01	B17A B17B
	03	D12A D12B
	04	E02A E02B E02C
		E36A E36B
	05	F21A F21B F21C
	06	G12A G12B G16A
		G38A G38B
	07	H06Z
	08	I27A I27B I27C
	09	J11A J11B
	10	K09A K09B
	11	L09A L09B
	12	M06Z M37Z
	13	N11A N11B
	21B	X06A X06B X06C
83.73.19↔		BORP MBOR VAC
		VAC I VAC II VBOR
	01	B17A B17B
	03	D12A D12B
	04	E02A E02B E02C
		E36A E36B
	05	F21A F21B F21C
	06	G12A G12B G16A
		G38A G38B
	07	H06Z
	08	I27A I27B I27C
		I27D
	09	J11A J11B
	10	K09A K09B
	11	L09A L09B
	12	M06Z M37Z
	13	N11A N11B
	21B	X06A X06B X06C
83.74.10↔		BORP MBOR VAC
		VAC I VAC II VBOR
	01	B17A B17B
	03	D12A D12B
	04	E02A E02B E02C
		E36A E36B
	05	F21A F21B F21C
	06	G12A G12B G16A
		G38A G38B
	07	H06Z
	08	I29A I29B I29C
	09	J11A J11B
	10	K09A K09B
	11	L09A L09B
	12	M06Z M37Z
	13	N11A N11B
	21B	X06A X06B X06C
83.74.11↔		BORP MBOR VAC
		VAC I VAC II VBOR
	01	B17A B17B
	03	D12A D12B
	04	E02A E02B E02C
		E36A E36B
	05	F21A F21B F21C
	06	G12A G12B G16A
		G38A G38B
	07	H06Z
	08	I29A I29B I29C
	09	J11A J11B
	10	K09A K09B
	11	L09A L09B
	12	M06Z M37Z
	13	N11A N11B
	21B	X06A X06B X06C
83.74.12↔		BORP MBOR VAC
		VAC I VAC II VBOR
	01	B17A B17B
	03	D12A D12B
	04	E02A E02B E02C
		E36A E36B
	05	F21A F21B F21C
	06	G12A G12B G16A
		G38A G38B
	07	H06Z
	08	I29A I29B I29C
	09	J11A J11B
	10	K09A K09B
	11	L09A L09B
	12	M06Z M37Z
	13	N11A N11B
	21B	X06A X06B X06C
83.74.13↔		BORP MBOR VAC
		VAC I VAC II VBOR
	01	B17A B17B
	03	D12A D12B
	04	E02A E02B E02C
		E36A E36B
	05	F21A F21B F21C
	06	G12A G12B G16A
		G38A G38B
	07	H06Z
	08	I27A I27B I27C
	09	J11A J11B
	10	K09A K09B
	11	L09A L09B
	12	M06Z M37Z
	13	N11A N11B
	21B	X06A X06B X06C
83.74.14↔		BORP MBOR VAC
		VAC I VAC II VBOR
	01	B17A B17B
	03	D12A D12B
	04	E02A E02B E02C
		E36A E36B
	05	F21A F21B F21C
	06	G12A G12B G16A
		G38A G38B
	07	H06Z
	08	I27A I27B I27C
	09	J11A J11B
	10	K09A K09B
	11	L09A L09B
	12	M06Z M37Z
	13	N11A N11B
	21B	X06A X06B X06C
83.74.15↔		BORP MBOR VAC
		VAC I VAC II VBOR
	01	B17A B17B
	03	D12A D12B
	04	E02A E02B E02C
		E36A E36B
	05	F21A F21B F21C
	06	G12A G12B G16A
		G38A G38B
	07	H06Z
	08	I27A I27B I27C
	09	J11A J11B
	10	K09A K09B
	11	L09A L09B
	12	M06Z M37Z
	13	N11A N11B
	21B	X06A X06B X06C
83.74.16↔		BORP MBOR VAC
		VAC I VAC II VBOR
	01	B17A B17B
	03	D12A D12B
	04	E02A E02B E02C
		E36A E36B
	05	F21A F21B F21C
	06	G12A G12B G16A
		G38A G38B
	07	H06Z
	08	I27A I27B I27C
	09	J11A J11B
	10	K09A K09B
	11	L09A L09B

PROC

CHOP	MDC	DRG
	12	M06Z M37Z
	13	N11A N11B
	21B	X06A X06B X06C
83.74.19↔		BORP MBOR VAC
		VAC I VAC II VBOR
	01	B17A B17B
	03	D12A D12B
	04	E02A E02B E02C
		E36A E36B
	05	F21A F21B F21C
	06	G12A G12B G16A
		G38A G38B
	07	H06Z
	08	I27A I27B I27C
		I27D
	09	J11A J11B
	10	K09A K09B
	11	L09A L09B
	12	M06Z M37Z
	13	N11A N11B
	21B	X06A X06B X06C
83.76.10↔		BORP MBOR VAC
		VAC I VAC II VBOR
	01	B17A B17B
	04	E36A E36B
	06	G12A G16A G38A
		G38B
	08	I02A I02B I02C
		I08A I08B I12A
		I12B I12C I13A
		I13B I29A I29B
	21B	X04Z X05Z X06A
		X06B X06C
	Prä	B61B B61C B61D
83.76.11↔		BORP MBOR VAC
		VAC I VAC II VBOR
	01	B17A B17B
	04	E36A E36B
	06	G12A G16A G38A
		G38B
	08	I02A I02B I02C
		I08A I08B I12A
		I12B I12C I13A
		I13B I29A I29B
	21B	X04Z X05Z X06A
		X06B X06C
	Prä	B61B B61C B61D
83.76.12↔		BORP MBOR VAC
		VAC I VAC II VBOR
	01	B17A B17B
	04	E36A E36B
	06	G12A G16A G38A
		G38B
	08	I02A I02B I02C
		I08A I08B I12A
		I12B I12C I13A
		I13B I29A I29B
	21B	X04Z X05Z X06A
		X06B X06C
	Prä	B61B B61C B61D
83.76.13↔		BORP MBOR VAC
		VAC I VAC II VBOR
	01	B17A B17B
	04	E36A E36B
	06	G12A G16A G38A
		G38B
	08	I02A I02B I02C
		I08A I08B I12A
		I12B I12C I13A
		I13B I27A I27B

CHOP	MDC	DRG
		I27C
	21B	X04Z X05Z X06A
		X06B X06C
	Prä	B61B B61C B61D
83.76.14↔		BORP MBOR VAC
		VAC I VAC II VBOR
	01	B17A B17B
	04	E36A E36B
	06	G12A G16A G38A
		G38B
	08	I02A I02B I02C
		I08A I08B I12A
		I12B I12C I13A
		I13B I27A I27B
		I27C
	21B	X04Z X05Z X06A
		X06B X06C
	Prä	B61B B61C B61D
83.76.15↔		BORP MBOR VAC
		VAC I VAC II VBOR
	01	B17A B17B
	04	E36A E36B
	06	G12A G16A G38A
		G38B
	08	I02A I02B I02C
		I08A I08B I12A
		I12B I12C I13A
		I13B I27A I27B
		I27C
	21B	X04Z X05Z X06A
		X06B X06C
	Prä	B61B B61C B61D
83.76.16↔		BORP MBOR VAC
		VAC I VAC II VBOR
	01	B17A B17B
	04	E36A E36B
	06	G12A G16A G38A
		G38B
	08	I02A I02B I02C
		I08A I08B I12A
		I12B I12C I13A
		I13B I27A I27B
		I27C
	21B	X04Z X05Z X06A
		X06B X06C
	Prä	B61B B61C B61D
83.76.19↔		BORP MBOR VAC
		VAC I VAC II VBOR
	01	B17A B17B
	04	E36A E36B
	06	G12A G16A G38A
		G38B
	08	I02A I02B I02C
		I08A I08B I12A
		I12B I12C I13A
		I13B I27A I27B
		I27C I27D
	21B	X04Z X05Z X06A
		X06B X06C
	Prä	B61B B61C B61D
83.77.10↔		BORP MBOR VAC
		VAC I VAC II VBOR
	01	B17A B17B
	03	D12A D12B
	04	E02A E02B E02C
		E36A E36B
	05	F21A F21B F21C
	06	G12A G12B G16A
		G38A G38B
	07	H06Z

CHOP	MDC	DRG
	08	I29A I29B I29C
	09	J11A J11B
	10	K09A K09B
	11	L09A L09B
	12	M06Z M37Z
	13	N11A N11B
	21B	X06A X06B X06C
83.77.11↔		BORP MBOR VAC
		VAC I VAC II VBOR
	01	B17A B17B
	03	D12A D12B
	04	E02A E02B E02C
		E36A E36B
	05	F21A F21B F21C
	06	G12A G12B G16A
		G38A G38B
	07	H06Z
	08	I29A I29B I29C
	09	J11A J11B
	10	K09A K09B
	11	L09A L09B
	12	M06Z M37Z
	13	N11A N11B
	21B	X06A X06B X06C
83.77.12↔		BORP MBOR VAC
		VAC I VAC II VBOR
	01	B17A B17B
	03	D12A D12B
	04	E02A E02B E02C
		E36A E36B
	05	F21A F21B F21C
	06	G12A G12B G16A
		G38A G38B
	07	H06Z
	08	I29A I29B I29C
	09	J11A J11B
	10	K09A K09B
	11	L09A L09B
	12	M06Z M37Z
	13	N11A N11B
	21B	X06A X06B X06C
83.77.13↔		BORP MBOR VAC
		VAC I VAC II VBOR
	01	B17A B17B
	03	D12A D12B
	04	E02A E02B E02C
		E36A E36B
	05	F21A F21B F21C
	06	G12A G12B G16A
		G38A G38B
	07	H06Z
	08	I27A I27B I27C
	09	J11A J11B
	10	K09A K09B
	11	L09A L09B
	12	M06Z M37Z
	13	N11A N11B
	21B	X06A X06B X06C
83.77.14↔		BORP MBOR VAC
		VAC I VAC II VBOR
	01	B17A B17B
	03	D12A D12B
	04	E02A E02B E02C
		E36A E36B
	05	F21A F21B F21C
	06	G12A G12B G16A
		G38A G38B
	07	H06Z
	08	I27A I27B I27C
	09	J11A J11B

CHOP	MDC	DRG
	10	K09A K09B
	11	L09A L09B
	12	M06Z M37Z
	13	N11A N11B
	21B	X06A X06B X06C
83.77.15↔		BORP MBOR VAC
		VAC I VAC II VBOR
	01	B17A B17B
	03	D12A D12B
	04	E02A E02B E02C
		E36A E36B
	05	F21A F21B F21C
	06	G12A G12B G16A
		G38A G38B
	07	H06Z
	08	I27A I27B I27C
	09	J11A J11B
	10	K09A K09B
	11	L09A L09B
	12	M06Z M37Z
	13	N11A N11B
	21B	X06A X06B X06C
83.77.16↔		BORP MBOR VAC
		VAC I VAC II VBOR
	01	B17A B17B
	03	D12A D12B
	04	E02A E02B E02C
		E36A E36B
	05	F21A F21B F21C
	06	G12A G12B G16A
		G38A G38B
	07	H06Z
	08	I27A I27B I27C
	09	J11A J11B
	10	K09A K09B
	11	L09A L09B
	12	M06Z M37Z
	13	N11A N11B
	21B	X06A X06B X06C
83.77.19↔		BORP MBOR VAC
		VAC I VAC II VBOR
	01	B17A B17B
	03	D12A D12B
	04	E02A E02B E02C
		E36A E36B
	05	F21A F21B F21C
	06	G12A G12B G16A
		G38A G38B
	07	H06Z
	08	I27A I27B I27C
		I27D
	09	J11A J11B
	10	K09A K09B
	11	L09A L09B
	12	M06Z M37Z
	13	N11A N11B
	21B	X06A X06B X06C
83.78.10↔		BORP MBOR VAC
		VAC I VAC II VBOR
	01	B17A B17B
	04	E36A E36B
	05	F04Z F13A F13B
		F13C
	06	G12A G16A G38A
		G38B
	08	I02A I02B I02C
		I08A I08B I12A
		I12B I12C I13A
		I13B I29A I29B
	10	K09A K09B

CHOP	MDC	DRG
	21B	X04Z X05Z X06A
		X06B X06C
	Prä	B61B B61C B61D
83.78.11↔		BORP MBOR VAC
		VAC I VAC II VBOR
	01	B17A B17B
	04	E36A E36B
	05	F04Z F13A F13B
		F13C
	06	G12A G16A G38A
		G38B
	08	I02A I02B I02C
		I08A I08B I12A
		I12B I12C I13A
		I13B I29A I29B
	10	K09A K09B
	21B	X04Z X05Z X06A
		X06B X06C
	Prä	B61B B61C B61D
83.78.12↔		BORP MBOR VAC
		VAC I VAC II VBOR
	01	B17A B17B
	04	E36A E36B
	05	F04Z F13A F13B
		F13C
	06	G12A G16A G38A
		G38B
	08	I02A I02B I02C
		I08A I08B I12A
		I12B I12C I13A
		I13B I29A I29B
	10	K09A K09B
	21B	X04Z X05Z X06A
		X06B X06C
	Prä	B61B B61C B61D
83.78.13↔		BORP MBOR VAC
		VAC I VAC II VBOR
	01	B17A B17B
	04	E36A E36B
	05	F04Z F13A F13B
		F13C
	06	G12A G16A G38A
		G38B
	08	I02A I02B I02C
		I08A I08B I12A
		I12B I12C I13A
		I13B I27A I27B
		I27C
	10	K09A K09B
	21B	X04Z X05Z X06A
		X06B X06C
	Prä	B61B B61C B61D
83.78.14↔		BORP MBOR VAC
		VAC I VAC II VBOR
	01	B17A B17B
	04	E36A E36B
	05	F04Z F13A F13B
		F13C
	06	G12A G16A G38A
		G38B
	08	I02A I02B I02C
		I08A I08B I12A
		I12B I12C I13A
		I13B I27A I27B
		I27C
	10	K09A K09B
	21B	X04Z X05Z X06A
		X06B X06C
	Prä	B61B B61C B61D
83.78.15↔		BORP MBOR VAC

CHOP	MDC	DRG
		VAC I VAC II VBOR
	01	B17A B17B
	04	E36A E36B
	05	F04Z F13A F13B
		F13C
	06	G12A G16A G38A
		G38B
	08	I02A I02B I02C
		I08A I08B I12A
		I12B I12C I13A
		I13B I27A I27B
		I27C
	10	K09A K09B
	21B	X04Z X05Z X06A
		X06B X06C
	Prä	B61B B61C B61D
83.78.16↔		BORP MBOR VAC
		VAC I VAC II VBOR
	01	B17A B17B
	04	E36A E36B
	05	F04Z F13A F13B
		F13C
	06	G12A G16A G38A
		G38B
	08	I02A I02B I02C
		I08A I08B I12A
		I12B I12C I13A
		I13B I20A I20B
		I20C I20D I27A
		I27B I27C
	10	K09A K09B
	21B	X04Z X05Z X06A
		X06B X06C
	Prä	B61B B61C B61D
83.78.19↔		BORP MBOR VAC
		VAC I VAC II VBOR
	01	B17A B17B
	04	E36A E36B
	05	F04Z F13A F13B
		F13C
	06	G12A G16A G38A
		G38B
	08	I02A I02B I02C
		I08A I08B I12A
		I12B I12C I13A
		I13B I27A I27B
		I27C I27D
	10	K09A K09B
	21B	X04Z X05Z X06A
		X06B X06C
	Prä	B61B B61C B61D
83.79↔		BORP MBOR VAC
		VAC I VAC II VBOR
	01	B17A B17B
	04	E36A E36B
	05	F04Z F13A F13B
		F13C
	06	G12A G16A G38A
		G38B
	08	I02A I02B I02C
		I08A I08B I12A
		I12B I12C I13A
		I13B I27A I27B
		I27C I27D
	10	K09A K09B
	21B	X06A X06B X06C
	Prä	B61B B61C B61D
83.81.10↔		BORP MBOR VAC
		VAC I VAC II VBOR
	01	B17A B17B

PROC

PROC

CHOP	MDC	DRG
	04	E36A E36B
	05	F04Z F13A F13B F13C
	06	G12A G16A G38A G38B
	08	I02A I02B I02C I08A I08B I12A I12B I12C I13A I13B I29A I29B
	10	K09A K09B
	21B	X04Z X05Z X06A X06B X06C
	Prä	B61B B61C B61D
83.81.11↔		BORP MBOR VAC VAC I VAC II VBOR
	01	B17A B17B
	04	E36A E36B
	05	F04Z F13A F13B F13C
	06	G12A G16A G38A G38B
	08	I02A I02B I02C I08A I08B I12A I12B I12C I13A I13B I29A I29B
	10	K09A K09B
	21B	X04Z X05Z X06A X06B X06C
	Prä	B61B B61C B61D
83.81.12↔		BORP MBOR VAC VAC I VAC II VBOR
	01	B17A B17B
	04	E36A E36B
	05	F04Z F13A F13B F13C
	06	G12A G16A G38A G38B
	08	I02A I02B I02C I08A I08B I12A I12B I12C I13A I13B I29A I29B
	10	K09A K09B
	21B	X04Z X05Z X06A X06B X06C
	Prä	B61B B61C B61D
83.81.13↔		BORP MBOR VAC VAC I VAC II VBOR
	01	B17A B17B
	04	E36A E36B
	05	F04Z F13A F13B F13C
	06	G12A G16A G38A G38B
	08	I02A I02B I02C I08A I08B I12A I12B I12C I13A I13B I27A I27B I27C
	10	K09A K09B
	21B	X04Z X05Z X06A X06B X06C
	Prä	B61B B61C B61D
83.81.14↔		BORP MBOR VAC VAC I VAC II VBOR
	01	B17A B17B
	04	E36A E36B
	05	F04Z F13A F13B F13C
	06	G12A G16A G38A G38B
	08	I02A I02B I02C I08A I08B I12A I12B I12C I13A I13B I27A I27B I27C
	10	K09A K09B
	21B	X04Z X05Z X06A X06B X06C
	Prä	B61B B61C B61D
83.81.15↔		BORP MBOR VAC VAC I VAC II VBOR
	01	B17A B17B
	04	E36A E36B
	05	F04Z F13A F13B F13C
	06	G12A G16A G38A G38B
	08	I02A I02B I02C I08A I08B I12A I12B I12C I13A I13B I27A I27B I27C
	10	K09A K09B
	21B	X04Z X05Z X06A X06B X06C
	Prä	B61B B61C B61D
83.81.16↔		BORP MBOR VAC VAC I VAC II VBOR
	01	B17A B17B
	04	E36A E36B
	05	F04Z F13A F13B F13C
	06	G12A G16A G38A G38B
	08	I02A I02B I02C I08A I08B I12A I12B I12C I13A I13B I20A I20B I20C I20D I27A I27B I27C
	10	K09A K09B
	21B	X04Z X05Z X06A X06B X06C
	Prä	B61B B61C B61D
83.81.19↔		BORP MBOR VAC VAC I VAC II VBOR
	01	B17A B17B
	04	E36A E36B
	05	F04Z F13A F13B F13C
	06	G12A G16A G38A G38B
	08	I02A I02B I02C I08A I08B I12A I12B I12C I13A I13B I27A I27B I27C I27D
	10	K09A K09B
	21B	X04Z X05Z X06A X06B X06C
	Prä	B61B B61C B61D
83.82.10↔		BORP MBOR VAC VAC I VAC II VBOR
	01	B17A B17B
	03	D12A
	04	E36A E36B
	05	F04Z F13A F13B F13C F21A F21B F21C
	06	G12A G16A G38A G38B
	08	I02A I02B I02C I08A I08B I12A I12B I12C I13A I13B I22Z I29A I29B I32C I50Z
	09	J02A J02B J04Z J08Z J21Z J22Z
	21B	X01A X01B X05Z X06A X06B X06C X07A X07B
	Prä	B61B B61C B61D
83.82.11↔		BORP MBOR VAC VAC I VAC II VBOR
	01	B17A B17B
	03	D12A
	04	E36A E36B
	05	F04Z F13A F13B F13C F21A F21B F21C
	06	G12A G16A G38A G38B
	08	I02A I02B I02C I08A I08B I12A I12B I12C I13A I13B I22Z I29A I29B I32C I50Z
	09	J02A J02B J04Z J08Z J21Z J22Z
	21B	X01A X01B X05Z X06A X06B X06C X07A X07B
	Prä	B61B B61C B61D
83.82.12↔		BORP MBOR VAC VAC I VAC II VBOR
	01	B17A B17B
	03	D12A
	04	E36A E36B
	05	F04Z F13A F13B F13C F21A F21B F21C
	06	G12A G16A G38A G38B
	08	I02A I02B I02C I08A I08B I12A I12B I12C I13A I13B I22Z I29A I29B I32C I50Z
	09	J02A J02B J04Z J08Z J21Z J22Z
	21B	X01A X01B X05Z X06A X06B X06C X07A X07B
	Prä	B61B B61C B61D
83.82.13↔		BORP MBOR VAC VAC I VAC II VBOR
	01	B17A B17B
	03	D12A
	04	E36A E36B
	05	F04Z F13A F13B F13C F21A F21B F21C
	06	G12A G16A G38A G38B
	08	I02A I02B I02C I08A I08B I12A I12B I12C I13A I13B I22Z I27A I27B I27C I27D I32A I32B I32C

CHOP	MDC	DRG
		I50Z
	09	J02A J02B J04Z
		J08Z J21Z J22Z
	21B	X01A X01B X05Z
		X06A X06B X06C
		X07A X07B
	Prä	B61B B61C B61D
83.82.14↔		BORP MBOR VAC
		VAC I VAC II VBOR
	01	B17A B17B
	03	D12A
	04	E36A E36B
	05	F04Z F13A F13B
		F13C F21A F21B
		F21C
	06	G12A G16A G38A
		G38B
	08	I02A I02B I02C
		I08A I08B I12A
		I12B I12C I13A
		I13B I22Z I27A
		I27B I27C I27D
		I32C I50Z
	09	J02A J02B J04Z
		J08Z J21Z J22Z
	21B	X01A X01B X05Z
		X06A X06B X06C
		X07A X07B
	Prä	B61B B61C B61D
83.82.15↔		BORP MBOR VAC
		VAC I VAC II VBOR
	01	B17A B17B
	03	D12A
	04	E36A E36B
	05	F04Z F13A F13B
		F13C F21A F21B
		F21C
	06	G12A G16A G38A
		G38B
	08	I02A I02B I02C
		I08A I08B I12A
		I12B I12C I13A
		I13B I22Z I27A
		I27B I27C I27D
		I32C I50Z
	09	J02A J02B J04Z
		J08Z J21Z J22Z
	21B	X01A X01B X05Z
		X06A X06B X06C
		X07A X07B
	Prä	B61B B61C B61D
83.82.16↔		BORP MBOR VAC
		VAC I VAC II VBOR
	01	B17A B17B
	03	D12A
	04	E36A E36B
	05	F04Z F13A F13B
		F13C F21A F21B
		F21C
	06	G12A G16A G38A
		G38B
	08	I02A I02B I02C
		I08A I08B I12A
		I12B I12C I13A
		I13B I22Z I27A
		I27B I27C I27D
		I32C I50Z
	09	J02A J02B J04Z
		J08Z J21Z J22Z
	21B	X01A X01B X05Z

CHOP	MDC	DRG
		X06A X06B X06C
		X07A X07B
	Prä	B61B B61C B61D
83.82.19↔		BORP MBOR VAC
		VAC I VAC II VBOR
	01	B17A B17B
	03	D12A
	04	E36A E36B
	05	F04Z F13A F13B
		F13C F21A F21B
		F21C
	06	G12A G16A G38A
		G38B
	08	I02A I02B I02C
		I08A I08B I12A
		I12B I12C I13A
		I13B I22Z I27A
		I27B I27C I27D
		I32A I32B I32C
		I50Z
	09	J02A J02B J04Z
		J08Z J21Z J22Z
	21B	X01A X01B X05Z
		X06A X06B X06C
		X07A X07B
	Prä	B61B B61C B61D
83.82.20↔		BORP MBOR VAC
		VAC I VAC II VBOR
	01	B17A B17B
	03	D12A
	04	E36A E36B
	05	F04Z F13A F13B
		F13C F21A F21B
		F21C
	06	G12A G16A G38A
		G38B
	08	I02A I02B I02C
		I08A I08B I12A
		I12B I12C I13A
		I13B I22Z I29A
		I29B I32C I50Z
	09	J02A J02B J04Z
		J08Z J21Z J22Z
	21B	X01A X01B X05Z
		X06A X06B X06C
		X07A X07B
	Prä	B61B B61C B61D
83.82.21↔		BORP MBOR VAC
		VAC I VAC II VBOR
	01	B17A B17B
	03	D12A
	04	E36A E36B
	05	F04Z F13A F13B
		F13C F21A F21B
		F21C
	06	G12A G16A G38A
		G38B
	08	I02A I02B I02C
		I08A I08B I12A
		I12B I12C I13A
		I13B I22Z I29A
		I29B I32C I50Z
	09	J02A J02B J04Z
		J08Z J21Z J22Z
	21B	X01A X01B X05Z
		X06A X06B X06C
		X07A X07B
	Prä	B61B B61C B61D
83.82.22↔		BORP MBOR VAC
		VAC I VAC II VBOR

CHOP	MDC	DRG
	01	B17A B17B
	03	D12A
	04	E36A E36B
	05	F04Z F13A F13B
		F13C F21A F21B
		F21C
	06	G12A G16A G38A
		G38B
	08	I02A I02B I02C
		I08A I08B I12A
		I12B I12C I13A
		I13B I22Z I29A
		I29B I32C I50Z
	09	J02A J02B J04Z
		J08Z J21Z J22Z
	21B	X01A X01B X05Z
		X06A X06B X06C
		X07A X07B
	Prä	B61B B61C B61D
83.82.23↔		BORP MBOR VAC
		VAC I VAC II VBOR
	01	B17A B17B
	03	D12A
	04	E36A E36B
	05	F04Z F13A F13B
		F13C F21A F21B
		F21C
	06	G12A G16A G38A
		G38B
	08	I02A I02B I02C
		I08A I08B I12A
		I12B I12C I13A
		I13B I22Z I27A
		I27B I27C I27D
		I32A I32B I32C
		I50Z
	09	J02A J02B J04Z
		J08Z J21Z J22Z
	21B	X01A X01B X05Z
		X06A X06B X06C
		X07A X07B
	Prä	B61B B61C B61D
83.82.24↔		BORP MBOR VAC
		VAC I VAC II VBOR
	01	B17A B17B
	03	D12A
	04	E36A E36B
	05	F04Z F13A F13B
		F13C F21A F21B
		F21C
	06	G12A G16A G38A
		G38B
	08	I02A I02B I02C
		I08A I08B I12A
		I12B I12C I13A
		I13B I22Z I27A
		I27B I27C I27D
		I32C I50Z
	09	J02A J02B J04Z
		J08Z J21Z J22Z
	21B	X01A X01B X05Z
		X06A X06B X06C
		X07A X07B
	Prä	B61B B61C B61D
83.82.25↔		BORP MBOR VAC
		VAC I VAC II VBOR
	01	B17A B17B
	03	D12A
	04	E36A E36B
	05	F04Z F13A F13B

PROC

PROC

CHOP	MDC	DRG
		F13C F21A F21B F21C
	06	G12A G16A G38A G38B
	08	I02A I02B I02C I08A I08B I12A I12B I12C I13A I13B I22Z I27A I27B I27C I27D I32C I50Z
	09	J02A J02B J04Z J08Z J21Z J22Z
	21B	X01A X01B X05Z X06A X06B X06C X07A X07B
	Prä	B61B B61C B61D
83.82.26↔		BORP MBOR VAC VAC I VAC II VBOR
	01	B17A B17B
	03	D12A
	04	E36A E36B
	05	F04Z F13A F13B F13C F21A F21B F21C
	06	G12A G16A G38A G38B
	08	I02A I02B I02C I08A I08B I12A I12B I12C I13A I13B I22Z I27A I27B I27C I27D I32C I50Z
	09	J02A J02B J04Z J08Z J21Z J22Z
	21B	X01A X01B X05Z X06A X06B X06C X07A X07B
	Prä	B61B B61C B61D
83.82.29↔		BORP MBOR VAC VAC I VAC II VBOR
	01	B17A B17B
	03	D12A
	04	E36A E36B
	05	F04Z F13A F13B F13C F21A F21B F21C
	06	G12A G16A G38A G38B
	08	I02A I02B I02C I08A I08B I12A I12B I12C I13A I13B I22Z I27A I27B I27C I27D I32A I32B I32C I50Z
	09	J02A J02B J04Z J08Z J21Z J22Z
	21B	X01A X01B X05Z X06A X06B X06C X07A X07B
	Prä	B61B B61C B61D
83.82.30↔		BORP MBOR VAC VAC I VAC II VBOR
	01	B17A B17B
	03	D12A
	04	E36A E36B
	05	F04Z F13A F13B F13C F21A F21B F21C
	06	G12A G16A G38A

CHOP	MDC	DRG
		G38B
	08	I02A I02B I02C I08A I08B I12A I12B I12C I13A I13B I22Z I29A I29B I32C I50Z
	09	J02A J02B J04Z J08Z J21Z J22Z
	21B	X01A X01B X05Z X06A X06B X06C X07A X07B
	Prä	B61B B61C B61D
83.82.31↔		BORP MBOR VAC VAC I VAC II VBOR
	01	B17A B17B
	03	D12A
	04	E36A E36B
	05	F04Z F13A F13B F13C F21A F21B F21C
	06	G12A G16A G38A G38B
	08	I02A I02B I02C I08A I08B I12A I12B I12C I13A I13B I22Z I29A I29B I32C I50Z
	09	J02A J02B J04Z J08Z J21Z J22Z
	21B	X01A X01B X05Z X06A X06B X06C X07A X07B
	Prä	B61B B61C B61D
83.82.32↔		BORP MBOR VAC VAC I VAC II VBOR
	01	B17A B17B
	03	D12A
	04	E36A E36B
	05	F04Z F13A F13B F13C F21A F21B F21C
	06	G12A G16A G38A G38B
	08	I02A I02B I02C I08A I08B I12A I12B I12C I13A I13B I22Z I29A I29B I32C I50Z
	09	J02A J02B J04Z J08Z J21Z J22Z
	21B	X01A X01B X05Z X06A X06B X06C X07A X07B
	Prä	B61B B61C B61D
83.82.33↔		BORP MBOR VAC VAC I VAC II VBOR
	01	B17A B17B
	03	D12A
	04	E36A E36B
	05	F04Z F13A F13B F13C F21A F21B F21C
	06	G12A G16A G38A G38B
	08	I02A I02B I02C I08A I08B I12A I12B I12C I13A I13B I22Z I27A I27B I27C I32A I32B I32C I50Z

CHOP	MDC	DRG
	09	J02A J02B J04Z J08Z J21Z J22Z
	21B	X01A X01B X05Z X06A X06B X06C X07A X07B
	Prä	B61B B61C B61D
83.82.34↔		BORP MBOR VAC VAC I VAC II VBOR
	01	B17A B17B
	03	D12A
	04	E36A E36B
	05	F04Z F13A F13B F13C F21A F21B F21C
	06	G12A G16A G38A G38B
	08	I02A I02B I02C I08A I08B I12A I12B I12C I13A I13B I22Z I27A I27B I27C I32C I50Z
	09	J02A J02B J04Z J08Z J21Z J22Z
	21B	X01A X01B X05Z X06A X06B X06C X07A X07B
	Prä	B61B B61C B61D
83.82.35↔		BORP MBOR VAC VAC I VAC II VBOR
	01	B17A B17B
	03	D12A
	04	E36A E36B
	05	F04Z F13A F13B F13C F21A F21B F21C
	06	G12A G16A G38A G38B
	08	I02A I02B I02C I08A I08B I12A I12B I12C I13A I13B I22Z I27A I27B I27C I32C I50Z
	09	J02A J02B J04Z J08Z J21Z J22Z
	21B	X01A X01B X05Z X06A X06B X06C X07A X07B
	Prä	B61B B61C B61D
83.82.36↔		BORP KORP MBOR MKOR VAC VAC I VAC II VBOR VKOR
	01	B17A B17B
	03	D12A
	04	E36A E36B
	05	F04Z F13A F13B F13C F21A F21B F21C
	06	G12A G16A G38A G38B
	08	I02A I02B I02C I08A I08B I12A I12B I12C I13A I13B I22Z I27A I27B I27C I32C I50Z
	09	J02A J02B J04Z J08Z J21Z J22Z
	21B	X01A X01B X05Z

CHOP	MDC	DRG
		X06A X06B X06C X07A X07B
	Prä	B61B B61C B61D
83.82.39↔		BORP KORP MBOR MKOR VAC VAC I VAC II VBOR VKOR
	01	B17A B17B
	03	D12A
	04	E36A E36B
	05	F04Z F13A F13B F13C F21A F21B F21C
	06	G12A G16A G38A G38B
	08	I02A I02B I02C I08A I08B I12A I12B I12C I13A I13B I22Z I27A I27B I27C I27D I32A I32B I32C I50Z
	09	J02A J02B J04Z J08Z J21Z J22Z
	21B	X01A X01B X05Z X06A X06B X06C X07A X07B
	Prä	B61B B61C B61D
83.82.40↔		BORP KORP MBOR MKOR VAC VAC I VAC II VB VBOR VKOR
	01	B17A B17B
	03	D02A D02B D24A D24B
	04	E36A E36B
	05	F04Z F13A F13B F13C F21A F21B F21C
	06	G12A G16A G38A G38B
	08	I02A I02B I02C
	09	J01A J01B J02A J02B
	12	M37Z
	21A	W01A W01B
	21B	X01A X05Z X06A X06B X06C X07A X07B
	22	Y02A Y02B
83.82.41↔		BORP KORP MBOR MKOR VAC VAC I VAC II VB VBOR VKOR
	01	B17A B17B
	03	D02A D02B D24A D24B
	04	E36A E36B
	05	F04Z F13A F13B F13C F21A F21B F21C
	06	G12A G16A G38A G38B
	08	I02A I02B I02C
	09	J01A J01B J02A J02B
	12	M37Z
	21A	W01A W01B
	21B	X01A X05Z X06A X06B X06C X07A X07B
	22	Y02A Y02B
83.82.42↔		BORP KORP MBOR MKOR VAC VAC I VAC II VB VBOR VKOR
	01	B17A B17B
	03	D02A D02B D24A D24B
	04	E36A E36B
	05	F04Z F13A F13B F13C F21A F21B F21C
	06	G12A G16A G38A G38B
	08	I02A I02B I02C
	09	J01A J01B J02A J02B
	12	M37Z
	21A	W01A W01B
	21B	X01A X05Z X06A X06B X06C X07A X07B
	22	Y02A Y02B
83.82.43↔		BORP KORP MBOR MKOR VAC VAC I VAC II VB VBOR VKOR
	01	B17A B17B
	03	D02A D02B D24A D24B
	04	E36A E36B
	05	F04Z F13A F13B F13C F21A F21B F21C
	06	G12A G16A G38A G38B
	08	I02A I02B I02C
	09	J01A J01B J02A J02B
	12	M37Z
	21A	W01A W01B
	21B	X01A X05Z X06A X06B X06C X07A X07B
	22	Y02A Y02B
83.82.44↔		BORP KORP MBOR MKOR VAC VAC I VAC II VB VBOR VKOR
	01	B17A B17B
	03	D02A D02B D24A D24B
	04	E36A E36B
	05	F04Z F13A F13B F13C F21A F21B F21C
	06	G12A G16A G38A G38B
	08	I02A I02B I02C
	09	J01A J01B J02A J02B
	12	M37Z
	21A	W01A W01B
	21B	X01A X05Z X06A X06B X06C X07A X07B
	22	Y02A Y02B
83.82.45↔		BORP KORP MBOR MKOR VAC VAC I VAC II VB VBOR VKOR
	01	B17A B17B
	03	D02A D02B D24A D24B
	04	E36A E36B
	05	F04Z F13A F13B F13C F21A F21B F21C
	06	G12A G16A G38A G38B
	08	I02A I02B I02C
	09	J01A J01B J02A J02B
	12	M37Z
	21A	W01A W01B
	21B	X01A X05Z X06A X06B X06C X07A X07B
	22	Y02A Y02B
83.82.46↔		BORP KORP MBOR MKOR VAC VAC I VAC II VB VBOR VKOR
	01	B17A B17B
	03	D02A D02B D24A D24B
	04	E36A E36B
	05	F04Z F13A F13B F13C F21A F21B F21C
	06	G12A G16A G38A G38B
	08	I02A I02B I02C
	09	J01A J01B J02A J02B
	12	M37Z
	21A	W01A W01B
	21B	X01A X05Z X06A X06B X06C X07A X07B
	22	Y02A Y02B
83.82.47↔		BORP KORP MBOR MKOR VAC VAC I VAC II VB VBOR VKOR
	01	B17A B17B
	03	D02A D02B D24A D24B
	04	E36A E36B
	05	F04Z F13A F13B F13C F21A F21B F21C
	06	G12A G16A G38A G38B
	08	I02A I02B I02C
	09	J01A J01B J02A J02B
	12	M37Z
	21A	W01A W01B
	21B	X01A X05Z X06A X06B X06C X07A X07B
	22	Y02A Y02B
83.83↔		BORP EML MBOR VAC VAC I VAC II VBOR
	04	E36A E36B
	06	G12A G16A G38A G38B
	08	I02A I02B I02C

PROC

PROC

CHOP	MDC	DRG
		I32A I32B I32C
		I32E I32F
	21B	X06A X06B X06C
83.84↔		BORP EML MBOR
		VAC VAC I VAC II
		VBOR
	04	E36A E36B
	06	G12A G16A G38A
		G38B
	08	I02A I02B I02C
		I12A I12B I12C
		I20A I20B I20C
		I20D I20G
	21B	X04Z X06A X06B
		X06C
	Prä	B61B B61C B61D
83.85.10↔		BORP MBOR VAC
		VAC I VAC II VBOR
	01	B17A B17B
	03	D12A D12B
	04	E02A E02B E02C
		E36A E36B
	05	F21A F21B F21C
	06	G12A G12B G16A
		G38A G38B
	07	H06Z
	08	I29A I29B I29C
	09	J11A J11B
	10	K09A K09B
	11	L09A L09B
	12	M06Z M37Z
	13	N11A N11B
	21B	X06A X06B X06C
83.85.11↔		BORP MBOR VAC
		VAC I VAC II VBOR
	01	B17A B17B
	03	D12A D12B
	04	E02A E02B E02C
		E36A E36B
	05	F21A F21B F21C
	06	G12A G12B G16A
		G38A G38B
	07	H06Z
	08	I29A I29B I29C
	09	J11A J11B
	10	K09A K09B
	11	L09A L09B
	12	M06Z M37Z
	13	N11A N11B
	21B	X06A X06B X06C
83.85.12↔		BORP MBOR VAC
		VAC I VAC II VBOR
	01	B17A B17B
	03	D12A D12B
	04	E02A E02B E02C
		E36A E36B
	05	F21A F21B F21C
	06	G12A G12B G16A
		G38A G38B
	07	H06Z
	08	I29A I29B I29C
	09	J11A J11B
	10	K09A K09B
	11	L09A L09B
	12	M06Z M37Z
	13	N11A N11B
	21B	X06A X06B X06C
83.85.13↔		BORP MBOR VAC
		VAC I VAC II VBOR
	01	B17A B17B
	03	D12A D12B
	04	E02A E02B E02C
		E36A E36B
	05	F21A F21B F21C
	06	G12A G12B G16A
		G38A G38B
	07	H06Z
	08	I27A I27B I27C
	09	J11A J11B
	10	K09A K09B
	11	L09A L09B
	12	M06Z M37Z
	13	N11A N11B
	21B	X06A X06B X06C
83.85.14↔		BORP MBOR VAC
		VAC I VAC II VBOR
	01	B17A B17B
	03	D12A D12B
	04	E02A E02B E02C
		E36A E36B
	05	F21A F21B F21C
	06	G12A G12B G16A
		G38A G38B
	07	H06Z
	08	I27A I27B I27C
	09	J11A J11B
	10	K09A K09B
	11	L09A L09B
	12	M06Z M37Z
	13	N11A N11B
	21B	X06A X06B X06C
83.85.15↔		BORP MBOR VAC
		VAC I VAC II VBOR
	01	B17A B17B
	03	D12A D12B
	04	E02A E02B E02C
		E36A E36B
	05	F21A F21B F21C
	06	G12A G12B G16A
		G38A G38B
	07	H06Z
	08	I27A I27B I27C
	09	J11A J11B
	10	K09A K09B
	11	L09A L09B
	12	M06Z M37Z
	13	N11A N11B
	21B	X06A X06B X06C
83.85.16↔		BORP MBOR VAC
		VAC I VAC II VBOR
	01	B17A B17B
	03	D12A D12B
	04	E02A E02B E02C
		E36A E36B
	05	F21A F21B F21C
	06	G12A G12B G16A
		G38A G38B
	07	H06Z
	08	I27A I27B I27C
	09	J11A J11B
	10	K09A K09B
	11	L09A L09B
	12	M06Z M37Z
	13	N11A N11B
	21B	X06A X06B X06C
83.85.19↔		BORP MBOR VAC
		VAC I VAC II VBOR
	01	B17A B17B
	03	D12A D12B
	04	E02A E02B E02C
		E36A E36B
	05	F21A F21B F21C
	06	G12A G12B G16A
		G38A G38B
	07	H06Z
	08	I27A I27B I27C
		I27D
	09	J11A J11B
	10	K09A K09B
	11	L09A L09B
	12	M06Z M37Z
	13	N11A N11B
	21B	X06A X06B X06C
83.85.20↔		BORP MBOR VAC
		VAC I VAC II VBOR
	01	B17A B17B
	03	D12A D12B
	04	E02A E02B E02C
		E36A E36B
	05	F21A F21B F21C
	06	G12A G12B G16A
		G38A G38B
	07	H06Z
	08	I29A I29B I29C
	09	J11A J11B
	10	K09A K09B
	11	L09A L09B
	12	M06Z M37Z
	13	N11A N11B
	21B	X06A X06B X06C
83.85.21↔		BORP MBOR VAC
		VAC I VAC II VBOR
	01	B17A B17B
	03	D12A D12B
	04	E02A E02B E02C
		E36A E36B
	05	F21A F21B F21C
	06	G12A G12B G16A
		G38A G38B
	07	H06Z
	08	I29A I29B I29C
	09	J11A J11B
	10	K09A K09B
	11	L09A L09B
	12	M06Z M37Z
	13	N11A N11B
	21B	X06A X06B X06C
83.85.22↔		BORP MBOR VAC
		VAC I VAC II VBOR
	01	B17A B17B
	03	D12A D12B
	04	E02A E02B E02C
		E36A E36B
	05	F21A F21B F21C
	06	G12A G12B G16A
		G38A G38B
	07	H06Z
	08	I29A I29B I29C
	09	J11A J11B
	10	K09A K09B
	11	L09A L09B
	12	M06Z M37Z
	13	N11A N11B
	21B	X06A X06B X06C
83.85.23↔		BORP MBOR VAC
		VAC I VAC II VBOR
	01	B17A B17B
	03	D12A D12B
	04	E02A E02B E02C
		E36A E36B

CHOP	MDC	DRG
	05	F21A F21B F21C
	06	G12A G12B G16A
		G38A G38B
	07	H06Z
	08	I27A I27B I27C
		I27D
	09	J11A J11B
	10	K09A K09B
	11	L09A L09B
	12	M06Z M37Z
	13	N11A N11B
	21B	X06A X06B X06C
83.85.24↔		BORP MBOR VAC
		VAC I VAC II VBOR
	01	B17A B17B
	03	D12A D12B
	04	E02A E02B E02C
		E36A E36B
	05	F21A F21B F21C
	06	G12A G12B G16A
		G38A G38B
	07	H06Z
	08	I27A I27B I27C
		I27D
	09	J11A J11B
	10	K09A K09B
	11	L09A L09B
	12	M06Z M37Z
	13	N11A N11B
	21B	X06A X06B X06C
83.85.25↔		BORP MBOR VAC
		VAC I VAC II VBOR
	01	B17A B17B
	03	D12A D12B
	04	E02A E02B E02C
		E36A E36B
	05	F21A F21B F21C
	06	G12A G12B G16A
		G38A G38B
	07	H06Z
	08	I27A I27B I27C
		I27D
	09	J11A J11B
	10	K09A K09B
	11	L09A L09B
	12	M06Z M37Z
	13	N11A N11B
	21B	X06A X06B X06C
83.85.26↔		BORP MBOR VAC
		VAC I VAC II VBOR
	01	B17A B17B
	03	D12A D12B
	04	E02A E02B E02C
		E36A E36B
	05	F21A F21B F21C
	06	G12A G12B G16A
		G38A G38B
	07	H06Z
	08	I27A I27B I27C
		I27D
	09	J11A J11B
	10	K09A K09B
	11	L09A L09B
	12	M06Z M37Z
	13	N11A N11B
	21B	X06A X06B X06C
83.85.29↔		BORP MBOR VAC
		VAC I VAC II VBOR
	01	B17A B17B
	03	D12A D12B
	04	E02A E02B E02C
		E36A E36B
	05	F21A F21B F21C
	06	G12A G12B G16A
		G38A G38B
	07	H06Z
	08	I27A I27B I27C
		I27D
	09	J11A J11B
	10	K09A K09B
	11	L09A L09B
	12	M06Z M37Z
	13	N11A N11B
	21B	X06A X06B X06C
83.86↔		BORP MBOR VAC
		VAC I VAC II VBOR
	01	B17A B17B
	03	D12A D12B
	04	E02A E02B E02C
		E36A E36B
	05	F21A F21B F21C
	06	G12A G12B G16A
		G38A G38B
	07	H06Z
	08	I30A I30B I30C
	09	J11A J11B
	10	K09A K09B
	11	L09A L09B
	12	M06Z M37Z
	13	N11A N11B
	21B	X06A X06B X06C
83.87.10↔		BORP MBOR VAC
		VAC I VAC II VBOR
	01	B17A B17B
	03	D12A D12B
	04	E02A E02B E02C
		E36A E36B
	05	F21A F21B F21C
	06	G12A G12B G16A
		G38A G38B
	07	H06Z
	08	I29A I29B I29C
	09	J11A J11B
	10	K09A K09B
	11	L09A L09B
	12	M06Z M37Z
	13	N11A N11B
	21B	X06A X06B X06C
83.87.11↔		BORP MBOR VAC
		VAC I VAC II VBOR
	01	B17A B17B
	03	D12A D12B
	04	E02A E02B E02C
		E36A E36B
	05	F21A F21B F21C
	06	G12A G12B G16A
		G38A G38B
	07	H06Z
	08	I29A I29B I29C
	09	J11A J11B
	10	K09A K09B
	11	L09A L09B
	12	M06Z M37Z
	13	N11A N11B
	21B	X06A X06B X06C
83.87.12↔		BORP MBOR VAC
		VAC I VAC II VBOR
	01	B17A B17B
	03	D12A D12B
	04	E02A E02B E02C
		E36A E36B
	05	F21A F21B F21C
	06	G12A G12B G16A
		G38A G38B
	07	H06Z
	08	I29A I29B I29C
	09	J11A J11B
	10	K09A K09B
	11	L09A L09B
	12	M06Z M37Z
	13	N11A N11B
	21B	X06A X06B X06C
83.87.13↔		BORP MBOR VAC
		VAC I VAC II VBOR
	01	B17A B17B
	03	D12A D12B
	04	E02A E02B E02C
		E36A E36B
	05	F21A F21B F21C
	06	G12A G12B G16A
		G38A G38B
	07	H06Z
	08	I27A I27B I27C
		I27D
	09	J11A J11B
	10	K09A K09B
	11	L09A L09B
	12	M06Z M37Z
	13	N11A N11B
	21B	X06A X06B X06C
83.87.14↔		BORP MBOR VAC
		VAC I VAC II VBOR
	01	B17A B17B
	03	D12A D12B
	04	E02A E02B E02C
		E36A E36B
	05	F21A F21B F21C
	06	G12A G12B G16A
		G38A G38B
	07	H06Z
	08	I27A I27B I27C
		I27D
	09	J11A J11B
	10	K09A K09B
	11	L09A L09B
	12	M06Z M37Z
	13	N11A N11B
	21B	X06A X06B X06C
83.87.15↔		BORP MBOR VAC
		VAC I VAC II VBOR
	01	B17A B17B
	03	D12A D12B
	04	E02A E02B E02C
		E36A E36B
	05	F21A F21B F21C
	06	G12A G12B G16A
		G38A G38B
	07	H06Z
	08	I27A I27B I27C
		I27D
	09	J11A J11B
	10	K09A K09B
	11	L09A L09B
	12	M06Z M37Z
	13	N11A N11B
	21B	X06A X06B X06C
83.87.16↔		BORP MBOR VAC
		VAC I VAC II VBOR
	01	B17A B17B
	03	D12A D12B

PROC

CHOP	MDC	DRG
	04	E02A E02B E02C
		E36A E36B
	05	F21A F21B F21C
	06	G12A G12B G16A
		G38A G38B
	07	H06Z
	08	I27A I27B I27C
		I27D
	09	J11A J11B
	10	K09A K09B
	11	L09A L09B
	12	M06Z M37Z
	13	N11A N11B
	21B	X06A X06B X06C
83.88.10↔		BORP MBOR VAC
		VAC I VAC II VBOR
	01	B17A B17B
	03	D12A D12B
	04	E02A E02B E02C
		E36A E36B
	05	F21A F21B F21C
	06	G12A G12B G16A
		G38A G38B
	07	H06Z
	08	I29A I29B I29C
	09	J11A J11B
	10	K09A K09B
	11	L09A L09B
	12	M06Z M37Z
	13	N11A N11B
	21B	X06A X06B X06C
83.88.11↔		BORP MBOR VAC
		VAC I VAC II VBOR
	01	B17A B17B
	03	D12A D12B
	04	E02A E02B E02C
		E36A E36B
	05	F21A F21B F21C
	06	G12A G12B G16A
		G38A G38B
	07	H06Z
	08	I29A I29B
	09	J11A J11B
	10	K09A K09B
	11	L09A L09B
	12	M06Z M37Z
	13	N11A N11B
	21B	X06A X06B X06C
83.88.12↔		BORP MBOR VAC
		VAC I VAC II VBOR
	01	B17A B17B
	03	D12A D12B
	04	E02A E02B E02C
		E36A E36B
	05	F21A F21B F21C
	06	G12A G12B G16A
		G38A G38B
	07	H06Z
	08	I29A I29B
	09	J11A J11B
	10	K09A K09B
	11	L09A L09B
	12	M06Z M37Z
	13	N11A N11B
	21B	X06A X06B X06C
83.88.13↔		BORP MBOR VAC
		VAC I VAC II VBOR
	01	B17A B17B
	03	D12A D12B
	04	E02A E02B E02C

CHOP	MDC	DRG
		E36A E36B
	05	F21A F21B F21C
	06	G12A G12B G16A
		G38A G38B
	07	H06Z
	08	I27A I27B I27C
		I27D
	09	J11A J11B
	10	K09A K09B
	11	L09A L09B
	12	M06Z M37Z
	13	N11A N11B
	21B	X06A X06B X06C
83.88.14↔		BORP MBOR VAC
		VAC I VAC II VBOR
	01	B17A B17B
	03	D12A D12B
	04	E02A E02B E02C
		E36A E36B
	05	F21A F21B F21C
	06	G12A G12B G16A
		G38A G38B
	07	H06Z
	08	I27A I27B I27C
		I27D
	09	J11A J11B
	10	K09A K09B
	11	L09A L09B
	12	M06Z M37Z
	13	N11A N11B
	21B	X06A X06B X06C
83.88.15↔		BORP MBOR VAC
		VAC I VAC II VBOR
	01	B17A B17B
	03	D12A D12B
	04	E02A E02B E02C
		E36A E36B
	05	F21A F21B F21C
	06	G12A G12B G16A
		G38A G38B
	07	H06Z
	08	I27A I27B I27C
		I27D
	09	J11A J11B
	10	K09A K09B
	11	L09A L09B
	12	M06Z M37Z
	13	N11A N11B
	21B	X06A X06B X06C
83.88.16↔		BORP MBOR VAC
		VAC I VAC II VBOR
	01	B17A B17B
	03	D12A D12B
	04	E02A E02B E02C
		E36A E36B
	05	F21A F21B F21C
	06	G12A G12B G16A
		G38A G38B
	07	H06Z
	08	I27A I27B I27C
		I27D
	09	J11A J11B
	10	K09A K09B
	11	L09A L09B
	12	M06Z M37Z
	13	N11A N11B
	21B	X06A X06B X06C
83.88.19↔		BORP MBOR VAC
		VAC I VAC II VBOR
	01	B17A B17B

CHOP	MDC	DRG
	03	D12A D12B
	04	E02A E02B E02C
		E36A E36B
	05	F21A F21B F21C
	06	G12A G12B G16A
		G38A G38B
	07	H06Z
	08	I27A I27B I27C
		I27D
	09	J11A J11B
	10	K09A K09B
	11	L09A L09B
	12	M06Z M37Z
	13	N11A N11B
	21B	X06A X06B X06C
83.88.20↔		BORP MBOR VAC
		VAC I VAC II VBOR
	01	B17A B17B
	03	D12A D12B
	04	E02A E02B E02C
		E36A E36B
	05	F21A F21B F21C
	06	G12A G12B G16A
		G38A G38B
	07	H06Z
	08	I29A I29B I29C
	09	J11A J11B
	10	K09A K09B
	11	L09A L09B
	12	M06Z M37Z
	13	N11A N11B
	21B	X06A X06B X06C
83.88.21↔		BORP MBOR VAC
		VAC I VAC II VBOR
	01	B17A B17B
	03	D12A D12B
	04	E02A E02B E02C
		E36A E36B
	05	F21A F21B F21C
	06	G12A G12B G16A
		G38A G38B
	07	H06Z
	08	I29A I29B
	09	J11A J11B
	10	K09A K09B
	11	L09A L09B
	12	M06Z M37Z
	13	N11A N11B
	21B	X06A X06B X06C
83.88.22↔		BORP MBOR VAC
		VAC I VAC II VBOR
	01	B17A B17B
	03	D12A D12B
	04	E02A E02B E02C
		E36A E36B
	05	F21A F21B F21C
	06	G12A G12B G16A
		G38A G38B
	07	H06Z
	08	I29A I29B
	09	J11A J11B
	10	K09A K09B
	11	L09A L09B
	12	M06Z M37Z
	13	N11A N11B
	21B	X06A X06B X06C
83.88.23↔		BORP MBOR VAC
		VAC I VAC II VBOR
	01	B17A B17B
	03	D12A D12B

CHOP	MDC	DRG
	04	E02A E02B E02C E36A E36B
	05	F21A F21B F21C
	06	G12A G12B G16A G38A G38B
	07	H06Z
	08	I27A I27B I27C
	09	J11A J11B
	10	K09A K09B
	11	L09A L09B
	12	M06Z M37Z
	13	N11A N11B
	21B	X06A X06B X06C
83.88.24↔		BORP MBOR VAC VAC I VAC II VBOR
	01	B17A B17B
	03	D12A D12B
	04	E02A E02B E02C E36A E36B
	05	F21A F21B F21C
	06	G12A G12B G16A G38A G38B
	07	H06Z
	08	I27A I27B I27C
	09	J11A J11B
	10	K09A K09B
	11	L09A L09B
	12	M06Z M37Z
	13	N11A N11B
	21B	X06A X06B X06C
83.88.25↔		BORP MBOR VAC VAC I VAC II VBOR
	01	B17A B17B
	03	D12A D12B
	04	E02A E02B E02C E36A E36B
	05	F21A F21B F21C
	06	G12A G12B G16A G38A G38B
	07	H06Z
	08	I27A I27B I27C
	09	J11A J11B
	10	K09A K09B
	11	L09A L09B
	12	M06Z M37Z
	13	N11A N11B
	21B	X06A X06B X06C
83.88.26↔		BORP MBOR VAC VAC I VAC II VBOR
	01	B17A B17B
	03	D12A D12B
	04	E02A E02B E02C E36A E36B
	05	F21A F21B F21C
	06	G12A G12B G16A G38A G38B
	07	H06Z
	08	I27A I27B I27C
	09	J11A J11B
	10	K09A K09B
	11	L09A L09B
	12	M06Z M37Z
	13	N11A N11B
	21B	X06A X06B X06C
83.88.29↔		BORP MBOR VAC VAC I VAC II VBOR
	01	B17A B17B
	03	D12A D12B
	04	E02A E02B E02C E36A E36B
	05	F21A F21B F21C
	06	G12A G12B G16A G38A G38B
	07	H06Z
	08	I27A I27B I27C I27D
	09	J11A J11B
	10	K09A K09B
	11	L09A L09B
	12	M06Z M37Z
	13	N11A N11B
	21B	X06A X06B X06C
83.88.30↔		BORP MBOR VAC VAC I VAC II VBOR
	01	B17A B17B
	03	D12A D12B
	04	E02A E02B E02C E36A E36B
	05	F21A F21B F21C
	06	G12A G12B G16A G38A G38B
	07	H06Z
	08	I29A I29B I29C
	09	J11A J11B
	10	K09A K09B
	11	L09A L09B
	12	M06Z M37Z
	13	N11A N11B
	21B	X06A X06B X06C
83.88.31↔		BORP MBOR VAC VAC I VAC II VBOR
	01	B17A B17B
	03	D12A D12B
	04	E02A E02B E02C E36A E36B
	05	F21A F21B F21C
	06	G12A G12B G16A G38A G38B
	07	H06Z
	08	I29A I29B I29C
	09	J11A J11B
	10	K09A K09B
	11	L09A L09B
	12	M06Z M37Z
	13	N11A N11B
	21B	X06A X06B X06C
83.88.32↔		BORP MBOR VAC VAC I VAC II VBOR
	01	B17A B17B
	03	D12A D12B
	04	E02A E02B E02C E36A E36B
	05	F21A F21B F21C
	06	G12A G12B G16A G38A G38B
	07	H06Z
	08	I29A I29B I29C
	09	J11A J11B
	10	K09A K09B
	11	L09A L09B
	12	M06Z M37Z
	13	N11A N11B
	21B	X06A X06B X06C
83.88.33↔		BORP MBOR VAC VAC I VAC II VBOR
	01	B17A B17B
	03	D12A D12B
	04	E02A E02B E02C E36A E36B
	05	F21A F21B F21C
	06	G12A G12B G16A G38A G38B
	07	H06Z
	08	I27A I27B I27C I27D
	09	J11A J11B
	10	K09A K09B
	11	L09A L09B
	12	M06Z M37Z
	13	N11A N11B
	21B	X06A X06B X06C
83.88.34↔		BORP MBOR VAC VAC I VAC II VBOR
	01	B17A B17B
	03	D12A D12B
	04	E02A E02B E02C E36A E36B
	05	F21A F21B F21C
	06	G12A G12B G16A G38A G38B
	07	H06Z
	08	I27A I27B I27C I27D
	09	J11A J11B
	10	K09A K09B
	11	L09A L09B
	12	M06Z M37Z
	13	N11A N11B
	21B	X06A X06B X06C
83.88.35↔		BORP MBOR VAC VAC I VAC II VBOR
	01	B17A B17B
	03	D12A D12B
	04	E02A E02B E02C E36A E36B
	05	F21A F21B F21C
	06	G12A G12B G16A G38A G38B
	07	H06Z
	08	I27A I27B I27C I27D
	09	J11A J11B
	10	K09A K09B
	11	L09A L09B
	12	M06Z M37Z
	13	N11A N11B
	21B	X06A X06B X06C
83.88.36↔		BORP MBOR VAC VAC I VAC II VBOR
	01	B17A B17B
	03	D12A D12B
	04	E02A E02B E02C E36A E36B
	05	F21A F21B F21C
	06	G12A G12B G16A G38A G38B
	07	H06Z
	08	I27A I27B I27C I27D
	09	J11A J11B
	10	K09A K09B
	11	L09A L09B
	12	M06Z M37Z
	13	N11A N11B
	21B	X06A X06B X06C
83.88.39↔		BORP MBOR VAC VAC I VAC II VBOR
	01	B17A B17B
	03	D12A D12B
	04	E02A E02B E02C

PROC

PROC

CHOP	MDC	DRG
		E36A E36B
	05	F21A F21B F21C
	06	G12A G12B G16A
		G38A G38B
	07	H06Z
	08	I27A I27B I27C
		I27D
	09	J11A J11B
	10	K09A K09B
	11	L09A L09B
	12	M06Z M37Z
	13	N11A N11B
	21B	X06A X06B X06C
83.88.40↔		BORP MBOR VAC
		VAC I VAC II VBOR
	01	B17A B17B
	03	D12A D12B
	04	E02A E02B E02C
		E36A E36B
	05	F21A F21B F21C
	06	G12A G12B G16A
		G38A G38B
	07	H06Z
	08	I29A I29B I29C
	09	J11A J11B
	10	K09A K09B
	11	L09A L09B
	12	M06Z M37Z
	13	N11A N11B
	21B	X06A X06B X06C
83.88.41↔		BORP MBOR VAC
		VAC I VAC II VBOR
	01	B17A B17B
	03	D12A D12B
	04	E02A E02B E02C
		E36A E36B
	05	F21A F21B F21C
	06	G12A G12B G16A
		G38A G38B
	07	H06Z
	08	I29A I29B I29C
	09	J11A J11B
	10	K09A K09B
	11	L09A L09B
	12	M06Z M37Z
	13	N11A N11B
	21B	X06A X06B X06C
83.88.42↔		BORP MBOR VAC
		VAC I VAC II VBOR
	01	B17A B17B
	03	D12A D12B
	04	E02A E02B E02C
		E36A E36B
	05	F21A F21B F21C
	06	G12A G12B G16A
		G38A G38B
	07	H06Z
	08	I29A I29B I29C
	09	J11A J11B
	10	K09A K09B
	11	L09A L09B
	12	M06Z M37Z
	13	N11A N11B
	21B	X06A X06B X06C
83.88.43↔		BORP MBOR VAC
		VAC I VAC II VBOR
	01	B17A B17B
	03	D12A D12B
	04	E02A E02B E02C
		E36A E36B
	05	F21A F21B F21C
	06	G12A G12B G16A
		G38A G38B
	07	H06Z
	08	I27A I27B I27C
		I27D
	09	J11A J11B
	10	K09A K09B
	11	L09A L09B
	12	M06Z M37Z
	13	N11A N11B
	21B	X06A X06B X06C
83.88.44↔		BORP MBOR VAC
		VAC I VAC II VBOR
	01	B17A B17B
	03	D12A D12B
	04	E02A E02B E02C
		E36A E36B
	05	F21A F21B F21C
	06	G12A G12B G16A
		G38A G38B
	07	H06Z
	08	I27A I27B I27C
		I27D
	09	J11A J11B
	10	K09A K09B
	11	L09A L09B
	12	M06Z M37Z
	13	N11A N11B
	21B	X06A X06B X06C
83.88.45↔		BORP MBOR VAC
		VAC I VAC II VBOR
	01	B17A B17B
	03	D12A D12B
	04	E02A E02B E02C
		E36A E36B
	05	F21A F21B F21C
	06	G12A G12B G16A
		G38A G38B
	07	H06Z
	08	I27A I27B I27C
		I27D
	09	J11A J11B
	10	K09A K09B
	11	L09A L09B
	12	M06Z M37Z
	13	N11A N11B
	21B	X06A X06B X06C
83.88.46↔		BORP MBOR VAC
		VAC I VAC II VBOR
	01	B17A B17B
	03	D12A D12B
	04	E02A E02B E02C
		E36A E36B
	05	F21A F21B F21C
	06	G12A G12B G16A
		G38A G38B
	07	H06Z
	08	I27A I27B I27C
		I27D
	09	J11A J11B
	10	K09A K09B
	11	L09A L09B
	12	M06Z M37Z
	13	N11A N11B
	21B	X06A X06B X06C
83.88.49↔		BORP MBOR VAC
		VAC I VAC II VBOR
	01	B17A B17B
	03	D12A D12B
	04	E02A E02B E02C
		E36A E36B
	05	F21A F21B F21C
	06	G12A G12B G16A
		G38A G38B
	07	H06Z
	08	I27A I27B I27C
		I27D
	09	J11A J11B
	10	K09A K09B
	11	L09A L09B
	12	M06Z M37Z
	13	N11A N11B
	21B	X06A X06B X06C
83.88.90↔		BORP MBOR VAC
		VAC I VAC II VBOR
	01	B17A B17B
	03	D12A D12B
	04	E02A E02B E02C
		E36A E36B
	05	F21A F21B F21C
	06	G12A G12B G16A
		G38A G38B
	07	H06Z
	08	I29A I29B I29C
	09	J11A J11B
	10	K09A K09B
	11	L09A L09B
	12	M06Z M37Z
	13	N11A N11B
	21B	X06A X06B X06C
83.88.91↔		BORP MBOR VAC
		VAC I VAC II VBOR
	01	B17A B17B
	03	D12A D12B
	04	E02A E02B E02C
		E36A E36B
	05	F21A F21B F21C
	06	G12A G12B G16A
		G38A G38B
	07	H06Z
	08	I29A I29B I29C
	09	J11A J11B
	10	K09A K09B
	11	L09A L09B
	12	M06Z M37Z
	13	N11A N11B
	21B	X06A X06B X06C
83.88.92↔		BORP MBOR VAC
		VAC I VAC II VBOR
	01	B17A B17B
	03	D12A D12B
	04	E02A E02B E02C
		E36A E36B
	05	F21A F21B F21C
	06	G12A G12B G16A
		G38A G38B
	07	H06Z
	08	I29A I29B I29C
	09	J11A J11B
	10	K09A K09B
	11	L09A L09B
	12	M06Z M37Z
	13	N11A N11B
	21B	X06A X06B X06C
83.88.93↔		BORP MBOR VAC
		VAC I VAC II VBOR
	01	B17A B17B
	03	D12A D12B
	04	E02A E02B E02C

CHOP	MDC	DRG
		E36A E36B
	05	F21A F21B F21C
	06	G12A G12B G16A
		G38A G38B
	07	H06Z
	08	I27A I27B I27C
		I27D
	09	J11A J11B
	10	K09A K09B
	11	L09A L09B
	12	M06Z M37Z
	13	N11A N11B
	21B	X06A X06B X06C
83.88.94↔		BORP MBOR VAC
		VAC I VAC II VBOR
	01	B17A B17B
	03	D12A D12B
	04	E02A E02B E02C
		E36A E36B
	05	F21A F21B F21C
	06	G12A G12B G16A
		G38A G38B
	07	H06Z
	08	I27A I27B I27C
		I27D
	09	J11A J11B
	10	K09A K09B
	11	L09A L09B
	12	M06Z M37Z
	13	N11A N11B
	21B	X06A X06B X06C
83.88.95↔		BORP MBOR VAC
		VAC I VAC II VBOR
	01	B17A B17B
	03	D12A D12B
	04	E02A E02B E02C
		E36A E36B
	05	F21A F21B F21C
	06	G12A G12B G16A
		G38A G38B
	07	H06Z
	08	I27A I27B I27C
		I27D
	09	J11A J11B
	10	K09A K09B
	11	L09A L09B
	12	M06Z M37Z
	13	N11A N11B
	21B	X06A X06B X06C
83.88.96↔		BORP MBOR VAC
		VAC I VAC II VBOR
	01	B17A B17B
	03	D12A D12B
	04	E02A E02B E02C
		E36A E36B
	05	F21A F21B F21C
	06	G12A G12B G16A
		G38A G38B
	07	H06Z
	08	I27A I27B I27C
		I27D
	09	J11A J11B
	10	K09A K09B
	11	L09A L09B
	12	M06Z M37Z
	13	N11A N11B
	21B	X06A X06B X06C
83.89.10↔		BORP MBOR VAC
		VAC I VAC II VBOR
	01	B17A B17B

CHOP	MDC	DRG
	03	D12A D12B
	04	E02A E02B E02C
		E36A E36B
	05	F21A F21B F21C
	06	G12A G12B G16A
		G38A G38B
	07	H06Z
	08	I29A I29B I29C
	09	J11A J11B
	10	K09A K09B
	11	L09A L09B
	12	M06Z M37Z
	13	N11A N11B
	21B	X06A X06B X06C
83.89.11↔		BORP MBOR VAC
		VAC I VAC II VBOR
	01	B17A B17B
	03	D12A D12B
	04	E02A E02B E02C
		E36A E36B
	05	F21A F21B F21C
	06	G12A G12B G16A
		G38A G38B
	07	H06Z
	08	I29A I29B I29C
	09	J11A J11B
	10	K09A K09B
	11	L09A L09B
	12	M06Z M37Z
	13	N11A N11B
	21B	X06A X06B X06C
83.89.12↔		BORP MBOR VAC
		VAC I VAC II VBOR
	01	B17A B17B
	03	D12A D12B
	04	E02A E02B E02C
		E36A E36B
	05	F21A F21B F21C
	06	G12A G12B G16A
		G38A G38B
	07	H06Z
	08	I29A I29B I29C
	09	J11A J11B
	10	K09A K09B
	11	L09A L09B
	12	M06Z M37Z
	13	N11A N11B
	21B	X06A X06B X06C
83.89.13↔		BORP MBOR VAC
		VAC I VAC II VBOR
	01	B17A B17B
	03	D12A D12B
	04	E02A E02B E02C
		E36A E36B
	05	F21A F21B F21C
	06	G12A G12B G16A
		G38A G38B
	07	H06Z
	08	I27A I27B I27C
		I27D
	09	J11A J11B
	10	K09A K09B
	11	L09A L09B
	12	M06Z M37Z
	13	N11A N11B
	21B	X06A X06B X06C
83.89.14↔		BORP MBOR VAC
		VAC I VAC II VBOR
	01	B17A B17B
	03	D12A D12B

CHOP	MDC	DRG
	04	E02A E02B E02C
		E36A E36B
	05	F21A F21B F21C
	06	G12A G12B G16A
		G38A G38B
	07	H06Z
	08	I27A I27B I27C
		I27D
	09	J11A J11B
	10	K09A K09B
	11	L09A L09B
	12	M06Z M37Z
	13	N11A N11B
	21B	X06A X06B X06C
83.89.15↔		BORP MBOR VAC
		VAC I VAC II VBOR
	01	B17A B17B
	03	D12A D12B
	04	E02A E02B E02C
		E36A E36B
	05	F21A F21B F21C
	06	G12A G12B G16A
		G38A G38B
	07	H06Z
	08	I27A I27B I27C
		I27D
	09	J11A J11B
	10	K09A K09B
	11	L09A L09B
	12	M06Z M37Z
	13	N11A N11B
	21B	X06A X06B X06C
83.89.16↔		BORP MBOR VAC
		VAC I VAC II VBOR
	01	B17A B17B
	03	D12A D12B
	04	E02A E02B E02C
		E36A E36B
	05	F21A F21B F21C
	06	G12A G12B G16A
		G38A G38B
	07	H06Z
	08	I27A I27B I27C
		I27D
	09	J11A J11B
	10	K09A K09B
	11	L09A L09B
	12	M06Z M37Z
	13	N11A N11B
	21B	X06A X06B X06C
83.89.20↔		BORP MBOR VAC
		VAC I VAC II VBOR
	01	B17A B17B
	03	D12A D12B
	04	E02A E02B E02C
		E36A E36B
	05	F21A F21B F21C
	06	G12A G12B G16A
		G38A G38B
	07	H06Z
	08	I29A I29B I29C
	09	J11A J11B
	10	K09A K09B
	11	L09A L09B
	12	M06Z M37Z
	13	N11A N11B
	21B	X06A X06B X06C
83.89.21↔		BORP MBOR VAC
		VAC I VAC II VBOR
	01	B17A B17B

PROC

PROC

CHOP	MDC	DRG
	03	D12A D12B
	04	E02A E02B E02C E36A E36B
	05	F21A F21B F21C
	06	G12A G12B G16A G38A G38B
	07	H06Z
	08	I29A I29B I29C
	09	J11A J11B
	10	K09A K09B
	11	L09A L09B
	12	M06Z M37Z
	13	N11A N11B
	21B	X06A X06B X06C
83.89.22↔		BORP MBOR VAC VAC I VAC II VBOR
	01	B17A B17B
	03	D12A D12B
	04	E02A E02B E02C E36A E36B
	05	F21A F21B F21C
	06	G12A G12B G16A G38A G38B
	07	H06Z
	08	I29A I29B I29C
	09	J11A J11B
	10	K09A K09B
	11	L09A L09B
	12	M06Z M37Z
	13	N11A N11B
	21B	X06A X06B X06C
83.89.23↔		BORP MBOR VAC VAC I VAC II VBOR
	01	B17A B17B
	03	D12A D12B
	04	E02A E02B E02C E36A E36B
	05	F21A F21B F21C
	06	G12A G12B G16A G38A G38B
	07	H06Z
	08	I27A I27B I27C I27D
	09	J11A J11B
	10	K09A K09B
	11	L09A L09B
	12	M06Z M37Z
	13	N11A N11B
	21B	X06A X06B X06C
83.89.24↔		BORP MBOR VAC VAC I VAC II VBOR
	01	B17A B17B
	03	D12A D12B
	04	E02A E02B E02C E36A E36B
	05	F21A F21B F21C
	06	G12A G12B G16A G38A G38B
	07	H06Z
	08	I27A I27B I27C I27D
	09	J11A J11B
	10	K09A K09B
	11	L09A L09B
	12	M06Z M37Z
	13	N11A N11B
	21B	X06A X06B X06C
83.89.25↔		BORP MBOR VAC VAC I VAC II VBOR
	01	B17A B17B

CHOP	MDC	DRG
	03	D12A D12B
	04	E02A E02B E02C E36A E36B
	05	F21A F21B F21C
	06	G12A G12B G16A G38A G38B
	07	H06Z
	08	I27A I27B I27C I27D
	09	J11A J11B
	10	K09A K09B
	11	L09A L09B
	12	M06Z M37Z
	13	N11A N11B
	21B	X06A X06B X06C
83.89.26↔		BORP MBOR VAC VAC I VAC II VBOR
	01	B17A B17B
	03	D12A D12B
	04	E02A E02B E02C E36A E36B
	05	F21A F21B F21C
	06	G12A G12B G16A G38A G38B
	07	H06Z
	08	I27A I27B I27C I27D
	09	J11A J11B
	10	K09A K09B
	11	L09A L09B
	12	M06Z M37Z
	13	N11A N11B
	21B	X06A X06B X06C
83.89.90↔		BORP MBOR VAC VAC I VAC II VBOR
	01	B17A B17B
	03	D12A D12B
	04	E02A E02B E02C E36A E36B
	05	F21A F21B F21C
	06	G12A G12B G16A G38A G38B
	07	H06Z
	08	I29A I29B I29C
	09	J11A J11B
	10	K09A K09B
	11	L09A L09B
	12	M06Z M37Z
	13	N11A N11B
	21B	X06A X06B X06C
83.89.91↔		BORP MBOR VAC VAC I VAC II VBOR
	01	B17A B17B
	03	D12A D12B
	04	E02A E02B E02C E36A E36B
	05	F21A F21B F21C
	06	G12A G12B G16A G38A G38B
	07	H06Z
	08	I29A I29B I29C
	09	J11A J11B
	10	K09A K09B
	11	L09A L09B
	12	M06Z M37Z
	13	N11A N11B
	21B	X06A X06B X06C
83.89.92↔		BORP MBOR VAC VAC I VAC II VBOR
	01	B17A B17B

CHOP	MDC	DRG
	03	D12A D12B
	04	E02A E02B E02C E36A E36B
	05	F21A F21B F21C
	06	G12A G12B G16A G38A G38B
	07	H06Z
	08	I29A I29B I29C
	09	J11A J11B
	10	K09A K09B
	11	L09A L09B
	12	M06Z M37Z
	13	N11A N11B
	21B	X06A X06B X06C
83.89.93↔		BORP MBOR VAC VAC I VAC II VBOR
	01	B17A B17B
	03	D12A D12B
	04	E02A E02B E02C E36A E36B
	05	F21A F21B F21C
	06	G12A G12B G16A G38A G38B
	07	H06Z
	08	I27A I27B I27C I27D
	09	J11A J11B
	10	K09A K09B
	11	L09A L09B
	12	M06Z M37Z
	13	N11A N11B
	21B	X06A X06B X06C
83.89.94↔		BORP MBOR VAC VAC I VAC II VBOR
	01	B17A B17B
	03	D12A D12B
	04	E02A E02B E02C E36A E36B
	05	F21A F21B F21C
	06	G12A G12B G16A G38A G38B
	07	H06Z
	08	I27A I27B I27C I27D
	09	J11A J11B
	10	K09A K09B
	11	L09A L09B
	12	M06Z M37Z
	13	N11A N11B
	21B	X06A X06B X06C
83.89.95↔		BORP MBOR VAC VAC I VAC II VBOR
	01	B17A B17B
	03	D12A D12B
	04	E02A E02B E02C E36A E36B
	05	F21A F21B F21C
	06	G12A G12B G16A G38A G38B
	07	H06Z
	08	I27A I27B I27C I27D
	09	J11A J11B
	10	K09A K09B
	11	L09A L09B
	12	M06Z M37Z
	13	N11A N11B
	21B	X06A X06B X06C
83.89.96↔		BORP MBOR VAC VAC I VAC II VBOR

CHOP	MDC	DRG
	01	B17A B17B
	03	D12A D12B
	04	E02A E02B E02C E36A E36B
	05	F21A F21B F21C
	06	G12A G12B G16A G38A G38B
	07	H06Z
	08	I27A I27B I27C I27D
	09	J11A J11B
	10	K09A K09B
	11	L09A L09B
	12	M06Z M37Z
	13	N11A N11B
	21B	X06A X06B X06C
83.8A.30↔		BORP MBOR VAC VAC I VAC II VB VBOR
	01	B17A B17B
	03	D12A D12B
	04	E36A E36B
	05	F04Z F13A F13B F13C F21A F21B F21C
	06	G12A G12B G16A G38A G38B
	08	I02A I02B I02C I12A I12B I12C I22Z I28A I28B I28C I32C I50Z
	09	J02A J02B J03A J03B J04Z J08Z J10A J10B J21Z J22Z
	21B	X01A X01B X04Z X05Z X06A X06B X06C X07A X07B
	22	Y02A Y02B Y02C
	Prä	B61B B61C B61D
83.8A.31↔		BORP MBOR VAC VAC I VAC II VB VBOR
	01	B17A B17B
	04	E36A E36B
	05	F04Z F13A F13B F13C F21A F21B F21C
	06	G12A G12B G16A G38A G38B
	08	I02A I02B I02C I12A I12B I12C I22Z I28A I28B I28C I32C I50Z
	09	J02A J02B J03A J03B J04Z J08Z J10A J10B J21Z J22Z
	21B	X01A X01B X04Z X05Z X06A X06B X06C X07A X07B
	22	Y02A Y02B Y02C
	Prä	B61B B61C B61D
83.8A.32↔		BORP MBOR VAC VAC I VAC II VB VBOR
	01	B17A B17B
	04	E36A E36B
	05	F04Z F13A F13B F13C F21A F21B F21C
	06	G12A G12B G16A G38A G38B
	08	I02A I02B I02C I12A I12B I12C I22Z I28A I28B I28C I32C I50Z
	09	J02A J02B J03A J03B J04Z J08Z J10A J10B J21Z J22Z
	21B	X01A X01B X04Z X05Z X06A X06B X06C X07A X07B
	22	Y02A Y02B Y02C
	Prä	B61B B61C B61D
83.8A.33↔		BORP MBOR VAC VAC I VAC II VB VBOR
	01	B17A B17B
	04	E36A E36B
	05	F04Z F13A F13B F13C F21A F21B F21C
	06	G12A G12B G16A G38A G38B
	08	I02A I02B I02C I12A I12B I12C I22Z I28A I28B I28C I32A I32B I32C I32D I32E I32F I50Z
	09	J02A J02B J03A J03B J04Z J08Z J10A J10B J21Z J22Z
	21B	X01A X01B X04Z X05Z X06A X06B X06C X07A X07B
	22	Y02A Y02B Y02C
	Prä	B61B B61C B61D
83.8A.34↔		BORP MBOR VAC VAC I VAC II VB VBOR
	01	B17A B17B
	04	E36A E36B
	05	F04Z F13A F13B F13C F21A F21B F21C
	06	G12A G12B G16A G38A G38B
	08	I02A I02B I02C I12A I12B I12C I22Z I28A I28B I28C I32C I50Z
	09	J02A J02B J03A J03B J04Z J08Z J10A J10B J21Z J22Z
	21B	X01A X01B X04Z X05Z X06A X06B X06C X07A X07B
	22	Y02A Y02B Y02C
	Prä	B61B B61C B61D
83.8A.35↔		BORP MBOR VAC VAC I VAC II VB VBOR
	01	B17A B17B
	04	E36A E36B
	05	F04Z F13A F13B F13C F21A F21B F21C
	06	G12A G12B G16A G38A G38B
	08	I02A I02B I02C I12A I12B I12C I22Z I28A I28B I28C I32C I50Z
	09	J02A J02B J03A J03B J04Z J08Z J10A J10B J21Z J22Z
	21B	X01A X01B X04Z X05Z X06A X06B X06C X07A X07B
	22	Y02A Y02B Y02C
	Prä	B61B B61C B61D
83.8A.36↔		BORP MBOR VAC VAC I VAC II VB VBOR
	01	B17A B17B
	04	E36A E36B
	05	F04Z F13A F13B F13C F21A F21B F21C
	06	G12A G12B G16A G38A G38B
	08	I02A I02B I02C I12A I12B I12C I22Z I28A I28B I28C I32C I50Z
	09	J02A J02B J03A J03B J04Z J08Z J10A J10B J21Z J22Z
	21B	X01A X01B X04Z X05Z X06A X06B X06C X07A X07B
	22	Y02A Y02B Y02C
	Prä	B61B B61C B61D
83.8A.39↔		BORP MBOR VAC VAC I VAC II VB VBOR
	01	B17A B17B
	03	D12A D12B
	04	E36A E36B
	05	F04Z F13A F13B F13C F21A F21B F21C
	06	G12A G12B G16A G38A G38B
	08	I02A I02B I02C I12A I12B I12C I22Z I28A I28B I28C I32C I50Z
	09	J02A J02B J03A J03B J04Z J08Z J10A J10B J21Z J22Z
	21B	X01A X01B X04Z X05Z X06A X06B X06C X07A X07B
	22	Y02A Y02B Y02C
	Prä	B61B B61C B61D
83.91.10↔		BORP MBOR VAC VBOR
	01	B17A B17B
	03	D12A D12B
	04	E02A E02B E02C E36A E36B

PROC

PROC

CHOP	MDC	DRG
	05	F21A F21B F21C
	06	G12A G12B G16A G38A G38B
	07	H06Z
	08	I29A I29B I29C
	09	J11A J11B
	10	K09A K09B
	11	L09A L09B
	12	M06Z M37Z
	13	N11A N11B
	21B	X06A X06B X06C
83.91.11↔		BORP MBOR VAC VBOR
	01	B17A B17B
	03	D12A D12B
	04	E02A E02B E02C E36A E36B
	05	F21A F21B F21C
	06	G12A G12B G16A G38A G38B
	07	H06Z
	08	I29A I29B I29C
	09	J11A J11B
	10	K09A K09B
	11	L09A L09B
	12	M06Z M37Z
	13	N11A N11B
	21B	X06A X06B X06C
83.91.12↔		BORP MBOR VAC VBOR
	01	B17A B17B
	03	D12A D12B
	04	E02A E02B E02C E36A E36B
	05	F21A F21B F21C
	06	G12A G12B G16A G38A G38B
	07	H06Z
	08	I29A I29B I29C
	09	J11A J11B
	10	K09A K09B
	11	L09A L09B
	12	M06Z M37Z
	13	N11A N11B
	21B	X06A X06B X06C
83.91.13↔		BORP MBOR VAC VBOR
	01	B17A B17B
	03	D12A D12B
	04	E02A E02B E02C E36A E36B
	05	F21A F21B F21C
	06	G12A G12B G16A G38A G38B
	07	H06Z
	08	I27A I27B I27C I27D
	09	J11A J11B
	10	K09A K09B
	11	L09A L09B
	12	M06Z M37Z
	13	N11A N11B
	21B	X06A X06B X06C
83.91.14↔		BORP MBOR VAC VBOR
	01	B17A B17B
	03	D12A D12B
	04	E02A E02B E02C E36A E36B
	05	F21A F21B F21C
	06	G12A G12B G16A G38A G38B
	07	H06Z
	08	I27A I27B I27C I27D
	09	J11A J11B
	10	K09A K09B
	11	L09A L09B
	12	M06Z M37Z
	13	N11A N11B
	21B	X06A X06B X06C
83.91.15↔		BORP MBOR VAC VBOR
	01	B17A B17B
	03	D12A D12B
	04	E02A E02B E02C E36A E36B
	05	F21A F21B F21C
	06	G12A G12B G16A G38A G38B
	07	H06Z
	08	I27A I27B I27C I27D
	09	J11A J11B
	10	K09A K09B
	11	L09A L09B
	12	M06Z M37Z
	13	N11A N11B
	21B	X06A X06B X06C
83.91.16↔		BORP MBOR VAC VBOR
	01	B17A B17B
	03	D12A D12B
	04	E02A E02B E02C E36A E36B
	05	F21A F21B F21C
	06	G12A G12B G16A G38A G38B
	07	H06Z
	08	I27A I27B I27C I27D
	09	J11A J11B
	10	K09A K09B
	11	L09A L09B
	12	M06Z M37Z
	13	N11A N11B
	21B	X06A X06B X06C
83.92↔	01	B17A B17B
	03	D12A
	06	G11A G11B
	08	I28A I28B
	11	L03Z L04A L04B L10A L10B L38Z
	12	M06Z M09A M09B M37Z
	13	N11A N11B
83.99.10↔		BORP MBOR VAC VBOR
	01	B17A B17B
	03	D12A D12B
	04	E02A E02B E02C E36A E36B
	05	F21A F21B F21C
	06	G12A G12B G16A G38A G38B
	07	H06Z
	08	I29A I29B I29C
	09	J11A J11B
	10	K09A K09B
	11	L09A L09B
	12	M06Z M37Z
	13	N11A N11B
	21B	X06A X06B X06C
83.99.11↔		BORP MBOR VAC VBOR
	01	B17A B17B
	03	D12A D12B
	04	E02A E02B E02C E36A E36B
	05	F21A F21B F21C
	06	G12A G12B G16A G38A G38B
	07	H06Z
	08	I29A I29B I29C
	09	J11A J11B
	10	K09A K09B
	11	L09A L09B
	12	M06Z M37Z
	13	N11A N11B
	21B	X06A X06B X06C
83.99.12↔		BORP MBOR VAC VBOR
	01	B17A B17B
	03	D12A D12B
	04	E02A E02B E02C E36A E36B
	05	F21A F21B F21C
	06	G12A G12B G16A G38A G38B
	07	H06Z
	08	I29A I29B I29C
	09	J11A J11B
	10	K09A K09B
	11	L09A L09B
	12	M06Z M37Z
	13	N11A N11B
	21B	X06A X06B X06C
83.99.13↔		BORP MBOR VAC VBOR
	01	B17A B17B
	03	D12A D12B
	04	E02A E02B E02C E36A E36B
	05	F21A F21B F21C
	06	G12A G12B G16A G38A G38B
	07	H06Z
	08	I27A I27B I27C I27D
	09	J11A J11B
	10	K09A K09B
	11	L09A L09B
	12	M06Z M37Z
	13	N11A N11B
	21B	X06A X06B X06C
83.99.14↔		BORP MBOR VAC VBOR
	01	B17A B17B
	03	D12A D12B
	04	E02A E02B E02C E36A E36B
	05	F21A F21B F21C
	06	G12A G12B G16A G38A G38B
	07	H06Z
	08	I27A I27B I27C I27D
	09	J11A J11B
	10	K09A K09B
	11	L09A L09B

CHOP	MDC	DRG
	12	M06Z M37Z
	13	N11A N11B
	21B	X06A X06B X06C
83.99.15↔		BORP MBOR VAC VBOR
	01	B17A B17B
	03	D12A D12B
	04	E02A E02B E02C E36A E36B
	05	F21A F21B F21C
	06	G12A G12B G16A G38A G38B
	07	H06Z
	08	I27A I27B I27C I27D
	09	J11A J11B
	10	K09A K09B
	11	L09A L09B
	12	M06Z M37Z
	13	N11A N11B
	21B	X06A X06B X06C
83.99.16↔		BORP MBOR VAC VBOR
	01	B17A B17B
	03	D12A D12B
	04	E02A E02B E02C E36A E36B
	05	F21A F21B F21C
	06	G12A G12B G16A G38A G38B
	07	H06Z
	08	I27A I27B I27C I27D
	09	J11A J11B
	10	K09A K09B
	11	L09A L09B
	12	M06Z M37Z
	13	N11A N11B
	21B	X06A X06B X06C
83.99.20↔		BORP MBOR VAC VBOR
	01	B17A B17B
	03	D12A D12B
	04	E02A E02B E02C E36A E36B
	05	F21A F21B F21C
	06	G12A G12B G16A G38A G38B
	07	H06Z
	08	I29A I29B I29C
	09	J11A J11B
	10	K09A K09B
	11	L09A L09B
	12	M06Z M37Z
	13	N11A N11B
	21B	X06A X06B X06C
83.99.21↔		BORP MBOR VAC VBOR
	01	B17A B17B
	03	D12A D12B
	04	E02A E02B E02C E36A E36B
	05	F21A F21B F21C
	06	G12A G12B G16A G38A G38B
	07	H06Z
	08	I29A I29B I29C
	09	J11A J11B
	10	K09A K09B
	11	L09A L09B
	12	M06Z M37Z
	13	N11A N11B
	21B	X06A X06B X06C
83.99.22↔		BORP MBOR VAC VBOR
	01	B17A B17B
	03	D12A D12B
	04	E02A E02B E02C E36A E36B
	05	F21A F21B F21C
	06	G12A G12B G16A G38A G38B
	07	H06Z
	08	I29A I29B I29C
	09	J11A J11B
	10	K09A K09B
	11	L09A L09B
	12	M06Z M37Z
	13	N11A N11B
	21B	X06A X06B X06C
83.99.23↔		BORP MBOR VAC VBOR
	01	B17A B17B
	03	D12A D12B
	04	E02A E02B E02C E36A E36B
	05	F21A F21B F21C
	06	G12A G12B G16A G38A G38B
	07	H06Z
	08	I27A I27B I27C I27D
	09	J11A J11B
	10	K09A K09B
	11	L09A L09B
	12	M06Z M37Z
	13	N11A N11B
	21B	X06A X06B X06C
83.99.24↔		BORP MBOR VAC VBOR
	01	B17A B17B
	03	D12A D12B
	04	E02A E02B E02C E36A E36B
	05	F21A F21B F21C
	06	G12A G12B G16A G38A G38B
	07	H06Z
	08	I27A I27B I27C I27D
	09	J11A J11B
	10	K09A K09B
	11	L09A L09B
	12	M06Z M37Z
	13	N11A N11B
	21B	X06A X06B X06C
83.99.25↔		BORP MBOR VAC VBOR
	01	B17A B17B
	03	D12A D12B
	04	E02A E02B E02C E36A E36B
	05	F21A F21B F21C
	06	G12A G12B G16A G38A G38B
	07	H06Z
	08	I27A I27B I27C I27D
	09	J11A J11B
	10	K09A K09B
	11	L09A L09B
	12	M06Z M37Z
	13	N11A N11B
	21B	X06A X06B X06C
83.99.26↔		BORP MBOR VAC VBOR
	01	B17A B17B
	03	D12A D12B
	04	E02A E02B E02C E36A E36B
	05	F21A F21B F21C
	06	G12A G12B G16A G38A G38B
	07	H06Z
	08	I27A I27B I27C I27D
	09	J11A J11B
	10	K09A K09B
	11	L09A L09B
	12	M06Z M37Z
	13	N11A N11B
	21B	X06A X06B X06C
83.99.30↔		BORP MBOR VAC VBOR
	01	B17A B17B
	03	D12A D12B
	04	E02A E02B E02C E36A E36B
	05	F21A F21B F21C
	06	G12A G12B G16A G38A G38B
	07	H06Z
	08	I27A I27B I27C I27D
	09	J11A J11B
	10	K09A K09B
	11	L09A L09B
	12	M06Z M37Z
	13	N11A N11B
	21B	X06A X06B X06C
84.00↔		BORP KORP MBOR MKOR VAC VAC I VAC II VBOR VKOR
	04	E36A E36B
	05	F04Z F13A F13B F13C
	06	G12A G16A G38A G38B
	08	I02A I02B I02C I07A I07B
	09	J02A J02B J03A J03B J04Z J11A J11B
	21B	X06A X06B X06C
	22	Y02A Y02B Y02C
84.01↔		BORP MBOR VAC VAC I VAC II VBOR
	04	E36A E36B
	05	F04Z F13A F13B F13C
	06	G12A G16A G38A G38B
	08	I02A I02B I02C I32A I32B I32C I32D I32E I32F
	09	J02A J02B J03A J03B J04Z J11A J11B
	21B	X05Z
	22	Y02A Y02B Y02C

PROC

PROC

CHOP	MDC	DRG
84.02↔		BORP MBOR VAC VAC I VAC II VBOR
	04	E36A E36B
	05	F04Z F13A F13B F13C
	06	G12A G16A G38A G38B
	08	I02A I02B I02C I32A I32B I32C I32D I32E I32F
	09	J02A J02B J03A J03B J04Z J11A J11B
	21B	X05Z
	22	Y02A Y02B Y02C
84.03.00↔		BORP KORP MBOR MKOR VAC VAC I VAC II VBOR VKOR
	04	E36A E36B
	05	F04Z F13A F13B F13C
	06	G12A G16A G38A G38B
	08	I02A I02B I02C I07A I07B
	09	J02A J02B J03A J03B J04Z J11A J11B
	21B	X05Z
	22	Y02A Y02B Y02C
84.03.10↔		BORP KORP MBOR MKOR VAC VAC I VAC II VBOR VKOR
	04	E36A E36B
	05	F04Z F13A F13B F13C
	06	G12A G16A G38A G38B
	08	I02A I02B I02C I07A I07B
	09	J02A J02B J03A J03B J04Z J11A J11B
	21B	X05Z
	22	Y02A Y02B Y02C
84.03.99↔		BORP KORP MBOR MKOR VAC VAC I VAC II VBOR VKOR
	04	E36A E36B
	05	F04Z F13A F13B F13C
	06	G12A G16A G38A G38B
	08	I02A I02B I02C I07A I07B
	09	J02A J02B J03A J03B J04Z J11A J11B
	21B	X05Z
	22	Y02A Y02B Y02C
84.04↔		BORP KORP MBOR MKOR VAC VAC I VAC II VBOR VKOR
	04	E36A E36B
	05	F04Z F13A F13B F13C
	06	G12A G16A G38A G38B
	08	I02A I02B I02C I07A I07B
	09	J02A J02B J03A J03B J04Z J11A J11B
	21B	X05Z
	22	Y02A Y02B Y02C
84.05↔		BORP KORP MBOR MKOR VAC VAC I VAC II VBOR VKOR
	04	E36A E36B
	05	F04Z F13A F13B F13C
	06	G12A G16A G38A G38B
	08	I02A I02B I02C I07A I07B
	09	J02A J02B J03A J03B J04Z J11A J11B
	21B	X06A X06B X06C
	22	Y02A Y02B Y02C
84.06↔		BORP KORP MBOR MKOR VAC VAC I VAC II VBOR VKOR
	04	E36A E36B
	05	F04Z F13A F13B F13C
	06	G12A G16A G38A G38B
	08	I02A I02B I02C I07A I07B
	09	J02A J02B J03A J03B J04Z J11A J11B
	21B	X06A X06B X06C
	22	Y02A Y02B Y02C
84.07↔		BORP KORP MBOR MKOR VAC VAC I VAC II VBOR VKOR
	04	E36A E36B
	05	F04Z F13A F13B F13C
	06	G12A G16A G38A G38B
	08	I02A I02B I02C I07A I07B
	09	J02A J02B J03A J03B J04Z J11A J11B
	21B	X06A X06B X06C
	22	Y02A Y02B Y02C
84.08↔		BORP KORP MBOR MKOR VAC VAC I VAC II VBOR VKOR
	04	E36A E36B
	05	F04Z F13A F13B F13C
	06	G12A G16A G38A G38B
	08	I02A I02B I02C I07A I07B
	09	J02A J02B J03A J03B J04Z J11A J11B
	21B	X06A X06B X06C
	22	Y02A Y02B Y02C
84.09↔		BORP KORP MBOR MKOR VAC VAC I VAC II VBOR VKOR
	04	E36A E36B
	05	F04Z F13A F13B F13C
	06	G12A G16A G38A G38B
	08	I02A I02B I02C I07A I07B
	09	J02A J02B J03A J03B J04Z J11A J11B
	21B	X06A X06B X06C
	22	Y02A Y02B Y02C
84.10↔		BORP KORP MBOR MKOR VAC VAC I VAC II VBOR VKOR
	04	E36A E36B
	05	F04Z F13A F13B F13C F28A F28B F28C
	06	G12A G16A G38A G38B
	08	I02A I02B I02C I07A I07B
	09	J02A J02B J03A J03B J04Z J11A J11B
	21B	X04Z
	22	Y02A Y02B Y02C
84.11↔		BORP MBOR VAC VAC I VAC II VBOR
	04	E36A E36B
	05	F04Z F13A F13B F13C
	06	G12A G16A G38A G38B
	08	I20A I20B I20C I20D I20E I20F I20G
	09	J02A J02B J03A J03B J04Z J11A J11B
	21B	X04Z
	22	Y02A Y02B Y02C
84.12↔		BORP KORP MBOR MKOR VAC VAC I VAC II VBOR VKOR
	04	E36A E36B
	05	F04Z F13A F13B F13C F28A F28B F28C
	06	G12A G16A G38A G38B
	08	I02A I02B I02C I07A I07B
	09	J02A J02B J03A J03B J04Z J11A J11B
	21B	X04Z
	22	Y02A Y02B Y02C
84.13↔		BORP KORP MBOR MKOR VAC VAC I VAC II VBOR VKOR
	04	E36A E36B
	05	F04Z F13A F13B F13C
	06	G12A G16A G38A G38B
	08	I02A I02B I02C I07A I07B
	09	J02A J02B J03A J03B J04Z J11A J11B

CHOP	MDC	DRG
	21B	X04Z
	22	Y02A Y02B Y02C
84.14↔		BORP KORP MBOR MKOR VAC VAC I VAC II VBOR VKOR
	04	E36A E36B
	05	F04Z F13A F13B F13C F28A F28B F28C
	06	G12A G16A G38A G38B
	08	I02A I02B I02C I07A I07B
	09	J02A J02B J03A J03B J04Z J11A J11B
	21B	X04Z
	22	Y02A Y02B Y02C
84.15↔		BORP KORP MBOR MKOR VAC VAC I VAC II VBOR VKOR
	04	E36A E36B
	05	F04Z F13A F13B F13C F28A F28B F28C
	06	G12A G16A G38A G38B
	08	I02A I02B I02C I07A I07B
	09	J02A J02B J03A J03B J04Z J11A J11B
	21B	X04Z
	22	Y02A Y02B Y02C
84.16↔		BORP KORP MBOR MKOR VAC VAC I VAC II VBOR VKOR
	04	E36A E36B
	05	F04Z F13A F13B F13C F28A F28B F28C
	06	G12A G16A G38A G38B
	08	I02A I02B I02C I07A I07B
	09	J02A J02B J03A J03B J04Z J11A J11B
	21B	X04Z
	22	Y02A Y02B Y02C
84.17↔		BORP KORP MBOR MKOR VAC VAC I VAC II VBOR VKOR
	04	E36A E36B
	05	F04Z F13A F13B F13C F28A F28B F28C
	06	G12A G16A G38A G38B
	08	I02A I02B I02C I07A I07B
	09	J02A J02B J03A J03B J04Z J11A J11B
	21B	X04Z
	22	Y02A Y02B Y02C
84.18↔		BORP KORP MBOR MKOR VAC VAC I VAC II VBOR VKOR
	04	E36A E36B
	05	F04Z F13A F13B F28A F28B F28C
	06	G12A G16A G38A G38B
	08	I02A I02B I02C I07A I07B
	09	J02A J02B J03A J03B J04Z J11A J11B
	21B	X04Z
	22	Y02A Y02B Y02C
84.19↔		BORP KORP MBOR MKOR VAC VAC I VAC II VBOR VKOR
	04	E36A E36B
	05	F04Z F13A F13B F28A F28B F28C
	06	G12A G16A G38A G38B
	08	I02A I02B I02C I07A I07B
	09	J02A J02B J03A J03B J04Z J11A J11B
	21B	X04Z
	22	Y02A Y02B Y02C
84.20↔		BORP EML KORP MBOR MKOR VAC VAC I VAC II VBOR VKOR
	04	E36A E36B
	05	F04Z F13A F13B
	06	G12A G16A G38A G38B
	08	I02A I02B I02C I22Z I32A I32B I32C I32D I32E I32F I50Z
	21B	X01A X01B X05Z X07A X07B
84.21↔		BORP EML KORP MBOR MKOR VAC VAC I VAC II VBOR VKOR
	04	E36A E36B
	05	F04Z F13A F13B
	06	G12A G16A G38A G38B
	08	I02A I02B I02C I22Z I32A I32B I32C I32D I32E I32F I50Z
	21B	X01A X01B X05Z X07A X07B
84.22↔		BORP EML KORP MBOR MKOR VAC VAC I VAC II VBOR VKOR
	04	E36A E36B
	05	F04Z F13A F13B
	06	G12A G16A G38A G38B
	08	I02A I02B I02C I22Z I32A I32B I32C I32D I32E I32F I50Z
	21B	X01A X01B X05Z X07A X07B
84.23.00↔		BORP EML KORP MBOR MKOR VAC VAC I VAC II VBOR VKOR
	04	E36A E36B
	05	F04Z F13A F13B
	06	G12A G16A G38A G38B
	08	I02A I02B I02C I22Z I32A I32B I32C I32D I32E I32F I50Z
	21B	X01A X01B X05Z X07A X07B
84.23.10↔		BORP EML KORP MBOR MKOR VAC VAC I VAC II VBOR VKOR
	04	E36A E36B
	05	F04Z F13A F13B
	06	G12A G16A G38A G38B
	08	I02A I02B I02C I22Z I32A I32B I32C I32D I32E I32F I50Z
	21B	X01A X01B X05Z X07A X07B
84.23.12↔		BORP EML KORP MBOR MKOR VAC VAC I VAC II VBOR VKOR
	04	E36A E36B
	05	F04Z F13A F13B
	06	G12A G16A G38A G38B
	08	I02A I02B I02C I22Z I32A I32B I32C I32D I32E I32F I50Z
	21B	X01A X01B X05Z X07A X07B
84.23.13↔		BORP EML KORP MBOR MKOR VAC VAC I VAC II VBOR VKOR
	04	E36A E36B
	05	F04Z F13A F13B
	06	G12A G16A G38A G38B
	08	I02A I02B I02C I22Z I32A I32B I32C I32D I32E I32F I50Z
	21B	X01A X01B X05Z X07A X07B
84.23.99↔		BORP EML KORP MBOR MKOR VAC VAC I VAC II VBOR VKOR
	04	E36A E36B
	05	F04Z F13A F13B
	06	G12A G16A G38A G38B
	08	I02A I02B I02C I22Z I32A I32B I32C I32D I32E I32F I50Z
	21B	X01A X01B X05Z X07A X07B
84.24.00↔		BORP EML KORP MBOR MKOR VAC

PROC

CHOP	MDC	DRG
		VAC I VAC II VBOR VKOR
	04	E36A E36B
	05	F04Z F13A F13B
	06	G12A G16A G38A G38B
	08	I02A I02B I02C I22Z I50Z
	21B	X01A X01B X07A X07B
84.24.11↔		BORP EML KORP MBOR MKOR VAC VAC I VAC II VBOR VKOR
	04	E36A E36B
	05	F04Z F13A F13B
	06	G12A G16A G38A G38B
	08	I02A I02B I02C I22Z I50Z
	21B	X01A X01B X07A X07B
84.24.12↔		BORP EML KORP MBOR MKOR VAC VAC I VAC II VBOR VKOR
	04	E36A E36B
	05	F04Z F13A F13B
	06	G12A G16A G38A G38B
	08	I02A I02B I02C I22Z I50Z
	21B	X01A X01B X07A X07B
84.24.99↔		BORP EML KORP MBOR MKOR VAC VAC I VAC II VBOR VKOR
	04	E36A E36B
	05	F04Z F13A F13B
	06	G12A G16A G38A G38B
	08	I02A I02B I02C I22Z I50Z
	21B	X01A X01B X07A X07B
84.25↔		BORP EML KORP MBOR MKOR VAC VAC I VAC II VBOR VKOR
	04	E36A E36B
	05	F04Z F13A F13B
	06	G12A G16A G38A G38B
	08	I02A I02B I02C I20A I20B I20C I20D I20G I22Z I50Z
	21B	X01A X01B X04Z X07A X07B
84.26↔		BORP EML KORP MBOR MKOR VAC VAC I VAC II VBOR VKOR
	04	E36A E36B
	05	F04Z F13A F13B
	06	G12A G16A G38A G38B
	08	I02A I02B I02C I20A I20B I20C I20D I20G I22Z I50Z
	21B	X01A X01B X04Z X07A X07B
84.27.11↔		BORP EML KORP MBOR MKOR VAC VAC I VAC II VBOR VKOR
	04	E36A E36B
	05	F04Z F13A F13B
	06	G12A G16A G38A G38B
	08	I02A I02B I02C I22Z I50Z I59Z
	21B	X01A X01B X04Z X07A X07B
84.27.12↔		BORP EML KORP MBOR MKOR VAC VAC I VAC II VBOR VKOR
	04	E36A E36B
	05	F04Z F13A F13B
	06	G12A G16A G38A G38B
	08	I02A I02B I02C I22Z I50Z I59Z
	21B	X01A X01B X04Z X07A X07B
84.27.99↔		BORP EML KORP MBOR MKOR VAC VAC I VAC II VBOR VKOR
	04	E36A E36B
	05	F04Z F13A F13B
	06	G12A G16A G38A G38B
	08	I02A I02B I02C I22Z I50Z I59Z
	21B	X01A X01B X04Z X07A X07B
84.28↔		BORP EML KORP MBOR MKOR VAC VAC I VAC II VBOR VKOR
	04	E36A E36B
	05	F04Z F13A F13B
	06	G12A G16A G38A G38B
	08	I02A I02B I02C I08A I08B I08C I22Z I50Z
	21B	X01A X01B X04Z X07A X07B
84.29↔		BORP EML KORP MBOR MKOR VAC VAC I VAC II VBOR VKOR
	04	E36A E36B
	05	F04Z F13A F13B
	06	G12A G16A G38A G38B
	08	I02A I02B I02C I22Z I32A I32B I32C I32D I32E I32F I50Z
	21B	X01A X01B X05Z X07A X07B
84.3X.10↔		BORP MBOR VAC VAC I VAC II VBOR
	04	E36A E36B
	05	F04Z F13A F13B F13C
	06	G12A G16A G38A G38B
	08	I14A I14B
	09	J02A J02B J03A J03B J04Z J11A J11B
	21B	X04Z X05Z X06A X06B X06C
	22	Y02A Y02B Y02C
84.3X.11↔		BORP MBOR VAC VAC I VAC II VBOR
	04	E36A E36B
	05	F04Z F13A F13B F13C
	06	G12A G16A G38A G38B
	08	I14A I14B
	09	J02A J02B J03A J03B J04Z J11A J11B
	21B	X04Z X05Z X06A X06B X06C
	22	Y02A Y02B Y02C
84.3X.12↔		BORP MBOR VAC VAC I VAC II VBOR
	04	E36A E36B
	05	F04Z F13A F13B F13C
	06	G12A G16A G38A G38B
	08	I14A I14B
	09	J02A J02B J03A J03B J04Z J11A J11B
	21B	X04Z X05Z X06A X06B X06C
	22	Y02A Y02B Y02C
84.3X.13↔		BORP MBOR VAC VAC I VAC II VBOR
	04	E36A E36B
	05	F04Z F13A F13B F13C
	06	G12A G16A G38A G38B
	08	I14A I14B
	09	J02A J02B J03A J03B J04Z J11A J11B
	21B	X04Z X05Z X06A X06B X06C
	22	Y02A Y02B Y02C
84.3X.19↔		BORP MBOR VAC VAC I VAC II VBOR
	04	E36A E36B
	05	F04Z F13A F13B F13C
	06	G12A G16A G38A G38B
	08	I14A I14B
	09	J02A J02B J03A J03B J04Z J11A J11B
	21B	X04Z X05Z X06A X06B X06C
	22	Y02A Y02B Y02C
84.3X.99↔		BORP MBOR VAC VAC I VAC II VBOR
	04	E36A E36B

CHOP	MDC	DRG
	05	F04Z F13A F13B F13C
	06	G12A G16A G38A G38B
	08	I14A I14B
	09	J02A J02B J03A J03B J04Z J11A J11B
	21B	X04Z X05Z X06A X06B X06C
	22	Y02A Y02B Y02C
84.4A‡↔	01	B60A
	08	I73A
84.4B‡↔	01	B60A
	08	I73A
84.53.00↔		BORP MBOR VAC VAC I VAC II VBOR
	03	D25A D25B D28Z D29Z
	04	E02A E02B E02C E36A E36B
	06	G12A G16A G38A G38B
	08	I19Z
	09	J02A J02B J08Z
	21B	X04Z X05Z X06A X06B X06C
84.53.10↔		BORP MBOR VAC VAC I VAC II VBOR
	03	D25A D25B D28Z D29Z
	04	E02A E02B E02C E36A E36B
	06	G12A G16A G38A G38B
	08	I19Z
	09	J02A J02B J08Z
	21B	X04Z X05Z X06A X06B X06C
84.53.11↔		BORP MBOR VAC VAC I VAC II VBOR
	03	D25A D25B D28Z D29Z
	04	E02A E02B E02C E36A E36B
	06	G12A G16A G38A G38B
	08	I19Z
	09	J02A J02B J08Z
	21B	X04Z X05Z X06A X06B X06C
84.53.99↔		BORP MBOR VAC VAC I VAC II VBOR
	03	D25A D25B D28Z D29Z
	04	E02A E02B E02C E36A E36B
	06	G12A G16A G38A G38B
	08	I19Z
	09	J02A J02B J08Z
	21B	X04Z X05Z X06A X06B X06C
84.54↔		BORP MBOR VAC VAC I VAC II VBOR
	03	D25A D25B D28Z D29Z
	04	E02A E02B E02C E36A E36B
	06	G12A G16A G38A G38B
	08	I02A I02B I02C I12A I12B I12C I28A I28B
	09	J02A J02B J08Z
	21B	X04Z X05Z X06A X06B X06C
	Prä	B61B B61C B61D
84.71‡↔	01	B60A
	08	I08B I11Z I13A
84.72‡↔	Prä	B61B B61C B61D
	01	B60A
	08	I02A I02B I02C I07A I08B I11Z I12A I13A I13B
84.73‡↔	01	B60A
	08	I08B I11Z I13A
84.92↔		BORP KORP MBOR MKOR VAC VAC I VAC II VBOR VKOR
	04	E36A E36B
	06	G12A G16A G38A G38B
	08	I28A I28B
	Prä	A05Z A06A A06B A06C A07A A07B A07C
84.93↔		BORP KORP MBOR MKOR VAC VAC I VAC II VBOR VKOR
	04	E36A E36B
	06	G12A G16A G38A G38B
	08	I28A I28B
	Prä	A05Z A06A A06B A06C A07A A07B A07C
84.99.14↔		BORP EML KORP MBOR MKOR VAC VAC I VAC II VBOR VKOR
	04	E36A E36B
	05	F04Z F13A F13B
	06	G12A G16A G38A G38B
	08	I02A I02B I02C I22Z I50Z
	21B	X01A X01B X07A X07B
84.99.31↔		BORP EML KORP MBOR MKOR VAC VAC I VAC II VBOR VKOR
	04	E36A E36B
	05	F04Z F13A F13B
	06	G12A G16A G38A G38B
	08	I02A I02B I02C I22Z I32A I32B I32C I32D I32E I32F I50Z
	21B	X01A X01B X05Z X07A X07B
85.11‡↔		AKBB
	01	B60A
	16	Q86A
85.12↔	09	J24A J24B J25Z
	10	K09A K09B
	13	N23A N23B
	21B	X06A X06B X06C
85.20↔	09	J18A J23A J23B J24A J24B J25Z
	10	K09A K09B
	13	N23A N23B
	14	O02A O02B
	21B	X06A X06B X06C
85.24↔		BORP MBOR VAC VAC I VAC II VBOR
	04	E36A E36B
	06	G12A G16A G38A G38B
	09	J24A J24B J25Z
	13	N23A N23B
	19	U01A U01B
	21B	X06A X06B X06C
85.25↔		BORP MBOR VAC VAC I VAC II VBOR
	04	E36A E36B
	06	G12A G16A G38A G38B
	09	J24A J24B J25Z
	10	K09A K09B
	13	N23A N23B
	19	U01A U01B
	21B	X06A X06B
85.27↔	09	J18A J23A J23B J24A J24B J25Z
	10	K09A K09B
	13	N23A N23B
	14	O02A O02B
	19	U01A U01B
	21B	X06A X06B X06C
85.28↔	09	J18A J23A J23B J24A J24B J25Z
	10	K09A K09B
	13	N23A N23B
	14	O02A O02B
	19	U01A U01B
	21B	X06A X06B X06C
85.29↔	09	J18A J23A J23B J24A J24B J25Z
	10	K09A K09B
	13	N23A N23B
	14	O02A O02B
	21B	X06A X06B X06C
85.2A↔	09	J18A J23A J23B J24A J24B J25Z
	10	K09A K09B
	13	N23A N23B
	14	O02A O02B
	21B	X06A X06B X06C
85.2B↔	09	J18A J23A J23B J24A J24B J25Z
	10	K09A K09B
	13	N23A N23B
	14	O02A O02B
	21B	X06A X06B X06C
85.2C.11‡↔		BORP MBOR VAC VAC I VAC II VBOR
	01	B60A
	09	J11A J11B
85.2C.12↔		BORP MBOR VAC VAC I VAC II VBOR
	01	B17A B17B
	02	C14Z
	03	D12A D12B
	04	E02A E02B E02C E36A E36B
	05	F21A F21B F21C
	06	G12A G12B G16A

PROC

CHOP	MDC	DRG
		G38A G38B
	07	H06Z
	08	I02A I02B I02C I28A I28B I28C I32A I32B
	09	J02A J02B J11A J11B
	10	K09A K09B
	11	L09A L09B
	12	M06Z M09A M09B M37Z
	13	N11A N11B
	21B	X05Z
	22	Y02A Y02B Y02C
85.2C.22‡↔	01	B60A
	09	J02A J02B J60A
85.2C.32‡↔	01	B60A
	09	J02A J02B J60A
85.6↔		BORP MBOR VAC VAC I VAC II VBOR
	04	E36A E36B
	06	G12A G16A G38A G38B
	09	J24A J24B J25Z
	13	N23A N23B
	21B	X06A X06B
85.A0↔		BORP MBOR VAC VAC I VAC II VBOR
	04	E36A E36B
	06	G12A G16A G38A G38B
	09	J01A J01B J06A J06B J18A J23A J23B J24A J24B
	19	U01A U01B
	21B	X06A X06B X06C
85.A1↔		BORP MBOR VAC VAC I VAC II VBOR
	04	E36A E36B
	06	G12A G16A G38A G38B
	09	J01A J01B J06A J06B J18A J23A J23B J24A J24B
	21B	X06A X06B X06C
85.A2.11↔		BORP MBOR VAC VAC I VAC II VBOR
	04	E36A E36B
	06	G12A G16A G38A G38B
	09	J01A J01B J06A J06B J18A J23A J23B J24A J24B
	19	U01A U01B
	21B	X06A X06B X06C
85.A2.12↔		BORP MBOR VAC VAC I VAC II VBOR
	04	E36A E36B
	06	G12A G16A G38A G38B
	09	J01A J01B J06A J06B J18A J23A J23B J24A J24B
	19	U01A U01B
	21B	X06A X06B X06C
85.A3.11↔		BORP MBOR VAC VAC I VAC II VBOR
	04	E36A E36B
	06	G12A G16A G38A G38B
	09	J01A J01B J06A J06B J18A J23A J23B J24A J24B
	19	U01A U01B
	21B	X06A X06B X06C
85.A3.12↔		BORP MBOR VAC VAC I VAC II VBOR
	04	E36A E36B
	06	G12A G16A G38A G38B
	09	J01A J01B J06A J06B J18A J23A J23B J24A J24B
	19	U01A U01B
	21B	X06A X06B X06C
85.A4↔		BORP MBOR VAC VAC I VAC II VBOR
	04	E36A E36B
	06	G12A G16A G38A G38B
	09	J01A J01B J06A J06B J18A J23A J23B J24A J24B
	19	U01A U01B
	21B	X06A X06B X06C
85.A5↔		BORP MBOR VAC VAC I VAC II VBOR
	04	E36A E36B
	06	G12A G16A G38A G38B
	09	J01A J01B J06A J06B J18A J23A J23B J24A J24B
	21B	X06A X06B X06C
85.A6.11↔		BORP MBOR VAC VAC I VAC II VBOR
	04	E36A E36B
	06	G12A G16A G38A G38B
	09	J01A J01B J06A J06B J18A J23A J23B J24A J24B
	21B	X06A X06B X06C
85.A6.12↔		BORP MBOR VAC VAC I VAC II VBOR
	04	E36A E36B
	06	G12A G16A G38A G38B
	09	J01A J01B J06A J06B J18A J23A J23B J24A J24B
	21B	X06A X06B X06C
85.A7↔		BORP MBOR VAC VAC I VAC II VBOR
	04	E36A E36B
	06	G12A G16A G38A G38B
	09	J01A J01B J06A J06B J18A J23A J23B J24A J24B
	21B	X06A X06B X06C
85.A8↔		BORP MBOR VAC VAC I VAC II VBOR
	04	E36A E36B
	06	G12A G16A G38A G38B
	09	J01A J01B J06A J06B J18A J23A J23B J24A J24B
	19	U01A U01B
	21B	X06A X06B X06C
85.A9↔		BORP MBOR VAC VAC I VAC II VBOR
	04	E36A E36B
	06	G12A G16A G38A G38B
	09	J01A J01B J06A J06B J18A J23A J23B J24A J24B
	19	U01A U01B
	21B	X06A X06B X06C
85.B↔		BORP MBOR VAC VAC I VAC II VBOR
	04	E36A E36B
	06	G12A G16A G38A G38B
	09	J01A J01B J06A J06B J23A J23B J24A J25Z
	21B	X06A X06B
85.D1↔		BORP MBOR VAC VAC I VAC II VBOR
	04	E36A E36B
	06	G12A G16A G38A G38B
	09	J01A J01B J06A J06B J23A J23B J24A J25Z
	19	U01A U01B
	21B	X06A X06B
85.D2↔		BORP MBOR VAC VAC I VAC II VB VBOR
	04	E36A E36B
	05	F21A F21B F21C
	06	G12A G16A G38A G38B
	08	I28A I28B I28C
	09	J01A J01B J06A J06B J23A J23B J24A J25Z
	19	U01A U01B
	21B	X06A X06B
	22	Y02A Y02B Y02C
85.D9↔		BORP MBOR VAC VAC I VAC II VBOR
	04	E36A E36B
	06	G12A G16A G38A G38B
	09	J01A J01B J06A J06B J23A J23B J24A J24B J25Z
	19	U01A U01B
	21B	X06A X06B
85.E0↔		BORP MBOR VAC VAC I VAC II VB VBOR
	04	E36A E36B
	05	F21A F21B F21C
	06	G12A G16A G38A G38B
	08	I28A I28B I28C
	09	J01A J01B J06A J06B J23A J23B J24A J25Z
	19	U01A U01B
	21B	X06A X06B
	22	Y02A Y02B Y02C
85.E1↔		BORP MBOR VAC VAC I VAC II VB

CHOP	MDC	DRG
		VBOR
	04	E36A E36B
	05	F21A F21B F21C
	06	G12A G16A G38A G38B
	08	I28A I28B I28C
	09	J01A J01B J06A J06B J23A J23B J24A J25Z
	19	U01A U01B
	21B	X06A X06B
	22	Y02A Y02B Y02C
85.E2↔		BORP MBOR VAC VAC I VAC II VB VBOR
	04	E36A E36B
	05	F21A F21B F21C
	06	G12A G16A G38A G38B
	08	I28A I28B I28C
	09	J01A J01B J06A J06B J23A J23B J24A J25Z
	19	U01A U01B
	21B	X06A X06B
	22	Y02A Y02B Y02C
85.E9↔		BORP MBOR VAC VAC I VAC II VB VBOR
	04	E36A E36B
	05	F21A F21B F21C
	06	G12A G16A G38A G38B
	08	I28A I28B I28C
	09	J01A J01B J06A J06B J23A J23B J24A J25Z
	19	U01A U01B
	21B	X06A X06B
	22	Y02A Y02B Y02C
85.F1↔		BORP MBOR VAC VAC I VAC II VBOR
	04	E36A E36B
	06	G12A G16A G38A G38B
	09	J01A J01B J23A J23B J24A J25Z
	19	U01A U01B
	21B	X06A X06B
85.F2.00↔		BORP MBOR VAC VAC I VAC II VBOR
	04	E36A E36B
	06	G12A G16A G38A G38B
	09	J24A J24B J25Z
	13	N23A N23B
	19	U01A U01B
	21B	X06A X06B
85.F2.09↔		BORP MBOR VAC VAC I VAC II VBOR
	04	E36A E36B
	06	G12A G16A G38A G38B
	09	J01A J01B J23A J23B J24A J24B J25Z
	13	N23A N23B
	21B	X06A X06B
85.F2.11↔		BORP MBOR VAC VAC I VAC II VBOR
	04	E36A E36B
	06	G12A G16A G38A G38B
	09	J01A J01B J23A J23B J24A J24B J25Z
	13	N23A N23B
	19	U01A U01B
	21B	X06A X06B
85.F2.12↔		BORP MBOR VAC VAC I VAC II VBOR
	04	E36A E36B
	06	G12A G16A G38A G38B
	09	J01A J01B J23A J23B J24A J24B J25Z
	13	N23A N23B
	19	U01A U01B
	21B	X06A X06B
85.G1↔		BORP MBOR VAC VAC I VAC II VBOR
	04	E36A E36B
	06	G12A G16A G38A G38B
	09	J01A J01B J23A J23B J24A J24B J25Z
	13	N23A N23B
	19	U01A U01B
	21B	X06A X06B
85.G2↔		BORP MBOR VAC VAC I VAC II VBOR
	04	E36A E36B
	06	G12A G16A G38A G38B
	09	J24A J24B J25Z
	19	U01A U01B
	21B	X06A X06B
85.G4.12↔		BORP MBOR VAC VAC I VAC II VB VBOR
	04	E36A E36B
	05	F21A F21B F21C
	06	G12A G16A G38A G38B
	08	I28A I28B I28C
	09	J01A J01B J23A J23B J24A J24B J25Z
	13	N23A N23B
	19	U01A U01B
	21B	X06A X06B
	22	Y02A Y02B Y02C
85.G4.13↔	09	J01A J01B J23A J23B J24A J24B J25Z
85.G5.12↔		BORP MBOR VAC VAC I VAC II VB VBOR
	04	E36A E36B
	05	F21A F21B F21C
	06	G12A G16A G38A G38B
	08	I28A I28B I28C
	09	J01A J01B J23A J23B J24A J24B J25Z
	13	N23A N23B
	19	U01A U01B
	21B	X06A X06B
	22	Y02A Y02B Y02C
85.G5.13↔	09	J01A J01B J23A J23B J24A J24B J25Z
85.H0↔		VB
	05	F21A F21B F21C
	08	I28A I28B I28C
	09	J01A J01B J23A J23B J24A J24B J25Z
	21B	X06A X06B X06C
	22	Y02A Y02B Y02C
85.H1↔		BORP MBOR VAC VAC I VAC II VB VBOR
	04	E36A E36B
	05	F04Z F21A F21B F21C F28A
	06	G12A G16A G38A G38B
	08	I28A I28B I28C
	09	J01A J01B J14Z J23A J23B J24A J24B J25Z
	12	M09A M09B M37Z
	19	U01A U01B
	21B	X06A X06B
	22	Y02A Y02B Y02C
85.H2↔		BORP MBOR VAC VAC I VAC II VB VBOR
	01	B17A
	04	E36A E36B
	05	F21A F21B F21C
	06	G12A G12B G16A G38A G38B
	07	H06Z
	08	I28A I28B I28C
	09	J01A J01B J14Z J23A J23B J24A J24B J25Z
	12	M09A M09B M37Z
	19	U01A U01B
	21B	X06A X06B
	22	Y02A Y02B Y02C
85.H3.11‡↔	01	B60A
	05	F21A F21B F21C
	15	P03A P03B P04A P04B P04C P05A P05B P05C P05D P61A
	21B	X06A X06B X06C
	22	Y02A Y02B Y02C
85.H3.12‡↔	01	B60A
	05	F21A F21B F21C
	08	I28A
	09	J02A J02B J08Z
	15	P03A P03B P04A P04B P04C P05A P05B P05C P05D P61A
	21B	X06A X06B X06C
	22	Y02A Y02B Y02C
85.H9↔		VB
	05	F21A F21B F21C
	08	I28A I28B I28C
	09	J01A J01B J23A J23B J24A J24B J25Z

PROC

PROC

CHOP	MDC	DRG
	21B	X06A X06B X06C
	22	Y02A Y02B Y02C
85.I1↔		BORP MBOR VAC VAC I VAC II VBOR
	04	E36A E36B
	06	G12A G16A G38A G38B
	09	J01A J01B J23A J23B J24A
	19	U01A U01B
	21B	X06A X06B
85.I2↔		BORP KORP MBOR MKOR VAC VAC I VAC II VBOR VKOR
	04	E36A E36B
	06	G12A G16A G38A G38B
	09	J01A J01B J14Z J23A J23B J24A J25Z
	19	U01A U01B
	21B	X06A X06B
	22	Y02A Y02B Y02C
85.J1↔		BORP MBOR VAC VAC I VAC II VB VBOR
	04	E36A E36B
	05	F04Z F13A F13B F21A F21B F21C
	06	G12A G16A G38A G38B
	08	I28A I28B I28C I32C
	09	J02A J02B J04Z J08Z J21Z J22Z
	21B	X01A X01B X06A X06B X06C X07A X07B
	22	Y02A Y02B Y02C
85.J2↔		BORP MBOR VAC VAC I VAC II VBOR
	04	E36A E36B
	06	G12A G16A G38A G38B
	09	J01A J01B J23A J23B J24A J25Z
	19	U01A U01B
	21B	X06A X06B
85.K0↔		BORP MBOR VAC VAC I VAC II VBOR
	04	E36A E36B
	06	G12A G16A G38A G38B
	09	J01A J01B J23A J23B J24A
	19	U01A U01B
	21B	X06A X06B
85.K3.09↔		BORP KORP MBOR MKOR VAC VAC I VAC II VBOR VKOR
	03	D02A D02B D24A D24B
	04	E36A E36B
	05	F04Z
	06	G12A G16A G38A G38B
	08	I02A I02B I02C
	09	J01A J01B J02A J02B J14Z
	12	M37Z
	19	U01A U01B
	21A	W01A W01B
	21B	X01A X06A X06B X07A X07B
	22	Y02A Y02B
85.K3.11↔		BORP KORP MBOR MKOR VAC VAC I VAC II VBOR VKOR
	04	E36A E36B
	06	G12A G16A G38A G38B
	09	J01A J01B J02A J02B J14Z J23A J23B J24A
	19	U01A U01B
	21B	X06A X06B
	22	Y02A Y02B Y02C
85.K3.12↔		BORP KORP MBOR MKOR VAC VAC I VAC II VBOR VKOR
	03	D02A D02B D24A D24B
	04	E36A E36B
	05	F04Z
	06	G12A G16A G38A G38B
	08	I02A I02B I02C
	09	J01A J01B J02A J02B J14Z
	12	M37Z
	19	U01A U01B
	21A	W01A W01B
	21B	X01A X06A X06B X07A X07B
	22	Y02A Y02B Y02C
85.K4.09↔		BORP KORP MBOR MKOR VAC VAC I VAC II VB VBOR VKOR
	03	D02A D02B D24A D24B
	04	E36A E36B
	05	F04Z
	06	G12A G16A G38A G38B
	08	I02A I02B I02C
	09	J01A J01B J02A J02B J14Z
	12	M37Z
	19	U01A U01B
	21A	W01A W01B
	21B	X01A X06A X06B X07A X07B
	22	Y02A Y02B
85.K4.11↔		BORP KORP MBOR MKOR VAC VAC I VAC II VB VBOR VKOR
	03	D02A D02B D24A D24B
	04	E36A E36B
	05	F04Z
	06	G12A G16A G38A G38B
	08	I02A I02B I02C
	09	J01A J01B J02A J02B J14Z
	12	M37Z
	19	U01A U01B
	21A	W01A W01B
	21B	X01A X06A X06B X07A X07B
	22	Y02A Y02B
85.K4.12↔		BORP KORP MBOR MKOR VAC VAC I VAC II VB VBOR VKOR
	03	D02A D02B D24A D24B
	04	E36A E36B
	05	F04Z
	06	G12A G16A G38A G38B
	08	I02A I02B I02C
	09	J01A J01B J02A J02B J14Z
	12	M37Z
	19	U01A U01B
	21A	W01A W01B
	21B	X01A X06A X06B X07A X07B
	22	Y02A Y02B
85.K4.13↔		BORP KORP MBOR MKOR VAC VAC I VAC II VB VBOR VKOR
	03	D02A D02B D24A D24B
	04	E36A E36B
	05	F04Z
	06	G12A G16A G38A G38B
	08	I02A I02B I02C
	09	J01A J01B J02A J02B J14Z
	12	M37Z
	19	U01A U01B
	21A	W01A W01B
	21B	X01A X06A X06B X07A X07B
	22	Y02A Y02B
85.K4.14↔		BORP KORP MBOR MKOR VAC VAC I VAC II VB VBOR VKOR
	03	D02A D02B D24A D24B
	04	E36A E36B
	05	F04Z
	06	G12A G16A G38A G38B
	08	I02A I02B I02C
	09	J01A J01B J02A J02B J14Z
	12	M37Z
	19	U01A U01B
	21A	W01A W01B
	21B	X01A X06A X06B X07A X07B
	22	Y02A Y02B
85.K4.15↔		BORP KORP MBOR MKOR VAC VAC I VAC II VB VBOR VKOR
	03	D02A D02B D24A D24B
	04	E36A E36B
	05	F04Z
	06	G12A G16A G38A G38B

CHOP	MDC	DRG
	08	I02A I02B I02C
	09	J01A J01B J02A J02B J14Z
	12	M37Z
	19	U01A U01B
	21A	W01A W01B
	21B	X01A X06A X06B X07A X07B
	22	Y02A Y02B
85.K5↔		BORP KORP MBOR MKOR VAC VAC I VAC II VBOR VKOR
	04	E36A E36B
	06	G12A G16A G38A G38B
	09	J01A J01B J02A J02B J14Z J23A J23B J24A
	19	U01A U01B
	21B	X06A X06B
	22	Y02A Y02B Y02C
85.K6.13↔		BORP MBOR VAC VAC I VAC II VB VBOR
	01	B17A B17B
	04	E36A E36B
	05	F04Z F13A F13B F13C F21A F21B F21C
	06	G12A G12B G16A G38A G38B
	08	I02A I02B I02C I12A I12B I12C I22Z I28A I28B I28C I32C I50Z
	09	J02A J02B J03A J03B J04Z J08Z J10A J10B J21Z J22Z
	21B	X01A X01B X04Z X05Z X06A X06B X06C X07A X07B
	22	Y02A Y02B Y02C
	Prä	B61B B61C B61D
85.K9↔		BORP MBOR VAC VAC I VAC II VBOR
	04	E36A E36B
	06	G12A G16A G38A G38B
	09	J01A J01B J23A J23B J24A
	19	U01A U01B
	21B	X06A X06B
86.03‡↔	01	B60A
	09	J09A J09B
86.0B.11‡↔	01	B17A B17B B60A
	02	C14Z
	03	D12A D12B
	04	E02A E02B E02C
	05	F21A F21B F21C
	06	G12A G12B
	07	H06Z
	08	I28A I28B I28C
	10	K09A K09B
	11	L09A L09B
	12	M06Z M37Z
	13	N11A N11B
	18B	T01A T01B T01C T01D
	21B	X05Z

CHOP	MDC	DRG
86.20‡↔	01	B60A
	09	J11A J11B
86.21‡↔	01	B60A
	09	J09A J09B
86.29‡↔	01	B60A
	09	J11A J11B
86.2A.11‡↔		BORP MBOR VAC VAC I VAC II VBOR
	01	B60A
	09	J11A J11B
86.2A.16‡↔		BORP MBOR VAC VAC I VAC II VBOR
	01	B60A
	09	J11A J11B
86.2A.1D‡↔		BORP MBOR VAC VAC I VAC II VBOR
	01	B60A
	09	J11A J11B
86.2A.1E‡↔		BORP MBOR VAC VAC I VAC II VBOR
	01	B60A
	09	J11A J11B
86.2A.21‡↔		BORP MBOR VAC VAC I VAC II VBOR
	01	B17A B17B B60A
	02	C14Z
	03	D12A D12B
	04	E02A E02B E02C
	05	F21A F21B F21C
	06	G12A G12B
	07	H06Z
	08	I02A I02B I02C I28A I28B I32A I32B
	09	J02A J02B J11A J11B
	10	K09A K09B
	11	L09A L09B
	12	M06Z M37Z
	13	N11A N11B
	18B	T01A T01B T01C T01D
	21B	X05Z
	22	Y02A Y02B Y02C Y62A
86.2A.26‡↔		BORP MBOR VAC VAC I VAC II VBOR
	01	B17A B17B B60A
	02	C14Z
	03	D12A D12B
	04	E02A E02B E02C
	05	F21A F21B F21C
	06	G12A G12B
	07	H06Z
	08	I02A I02B I02C I28A I28B I32A I32B
	09	J02A J02B J11A J11B
	10	K09A K09B
	11	L09A L09B
	12	M06Z M37Z
	13	N11A N11B
	18B	T01A T01B T01C T01D
	21B	X05Z
	22	Y02A Y02B Y02C Y62A
86.2A.2D‡↔		BORP MBOR VAC VAC I VAC II VBOR

CHOP	MDC	DRG
	01	B17A B17B B60A
	02	C14Z
	03	D12A D12B
	04	E02A E02B E02C
	05	F21A F21B F21C
	06	G12A G12B
	07	H06Z
	08	I02A I02B I02C I28A I28B I32A I32B
	09	J02A J02B J11A J11B
	10	K09A K09B
	11	L09A L09B
	12	M06Z M37Z
	13	N11A N11B
	18B	T01A T01B T01C T01D
	21B	X05Z
	22	Y02A Y02B Y02C Y62A
86.2A.2E‡↔		BORP MBOR VAC VAC I VAC II VBOR
	01	B17A B17B B60A
	02	C14Z
	03	D12A D12B
	04	E02A E02B E02C
	05	F21A F21B F21C
	06	G12A G12B
	07	H06Z
	08	I02A I02B I02C I28A I28B I32A I32B
	09	J02A J02B J11A J11B
	10	K09A K09B
	11	L09A L09B
	12	M06Z M37Z
	13	N11A N11B
	18B	T01A T01B T01C T01D
	21B	X05Z
	22	Y02A Y02B Y02C Y62A
86.2A.31↔		BORP MBOR VAC VAC I VAC II VBOR
	01	B17A B17B
	02	C14Z
	03	D12A D12B
	04	E02A E02B E02C E36A E36B
	05	F21A F21B F21C
	06	G12A G12B G16A G38A G38B
	07	H06Z
	08	I02A I02B I02C I28A I28B I28C I32A I32B
	09	J02A J02B J11A J11B
	10	K09A K09B
	11	L09A L09B
	12	M06Z M09A M09B M37Z
	13	N11A N11B
	21B	X05Z
	22	Y02A Y02B Y02C
86.2A.36↔		BORP MBOR VAC VAC I VAC II VBOR
	01	B17A B17B

PROC

PROC

CHOP	MDC	DRG
	02	C14Z
	03	D12A D12B
	04	E02A E02B E02C
		E36A E36B
	05	F21A F21B F21C
	06	G12A G12B G16A
		G38A G38B
	07	H06Z
	08	I02A I02B I02C
		I28A I28B I28C
		I32A I32B
	09	J02A J02B J11A
		J11B
	10	K09A K09B
	11	L09A L09B
	12	M06Z M09A M09B
		M37Z
	13	N11A N11B
	21B	X05Z
	22	Y02A Y02B Y02C
86.2A.3D↔		BORP MBOR VAC
		VAC I VAC II VBOR
	01	B17A B17B
	02	C14Z
	03	D12A D12B
	04	E02A E02B E02C
		E36A E36B
	05	F21A F21B F21C
	06	G12A G12B G16A
		G38A G38B
	07	H06Z
	08	I02A I02B I02C
		I28A I28B I28C
		I32A I32B
	09	J02A J02B J11A
		J11B
	10	K09A K09B
	11	L09A L09B
	12	M06Z M09A M09B
		M37Z
	13	N11A N11B
	21B	X05Z
	22	Y02A Y02B Y02C
86.2A.3E↔		BORP MBOR VAC
		VAC I VAC II VBOR
	01	B17A B17B
	02	C14Z
	03	D12A D12B
	04	E02A E02B E02C
		E36A E36B
	05	F21A F21B F21C
	06	G12A G12B G16A
		G38A G38B
	07	H06Z
	08	I02A I02B I02C
		I28A I28B I28C
		I32A I32B
	09	J02A J02B J11A
		J11B
	10	K09A K09B
	11	L09A L09B
	12	M06Z M09A M09B
		M37Z
	13	N11A N11B
	21B	X05Z
	22	Y02A Y02B Y02C
86.2B.21‡↔	01	B60A
	09	J02A J02B J60A
86.2B.26‡↔	01	B60A
	09	J02A J02B J60A

CHOP	MDC	DRG
86.2B.2D‡↔	01	B60A
	09	J02A J02B J60A
86.2B.2E‡↔	01	B60A
	09	J02A J02B J60A
86.2B.41‡↔	01	B60A
	09	J02A J02B J60A
86.2B.46‡↔	01	B60A
	09	J02A J02B J60A
86.2B.4D‡↔	01	B60A
	09	J02A J02B J60A
86.2B.4E‡↔	01	B60A
	09	J02A J02B J60A
86.2C.11‡↔	01	B60A
	09	J11A J11B
86.2C.16‡↔	01	B60A
	09	J11A J11B
86.2C.1D‡↔	01	B60A
	09	J11A J11B
86.2C.1E‡↔	01	B60A
	09	J11A J11B
86.2C.21‡↔	01	B60A
	09	J11A J11B
86.2C.26‡↔	01	B60A
	09	J11A J11B
86.2C.2D‡↔	01	B60A
	09	J11A J11B
86.2C.2E‡↔	01	B60A
	09	J11A J11B
86.2C.31‡↔	01	B60A
	09	J11A J11B
86.2C.36‡↔	01	B60A
	09	J11A J11B
86.2C.3D‡↔	01	B60A
	09	J11A J11B
86.2C.3E‡↔	01	B60A
	09	J11A J11B
86.2C.41‡↔	01	B60A
	09	J11A J11B
86.2C.46‡↔	01	B60A
	09	J11A J11B
86.2C.4D‡↔	01	B60A
	09	J11A J11B
86.2C.4E‡↔	01	B60A
	09	J11A J11B
86.2C.51‡↔	01	B60A
	09	J11A J11B
86.2C.56‡↔	01	B60A
	09	J11A J11B
86.2C.5D‡↔	01	B60A
	09	J11A J11B
86.2C.5E‡↔	01	B60A
	09	J11A J11B
86.2C.61‡↔	01	B60A
	09	J11A J11B
86.2C.66‡↔	01	B60A
	09	J11A J11B
86.2C.6D‡↔	01	B60A
	09	J11A J11B
86.2C.6E‡↔	01	B60A
	09	J11A J11B
86.32.11‡↔	01	B60A
	09	J11A J11B
86.32.16‡↔	01	B60A
	09	J11A J11B
86.32.1D‡↔	01	B60A
	09	J11A J11B
86.32.1E‡↔	01	B60A
	09	J11A J11B
86.33.11‡↔	01	B60A
	09	J11A J11B

CHOP	MDC	DRG
86.33.16‡↔	01	B60A
	09	J11A J11B
86.33.1D‡↔	01	B60A
	09	J11A J11B
86.33.1E‡↔	01	B60A
	09	J11A J11B
86.39‡↔	01	B60A
	09	J11A J11B
86.41.11↔		BORP MBOR VAC
		VAC I VAC II VBOR
	01	B17A B17B
	02	C14Z
	03	D08Z D12A D22Z
		D25A D25B D30A
		D30B D30C
	04	E36A E36B
	05	F04Z F13A F13B
		F21A F21B F21C
	06	G12A G16A G38A
		G38B
	08	I28A I28B I28C
	09	J02A J02B J03A
		J03B J04Z J08Z
		J11A J11B J21Z
	10	K09A K09B
	12	M09A M09B M37Z
	21B	X06A X06B X06C
	22	Y02A Y02B Y02C
86.41.12↔		BORP MBOR VAC
		VAC I VAC II VBOR
	01	B17A B17B
	02	C14Z
	03	D08Z D12A D22Z
		D25A D25B D30A
		D30B D30C
	04	E36A E36B
	05	F04Z F13A F13B
		F21A F21B F21C
	06	G12A G16A G38A
		G38B
	08	I28A I28B I28C
	09	J02A J02B J03A
		J03B J04Z J08Z
		J11A J11B J21Z
	10	K09A K09B
	12	M09A M09B M37Z
	21B	X06A X06B X06C
	22	Y02A Y02B Y02C
86.41.13↔		BORP MBOR VAC
		VAC I VAC II VBOR
	01	B17A B17B
	02	C14Z
	03	D12A
	04	E36A E36B
	05	F04Z F13A F13B
		F21A F21B F21C
	06	G12A G16A G38A
		G38B
	08	I28A I28B I28C
	09	J02A J02B J03A
		J03B J04Z J08Z
		J11A J11B J21Z
	10	K09A K09B
	12	M09A M09B M37Z
	21B	X06A X06B X06C
	22	Y02A Y02B Y02C
86.41.14↔		BORP MBOR VAC
		VAC I VAC II VBOR
	01	B17A B17B
	02	C14Z

CHOP	MDC	DRG
	03	D12A
	04	E36A E36B
	05	F04Z F13A F13B
		F21A F21B F21C
	06	G12A G16A G38A
		G38B
	08	I28A I28B I28C
	09	J02A J02B J03A
		J03B J04Z J08Z
		J11A J11B J21Z
	10	K09A K09B
	12	M09A M09B M37Z
	21B	X06A X06B X06C
	22	Y02A Y02B Y02C
86.41.15↔		BORP MBOR VAC
		VAC I VAC II VBOR
	01	B17A B17B
	02	C14Z
	03	D12A
	04	E36A E36B
	05	F04Z F13A F13B
		F21A F21B F21C
	06	G12A G16A G38A
		G38B
	08	I28A I28B I28C
	09	J02A J02B J03A
		J03B J04Z J08Z
		J11A J11B J21Z
	10	K09A K09B
	12	M09A M09B M37Z
	21B	X06A X06B X06C
	22	Y02A Y02B Y02C
86.41.16↔		BORP MBOR VAC
		VAC I VAC II VBOR
	01	B17A B17B
	02	C14Z
	03	D12A
	04	E36A E36B
	05	F04Z F13A F13B
		F21A F21B F21C
	06	G12A G16A G38A
		G38B
	08	I28A I28B I28C
	09	J02A J02B J03A
		J03B J04Z J08Z
		J11A J11B J21Z
	10	K09A K09B
	12	M09A M09B M37Z
	21B	X06A X06B X06C
	22	Y02A Y02B Y02C
86.41.17↔		BORP MBOR VAC
		VAC I VAC II VBOR
	01	B17A B17B
	02	C14Z
	03	D12A
	04	E36A E36B
	05	F04Z F13A F13B
		F21A F21B F21C
	06	G12A G16A G38A
		G38B
	08	I28A I28B I28C
	09	J02A J02B J03A
		J03B J04Z J08Z
		J11A J11B J21Z
	10	K09A K09B
	12	M09A M09B M37Z
	21B	X06A X06B X06C
	22	Y02A Y02B Y02C
86.41.18↔		BORP MBOR VAC
		VAC I VAC II VBOR
	01	B17A B17B
	02	C14Z
	03	D12A
	04	E36A E36B
	05	F04Z F13A F13B
		F21A F21B F21C
	06	G12A G16A G38A
		G38B
	08	I28A I28B I28C
	09	J02A J02B J03A
		J03B J04Z J08Z
		J11A J11B J21Z
	10	K09A K09B
	12	M09A M09B M37Z
	21B	X06A X06B X06C
	22	Y02A Y02B Y02C
86.41.1A↔		BORP MBOR VAC
		VAC I VAC II VBOR
	01	B17A B17B
	02	C14Z
	03	D12A
	04	E36A E36B
	05	F04Z F13A F13B
		F21A F21B F21C
	06	G12A G16A G38A
		G38B
	08	I28A I28B I28C
	09	J02A J02B J03A
		J03B J04Z J08Z
		J11A J11B J21Z
	10	K09A K09B
	12	M09A M09B M37Z
	21B	X06A X06B X06C
	22	Y02A Y02B Y02C
86.41.1B↔		BORP MBOR VAC
		VAC I VAC II VBOR
	01	B17A B17B
	02	C14Z
	03	D12A
	04	E36A E36B
	05	F04Z F13A F13B
		F21A F21B F21C
	06	G12A G16A G38A
		G38B
	08	I28A I28B I28C
	09	J02A J02B J03A
		J03B J04Z J08Z
		J11A J11B J21Z
	10	K09A K09B
	12	M09A M09B M37Z
	21B	X06A X06B X06C
	22	Y02A Y02B Y02C
86.41.1C↔		BORP MBOR VAC
		VAC I VAC II VBOR
	01	B17A B17B
	02	C14Z
	03	D12A
	04	E36A E36B
	05	F04Z F13A F13B
		F21A F21B F21C
	06	G12A G16A G38A
		G38B
	08	I28A I28B I28C
	09	J02A J02B J03A
		J03B J04Z J08Z
		J11A J11B J21Z
	10	K09A K09B
	12	M09A M09B M37Z
	21B	X06A X06B X06C
	22	Y02A Y02B Y02C
86.41.1D↔		BORP MBOR VAC
		VAC I VAC II VBOR
	01	B17A B17B
	02	C14Z
	03	D12A
	04	E36A E36B
	05	F04Z F13A F13B
		F21A F21B F21C
	06	G12A G16A G38A
		G38B
	08	I28A I28B I28C
	09	J02A J02B J03A
		J03B J04Z J08Z
		J11A J11B J21Z
	10	K09A K09B
	12	M09A M09B M37Z
	21B	X06A X06B X06C
	22	Y02A Y02B Y02C
86.42.11↔		BORP MBOR VAC
		VAC I VAC II VBOR
	01	B17A B17B
	02	C14Z
	03	D08Z D12A D22Z
		D25A D25B D30A
		D30B D30C
	04	E36A E36B
	05	F04Z F13A F13B
		F21A F21B F21C
	06	G12A G16A G38A
		G38B
	08	I28A I28B I28C
	09	J02A J02B J03A
		J03B J04Z J08Z
		J11A J11B J21Z
	10	K09A K09B
	12	M09A M09B M37Z
	21B	X06A X06B X06C
	22	Y02A Y02B Y02C
86.42.12↔		BORP MBOR VAC
		VAC I VAC II VBOR
	01	B17A B17B
	02	C14Z
	03	D08Z D12A D22Z
		D25A D25B D30A
		D30B D30C
	04	E36A E36B
	05	F04Z F13A F13B
		F21A F21B F21C
	06	G12A G16A G38A
		G38B
	08	I28A I28B I28C
	09	J02A J02B J03A
		J03B J04Z J08Z
		J11A J11B J21Z
	10	K09A K09B
	12	M09A M09B M37Z
	21B	X06A X06B X06C
	22	Y02A Y02B Y02C
86.42.13↔		BORP MBOR VAC
		VAC I VAC II VBOR
	01	B17A B17B
	02	C14Z
	03	D12A
	04	E36A E36B
	05	F04Z F13A F13B
		F21A F21B F21C
	06	G12A G16A G38A
		G38B
	08	I28A I28B I28C
	09	J02A J02B J03A

PROC

PROC

CHOP	MDC	DRG
		J03B J04Z J08Z
		J11A J11B J21Z
	10	K09A K09B
	12	M09A M09B M37Z
	21B	X06A X06B X06C
	22	Y02A Y02B Y02C
86.42.14↔		BORP MBOR VAC
		VAC I VAC II VBOR
	01	B17A B17B
	02	C14Z
	03	D12A
	04	E36A E36B
	05	F04Z F13A F13B
		F21A F21B F21C
	06	G12A G16A G38A
		G38B
	08	I28A I28B I28C
	09	J02A J02B J03A
		J03B J04Z J08Z
		J11A J11B J21Z
	10	K09A K09B
	12	M09A M09B M37Z
	21B	X06A X06B X06C
	22	Y02A Y02B Y02C
86.42.15↔		BORP MBOR VAC
		VAC I VAC II VBOR
	01	B17A B17B
	02	C14Z
	03	D12A
	04	E36A E36B
	05	F04Z F13A F13B
		F21A F21B F21C
	06	G12A G16A G38A
		G38B
	08	I28A I28B I28C
	09	J02A J02B J03A
		J03B J04Z J08Z
		J11A J11B J21Z
	10	K09A K09B
	12	M09A M09B M37Z
	21B	X06A X06B X06C
	22	Y02A Y02B Y02C
86.42.16↔		BORP MBOR VAC
		VAC I VAC II VBOR
	01	B17A B17B
	02	C14Z
	03	D12A
	04	E36A E36B
	05	F04Z F13A F13B
		F21A F21B F21C
	06	G12A G16A G38A
		G38B
	08	I28A I28B I28C
	09	J02A J02B J03A
		J03B J04Z J08Z
		J11A J11B J21Z
	10	K09A K09B
	12	M09A M09B M37Z
	21B	X06A X06B X06C
	22	Y02A Y02B Y02C
86.42.17↔		BORP MBOR VAC
		VAC I VAC II VBOR
	01	B17A B17B
	02	C14Z
	03	D12A
	04	E02A E02B E02C
		E36A E36B
	05	F04Z F13A F13B
		F21A F21B F21C
	06	G12A G16A G38A
		G38B
	08	I28A I28B I28C
	09	J02A J02B J03A
		J03B J04Z J08Z
		J11A J11B J21Z
	10	K09A K09B
	12	M09A M09B M37Z
	21B	X06A X06B X06C
	22	Y02A Y02B Y02C
86.42.18↔		BORP MBOR VAC
		VAC I VAC II VBOR
	01	B17A B17B
	02	C14Z
	03	D12A
	04	E36A E36B
	05	F04Z F13A F13B
		F21A F21B F21C
	06	G12A G16A G38A
		G38B
	08	I28A I28B I28C
	09	J02A J02B J03A
		J03B J04Z J08Z
		J11A J11B J21Z
	10	K09A K09B
	12	M09A M09B M37Z
	21B	X06A X06B X06C
	22	Y02A Y02B Y02C
86.42.1A↔		BORP MBOR VAC
		VAC I VAC II VBOR
	01	B17A B17B
	02	C14Z
	03	D12A
	04	E36A E36B
	05	F04Z F13A F13B
		F21A F21B F21C
	06	G12A G16A G38A
		G38B
	08	I28A I28B I28C
	09	J02A J02B J03A
		J03B J04Z J08Z
		J11A J11B J21Z
	10	K09A K09B
	12	M09A M09B M37Z
	21B	X06A X06B X06C
	22	Y02A Y02B Y02C
86.42.1B↔		BORP MBOR VAC
		VAC I VAC II VBOR
	01	B17A B17B
	02	C14Z
	03	D12A
	04	E36A E36B
	05	F04Z F13A F13B
		F21A F21B F21C
	06	G12A G16A G38A
		G38B
	08	I28A I28B I28C
	09	J02A J02B J03A
		J03B J04Z J08Z
		J11A J11B J21Z
	10	K09A K09B
	12	M09A M09B M37Z
	21B	X06A X06B X06C
	22	Y02A Y02B Y02C
86.42.1C↔		BORP MBOR VAC
		VAC I VAC II VBOR
	01	B17A B17B
	02	C14Z
	03	D12A
	04	E36A E36B
	05	F04Z F13A F13B
		F21A F21B F21C
	06	G12A G16A G38A
		G38B
	08	I28A I28B I28C
	09	J02A J02B J03A
		J03B J04Z J08Z
		J11A J11B J21Z
	10	K09A K09B
	12	M09A M09B M37Z
	21B	X06A X06B X06C
	22	Y02A Y02B Y02C
86.42.1D↔		BORP MBOR VAC
		VAC I VAC II VBOR
	01	B17A B17B
	02	C14Z
	03	D12A
	04	E36A E36B
	05	F04Z F13A F13B
		F21A F21B F21C
	06	G12A G16A G38A
		G38B
	08	I28A I28B I28C
	09	J02A J02B J03A
		J03B J04Z J08Z
		J11A J11B J21Z
	10	K09A K09B
	12	M09A M09B M37Z
	21B	X06A X06B X06C
	22	Y02A Y02B Y02C
86.43.11↔		BORP MBOR VAC
		VAC I VAC II VBOR
	01	B17A B17B
	02	C14Z
	03	D08Z D12A D22Z
		D25A D25B D30A
		D30B D30C
	04	E36A E36B
	05	F04Z F13A F13B
		F21A F21B F21C
	06	G12A G16A G38A
		G38B
	08	I28A I28B I28C
	09	J02A J02B J03A
		J03B J04Z J08Z
		J11A J11B J21Z
	10	K09A K09B
	12	M09A M09B M37Z
	21B	X06A X06B X06C
	22	Y02A Y02B Y02C
86.43.12↔		BORP MBOR VAC
		VAC I VAC II VBOR
	01	B17A B17B
	02	C14Z
	03	D08Z D12A D22Z
		D25A D25B D30A
		D30B D30C
	04	E36A E36B
	05	F04Z F13A F13B
		F21A F21B F21C
	06	G12A G16A G38A
		G38B
	08	I28A I28B I28C
	09	J02A J02B J03A
		J03B J04Z J08Z
		J11A J11B J21Z
	10	K09A K09B
	12	M09A M09B M37Z
	21B	X06A X06B X06C
	22	Y02A Y02B Y02C
86.43.13↔		BORP MBOR VAC

CHOP	MDC	DRG
		VAC I VAC II VBOR
	01	B17A B17B
	02	C14Z
	03	D12A
	04	E36A E36B
	05	F04Z F13A F13B
		F21A F21B F21C
	06	G12A G16A G38A
		G38B
	08	I28A I28B I28C
	09	J02A J02B J03A
		J03B J04Z J08Z
		J11A J11B J21Z
	10	K09A K09B
	12	M09A M09B M37Z
	21B	X06A X06B X06C
	22	Y02A Y02B Y02C
86.43.14↔		BORP MBOR VAC
		VAC I VAC II VBOR
	01	B17A B17B
	02	C14Z
	03	D12A
	04	E36A E36B
	05	F04Z F13A F13B
		F21A F21B F21C
	06	G12A G16A G38A
		G38B
	08	I28A I28B I28C
	09	J02A J02B J03A
		J03B J04Z J08Z
		J11A J11B J21Z
	10	K09A K09B
	12	M09A M09B M37Z
	21B	X06A X06B X06C
	22	Y02A Y02B Y02C
86.43.15↔		BORP MBOR VAC
		VAC I VAC II VBOR
	01	B17A B17B
	02	C14Z
	03	D12A
	04	E36A E36B
	05	F04Z F13A F13B
		F21A F21B F21C
	06	G12A G16A G38A
		G38B
	08	I28A I28B I28C
	09	J02A J02B J03A
		J03B J04Z J08Z
		J11A J11B J21Z
	10	K09A K09B
	12	M09A M09B M37Z
	21B	X06A X06B X06C
	22	Y02A Y02B Y02C
86.43.16↔		BORP MBOR VAC
		VAC I VAC II VBOR
	01	B17A B17B
	02	C14Z
	03	D12A
	04	E36A E36B
	05	F04Z F13A F13B
		F21A F21B F21C
	06	G12A G16A G38A
		G38B
	08	I28A I28B I28C
	09	J02A J02B J03A
		J03B J04Z J08Z
		J11A J11B J21Z
	10	K09A K09B
	12	M09A M09B M37Z
	21B	X06A X06B X06C
	22	Y02A Y02B Y02C
86.43.17↔		BORP MBOR VAC
		VAC I VAC II VBOR
	01	B17A B17B
	02	C14Z
	03	D12A
	04	E36A E36B
	05	F04Z F13A F13B
		F21A F21B F21C
	06	G12A G16A G38A
		G38B
	08	I28A I28B I28C
	09	J02A J02B J03A
		J03B J04Z J08Z
		J11A J11B J21Z
	10	K09A K09B
	12	M09A M09B M37Z
	21B	X06A X06B X06C
	22	Y02A Y02B Y02C
86.43.18↔		BORP MBOR VAC
		VAC I VAC II VBOR
	01	B17A B17B
	02	C14Z
	03	D12A
	04	E36A E36B
	05	F04Z F13A F13B
		F21A F21B F21C
	06	G12A G16A G38A
		G38B
	08	I28A I28B I28C
	09	J02A J02B J03A
		J03B J04Z J08Z
		J11A J11B J21Z
	10	K09A K09B
	12	M09A M09B M37Z
	21B	X06A X06B X06C
	22	Y02A Y02B Y02C
86.43.1A↔		BORP MBOR VAC
		VAC I VAC II VBOR
	01	B17A B17B
	02	C14Z
	03	D12A
	04	E36A E36B
	05	F04Z F13A F13B
		F21A F21B F21C
	06	G12A G16A G38A
		G38B
	08	I28A I28B I28C
	09	J02A J02B J03A
		J03B J04Z J08Z
		J11A J11B J21Z
	10	K09A K09B
	12	M09A M09B M37Z
	21B	X06A X06B X06C
	22	Y02A Y02B Y02C
86.43.1B↔		BORP MBOR VAC
		VAC I VAC II VBOR
	01	B17A B17B
	02	C14Z
	03	D12A
	04	E36A E36B
	05	F04Z F13A F13B
		F21A F21B F21C
	06	G12A G16A G38A
		G38B
	08	I28A I28B I28C
	09	J02A J02B J03A
		J03B J04Z J08Z
		J11A J11B J21Z
	10	K09A K09B
	12	M09A M09B M37Z
	21B	X06A X06B X06C
	22	Y02A Y02B Y02C
86.43.1C↔		BORP MBOR VAC
		VAC I VAC II VBOR
	01	B17A B17B
	02	C14Z
	03	D12A
	04	E36A E36B
	05	F04Z F13A F13B
		F21A F21B F21C
	06	G12A G16A G38A
		G38B
	08	I28A I28B I28C
	09	J02A J02B J03A
		J03B J04Z J08Z
		J11A J11B J21Z
	10	K09A K09B
	12	M09A M09B M37Z
	21B	X06A X06B X06C
	22	Y02A Y02B Y02C
86.43.1D↔		BORP MBOR VAC
		VAC I VAC II VBOR
	01	B17A B17B
	02	C14Z
	03	D12A
	04	E36A E36B
	05	F04Z F13A F13B
		F21A F21B F21C
	06	G12A G16A G38A
		G38B
	08	I28A I28B I28C
	09	J02A J02B J03A
		J03B J04Z J08Z
		J11A J11B J21Z
	10	K09A K09B
	12	M09A M09B M37Z
	21B	X06A X06B X06C
	22	Y02A Y02B Y02C
86.53.11‡↔	01	B60A
	05	F04Z F13A F13B
86.53.16‡↔	01	B60A
	05	F04Z F13A F13B
86.53.1D‡↔	01	B60A
	05	F04Z F13A F13B
86.53.1E‡↔	01	B60A
	05	F04Z F13A F13B
86.69↔		VB
	05	F21A F21B F21C
	08	I28A I28B I28C
	09	J01A J01B J23A
		J23B J24A J24B
		J25Z
	12	M09A M09B M37Z
	21B	X06A X06B X06C
	22	Y02A Y02B Y02C
86.6A.11↔		BORP MBOR VAC
		VAC I VAC II VB
		VBOR
	01	B17A B17B
	04	E36A E36B
	05	F04Z F13A F13B
		F21A F21B F21C
		F28A
	06	G12A G16A G38A
		G38B
	08	I02A I02B I02C
		I12A I12B I12C
		I22Z I28A I28B
		I28C I32C I50Z

PROC

PROC

CHOP	MDC	DRG
	09	J02A J02B J04Z J08Z J21Z J22Z
	12	M09A M09B M37Z
	21B	X01A X01B X06A X06B X06C X07A X07B
	22	Y02A Y02B Y02C
	Prä	B61B B61C B61D
86.6A.12↔		BORP MBOR VAC VAC I VAC II VB VBOR
	01	B17A B17B
	04	E36A E36B
	05	F04Z F13A F13B F21A F21B F21C F28A
	06	G12A G16A G38A G38B
	08	I02A I02B I02C I12A I12B I12C I22Z I28A I28B I28C I32C I50Z
	09	J02A J02B J04Z J08Z J21Z J22Z
	12	M09A M09B M37Z
	21B	X01A X01B X06A X06B X06C X07A X07B
	22	Y02A Y02B Y02C
	Prä	B61B B61C B61D
86.6A.13↔		BORP MBOR VAC VAC I VAC II VB VBOR
	01	B17A B17B
	04	E36A E36B
	05	F04Z F13A F13B F21A F21B F21C F28A
	06	G12A G16A G38A G38B
	08	I02A I02B I02C I12A I12B I12C I22Z I28A I28B I28C I32C I50Z
	09	J02A J02B J04Z J08Z J21Z J22Z
	12	M09A M09B M37Z
	21B	X01A X01B X06A X06B X06C X07A X07B
	22	Y02A Y02B Y02C
	Prä	B61B B61C B61D
86.6A.14↔		BORP MBOR VAC VAC I VAC II VB VBOR
	01	B17A B17B
	04	E36A E36B
	05	F04Z F13A F13B F21A F21B F21C F28A
	06	G12A G16A G38A G38B
	08	I02A I02B I02C I12A I12B I12C I22Z I28A I28B I28C I32C I50Z
	09	J02A J02B J04Z J08Z J21Z J22Z
	12	M09A M09B M37Z
	21B	X01A X01B X06A X06B X06C X07A X07B
	22	Y02A Y02B Y02C
	Prä	B61B B61C B61D
86.6A.15↔		BORP MBOR VAC VAC I VAC II VB VBOR
	01	B17A B17B
	04	E36A E36B
	05	F04Z F13A F13B F21A F21B F21C F28A
	06	G12A G16A G38A G38B
	08	I02A I02B I02C I12A I12B I12C I22Z I28A I28B I28C I32A I32B I32C I50Z
	09	J02A J02B J04Z J08Z J21Z J22Z
	12	M09A M09B M37Z
	21B	X01A X01B X06A X06B X06C X07A X07B
	22	Y02A Y02B Y02C
	Prä	B61B B61C B61D
86.6A.16↔		BORP MBOR VAC VAC I VAC II VB VBOR
	01	B17A B17B
	04	E36A E36B
	05	F04Z F13A F13B F21A F21B F21C
	06	G12A G16A G38A G38B
	08	I02A I02B I02C I12A I12B I12C I28A I28B I28C I32A I32B I32C I32D I32E I32F
	09	J02A J02B J03A J03B J04Z J08Z J21Z J22Z
	12	M09A M09B M37Z
	21B	X01A X01B X06A X06B X06C X07A X07B
	22	Y02A Y02B Y02C
	Prä	B61B B61C B61D
86.6A.17↔		BORP MBOR VAC VAC I VAC II VB VBOR
	01	B17A B17B
	04	E36A E36B
	05	F04Z F13A F13B F21A F21B F21C F28A
	06	G12A G16A G38A G38B
	08	I02A I02B I02C I12A I12B I12C I22Z I28A I28B I28C I32C I50Z
	09	J02A J02B J04Z J08Z J21Z J22Z
	12	M09A M09B M37Z
	21B	X01A X01B X06A X06B X06C X07A X07B
	22	Y02A Y02B Y02C
	Prä	B61B B61C B61D
86.6A.18↔		BORP MBOR VAC VAC I VAC II VB VBOR
	01	B17A B17B
	04	E36A E36B
	05	F04Z F13A F13B F21A F21B F21C F28A
	06	G12A G12B G16A G38A G38B
	08	I02A I02B I02C I12A I12B I12C I22Z I28A I28B I28C I32C I50Z
	09	J02A J02B J04Z J08Z J21Z J22Z
	12	M05Z M09A M09B M37Z
	13	N09Z
	21B	X01A X01B X06A X06B X06C X07A X07B
	22	Y02A Y02B Y02C
	Prä	B61B B61C B61D
86.6A.1A↔		BORP MBOR VAC VAC I VAC II VB VBOR
	01	B17A B17B
	04	E36A E36B
	05	F04Z F13A F13B F21A F21B F21C F28A
	06	G12A G12B G16A G38A G38B
	08	I02A I02B I02C I12A I12B I12C I22Z I28A I28B I28C I32C I50Z
	09	J02A J02B J04Z J08Z J21Z J22Z
	12	M05Z M09A M09B M37Z
	13	N09Z
	21B	X01A X01B X06A X06B X06C X07A X07B
	22	Y02A Y02B Y02C
	Prä	B61B B61C B61D
86.6A.1B↔		BORP MBOR VAC VAC I VAC II VB VBOR
	01	B17A B17B
	04	E36A E36B
	05	F04Z F13A F13B F21A F21B F21C F28A
	06	G12A G16A G38A G38B
	08	I02A I02B I02C I12A I12B I12C I22Z I28A I28B I28C I32C I50Z
	09	J02A J02B J04Z J08Z J21Z J22Z
	12	M09A M09B M37Z
	21B	X01A X01B X06A X06B X06C X07A X07B

CHOP	MDC	DRG
	22	Y02A Y02B Y02C
	Prä	B61B B61C B61D
86.6A.1C↔		BORP MBOR VAC
		VAC I VAC II VB
		VBOR
	01	B17A B17B
	04	E36A E36B
	05	F04Z F13A F13B
		F21A F21B F21C
		F28A
	06	G12A G16A G38A
		G38B
	08	I02A I02B I02C
		I12A I12B I12C
		I22Z I28A I28B
		I28C I32C I50Z
	09	J02A J02B J04Z
		J08Z J21Z J22Z
	12	M09A M09B M37Z
	21B	X01A X01B X06A
		X06B X06C X07A
		X07B
	22	Y02A Y02B Y02C
	Prä	B61B B61C B61D
86.6A.1D↔		BORP MBOR VAC
		VAC I VAC II VB
		VBOR
	01	B17A B17B
	04	E36A E36B
	05	F04Z F13A F13B
		F21A F21B F21C
		F28A
	06	G12A G16A G38A
		G38B
	08	I02A I02B I02C
		I12A I12B I12C
		I22Z I28A I28B
		I28C I32C I50Z
	09	J02A J02B J04Z
		J08Z J21Z J22Z
	12	M09A M09B M37Z
	21B	X01A X01B X06A
		X06B X06C X07A
		X07B
	22	Y02A Y02B Y02C
	Prä	B61B B61C B61D
86.6A.21↔		BORP MBOR VAC
		VAC I VAC II VB
		VBOR
	01	B17A B17B
	04	E36A E36B
	05	F04Z F13A F13B
		F21A F21B F21C
		F28A
	06	G12A G16A G38A
		G38B
	08	I02A I02B I02C
		I12A I12B I12C
		I22Z I28A I28B
		I28C I32C I50Z
	09	J02A J02B J04Z
		J08Z J21Z J22Z
	12	M09A M09B M37Z
	21B	X01A X01B X06A
		X06B X06C X07A
		X07B
	22	Y02A Y02B Y02C
	Prä	B61B B61C B61D
86.6A.22↔		BORP MBOR VAC
		VAC I VAC II VB

CHOP	MDC	DRG
		VBOR
	01	B17A B17B
	04	E36A E36B
	05	F04Z F13A F13B
		F21A F21B F21C
		F28A
	06	G12A G16A G38A
		G38B
	08	I02A I02B I02C
		I12A I12B I12C
		I22Z I28A I28B
		I28C I32C I50Z
	09	J02A J02B J04Z
		J08Z J21Z J22Z
	12	M09A M09B M37Z
	21B	X01A X01B X06A
		X06B X06C X07A
		X07B
	22	Y02A Y02B Y02C
	Prä	B61B B61C B61D
86.6A.23↔		BORP MBOR VAC
		VAC I VAC II VB
		VBOR
	01	B17A B17B
	04	E36A E36B
	05	F04Z F13A F13B
		F21A F21B F21C
		F28A
	06	G12A G16A G38A
		G38B
	08	I02A I02B I02C
		I12A I12B I12C
		I22Z I28A I28B
		I28C I32C I50Z
	09	J02A J02B J04Z
		J08Z J21Z J22Z
	12	M09A M09B M37Z
	21B	X01A X01B X06A
		X06B X06C X07A
		X07B
	22	Y02A Y02B Y02C
	Prä	B61B B61C B61D
86.6A.24↔		BORP MBOR VAC
		VAC I VAC II VB
		VBOR
	01	B17A B17B
	04	E36A E36B
	05	F04Z F13A F13B
		F21A F21B F21C
		F28A
	06	G12A G16A G38A
		G38B
	08	I02A I02B I02C
		I12A I12B I12C
		I22Z I28A I28B
		I28C I32C I50Z
	09	J02A J02B J04Z
		J08Z J21Z J22Z
	12	M09A M09B M37Z
	21B	X01A X01B X06A
		X06B X06C X07A
		X07B
	22	Y02A Y02B Y02C
	Prä	B61B B61C B61D
86.6A.25↔		BORP MBOR VAC
		VAC I VAC II VB
		VBOR
	01	B17A B17B
	04	E36A E36B
	05	F04Z F13A F13B

CHOP	MDC	DRG
		F21A F21B F21C
		F28A
	06	G12A G16A G38A
		G38B
	08	I02A I02B I02C
		I12A I12B I12C
		I22Z I28A I28B
		I28C I32A I32B
		I32C I50Z
	09	J02A J02B J04Z
		J08Z J21Z J22Z
	12	M09A M09B M37Z
	21B	X01A X01B X06A
		X06B X06C X07A
		X07B
	22	Y02A Y02B Y02C
	Prä	B61B B61C B61D
86.6A.26↔		BORP MBOR VAC
		VAC I VAC II VB
		VBOR
	01	B17A B17B
	04	E36A E36B
	05	F04Z F13A F13B
		F21A F21B F21C
	06	G12A G16A G38A
		G38B
	08	I02A I02B I02C
		I12A I12B I12C
		I28A I28B I28C
		I32A I32B I32C
		I32D I32E I32F
	09	J02A J02B J03A
		J03B J04Z J08Z
		J21Z J22Z
	12	M09A M09B M37Z
	21B	X01A X01B X06A
		X06B X06C X07A
		X07B
	22	Y02A Y02B Y02C
	Prä	B61B B61C B61D
86.6A.27↔		BORP MBOR VAC
		VAC I VAC II VB
		VBOR
	01	B17A B17B
	04	E36A E36B
	05	F04Z F13A F13B
		F21A F21B F21C
		F28A
	06	G12A G16A G38A
		G38B
	08	I02A I02B I02C
		I12A I12B I12C
		I22Z I28A I28B
		I28C I32C I50Z
	09	J02A J02B J04Z
		J08Z J21Z J22Z
	12	M09A M09B M37Z
	21B	X01A X01B X06A
		X06B X06C X07A
		X07B
	22	Y02A Y02B Y02C
	Prä	B61B B61C B61D
86.6A.28↔		BORP MBOR VAC
		VAC I VAC II VB
		VBOR
	01	B17A B17B
	04	E36A E36B
	05	F04Z F13A F13B
		F21A F21B F21C
		F28A

PROC

PROC

CHOP	MDC	DRG
	06	G12A G12B G16A G38A G38B
	08	I02A I02B I02C I12A I12B I12C I22Z I28A I28B I28C I32C I50Z
	09	J02A J02B J04Z J08Z J21Z J22Z
	12	M05Z M09A M09B M37Z
	13	N09Z
	21B	X01A X01B X06A X06B X06C X07A X07B
	22	Y02A Y02B Y02C
	Prä	B61B B61C B61D
86.6A.2A↔		BORP MBOR VAC VAC I VAC II VB VBOR
	01	B17A B17B
	04	E36A E36B
	05	F04Z F13A F13B F21A F21B F21C F28A
	06	G12A G12B G16A G38A G38B
	08	I02A I02B I02C I12A I12B I12C I22Z I28A I28B I28C I32C I50Z
	09	J02A J02B J04Z J08Z J21Z J22Z
	12	M05Z M09A M09B M37Z
	13	N09Z
	21B	X01A X01B X06A X06B X06C X07A X07B
	22	Y02A Y02B Y02C
	Prä	B61B B61C B61D
86.6A.2B↔		BORP MBOR VAC VAC I VAC II VB VBOR
	01	B17A B17B
	04	E36A E36B
	05	F04Z F13A F13B F21A F21B F21C F28A
	06	G12A G16A G38A G38B
	08	I02A I02B I02C I12A I12B I12C I22Z I28A I28B I28C I32C I50Z
	09	J02A J02B J04Z J08Z J21Z J22Z
	12	M09A M09B M37Z
	21B	X01A X01B X06A X06B X06C X07A X07B
	22	Y02A Y02B Y02C
	Prä	B61B B61C B61D
86.6A.2C↔		BORP MBOR VAC VAC I VAC II VB VBOR
	01	B17A B17B
	04	E36A E36B
	05	F04Z F13A F13B F21A F21B F21C F28A
	06	G12A G16A G38A G38B
	08	I02A I02B I02C I12A I12B I12C I22Z I28A I28B I28C I32C I50Z
	09	J02A J02B J04Z J08Z J21Z J22Z
	12	M09A M09B M37Z
	21B	X01A X01B X06A X06B X06C X07A X07B
	22	Y02A Y02B Y02C
	Prä	B61B B61C B61D
86.6A.2D↔		BORP MBOR VAC VAC I VAC II VB VBOR
	01	B17A B17B
	04	E36A E36B
	05	F04Z F13A F13B F21A F21B F21C F28A
	06	G12A G16A G38A G38B
	08	I02A I02B I02C I12A I12B I12C I22Z I28A I28B I28C I32C I50Z
	09	J02A J02B J04Z J08Z J21Z J22Z
	12	M09A M09B M37Z
	21B	X01A X01B X06A X06B X06C X07A X07B
	22	Y02A Y02B Y02C
	Prä	B61B B61C B61D
86.6B.11↔		BORP MBOR VAC VB VBOR
	01	B17A
	03	D08Z D22Z D25A D25B D30A D30B D30C
	04	E36A E36B
	05	F04Z F13A F13B F21A F21B F21C
	06	G12A G12B G16A G38A G38B
	07	H06Z
	08	I28A I28B I28C
	09	J02A J02B J03A J03B J04Z J08Z J10A J10B J21Z J22Z
	12	M09A M09B M37Z
	21B	X06A X06B X06C
	22	Y02A Y02B Y02C
86.6B.12↔		BORP MBOR VAC VB VBOR
	01	B17A
	03	D08Z D22Z D25A D25B D30A D30B D30C
	04	E36A E36B
	05	F04Z F13A F13B F21A F21B F21C
	06	G12A G12B G16A G38A G38B
	07	H06Z
	08	I28A I28B I28C
	09	J02A J02B J03A J03B J04Z J08Z J10A J10B J21Z J22Z
	12	M09A M09B M37Z
	21B	X06A X06B X06C
	22	Y02A Y02B Y02C
86.6B.13↔		BORP MBOR VAC VB VBOR
	01	B17A
	04	E36A E36B
	05	F04Z F13A F13B F21A F21B F21C
	06	G12A G12B G16A G38A G38B
	07	H06Z
	08	I28A I28B I28C
	09	J02A J02B J03A J03B J04Z J08Z J10A J10B J21Z J22Z
	12	M09A M09B M37Z
	21B	X06A X06B X06C
	22	Y02A Y02B Y02C
86.6B.14↔		BORP MBOR VAC VB VBOR
	01	B17A
	04	E36A E36B
	05	F04Z F13A F13B F21A F21B F21C
	06	G12A G12B G16A G38A G38B
	07	H06Z
	08	I28A I28B I28C
	09	J02A J02B J03A J03B J04Z J08Z J10A J10B J21Z J22Z
	12	M09A M09B M37Z
	21B	X06A X06B X06C
	22	Y02A Y02B Y02C
86.6B.15↔		BORP MBOR VAC VB VBOR
	01	B17A
	04	E36A E36B
	05	F04Z F13A F13B F21A F21B F21C
	06	G12A G12B G16A G38A G38B
	07	H06Z
	08	I28A I28B I28C
	09	J02A J02B J03A J03B J04Z J08Z J10A J10B J21Z J22Z
	12	M09A M09B M37Z
	21B	X06A X06B X06C
	22	Y02A Y02B Y02C
86.6B.16↔		BORP MBOR VAC VAC I VAC II VB VBOR
	01	B17A B17B
	04	E36A E36B
	05	F04Z F13A F13B F21A F21B F21C F28A
	06	G12A G16A G38A G38B
	08	I02A I02B I02C I12A I12B I12C I28A I28B I28C

CHOP	MDC	DRG
		I32A I32B I32C
		I32D I32E I32F
	09	J02A J02B J03A
		J03B J04Z J08Z
		J21Z J22Z
	12	M09A M09B M37Z
	21B	X06A X06B X06C
	22	Y02A Y02B Y02C
	Prä	B61B B61C B61D
86.6B.17↔		BORP MBOR VAC
		VB VBOR
	01	B17A
	04	E36A E36B
	05	F04Z F13A F13B
		F21A F21B F21C
	06	G12A G12B G16A
		G38A G38B
	07	H06Z
	08	I28A I28B I28C
	09	J02A J02B J03A
		J03B J04Z J08Z
		J10A J10B J21Z
		J22Z
	12	M09A M09B M37Z
	21B	X06A X06B X06C
	22	Y02A Y02B Y02C
86.6B.18↔		BORP MBOR VAC
		VB VBOR
	01	B17A
	04	E36A E36B
	05	F04Z F13A F13B
		F21A F21B F21C
	06	G12A G12B G16A
		G38A G38B
	07	H06Z
	08	I28A I28B I28C
	09	J02A J02B J03A
		J03B J04Z J08Z
		J10A J10B J21Z
		J22Z
	12	M09A M09B M37Z
	21B	X06A X06B X06C
	22	Y02A Y02B Y02C
86.6B.1A↔		BORP MBOR VAC
		VB VBOR
	01	B17A
	04	E36A E36B
	05	F04Z F13A F13B
		F21A F21B F21C
	06	G12A G12B G16A
		G38A G38B
	07	H06Z
	08	I28A I28B I28C
	09	J02A J02B J03A
		J03B J04Z J08Z
		J10A J10B J21Z
		J22Z
	12	M09A M09B M37Z
	21B	X06A X06B X06C
	22	Y02A Y02B Y02C
86.6B.1B↔		BORP MBOR VAC
		VB VBOR
	01	B17A
	04	E36A E36B
	05	F04Z F13A F13B
		F21A F21B F21C
	06	G12A G12B G16A
		G38A G38B
	07	H06Z
	08	I28A I28B I28C
	09	J02A J02B J03A
		J03B J04Z J08Z
		J10A J10B J21Z
		J22Z
	12	M09A M09B M37Z
	21B	X06A X06B X06C
	22	Y02A Y02B Y02C
86.6B.1C↔		BORP MBOR VAC
		VB VBOR
	01	B17A
	04	E36A E36B
	05	F04Z F13A F13B
		F21A F21B F21C
	06	G12A G12B G16A
		G38A G38B
	07	H06Z
	08	I28A I28B I28C
	09	J02A J02B J03A
		J03B J04Z J08Z
		J10A J10B J21Z
		J22Z
	12	M09A M09B M37Z
	21B	X06A X06B X06C
	22	Y02A Y02B Y02C
86.6B.1D↔		BORP MBOR VAC
		VB VBOR
	01	B17A
	04	E36A E36B
	05	F04Z F13A F13B
		F21A F21B F21C
	06	G12A G12B G16A
		G38A G38B
	07	H06Z
	08	I28A I28B I28C
	09	J02A J02B J03A
		J03B J04Z J08Z
		J10A J10B J21Z
		J22Z
	12	M09A M09B M37Z
	21B	X06A X06B X06C
	22	Y02A Y02B Y02C
86.6B.21↔		BORP MBOR VAC
		VAC I VAC II VB
		VBOR
	01	B17A
	03	D08Z D22Z D25A
		D25B D30A D30B
		D30C
	04	E36A E36B
	05	F04Z F13A F13B
		F21A F21B F21C
	06	G12A G12B G16A
		G38A G38B
	07	H06Z
	08	I28A I28B
	09	J02A J02B J03A
		J03B J04Z J08Z
		J10A J10B J21Z
		J22Z
	12	M09A M09B M37Z
	21B	X06A X06B X06C
	22	Y02A Y02B
86.6B.22↔		BORP MBOR VAC
		VAC I VAC II VB
		VBOR
	01	B17A
	03	D08Z D22Z D25A
		D25B D30A D30B
		D30C
	04	E36A E36B
	05	F04Z F13A F13B
		F21A F21B F21C
	06	G12A G12B G16A
		G38A G38B
	07	H06Z
	08	I28A I28B
	09	J02A J02B J03A
		J03B J04Z J08Z
		J10A J10B J21Z
		J22Z
	12	M09A M09B M37Z
	21B	X06A X06B X06C
	22	Y02A Y02B
86.6B.23↔		BORP MBOR VAC
		VAC I VAC II VB
		VBOR
	01	B17A
	04	E36A E36B
	05	F04Z F13A F13B
		F21A F21B F21C
	06	G12A G12B G16A
		G38A G38B
	07	H06Z
	08	I28A I28B
	09	J02A J02B J03A
		J03B J04Z J08Z
		J10A J10B J21Z
		J22Z
	12	M09A M09B M37Z
	21B	X06A X06B X06C
	22	Y02A Y02B
86.6B.24↔		BORP MBOR VAC
		VAC I VAC II VB
		VBOR
	01	B17A
	04	E36A E36B
	05	F04Z F13A F13B
		F21A F21B F21C
	06	G12A G12B G16A
		G38A G38B
	07	H06Z
	08	I28A I28B
	09	J02A J02B J03A
		J03B J04Z J08Z
		J10A J10B J21Z
		J22Z
	12	M09A M09B M37Z
	21B	X06A X06B X06C
	22	Y02A Y02B
86.6B.25↔		BORP MBOR VAC
		VAC I VAC II VB
		VBOR
	01	B17A
	04	E36A E36B
	05	F04Z F13A F13B
		F21A F21B F21C
	06	G12A G12B G16A
		G38A G38B
	07	H06Z
	08	I28A I28B
	09	J02A J02B J03A
		J03B J04Z J08Z
		J10A J10B J21Z
		J22Z
	12	M09A M09B M37Z
	21B	X06A X06B X06C
	22	Y02A Y02B
86.6B.26↔		BORP MBOR VAC
		VAC I VAC II VB
		VBOR

PROC

PROC

CHOP	MDC	DRG
	01	B17A B17B
	04	E36A E36B
	05	F04Z F13A F13B
		F21A F21B F21C
		F28A
	06	G12A G16A G38A
		G38B
	08	I02A I02B I02C
		I12A I12B I12C
		I28A I28B I28C
		I32A I32B I32C
		I32D I32E I32F
	09	J02A J02B J03A
		J03B J04Z J08Z
		J21Z J22Z
	12	M09A M09B M37Z
	21B	X01A X01B X06A
		X06B X06C X07A
		X07B
	22	Y02A Y02B Y02C
	Prä	B61B B61C B61D
86.6B.27↔		BORP MBOR VAC
		VAC I VAC II VB
		VBOR
	01	B17A
	04	E36A E36B
	05	F04Z F13A F13B
		F21A F21B F21C
	06	G12A G12B G16A
		G38A G38B
	07	H06Z
	08	I28A I28B
	09	J02A J02B J03A
		J03B J04Z J08Z
		J10A J10B J21Z
		J22Z
	12	M09A M09B M37Z
	21B	X06A X06B X06C
	22	Y02A Y02B
86.6B.28↔		BORP MBOR VAC
		VAC I VAC II VB
		VBOR
	01	B17A
	04	E36A E36B
	05	F04Z F13A F13B
		F21A F21B F21C
	06	G12A G12B G16A
		G38A G38B
	07	H06Z
	08	I28A I28B
	09	J02A J02B J03A
		J03B J04Z J08Z
		J10A J10B J21Z
		J22Z
	12	M05Z M09A M09B
		M37Z
	13	N09Z
	21B	X06A X06B X06C
	22	Y02A Y02B
86.6B.2A↔		BORP MBOR VAC
		VAC I VAC II VB
		VBOR
	01	B17A
	04	E36A E36B
	05	F04Z F13A F13B
		F21A F21B F21C
	06	G12A G12B G16A
		G38A G38B
	07	H06Z
	08	I28A I28B

CHOP	MDC	DRG
	09	J02A J02B J03A
		J03B J04Z J08Z
		J10A J10B J21Z
		J22Z
	12	M05Z M09A M09B
		M37Z
	13	N09Z
	21B	X06A X06B X06C
	22	Y02A Y02B
86.6B.2B↔		BORP MBOR VAC
		VAC I VAC II VB
		VBOR
	01	B17A
	04	E36A E36B
	05	F04Z F13A F13B
		F21A F21B F21C
	06	G12A G12B G16A
		G38A G38B
	07	H06Z
	08	I28A I28B
	09	J02A J02B J03A
		J03B J04Z J08Z
		J10A J10B J21Z
		J22Z
	12	M09A M09B M37Z
	21B	X06A X06B X06C
	22	Y02A Y02B
86.6B.2C↔		BORP MBOR VAC
		VAC I VAC II VB
		VBOR
	01	B17A
	04	E36A E36B
	05	F04Z F13A F13B
		F21A F21B F21C
	06	G12A G12B G16A
		G38A G38B
	07	H06Z
	08	I28A I28B
	09	J02A J02B J03A
		J03B J04Z J08Z
		J10A J10B J21Z
		J22Z
	12	M09A M09B M37Z
	21B	X06A X06B X06C
	22	Y02A Y02B
86.6B.2D↔		BORP MBOR VAC
		VAC I VAC II VB
		VBOR
	01	B17A
	04	E36A E36B
	05	F04Z F13A F13B
		F21A F21B F21C
	06	G12A G12B G16A
		G38A G38B
	07	H06Z
	08	I28A I28B
	09	J02A J02B J03A
		J03B J04Z J08Z
		J10A J10B J21Z
		J22Z
	12	M09A M09B M37Z
	21B	X06A X06B X06C
	22	Y02A Y02B
86.6C.11‡↔	01	B60A
	05	F21A F21B F21C
	15	P03A P03B P04A
		P04B P04C P05A
		P05B P05C P05D
		P61A
	21B	X06A X06B X06C

CHOP	MDC	DRG
	22	Y02A Y02B Y02C
86.6C.16‡↔	01	B60A
	05	F21A F21B F21C
	15	P03A P03B P04A
		P04B P04C P05A
		P05B P05C P05D
		P61A
	21B	X06A X06B X06C
	22	Y02A Y02B Y02C
86.6C.1D‡↔	01	B60A
	05	F21A F21B F21C
	15	P03A P03B P04A
		P04B P04C P05A
		P05B P05C P05D
		P61A
	21B	X06A X06B X06C
	22	Y02A Y02B Y02C
86.6C.1E‡↔	01	B60A
	05	F21A F21B F21C
	15	P03A P03B P04A
		P04B P04C P05A
		P05B P05C P05D
		P61A
	21B	X06A X06B X06C
	22	Y02A Y02B Y02C
86.6C.21‡↔	01	B60A
	05	F21A F21B F21C
	08	I28A
	09	J02A J02B J08Z
	15	P03A P03B P04A
		P04B P04C P05A
		P05B P05C P05D
		P61A
	21B	X06A X06B X06C
	22	Y02A Y02B Y02C
86.6C.26‡↔	01	B60A
	05	F21A F21B F21C
	08	I28A
	09	J02A J02B J08Z
	15	P03A P03B P04A
		P04B P04C P05A
		P05B P05C P05D
		P61A
	21B	X06A X06B X06C
	22	Y02A Y02B Y02C
86.6C.2D‡↔	01	B60A
	05	F21A F21B F21C
	08	I28A
	09	J02A J02B J08Z
	15	P03A P03B P04A
		P04B P04C P05A
		P05B P05C P05D
		P61A
	21B	X06A X06B X06C
	22	Y02A Y02B Y02C
86.6C.2E‡↔	01	B60A
	05	F21A F21B F21C
	08	I28A
	09	J02A J02B J08Z
	15	P03A P03B P04A
		P04B P04C P05A
		P05B P05C P05D
		P61A
	21B	X06A X06B X06C
	22	Y02A Y02B Y02C
86.6C.31‡↔	01	B60A
	05	F21A F21B F21C
	15	P03A P03B P04A
		P04B P04C P05A
		P05B P05C P05D

CHOP	MDC	DRG
		P61A
	21B	X06A X06B X06C
	22	Y02A Y02B Y02C
86.6C.36‡↔	01	B60A
	05	F21A F21B F21C
	15	P03A P03B P04A
		P04B P04C P05A
		P05B P05C P05D
		P61A
	21B	X06A X06B X06C
	22	Y02A Y02B Y02C
86.6C.3D‡↔	01	B60A
	05	F21A F21B F21C
	15	P03A P03B P04A
		P04B P04C P05A
		P05B P05C P05D
		P61A
	21B	X06A X06B X06C
	22	Y02A Y02B Y02C
86.6C.3E‡↔	01	B60A
	05	F21A F21B F21C
	15	P03A P03B P04A
		P04B P04C P05A
		P05B P05C P05D
		P61A
	21B	X06A X06B X06C
	22	Y02A Y02B Y02C
86.6C.41‡↔	01	B60A
	05	F21A F21B F21C
	08	I28A
	09	J02A J02B J08Z
	15	P03A P03B P04A
		P04B P04C P05A
		P05B P05C P05D
		P61A
	21B	X06A X06B X06C
	22	Y02A Y02B Y02C
86.6C.46‡↔	01	B60A
	05	F21A F21B F21C
	08	I28A
	09	J02A J02B J08Z
	15	P03A P03B P04A
		P04B P04C P05A
		P05B P05C P05D
		P61A
	21B	X06A X06B X06C
	22	Y02A Y02B Y02C
86.6C.4D‡↔	01	B60A
	05	F21A F21B F21C
	08	I28A
	09	J02A J02B J08Z
	15	P03A P03B P04A
		P04B P04C P05A
		P05B P05C P05D
		P61A
	21B	X06A X06B X06C
	22	Y02A Y02B Y02C
86.6C.4E‡↔	01	B60A
	05	F21A F21B F21C
	08	I28A
	09	J02A J02B J08Z
	15	P03A P03B P04A
		P04B P04C P05A
		P05B P05C P05D
		P61A
	21B	X06A X06B X06C
	22	Y02A Y02B Y02C
86.6C.51‡↔	01	B60A
	05	F21A F21B F21C
	15	P03A P03B P04A
		P04B P04C P05A
		P05B P05C P05D
		P61A
	21B	X06A X06B X06C
	22	Y02A Y02B Y02C
86.6C.56‡↔	01	B60A
	05	F21A F21B F21C
	15	P03A P03B P04A
		P04B P04C P05A
		P05B P05C P05D
		P61A
	21B	X06A X06B X06C
	22	Y02A Y02B Y02C
86.6C.5D‡↔	01	B60A
	05	F21A F21B F21C
	15	P03A P03B P04A
		P04B P04C P05A
		P05B P05C P05D
		P61A
	21B	X06A X06B X06C
	22	Y02A Y02B Y02C
86.6C.5E‡↔	01	B60A
	05	F21A F21B F21C
	15	P03A P03B P04A
		P04B P04C P05A
		P05B P05C P05D
		P61A
	21B	X06A X06B X06C
	22	Y02A Y02B Y02C
86.6C.61‡↔	01	B60A
	05	F21A F21B F21C
	08	I28A
	09	J02A J02B J08Z
	15	P03A P03B P04A
		P04B P04C P05A
		P05B P05C P05D
		P61A
	21B	X06A X06B X06C
	22	Y02A Y02B Y02C
86.6C.66‡↔	01	B60A
	05	F21A F21B F21C
	08	I28A
	09	J02A J02B J08Z
	15	P03A P03B P04A
		P04B P04C P05A
		P05B P05C P05D
		P61A
	21B	X06A X06B X06C
	22	Y02A Y02B Y02C
86.6C.6D‡↔	01	B60A
	05	F21A F21B F21C
	08	I28A
	09	J02A J02B J08Z
	15	P03A P03B P04A
		P04B P04C P05A
		P05B P05C P05D
		P61A
	21B	X06A X06B X06C
	22	Y02A Y02B Y02C
86.6C.6E‡↔	01	B60A
	05	F21A F21B F21C
	08	I28A
	09	J02A J02B J08Z
	15	P03A P03B P04A
		P04B P04C P05A
		P05B P05C P05D
		P61A
	21B	X06A X06B X06C
	22	Y02A Y02B Y02C
86.6D.11↔		BORP MBOR VAC
		VBOR
	04	E36A E36B
	05	F04Z F13A F13B
	06	G12A G16A G38A
		G38B
	08	I28A I28B I28C
		I32C
	09	J02A J02B J04Z
		J08Z J21Z J22Z
	12	M09A M09B M37Z
	21B	X01A X01B X07A
		X07B
	22	Y02A Y02B Y02C
86.6D.16↔		BORP MBOR VAC
		VBOR
	04	E36A E36B
	05	F04Z F13A F13B
	06	G12A G16A G38A
		G38B
	08	I02A I02B I02C
		I28A I28B I28C
		I32A I32B I32C
		I32D I32E I32F
	09	J02A J02B J04Z
		J08Z J21Z J22Z
	12	M09A M09B M37Z
	21B	X01A X01B X07A
		X07B
	22	Y02A Y02B Y02C
86.6D.1D↔		BORP MBOR VAC
		VBOR
	04	E36A E36B
	05	F04Z F13A F13B
	06	G12A G16A G38A
		G38B
	08	I28A I28B I28C
		I32C
	09	J02A J02B J04Z
		J08Z J21Z J22Z
	12	M09A M09B M37Z
	21B	X01A X01B X07A
		X07B
	22	Y02A Y02B Y02C
86.6D.1E↔		BORP MBOR VAC
		VBOR
	04	E36A E36B
	05	F04Z F13A F13B
	06	G12A G16A G38A
		G38B
	08	I28A I28B I28C
		I32C
	09	J02A J02B J04Z
		J08Z J21Z J22Z
	12	M09A M09B M37Z
	21B	X01A X01B X07A
		X07B
	22	Y02A Y02B Y02C
86.7A.31↔		BORP MBOR VAC
		VAC I VAC II VB
		VBOR
	01	B17A B17B
	02	C14Z
	03	D24A D24B D24C
	04	E36A E36B
	05	F04Z F13A F13B
		F21A F21B F21C
	06	G12A G16A G38A
		G38B
	08	I02A I02B I02C
		I12A I12B I12C

PROC

CHOP	MDC	DRG
		I22Z I28A I28B
		I28C I50Z
	09	J02A J02B J04Z
		J08Z J21Z J22Z
	12	M09A M09B M37Z
	21B	X06A X06B X06C
	22	Y02A Y02B Y02C
	Prä	B61B B61C B61D
86.7A.36↔		BORP MBOR VAC
		VAC I VAC II VB
		VBOR
	01	B17A B17B
	04	E36A E36B
	05	F04Z F13A F13B
		F21A F21B F21C
	06	G12A G16A G38A
		G38B
	08	I02A I02B I02C
		I12A I12B I12C
		I28A I28B I28C
		I32A I32B I32C
		I32D I32E I32F
	09	J02A J02B J03A
		J03B J04Z J08Z
		J21Z J22Z
	12	M09A M09B M37Z
	21B	X06A X06B X06C
	22	Y02A Y02B Y02C
	Prä	B61B B61C B61D
86.7A.3D↔		BORP MBOR VAC
		VAC I VAC II VB
		VBOR
	01	B17A B17B
	03	D24A D24B D24C
	04	E36A E36B
	05	F04Z F13A F13B
		F21A F21B F21C
	06	G12A G16A G38A
		G38B
	08	I02A I02B I02C
		I12A I12B I12C
		I22Z I28A I28B
		I28C I50Z
	09	J02A J02B J04Z
		J08Z J21Z J22Z
	12	M09A M09B M37Z
	21B	X06A X06B X06C
	22	Y02A Y02B Y02C
	Prä	B61B B61C B61D
86.7A.3E↔		BORP MBOR VAC
		VAC I VAC II VB
		VBOR
	01	B17A B17B
	03	D24A D24B D24C
	04	E36A E36B
	05	F04Z F13A F13B
		F21A F21B F21C
	06	G12A G16A G38A
		G38B
	08	I02A I02B I02C
		I12A I12B I12C
		I22Z I28A I28B
		I28C I50Z
	09	J02A J02B J04Z
		J08Z J21Z J22Z
	12	M09A M09B M37Z
	21B	X06A X06B X06C
	22	Y02A Y02B Y02C
	Prä	B61B B61C B61D
86.7A.41↔		BORP KORP MBOR
		MKOR VAC VAC I
		VAC II VBOR VKOR
	01	B17A B17B
	02	C14Z
	03	D24A D24B D24C
	04	E36A E36B
	05	F04Z F13A F13B
		F21A F21B F21C
	06	G12A G16A G38A
		G38B
	08	I02A I02B I02C
		I12A I12B I12C
		I22Z I50Z
	09	J02A J02B J04Z
		J08Z J14Z J21Z
		J22Z
	12	M09A M09B M37Z
	21B	X01A X01B X07A
		X07B
	22	Y02A Y02B Y02C
	Prä	B61B B61C B61D
86.7A.46↔		BORP KORP MBOR
		MKOR VAC VAC I
		VAC II VB VBOR
		VKOR
	01	B17A B17B
	04	E36A E36B
	05	F04Z F13A F13B
		F21A F21B F21C
	06	G12A G16A G38A
		G38B
	08	I02A I02B I02C
		I12A I12B I12C
		I28A I28B I28C
		I32A I32B I32C
		I32D I32E I32F
	09	J02A J02B J03A
		J03B J04Z J08Z
		J14Z J21Z J22Z
	12	M09A M09B M37Z
	21B	X01A X01B X06A
		X06B X06C X07A
		X07B
	22	Y02A Y02B Y02C
	Prä	B61B B61C B61D
86.7A.4D↔		BORP KORP MBOR
		MKOR VAC VAC I
		VAC II VBOR VKOR
	01	B17A B17B
	03	D24A D24B D24C
	04	E36A E36B
	05	F04Z F13A F13B
		F21A F21B F21C
	06	G12A G16A G38A
		G38B
	08	I02A I02B I02C
		I12A I12B I12C
		I22Z I50Z
	09	J02A J02B J04Z
		J08Z J14Z J21Z
		J22Z
	12	M09A M09B M37Z
	21B	X01A X01B X07A
		X07B
	22	Y02A Y02B Y02C
	Prä	B61B B61C B61D
86.7A.4E↔		BORP KORP MBOR
		MKOR VAC VAC I
		VAC II VBOR VKOR
	01	B17A B17B
	03	D24A D24B D24C
	04	E36A E36B
	05	F04Z F13A F13B
		F21A F21B F21C
	06	G12A G12B G16A
		G38A G38B
	08	I02A I02B I02C
		I12A I12B I12C
		I22Z I50Z
	09	J02A J02B J04Z
		J08Z J14Z J21Z
		J22Z
	12	M05Z M09A M09B
		M37Z
	13	N09Z
	21B	X01A X01B X07A
		X07B
	22	Y02A Y02B Y02C
	Prä	B61B B61C B61D
86.7A.51↔		BORP MBOR VAC
		VAC I VAC II VB
		VBOR
	01	B17A B17B
	02	C14Z
	03	D24A D24B D24C
	04	E36A E36B
	05	F04Z F13A F13B
		F21A F21B F21C
	06	G12A G16A G38A
		G38B
	08	I02A I02B I02C
		I12A I12B I12C
		I22Z I28A I28B
		I28C I50Z
	09	J02A J02B J04Z
		J08Z J21Z J22Z
	12	M09A M09B M37Z
	21B	X01A X01B X06A
		X06B X06C X07A
		X07B
	22	Y02A Y02B Y02C
	Prä	B61B B61C B61D
86.7A.56↔		BORP MBOR VAC
		VAC I VAC II VB
		VBOR
	01	B17A B17B
	04	E36A E36B
	05	F04Z F13A F13B
		F21A F21B F21C
	06	G12A G16A G38A
		G38B
	08	I02A I02B I02C
		I12A I12B I12C
		I28A I28B I28C
		I32A I32B I32C
		I32D I32E I32F
	09	J02A J02B J03A
		J03B J04Z J08Z
		J21Z J22Z
	12	M09A M09B M37Z
	21B	X01A X01B X06A
		X06B X06C X07A
		X07B
	22	Y02A Y02B Y02C
	Prä	B61B B61C B61D
86.7A.5D↔		BORP MBOR VAC
		VAC I VAC II VB
		VBOR
	01	B17A B17B
	03	D24A D24B D24C

CHOP	MDC	DRG
	04	E36A E36B
	05	F04Z F13A F13B F21A F21B F21C
	06	G12A G16A G38A G38B
	08	I02A I02B I02C I12A I12B I12C I22Z I28A I28B I28C I50Z
	09	J02A J02B J04Z J08Z J21Z J22Z
	12	M09A M09B M37Z
	21B	X01A X01B X06A X06B X06C X07A X07B
	22	Y02A Y02B Y02C
	Prä	B61B B61C B61D
86.7A.5E↔		BORP MBOR VAC VAC I VAC II VB VBOR
	01	B17A B17B
	03	D24A D24B D24C
	04	E36A E36B
	05	F04Z F13A F13B F21A F21B F21C
	06	G12A G16A G38A G38B
	08	I02A I02B I02C I12A I12B I12C I22Z I28A I28B I28C I50Z
	09	J02A J02B J04Z J08Z J21Z J22Z
	12	M09A M09B M37Z
	21B	X01A X01B X06A X06B X06C X07A X07B
	22	Y02A Y02B Y02C
	Prä	B61B B61C B61D
86.7A.61↔		BORP MBOR VAC VAC I VAC II VBOR
	01	B17A B17B
	02	C14Z
	03	D24A D24B D24C
	04	E36A E36B
	05	F04Z F13A F13B F21A F21B F21C
	06	G12A G16A G38A G38B
	08	I02A I02B I02C I12A I12B I12C I22Z I50Z
	09	J02A J02B J04Z J08Z J14Z J21Z J22Z
	12	M09A M09B M37Z
	21B	X01A X01B X07A X07B
	22	Y02A Y02B Y02C
	Prä	B61B B61C B61D
86.7A.66↔		BORP MBOR VAC VAC I VAC II VB VBOR
	01	B17A B17B
	04	E36A E36B
	05	F04Z F13A F13B F21A F21B F21C
	06	G12A G16A G38A G38B
	08	I02A I02B I02C I12A I12B I12C I22Z I28A I28B I28C I50Z
	09	J02A J02B J04Z J08Z J21Z J22Z
	12	M09A M09B M37Z
	21B	X01A X01B X06A X06B X06C X07A X07B
	22	Y02A Y02B Y02C
	Prä	B61B B61C B61D
86.7A.6D↔		BORP MBOR VAC VAC I VAC II VBOR
	01	B17A B17B
	03	D24A D24B D24C
	04	E36A E36B
	05	F04Z F13A F13B F21A F21B F21C
	06	G12A G16A G38A G38B
	08	I02A I02B I02C I12A I12B I12C I22Z I50Z
	09	J02A J02B J04Z J08Z J14Z J21Z J22Z
	12	M09A M09B M37Z
	21B	X01A X01B X07A X07B
	22	Y02A Y02B Y02C
	Prä	B61B B61C B61D
86.7A.6E↔		BORP MBOR VAC VAC I VAC II VBOR
	01	B17A B17B
	03	D24A D24B D24C
	04	E36A E36B
	05	F04Z F13A F13B F21A F21B F21C
	06	G12A G12B G16A G38A G38B
	08	I02A I02B I02C I12A I12B I12C I22Z I50Z
	09	J02A J02B J04Z J08Z J14Z J21Z J22Z
	12	M05Z M09A M09B M37Z
	13	N09Z
	21B	X01A X01B X07A X07B
	22	Y02A Y02B Y02C
	Prä	B61B B61C B61D
86.7A.71↔		BORP MBOR VAC VAC I VAC II VB VBOR
	01	B17A B17B
	02	C14Z
	03	D24A D24B D24C
	04	E36A E36B
	05	F04Z F13A F13B F21A F21B F21C
	06	G12A G16A G38A G38B
	08	I02A I02B I02C I12A I12B I12C I22Z I28A I28B I28C I50Z
	09	J02A J02B J04Z J08Z J21Z J22Z
	12	M09A M09B M37Z
	21B	X01A X01B X06A X06B X06C X07A X07B
	22	Y02A Y02B Y02C
	Prä	B61B B61C B61D
86.7A.76↔		BORP MBOR VAC VAC I VAC II VB VBOR
	01	B17A B17B
	04	E36A E36B
	05	F04Z F13A F13B F21A F21B F21C
	06	G12A G16A G38A G38B
	08	I02A I02B I02C I12A I12B I12C I28A I28B I28C I32A I32B I32C I32D I32E I32F
	09	J02A J02B J03A J03B J04Z J08Z J21Z J22Z
	12	M09A M09B M37Z
	21B	X01A X01B X06A X06B X06C X07A X07B
	22	Y02A Y02B Y02C
	Prä	B61B B61C B61D
86.7A.7D↔		BORP MBOR VAC VAC I VAC II VB VBOR
	01	B17A B17B
	03	D24A D24B D24C
	04	E36A E36B
	05	F04Z F13A F13B F21A F21B F21C
	06	G12A G16A G38A G38B
	08	I02A I02B I02C I12A I12B I12C I22Z I28A I28B I28C I50Z
	09	J02A J02B J04Z J08Z J21Z J22Z
	12	M09A M09B M37Z
	21B	X01A X01B X06A X06B X06C X07A X07B
	22	Y02A Y02B Y02C
	Prä	B61B B61C B61D
86.7A.7E↔		BORP MBOR VAC VAC I VAC II VB VBOR
	01	B17A B17B
	03	D24A D24B D24C
	04	E36A E36B
	05	F04Z F13A F13B F21A F21B F21C
	06	G12A G16A G38A G38B
	08	I02A I02B I02C I12A I12B I12C I22Z I28A I28B I28C I50Z
	09	J02A J02B J04Z J08Z J21Z J22Z
	12	M09A M09B M37Z

PROC

CHOP	MDC	DRG
	21B	X01A X01B X06A X06B X06C X07A X07B
	22	Y02A Y02B Y02C
	Prä	B61B B61C B61D
86.7A.81↔		BORP MBOR VAC VAC I VAC II VBOR
	01	B17A B17B
	02	C14Z
	03	D24A D24B D24C
	04	E36A E36B
	05	F04Z F13A F13B F21A F21B F21C
	06	G12A G16A G38A G38B
	08	I02A I02B I02C I12A I12B I12C I22Z I50Z
	09	J02A J02B J04Z J08Z J14Z J21Z J22Z
	12	M09A M09B M37Z
	21B	X01A X01B X07A X07B
	22	Y02A Y02B Y02C
	Prä	B61B B61C B61D
86.7A.86↔		BORP MBOR VAC VAC I VAC II VB VBOR
	01	B17A B17B
	04	E36A E36B
	05	F04Z F13A F13B F21A F21B F21C
	06	G12A G16A G38A G38B
	08	I02A I02B I02C I12A I12B I12C I28A I28B I28C I32A I32B I32C I32D I32E I32F
	09	J02A J02B J03A J03B J04Z J08Z J14Z J21Z J22Z
	12	M09A M09B M37Z
	21B	X01A X01B X06A X06B X06C X07A X07B
	22	Y02A Y02B Y02C
	Prä	B61B B61C B61D
86.7A.8D↔		BORP MBOR VAC VAC I VAC II VBOR
	01	B17A B17B
	03	D24A D24B D24C
	04	E36A E36B
	05	F04Z F13A F13B F21A F21B F21C
	06	G12A G16A G38A G38B
	08	I02A I02B I02C I12A I12B I12C I22Z I50Z
	09	J02A J02B J04Z J08Z J14Z J21Z J22Z
	12	M09A M09B M37Z
	21B	X01A X01B X07A X07B
	22	Y02A Y02B Y02C
	Prä	B61B B61C B61D
86.7A.8E↔		BORP MBOR VAC VAC I VAC II VBOR
	01	B17A B17B
	03	D24A D24B D24C
	04	E36A E36B
	05	F04Z F13A F13B F21A F21B F21C
	06	G12A G12B G16A G38A G38B
	08	I02A I02B I02C I12A I12B I12C I22Z I50Z
	09	J02A J02B J04Z J08Z J14Z J21Z J22Z
	12	M05Z M09A M09B M37Z
	13	N09Z
	21B	X01A X01B X07A X07B
	22	Y02A Y02B Y02C
	Prä	B61B B61C B61D
86.7A.B1↔	03	D12A D12B
	05	F04Z F13A F13B
	08	I28A I28B I28C
	09	J02A J02B J03A J03B J04Z J10A J10B
	12	M09A M09B M37Z
	21B	X06A X06B X06C
86.7A.B6↔		BORP MBOR VAC VAC I VAC II VB VBOR
	01	B17A B17B
	04	E36A E36B
	05	F04Z F13A F13B F21A F21B F21C
	06	G12A G16A G38A G38B
	08	I02A I02B I02C I12A I12B I12C I28A I28B I28C I32A I32B I32C I32D I32E I32F
	09	J02A J02B J03A J03B J04Z J08Z J21Z J22Z
	12	M09A M09B M37Z
	21B	X01A X01B X06A X06B X06C X07A X07B
	22	Y02A Y02B Y02C
	Prä	B61B B61C B61D
86.7A.BD↔	05	F04Z F13A F13B
	08	I28A I28B I28C
	09	J02A J02B J03A J03B J04Z J10A J10B
	12	M09A M09B M37Z
	21B	X06A X06B X06C
86.7A.BE↔	03	D12A D12B
	05	F04Z F13A F13B
	06	G12A G12B
	08	I28A I28B I28C
	09	J02A J02B J03A J03B J04Z J10A J10B
	12	M05Z M09A M09B M37Z
	13	N09Z
	21B	X06A X06B X06C
86.7A.D1↔	03	D12A D12B
	05	F04Z F13A F13B
	08	I28A I28B I28C
	09	J02A J02B J03A J03B J04Z J10A J10B
	12	M09A M09B M37Z
	21B	X06A X06B X06C
86.7A.D6↔		BORP MBOR VAC VAC I VAC II VB VBOR
	01	B17A B17B
	04	E36A E36B
	05	F04Z F13A F13B F21A F21B F21C
	06	G12A G16A G38A G38B
	08	I02A I02B I02C I12A I12B I12C I28A I28B I28C I32A I32B I32C I32D I32E I32F
	09	J02A J02B J03A J03B J04Z J08Z J21Z J22Z
	12	M09A M09B M37Z
	21B	X01A X01B X06A X06B X06C X07A X07B
	22	Y02A Y02B Y02C
	Prä	B61B B61C B61D
86.7A.DD↔	05	F04Z F13A F13B
	08	I28A I28B I28C
	09	J02A J02B J03A J03B J04Z J10A J10B
	12	M09A M09B M37Z
	21B	X06A X06B X06C
86.7A.DE↔	03	D12A D12B
	05	F04Z F13A F13B
	06	G12A G12B
	08	I28A I28B I28C
	09	J02A J02B J03A J03B J04Z J10A J10B
	12	M05Z M09A M09B M37Z
	13	N09Z
	21B	X06A X06B X06C
86.7B.11↔		BORP KORP MBOR MKOR VAC VAC I VAC II VBOR VKOR
	01	B17A B17B
	02	C14Z
	03	D24A D24B D24C
	04	E36A E36B
	05	F04Z F13A F13B F21A F21B F21C
	06	G12A G16A G38A G38B
	08	I02A I02B I02C I12A I12B I12C I22Z I50Z
	09	J02A J02B J04Z J08Z J14Z J21Z J22Z
	12	M09A M09B M37Z
	21B	X01A X01B X07A X07B
	22	Y02A Y02B Y02C

CHOP	MDC	DRG
	Prä	B61B B61C B61D
86.7B.12↔		BORP KORP MBOR MKOR VAC VAC I VAC II VBOR VKOR
	01	B17A B17B
	03	D24A D24B D24C
	04	E36A E36B
	05	F04Z F13A F13B F21A F21B F21C
	06	G12A G16A G38A G38B
	08	I02A I02B I02C I12A I12B I12C I22Z I50Z
	09	J02A J02B J04Z J08Z J14Z J21Z J22Z
	12	M09A M09B M37Z
	21B	X01A X01B X07A X07B
	22	Y02A Y02B Y02C
	Prä	B61B B61C B61D
86.7B.13↔		BORP KORP MBOR MKOR VAC VAC I VAC II VBOR VKOR
	01	B17A B17B
	03	D24A D24B D24C
	04	E36A E36B
	05	F04Z F13A F13B F21A F21B F21C
	06	G12A G16A G38A G38B
	08	I02A I02B I02C I12A I12B I12C I22Z I50Z
	09	J02A J02B J04Z J08Z J14Z J21Z J22Z
	12	M09A M09B M37Z
	21B	X01A X01B X07A X07B
	22	Y02A Y02B Y02C
	Prä	B61B B61C B61D
86.7B.14↔		BORP KORP MBOR MKOR VAC VAC I VAC II VBOR VKOR
	01	B17A B17B
	03	D24A D24B D24C
	04	E36A E36B
	05	F04Z F13A F13B F21A F21B F21C
	06	G12A G16A G38A G38B
	08	I02A I02B I02C I12A I12B I12C I22Z I50Z
	09	J02A J02B J04Z J08Z J14Z J21Z J22Z
	12	M09A M09B M37Z
	21B	X01A X01B X07A X07B
	22	Y02A Y02B Y02C
	Prä	B61B B61C B61D
86.7B.15↔		BORP KORP MBOR MKOR VAC VAC I VAC II VBOR VKOR
	01	B17A B17B
	03	D24A D24B D24C
	04	E36A E36B
	05	F04Z F13A F13B F21A F21B F21C
	06	G12A G16A G38A G38B
	08	I02A I02B I02C I12A I12B I12C I22Z I50Z
	09	J02A J02B J04Z J08Z J14Z J21Z J22Z
	12	M09A M09B M37Z
	21B	X01A X01B X07A X07B
	22	Y02A Y02B Y02C
	Prä	B61B B61C B61D
86.7B.16↔		BORP KORP MBOR MKOR VAC VAC I VAC II VBOR VKOR
	01	B17A B17B
	04	E36A E36B
	05	F04Z F13A F13B F21A F21B F21C
	06	G12A G16A G38A G38B
	08	I02A I02B I02C I12A I12B I12C I32A I32B I32C I32D I32E I32F
	09	J02A J02B J03A J03B J04Z J08Z J14Z J21Z J22Z
	12	M09A M09B M37Z
	21B	X01A X01B X07A X07B
	22	Y02A Y02B Y02C
	Prä	B61B B61C B61D
86.7B.17↔		BORP KORP MBOR MKOR VAC VAC I VAC II VBOR VKOR
	01	B17A B17B
	03	D24A D24B D24C
	04	E36A E36B
	05	F04Z F13A F13B F21A F21B F21C
	06	G12A G16A G38A G38B
	08	I02A I02B I02C I12A I12B I12C I22Z I50Z
	09	J02A J02B J04Z J08Z J14Z J21Z J22Z
	12	M09A M09B M37Z
	21B	X01A X01B X07A X07B
	22	Y02A Y02B Y02C
	Prä	B61B B61C B61D
86.7B.18↔		BORP KORP MBOR MKOR VAC VAC I VAC II VBOR VKOR
	01	B17A B17B
	03	D24A D24B D24C
	04	E36A E36B
	05	F04Z F13A F13B F21A F21B F21C
	06	G12A G12B G16A G38A G38B
	08	I02A I02B I02C I12A I12B I12C I22Z I50Z
	09	J02A J02B J04Z J08Z J14Z J21Z J22Z
	12	M05Z M09A M09B M37Z
	13	N09Z
	21B	X01A X01B X07A X07B
	22	Y02A Y02B Y02C
	Prä	B61B B61C B61D
86.7B.1A↔		BORP KORP MBOR MKOR VAC VAC I VAC II VBOR VKOR
	01	B17A B17B
	03	D24A D24B D24C
	04	E36A E36B
	05	F04Z F13A F13B F21A F21B F21C
	06	G12A G12B G16A G38A G38B
	08	I02A I02B I02C I12A I12B I12C I22Z I50Z
	09	J02A J02B J04Z J08Z J14Z J21Z J22Z
	12	M05Z M09A M09B M37Z
	13	N09Z
	21B	X01A X01B X07A X07B
	22	Y02A Y02B Y02C
	Prä	B61B B61C B61D
86.7B.1B↔		BORP KORP MBOR MKOR VAC VAC I VAC II VBOR VKOR
	01	B17A B17B
	03	D24A D24B D24C
	04	E36A E36B
	05	F04Z F13A F13B F21A F21B F21C
	06	G12A G16A G38A G38B
	08	I02A I02B I02C I12A I12B I12C I22Z I50Z
	09	J02A J02B J04Z J08Z J14Z J21Z J22Z
	12	M09A M09B M37Z
	21B	X01A X01B X07A X07B
	22	Y02A Y02B Y02C
	Prä	B61B B61C B61D
86.7B.1C↔		BORP KORP MBOR MKOR VAC VAC I VAC II VBOR VKOR
	01	B17A B17B
	03	D24A D24B D24C
	04	E36A E36B
	05	F04Z F13A F13B F21A F21B F21C
	06	G12A G16A G38A G38B
	08	I02A I02B I02C I12A I12B I12C I22Z I50Z
	09	J02A J02B J04Z J08Z J14Z J21Z J22Z

PROC

CHOP	MDC	DRG
	12	M09A M09B M37Z
	21B	X01A X01B X07A X07B
	22	Y02A Y02B Y02C
	Prä	B61B B61C B61D
86.7B.1D↔		BORP KORP MBOR MKOR VAC VAC I VAC II VBOR VKOR
	01	B17A B17B
	03	D24A D24B D24C
	04	E36A E36B
	05	F04Z F13A F13B F21A F21B F21C
	06	G12A G16A G38A G38B
	08	I02A I02B I02C I12A I12B I12C I22Z I50Z
	09	J02A J02B J04Z J08Z J14Z J21Z J22Z
	12	M09A M09B M37Z
	21B	X01A X01B X07A X07B
	22	Y02A Y02B Y02C
	Prä	B61B B61C B61D
86.7C.11↔		BORP KORP MBOR MKOR VAC VAC I VAC II VBOR VKOR
	01	B17A B17B
	02	C14Z
	03	D24A D24B D24C
	04	E36A E36B
	05	F04Z F13A F13B F21A F21B F21C
	06	G12A G16A G38A G38B
	08	I02A I02B I02C I12A I12B I12C I22Z I50Z
	09	J02A J02B J04Z J08Z J14Z J21Z J22Z
	12	M09A M09B M37Z
	21B	X01A X01B X07A X07B
	22	Y02A Y02B Y02C
	Prä	B61B B61C B61D
86.7C.12↔		BORP KORP MBOR MKOR VAC VAC I VAC II VBOR VKOR
	01	B17A B17B
	03	D24A D24B D24C
	04	E36A E36B
	05	F04Z F13A F13B F21A F21B F21C
	06	G12A G16A G38A G38B
	08	I02A I02B I02C I12A I12B I12C I22Z I50Z
	09	J02A J02B J04Z J08Z J14Z J21Z J22Z
	12	M09A M09B M37Z
	21B	X01A X01B X07A X07B
	22	Y02A Y02B Y02C
	Prä	B61B B61C B61D
86.7C.13↔		BORP KORP MBOR MKOR VAC VAC I VAC II VBOR VKOR
	01	B17A B17B
	03	D24A D24B D24C
	04	E36A E36B
	05	F04Z F13A F13B F21A F21B F21C
	06	G12A G16A G38A G38B
	08	I02A I02B I02C I12A I12B I12C I22Z I50Z
	09	J02A J02B J04Z J08Z J14Z J21Z J22Z
	12	M09A M09B M37Z
	21B	X01A X01B X07A X07B
	22	Y02A Y02B Y02C
	Prä	B61B B61C B61D
86.7C.14↔		BORP KORP MBOR MKOR VAC VAC I VAC II VBOR VKOR
	01	B17A B17B
	03	D24A D24B D24C
	04	E36A E36B
	05	F04Z F13A F13B F21A F21B F21C
	06	G12A G16A G38A G38B
	08	I02A I02B I02C I12A I12B I12C I22Z I50Z
	09	J02A J02B J04Z J08Z J14Z J21Z J22Z
	12	M09A M09B M37Z
	21B	X01A X01B X07A X07B
	22	Y02A Y02B Y02C
	Prä	B61B B61C B61D
86.7C.15↔		BORP KORP MBOR MKOR VAC VAC I VAC II VBOR VKOR
	01	B17A B17B
	03	D24A D24B D24C
	04	E36A E36B
	05	F04Z F13A F13B F21A F21B F21C
	06	G12A G16A G38A G38B
	08	I02A I02B I02C I12A I12B I12C I22Z I50Z
	09	J02A J02B J04Z J08Z J14Z J21Z J22Z
	12	M09A M09B M37Z
	21B	X01A X01B X07A X07B
	22	Y02A Y02B Y02C
	Prä	B61B B61C B61D
86.7C.16↔		BORP KORP MBOR MKOR VAC VAC I VAC II VBOR VKOR
	01	B17A B17B
	04	E36A E36B
	05	F04Z F13A F13B F21A F21B F21C
	06	G12A G16A G38A G38B
	08	I02A I02B I02C I12A I12B I12C I22Z I50Z
	09	J02A J02B J03A J03B J04Z J08Z J14Z J21Z J22Z
	12	M09A M09B M37Z
	21B	X01A X01B X07A X07B
	22	Y02A Y02B Y02C
	Prä	B61B B61C B61D
86.7C.17↔		BORP KORP MBOR MKOR VAC VAC I VAC II VBOR VKOR
	01	B17A B17B
	03	D24A D24B D24C
	04	E36A E36B
	05	F04Z F13A F13B F21A F21B F21C
	06	G12A G16A G38A G38B
	08	I02A I02B I02C I12A I12B I12C I22Z I50Z
	09	J02A J02B J04Z J08Z J14Z J21Z J22Z
	12	M09A M09B M37Z
	21B	X01A X01B X07A X07B
	22	Y02A Y02B Y02C
	Prä	B61B B61C B61D
86.7C.18↔		BORP KORP MBOR MKOR VAC VAC I VAC II VBOR VKOR
	01	B17A B17B
	03	D24A D24B D24C
	04	E36A E36B
	05	F04Z F13A F13B F21A F21B F21C
	06	G12A G12B G16A G38A G38B
	08	I02A I02B I02C I12A I12B I12C I22Z I50Z
	09	J02A J02B J04Z J08Z J14Z J21Z J22Z
	12	M05Z M09A M09B M37Z
	13	N09Z
	21B	X01A X01B X07A X07B
	22	Y02A Y02B Y02C
	Prä	B61B B61C B61D
86.7C.1A↔		BORP KORP MBOR MKOR VAC VAC I VAC II VBOR VKOR
	01	B17A B17B
	03	D24A D24B D24C
	04	E36A E36B
	05	F04Z F13A F13B F21A F21B F21C
	06	G12A G12B G16A G38A G38B
	08	I02A I02B I02C I12A I12B I12C I22Z I50Z

CHOP	MDC	DRG
	09	J02A J02B J04Z J08Z J14Z J21Z J22Z
	12	M05Z M09A M09B M37Z
	13	N09Z
	21B	X01A X01B X07A X07B
	22	Y02A Y02B Y02C
	Prä	B61B B61C B61D
86.7C.1B↔		BORP KORP MBOR MKOR VAC VAC I VAC II VBOR VKOR
	01	B17A B17B
	03	D24A D24B D24C
	04	E36A E36B
	05	F04Z F13A F13B F21A F21B F21C
	06	G12A G16A G38A G38B
	08	I02A I02B I02C I12A I12B I12C I22Z I50Z
	09	J02A J02B J04Z J08Z J14Z J21Z J22Z
	12	M09A M09B M37Z
	21B	X01A X01B X07A X07B
	22	Y02A Y02B Y02C
	Prä	B61B B61C B61D
86.7C.1C↔		BORP KORP MBOR MKOR VAC VAC I VAC II VBOR VKOR
	01	B17A B17B
	03	D24A D24B D24C
	04	E36A E36B
	05	F04Z F13A F13B F21A F21B F21C
	06	G12A G16A G38A G38B
	08	I02A I02B I02C I12A I12B I12C I22Z I50Z
	09	J02A J02B J04Z J08Z J14Z J21Z J22Z
	12	M09A M09B M37Z
	21B	X01A X01B X07A X07B
	22	Y02A Y02B Y02C
	Prä	B61B B61C B61D
86.7C.1D↔		BORP KORP MBOR MKOR VAC VAC I VAC II VBOR VKOR
	01	B17A B17B
	03	D24A D24B D24C
	04	E36A E36B
	05	F04Z F13A F13B F21A F21B F21C
	06	G12A G16A G38A G38B
	08	I02A I02B I02C I12A I12B I12C I22Z I50Z
	09	J02A J02B J04Z J08Z J14Z J21Z J22Z
	12	M09A M09B M37Z
	21B	X01A X01B X07A X07B
	22	Y02A Y02B Y02C
	Prä	B61B B61C B61D
86.7D.11↔		BORP KORP MBOR MKOR VAC VAC I VAC II VB VBOR VKOR
	01	B17A B17B
	02	C14Z
	03	D02A D02B D24A D24B
	04	E36A E36B
	05	F04Z F13A F13B F21A F21B F21C
	06	G12A G16A G38A G38B
	08	I02A I02B I02C
	09	J01A J01B J02A J02B J04Z J08Z J14Z J21Z J22Z
	12	M09A M09B M37Z
	21A	W01A W01B
	21B	X01A X07A X07B
	22	Y02A Y02B
86.7D.12↔		BORP KORP MBOR MKOR VAC VAC I VAC II VB VBOR VKOR
	01	B17A B17B
	03	D02A D02B D24A D24B
	04	E36A E36B
	05	F04Z F13A F13B F21A F21B F21C
	06	G12A G16A G38A G38B
	08	I02A I02B I02C
	09	J01A J01B J02A J02B J04Z J08Z J14Z J21Z J22Z
	12	M09A M09B M37Z
	21A	W01A W01B
	21B	X01A X07A X07B
	22	Y02A Y02B
86.7D.13↔		BORP KORP MBOR MKOR VAC VAC I VAC II VB VBOR VKOR
	01	B17A B17B
	03	D02A D02B D24A D24B
	04	E36A E36B
	05	F04Z F13A F13B F21A F21B F21C
	06	G12A G16A G38A G38B
	08	I02A I02B I02C
	09	J01A J01B J02A J02B J04Z J08Z J14Z J21Z J22Z
	12	M09A M09B M37Z
	21A	W01A W01B
	21B	X01A X07A X07B
	22	Y02A Y02B
86.7D.14↔		BORP KORP MBOR MKOR VAC VAC I VAC II VB VBOR VKOR
	01	B17A B17B
	03	D02A D02B D24A D24B
	04	E36A E36B
	05	F04Z F13A F13B F21A F21B F21C
	06	G12A G16A G38A G38B
	08	I02A I02B I02C
	09	J01A J01B J02A J02B J04Z J08Z J14Z J21Z J22Z
	12	M09A M09B M37Z
	21A	W01A W01B
	21B	X01A X07A X07B
	22	Y02A Y02B
86.7D.15↔		BORP KORP MBOR MKOR VAC VAC I VAC II VB VBOR VKOR
	01	B17A B17B
	03	D02A D02B D24A D24B
	04	E36A E36B
	05	F04Z F13A F13B F21A F21B F21C
	06	G12A G16A G38A G38B
	08	I02A I02B I02C
	09	J01A J01B J02A J02B J04Z J08Z J14Z J21Z J22Z
	12	M09A M09B M37Z
	21A	W01A W01B
	21B	X01A X07A X07B
	22	Y02A Y02B
86.7D.16↔		BORP KORP MBOR MKOR VAC VAC I VAC II VB VBOR VKOR
	01	B17A B17B
	03	D02A D02B D24A D24B
	04	E36A E36B
	05	F04Z F13A F13B F21A F21B F21C
	06	G12A G16A G38A G38B
	08	I02A I02B I02C I28A I28B I28C
	09	J01A J01B J02A J02B J03A J03B J04Z J08Z J14Z J21Z J22Z
	12	M09A M09B M37Z
	21A	W01A W01B
	21B	X01A X06A X06B X06C X07A X07B
	22	Y02A Y02B
86.7D.17↔		BORP KORP MBOR MKOR VAC VAC I VAC II VB VBOR VKOR
	01	B17A B17B
	03	D02A D02B D24A D24B
	04	E36A E36B
	05	F04Z F13A F13B F21A F21B F21C
	06	G12A G16A G38A G38B
	08	I02A I02B I02C

PROC

PROC

CHOP	MDC	DRG
	09	J01A J01B J02A J02B J04Z J08Z J14Z J21Z J22Z
	12	M09A M09B M37Z
	21A	W01A W01B
	21B	X01A X07A X07B
	22	Y02A Y02B
86.7D.18↔		BORP KORP MBOR MKOR VAC VAC I VAC II VB VBOR VKOR
	01	B17A B17B
	03	D02A D02B D24A D24B
	04	E36A E36B
	05	F04Z F13A F13B F21A F21B F21C
	06	G12A G16A G38A G38B
	08	I02A I02B I02C
	09	J01A J01B J02A J02B J04Z J08Z J14Z J21Z J22Z
	12	M09A M09B M37Z
	21A	W01A W01B
	21B	X01A X07A X07B
	22	Y02A Y02B
86.7D.1A↔		BORP KORP MBOR MKOR VAC VAC I VAC II VB VBOR VKOR
	01	B17A B17B
	03	D02A D02B D24A D24B
	04	E36A E36B
	05	F04Z F13A F13B F21A F21B F21C
	06	G12A G16A G38A G38B
	08	I02A I02B I02C
	09	J01A J01B J02A J02B J04Z J08Z J14Z J21Z J22Z
	12	M09A M09B M37Z
	21A	W01A W01B
	21B	X01A X07A X07B
	22	Y02A Y02B
86.7D.1B↔		BORP KORP MBOR MKOR VAC VAC I VAC II VB VBOR VKOR
	01	B17A B17B
	03	D02A D02B D24A D24B
	04	E36A E36B
	05	F04Z F13A F13B F21A F21B F21C
	06	G12A G16A G38A G38B
	08	I02A I02B I02C
	09	J01A J01B J02A J02B J04Z J08Z J14Z J21Z J22Z
	12	M09A M09B M37Z
	21A	W01A W01B
	21B	X01A X07A X07B
	22	Y02A Y02B
86.7D.1C↔		BORP KORP MBOR MKOR VAC VAC I VAC II VB VBOR VKOR
	01	B17A B17B
	03	D02A D02B D24A D24B
	04	E36A E36B
	05	F04Z F13A F13B F21A F21B F21C
	06	G12A G16A G38A G38B
	08	I02A I02B I02C
	09	J01A J01B J02A J02B J04Z J08Z J14Z J21Z J22Z
	12	M09A M09B M37Z
	21A	W01A W01B
	21B	X01A X07A X07B
	22	Y02A Y02B
86.7D.1D↔		BORP KORP MBOR MKOR VAC VAC I VAC II VB VBOR VKOR
	01	B17A B17B
	03	D02A D02B D24A D24B
	04	E36A E36B
	05	F04Z F13A F13B F21A F21B F21C
	06	G12A G16A G38A G38B
	08	I02A I02B I02C
	09	J01A J01B J02A J02B J04Z J08Z J14Z J21Z J22Z
	12	M09A M09B M37Z
	21A	W01A W01B
	21B	X01A X07A X07B
	22	Y02A Y02B
86.7E.21↔		BORP MBOR VAC VAC I VAC II VB VBOR
	01	B17A B17B
	03	D12A D12B
	04	E36A E36B
	05	F04Z F13A F13B F13C F21A F21B F21C
	06	G12A G12B G16A G38A G38B
	08	I02A I02B I02C I12A I12B I12C I22Z I28A I28B I28C I32C I50Z
	09	J02A J02B J03A J03B J04Z J08Z J10A J10B J21Z J22Z
	12	M09A M09B M37Z
	21B	X01A X01B X04Z X05Z X06A X06B X06C X07A X07B
	22	Y02A Y02B Y02C
	Prä	B61B B61C B61D
86.7E.26↔		BORP MBOR VAC VAC I VAC II VB VBOR
	01	B17A B17B
	04	E36A E36B
	05	F04Z F13A F13B F13C F21A F21B F21C
	06	G12A G12B G16A G38A G38B
	08	I02A I02B I02C I12A I12B I12C I22Z I28A I28B I28C I32C I32D I32E I32F I50Z
	09	J02A J02B J03A J03B J04Z J08Z J10A J10B J21Z J22Z
	12	M09A M09B M37Z
	21B	X01A X01B X04Z X05Z X06A X06B X06C X07A X07B
	22	Y02A Y02B Y02C
	Prä	B61B B61C B61D
86.7E.2D↔		BORP MBOR VAC VAC I VAC II VB VBOR
	01	B17A B17B
	04	E36A E36B
	05	F04Z F13A F13B F13C F21A F21B F21C
	06	G12A G12B G16A G38A G38B
	08	I02A I02B I02C I12A I12B I12C I22Z I28A I28B I28C I32C I50Z
	09	J02A J02B J03A J03B J04Z J08Z J10A J10B J21Z J22Z
	12	M09A M09B M37Z
	21B	X01A X01B X04Z X05Z X06A X06B X06C X07A X07B
	22	Y02A Y02B Y02C
	Prä	B61B B61C B61D
86.7E.2E↔		BORP MBOR VAC VAC I VAC II VB VBOR
	01	B17A B17B
	03	D12A D12B
	04	E36A E36B
	05	F04Z F13A F13B F13C F21A F21B F21C
	06	G12A G12B G16A G38A G38B
	08	I02A I02B I02C I12A I12B I12C I22Z I28A I28B I28C I32C I50Z
	09	J02A J02B J03A J03B J04Z J08Z J10A J10B J21Z J22Z
	12	M09A M09B M37Z
	21B	X01A X01B X04Z X05Z X06A X06B X06C X07A X07B
	22	Y02A Y02B Y02C
	Prä	B61B B61C B61D
86.7E.31↔		BORP MBOR VAC VAC I VAC II VB VBOR

CHOP	MDC	DRG
	01	B17A B17B
	03	D12A D12B
	04	E36A E36B
	05	F04Z F13A F13B F13C F21A F21B F21C
	06	G12A G12B G16A G38A G38B
	08	I02A I02B I02C I12A I12B I12C I22Z I28A I28B I28C I32C I50Z
	09	J02A J02B J03A J03B J04Z J08Z J10A J10B J21Z J22Z
	12	M09A M09B M37Z
	21B	X01A X01B X04Z X05Z X06A X06B X06C X07A X07B
	22	Y02A Y02B Y02C
	Prä	B61B B61C B61D
86.7E.36↔		BORP MBOR VAC VAC I VAC II VB VBOR
	01	B17A B17B
	04	E36A E36B
	05	F04Z F13A F13B F13C F21A F21B F21C
	06	G12A G12B G16A G38A G38B
	08	I02A I02B I02C I12A I12B I12C I22Z I28A I28B I28C I32A I32B I32C I32D I32E I32F I50Z
	09	J02A J02B J03A J03B J04Z J08Z J10A J10B J21Z J22Z
	12	M09A M09B M37Z
	21B	X01A X01B X04Z X05Z X06A X06B X06C X07A X07B
	22	Y02A Y02B Y02C
	Prä	B61B B61C B61D
86.7E.3D↔		BORP MBOR VAC VAC I VAC II VB VBOR
	01	B17A B17B
	04	E36A E36B
	05	F04Z F13A F13B F13C F21A F21B F21C
	06	G12A G12B G16A G38A G38B
	08	I02A I02B I02C I12A I12B I12C I22Z I28A I28B I28C I32C I50Z
	09	J02A J02B J03A J03B J04Z J08Z J10A J10B J21Z J22Z
	12	M09A M09B M37Z
	21B	X01A X01B X04Z X05Z X06A X06B X06C X07A X07B
	22	Y02A Y02B Y02C
	Prä	B61B B61C B61D
86.7E.3E↔		BORP MBOR VAC VAC I VAC II VB VBOR
	01	B17A B17B
	03	D12A D12B
	04	E36A E36B
	05	F04Z F13A F13B F13C F21A F21B F21C
	06	G12A G12B G16A G38A G38B
	08	I02A I02B I02C I12A I12B I12C I22Z I28A I28B I28C I32C I50Z
	09	J02A J02B J03A J03B J04Z J08Z J10A J10B J21Z J22Z
	12	M09A M09B M37Z
	21B	X01A X01B X04Z X05Z X06A X06B X06C X07A X07B
	22	Y02A Y02B Y02C
	Prä	B61B B61C B61D
86.7E.41↔		BORP MBOR VAC VAC I VAC II VB VBOR
	01	B17A B17B
	03	D12A D12B
	04	E36A E36B
	05	F04Z F13A F13B F13C F21A F21B F21C
	06	G12A G12B G16A G38A G38B
	08	I02A I02B I02C I12A I12B I12C I22Z I28A I28B I28C I32C I50Z
	09	J02A J02B J03A J03B J04Z J08Z J10A J10B J21Z J22Z
	12	M09A M09B M37Z
	21B	X01A X01B X04Z X05Z X06A X06B X06C X07A X07B
	22	Y02A Y02B Y02C
	Prä	B61B B61C B61D
86.7E.46↔		BORP MBOR VAC VAC I VAC II VB VBOR
	01	B17A B17B
	04	E36A E36B
	05	F04Z F13A F13B F13C F21A F21B F21C
	06	G12A G12B G16A G38A G38B
	08	I02A I02B I02C I12A I12B I12C I22Z I28A I28B I28C I32A I32B I32C I32D I32E I32F I50Z
	09	J02A J02B J03A J03B J04Z J08Z J10A J10B J21Z J22Z
	12	M09A M09B M37Z
	21B	X01A X01B X04Z X05Z X06A X06B X06C X07A X07B
	22	Y02A Y02B Y02C
	Prä	B61B B61C B61D
86.7E.4D↔		BORP MBOR VAC VAC I VAC II VB VBOR
	01	B17A B17B
	04	E36A E36B
	05	F04Z F13A F13B F13C F21A F21B F21C
	06	G12A G12B G16A G38A G38B
	08	I02A I02B I02C I12A I12B I12C I22Z I28A I28B I28C I32C I50Z
	09	J02A J02B J03A J03B J04Z J08Z J10A J10B J21Z J22Z
	12	M09A M09B M37Z
	21B	X01A X01B X04Z X05Z X06A X06B X06C X07A X07B
	22	Y02A Y02B Y02C
	Prä	B61B B61C B61D
86.7E.4E↔		BORP MBOR VAC VAC I VAC II VB VBOR
	01	B17A B17B
	03	D12A D12B
	04	E36A E36B
	05	F04Z F13A F13B F13C F21A F21B F21C
	06	G12A G12B G16A G38A G38B
	08	I02A I02B I02C I12A I12B I12C I22Z I28A I28B I28C I32C I50Z
	09	J02A J02B J03A J03B J04Z J08Z J10A J10B J21Z J22Z
	12	M09A M09B M37Z
	21B	X01A X01B X04Z X05Z X06A X06B X06C X07A X07B
	22	Y02A Y02B Y02C
	Prä	B61B B61C B61D
86.81↔		BORP MBOR VAC VAC I VAC II VBOR
	03	D12A
	04	E36A E36B
	06	G12A G16A G38A G38B
	09	J02A J02B J03A J03B J04Z J10A J10B
	10	K09A K09B
	12	M09A M09B M37Z
	21B	X06A X06B
86.82↔		BORP MBOR VAC

PROC

PROC

CHOP	MDC	DRG
		VAC I VAC II VBOR
	01	B09A B09B B09C B09D
	03	D12A
	04	E36A E36B
	06	G12A G16A G38A G38B
	09	J02A J02B J03A J03B J04Z J10A J10B
	10	K09A K09B
	12	M09A M09B M37Z
	21B	X06A X06B
86.83.11↔		BORP MBOR VAC
		VAC I VAC II VBOR
	01	B17A B17B
	03	D08Z D12A D22Z D25A D25B D30A D30B D30C
	04	E36A E36B
	06	G12A G16A G38A G38B
	09	J02A J02B J03A J03B J04Z J10A J10B
	10	K09A K09B
	12	M09A M09B M37Z
	21B	X04Z X05Z X06A X06B X06C
86.83.12↔		BORP MBOR VAC
		VAC I VAC II VBOR
	01	B17A B17B
	03	D12A
	04	E36A E36B
	06	G12A G16A G38A G38B
	09	J02A J02B J03A J03B J04Z J10A J10B
	10	K09A K09B
	12	M09A M09B M37Z
	21B	X04Z X05Z X06A X06B X06C
86.83.13↔		BORP MBOR VAC
		VAC I VAC II VBOR
	01	B17A B17B
	03	D12A
	04	E36A E36B
	06	G12A G16A G38A G38B
	09	J02A J02B J03A J03B J04Z J10A J10B J11A J11B
	10	K09A K09B
	12	M09A M09B M37Z
	21B	X04Z X05Z X06A X06B X06C
86.83.14↔		BORP MBOR VAC
		VAC I VAC II VBOR
	01	B17A B17B
	03	D12A
	04	E36A E36B
	06	G12A G16A G38A G38B
	09	J02A J02B J03A J03B J04Z J10A J10B J11A J11B
	10	K09A K09B
	12	M09A M09B M37Z
	21B	X04Z X05Z X06A X06B X06C
86.83.1A↔		BORP MBOR VAC
		VAC I VAC II VBOR
	01	B17A B17B
	03	D12A
	04	E36A E36B
	06	G09C G12A G16A G38A G38B
	09	J02A J02B J03A J03B J04Z J10A J10B
	10	K09A K09B
	12	M09A M09B M37Z
	21B	X04Z X05Z X06A X06B X06C
86.83.1B↔		BORP MBOR VAC
		VAC I VAC II VBOR
	01	B17A B17B
	03	D12A
	04	E36A E36B
	06	G12A G16A G38A G38B
	09	J02A J02B J03A J03B J04Z J10A J10B
	10	K09A K09B
	12	M09A M09B M37Z
	21B	X04Z X05Z X06A X06B X06C
86.83.1C↔		BORP MBOR VAC
		VAC I VAC II VBOR
	01	B17A B17B
	03	D12A
	04	E36A E36B
	06	G12A G16A G38A G38B
	09	J02A J02B J03A J03B J04Z J10A J10B
	10	K09A K09B
	12	M09A M09B M37Z
	21B	X04Z X05Z X06A X06B X06C
86.83.1D↔		BORP MBOR VAC
		VAC I VAC II VBOR
	01	B17A B17B
	03	D12A
	04	E36A E36B
	06	G12A G16A G38A G38B
	09	J02A J02B J03A J03B J04Z J10A J10B
	10	K09A K09B
	12	M09A M09B M37Z
	21B	X04Z X05Z X06A X06B X06C
86.83.1E↔		BORP MBOR VAC
		VAC I VAC II VBOR
	01	B17A B17B
	03	D12A
	04	E36A E36B
	06	G12A G16A G38A G38B
	09	J02A J02B J03A J03B J04Z J10A J10B
	10	K09A K09B
	12	M09A M09B M37Z
	21B	X04Z X05Z X06A X06B X06C
86.83.1F↔		BORP MBOR VAC
		VAC I VAC II VBOR
	01	B17A B17B
	03	D12A
	04	E36A E36B
	06	G12A G16A G38A G38B
	09	J02A J02B J03A J03B J04Z J10A J10B
	10	K09A K09B
	12	M09A M09B M37Z
	21B	X04Z X05Z X06A X06B X06C
86.83.1G↔		BORP MBOR VAC
		VAC I VAC II VBOR
	01	B17A B17B
	03	D12A
	04	E36A E36B
	06	G12A G16A G38A G38B
	09	J02A J02B J03A J03B J04Z J10A J10B
	10	K09A K09B
	12	M09A M09B M37Z
	21B	X04Z X05Z X06A X06B X06C
86.84.21↔	01	B17A B17B
	03	D12A D12B
	04	E02A E02B E02C
	05	F21A F21B F21C
	06	G12A G12B
	07	H06Z
	08	I27A I27B I27C I27D
	09	J11A J11B
	10	K09A K09B
	11	L09A L09B
	12	M06Z M09A M09B M37Z
	13	N11A N11B
	21B	X06A X06B X06C
86.84.26↔	01	B17A B17B
	03	D12A D12B
	04	E02A E02B E02C
	05	F21A F21B F21C
	06	G12A G12B
	07	H06Z
	08	I27A I27B I27C I27D
	09	J11A J11B
	10	K09A K09B
	11	L09A L09B
	12	M06Z M09A M09B M37Z
	13	N11A N11B
	21B	X06A X06B X06C
86.84.2D↔	01	B17A B17B
	03	D12A D12B
	04	E02A E02B E02C
	05	F21A F21B F21C
	06	G12A G12B
	07	H06Z
	08	I27A I27B I27C I27D
	09	J11A J11B
	10	K09A K09B
	11	L09A L09B
	12	M06Z M09A M09B

CHOP	MDC	DRG
		M37Z
	13	N11A N11B
	21B	X06A X06B X06C
86.84.2E↔	01	B17A B17B
	03	D12A D12B
	04	E02A E02B E02C
	05	F21A F21B F21C
	06	G12A G12B
	07	H06Z
	08	I27A I27B I27C I27D
	09	J11A J11B
	10	K09A K09B
	11	L09A L09B
	12	M06Z M09A M09B M37Z
	13	N11A N11B
	21B	X06A X06B X06C
86.85.30↔		BORP MBOR VAC VAC I VAC II VBOR
	04	E36A E36B
	06	G12A G16A G38A G38B
	08	I02A I02B I02C I20A I20B I20C I32A I32B I32C I32D I32E I32F
	09	J02A J02B J03A J03B J04Z J10A J10B
	12	M09A M09B M37Z
	21B	X05Z
86.85.40↔		BORP MBOR VAC VAC I VAC II VBOR
	04	E36A E36B
	06	G12A G16A G38A G38B
	08	I20A I20B I20C I20D I20G
	09	J02A J02B J03A J03B J04Z J10A J10B
	12	M09A M09B M37Z
	21B	X05Z
86.85.50↔		BORP MBOR VAC VAC I VAC II VBOR
	04	E36A E36B
	06	G12A G16A G38A G38B
	08	I02A I02B I02C I20A I20B I20C I32A I32B I32C I32D I32E I32F
	09	J02A J02B J03A J03B J04Z J10A J10B
	12	M09A M09B M37Z
	21B	X05Z
86.85.60↔		BORP MBOR VAC VAC I VAC II VBOR
	04	E36A E36B
	06	G12A G16A G38A G38B
	08	I20A I20B I20C I20D I20G
	09	J02A J02B J03A J03B J04Z J10A J10B
	12	M09A M09B M37Z
	21B	X05Z
86.85.70↔		BORP MBOR VAC VAC I VAC II VBOR
	04	E36A E36B
	06	G12A G16A G38A G38B
	08	I02A I02B I02C I20A I20B I20C I32A I32B I32C I32D I32E I32F
	09	J02A J02B J03A J03B J04Z J10A J10B
	12	M09A M09B M37Z
	21B	X05Z
86.85.80↔		BORP MBOR VAC VAC I VAC II VBOR
	04	E36A E36B
	06	G12A G16A G38A G38B
	08	I20A I20B I20C I20D I20G
	09	J02A J02B J03A J03B J04Z J10A J10B
	12	M09A M09B M37Z
	21B	X05Z
86.88.D1↔		BORP MBOR VAC VAC I VAC II VB VBOR
	04	E36A E36B
	05	F04Z F13A F13B F21A F21B F21C
	06	G12A G16A G38A G38B
	08	I28A I28B I28C I32C
	09	J02A J02B J04Z J08Z J21Z J22Z
	12	M09A M09B M37Z
	21B	X01A X01B X06A X06B X06C X07A X07B
	22	Y02A Y02B Y02C
86.88.D6↔		BORP MBOR VAC VAC I VAC II VB VBOR
	04	E36A E36B
	05	F04Z F13A F13B F21A F21B F21C
	06	G12A G16A G38A G38B
	08	I02A I02B I02C I28A I28B I28C I32A I32B I32C I32D I32E I32F
	09	J02A J02B J04Z J08Z J21Z J22Z
	12	M09A M09B M37Z
	21B	X01A X01B X06A X06B X06C X07A X07B
	22	Y02A Y02B Y02C
86.88.DD↔		BORP MBOR VAC VAC I VAC II VB VBOR
	04	E36A E36B
	05	F04Z F13A F13B F21A F21B F21C
	06	G12A G16A G38A G38B
	08	I28A I28B I28C I32C
	09	J02A J02B J04Z J08Z J21Z J22Z
	12	M09A M09B M37Z
	21B	X01A X01B X06A X06B X06C X07A X07B
	22	Y02A Y02B Y02C
86.88.DE↔		BORP MBOR VAC VAC I VAC II VB VBOR
	04	E36A E36B
	05	F04Z F13A F13B F21A F21B F21C
	06	G12A G16A G38A G38B
	08	I28A I28B I28C I32C
	09	J02A J02B J04Z J08Z J21Z J22Z
	12	M09A M09B M37Z
	21B	X01A X01B X06A X06B X06C X07A X07B
	22	Y02A Y02B Y02C
86.88.F1↔		BORP MBOR VAC VAC I VAC II VB VBOR
	04	E36A E36B
	05	F04Z F13A F13B F21A F21B F21C
	06	G12A G16A G38A G38B
	08	I28A I28B I28C I32C
	09	J02A J02B J04Z J08Z J21Z J22Z
	12	M09A M09B M37Z
	21B	X01A X01B X06A X06B X06C X07A X07B
	22	Y02A Y02B Y02C
86.88.F6↔		BORP MBOR VAC VAC I VAC II VB VBOR
	04	E36A E36B
	05	F04Z F13A F13B F21A F21B F21C
	06	G12A G16A G38A G38B
	08	I02A I02B I02C I28A I28B I28C I32A I32B I32C I32D I32E I32F
	09	J02A J02B J04Z J08Z J21Z J22Z
	12	M09A M09B M37Z
	21B	X01A X01B X06A X06B X06C X07A X07B
	22	Y02A Y02B Y02C
86.88.FD↔		BORP MBOR VAC VAC I VAC II VB VBOR
	04	E36A E36B
	05	F04Z F13A F13B F21A F21B F21C
	06	G12A G16A G38A G38B

PROC

CHOP	MDC	DRG
	08	I28A I28B I28C I32C
	09	J02A J02B J04Z J08Z J21Z J22Z
	12	M09A M09B M37Z
	21B	X01A X01B X06A X06B X06C X07A X07B
	22	Y02A Y02B Y02C
86.88.FE↔		BORP MBOR VAC VAC I VAC II VB VBOR
	04	E36A E36B
	05	F04Z F13A F13B F21A F21B F21C
	06	G12A G16A G38A G38B
	08	I28A I28B I28C I32C
	09	J02A J02B J04Z J08Z J21Z J22Z
	12	M09A M09B M37Z
	21B	X01A X01B X06A X06B X06C X07A X07B
	22	Y02A Y02B Y02C
86.88.H1↔		BORP MBOR VAC VAC I VAC II VB VBOR
	04	E36A E36B
	05	F04Z F13A F13B F21A F21B F21C
	06	G12A G16A G38A G38B
	08	I28A I28B I28C I32C
	09	J02A J02B J04Z J08Z J21Z J22Z
	12	M09A M09B M37Z
	21B	X01A X01B X06A X06B X06C X07A X07B
	22	Y02A Y02B Y02C
86.88.H6↔		BORP MBOR VAC VAC I VAC II VB VBOR
	04	E36A E36B
	05	F04Z F13A F13B F21A F21B F21C
	06	G12A G16A G38A G38B
	08	I02A I02B I02C I28A I28B I28C I32A I32B I32C I32D I32E I32F
	09	J02A J02B J04Z J08Z J21Z J22Z
	12	M09A M09B M37Z
	21B	X01A X01B X06A X06B X06C X07A X07B
	22	Y02A Y02B Y02C
86.88.HD↔		BORP MBOR VAC VAC I VAC II VB VBOR
	04	E36A E36B
	05	F04Z F13A F13B F21A F21B F21C
	06	G12A G16A G38A G38B

CHOP	MDC	DRG
	08	I28A I28B I28C I32C
	09	J02A J02B J04Z J08Z J21Z J22Z
	12	M09A M09B M37Z
	21B	X01A X01B X06A X06B X06C X07A X07B
	22	Y02A Y02B Y02C
86.88.HE↔		BORP MBOR VAC VAC I VAC II VB VBOR
	04	E36A E36B
	05	F04Z F13A F13B F21A F21B F21C
	06	G12A G16A G38A G38B
	08	I28A I28B I28C I32C
	09	J02A J02B J04Z J08Z J21Z J22Z
	12	M09A M09B M37Z
	21B	X01A X01B X06A X06B X06C X07A X07B
	22	Y02A Y02B Y02C
86.88.I1↔		VAC VAC I VAC II VBOR
	01	B17A
	03	D12A D12B
	04	E02A E02B E02C
	05	F21A F21B F21C
	06	G12A G12B
	07	H06Z
	08	I28A I28B
	09	J11A J11B
	10	K09A K09B
	11	L09A L09B
	12	M06Z M09A M09B M37Z
	13	N11A N11B
	21A	W01A W01B W01C W01D
	21B	X06A X06B X06C
	22	Y02A Y02B Y02C
86.88.I2↔		VAC VAC I VAC II VBOR
	01	B17A
	03	D12A D12B
	04	E02A E02B E02C
	05	F21A F21B F21C
	06	G12A G12B
	07	H06Z
	08	I28A I28B
	09	J11A J11B
	10	K09A K09B
	11	L09A L09B
	12	M06Z M09A M09B M37Z
	13	N11A N11B
	21A	W01A W01B W01C W01D
	21B	X06A X06B X06C
	22	Y02A Y02B Y02C
86.88.I3↔		VAC VAC I VAC II VBOR
	01	B17A
	03	D12A D12B
	04	E02A E02B E02C
	05	F21A F21B F21C

CHOP	MDC	DRG
	06	G12A G12B
	07	H06Z
	08	I28A I28B
	09	J11A J11B
	10	K09A K09B
	11	L09A L09B
	12	M06Z M09A M09B M37Z
	13	N11A N11B
	21A	W01A W01B W01C W01D
	21B	X06A X06B X06C
	22	Y02A Y02B Y02C
86.88.I4↔		VAC VAC I VAC II VBOR
	01	B17A
	03	D12A D12B
	04	E02A E02B E02C
	05	F21A F21B F21C
	06	G12A G12B
	07	H06Z
	08	I28A I28B
	09	J11A J11B
	10	K09A K09B
	11	L09A L09B
	12	M06Z M09A M09B M37Z
	13	N11A N11B
	21A	W01A W01B W01C W01D
	21B	X06A X06B X06C
	22	Y02A Y02B Y02C
86.88.I5↔		VAC VAC I VAC II VBOR
	01	B17A
	03	D12A D12B
	04	E02A E02B E02C
	05	F21A F21B F21C
	06	G12A G12B
	07	H06Z
	08	I28A I28B
	09	J11A J11B
	10	K09A K09B
	11	L09A L09B
	12	M06Z M09A M09B M37Z
	13	N11A N11B
	21A	W01A W01B W01C W01D
	21B	X06A X06B X06C
	22	Y02A Y02B Y02C
86.88.I6↔		VAC VAC I VAC II VBOR
	01	B17A
	03	D12A D12B
	04	E02A E02B E02C
	05	F21A F21B F21C
	06	G12A G12B
	07	H06Z
	08	I28A I28B
	09	J11A J11B
	10	K09A K09B
	11	L09A L09B
	12	M06Z M09A M09B M37Z
	13	N11A N11B
	21A	W01A W01B W01C W01D
	21B	X06A X06B X06C
	22	Y02A Y02B Y02C

CHOP	MDC	DRG
86.88.I7↔		VAC VAC I VAC II VBOR
	01	B17A
	03	D12A D12B
	04	E02A E02B E02C
	05	F21A F21B F21C
	06	G12A G12B
	07	H06Z
	08	I28A I28B
	09	J11A J11B
	10	K09A K09B
	11	L09A L09B
	12	M06Z M09A M09B M37Z
	13	N11A N11B
	21A	W01A W01B W01C W01D
	21B	X06A X06B X06C
	22	Y02A Y02B Y02C
86.88.I8↔		VAC VAC I VAC II VBOR
	01	B17A
	03	D12A D12B
	04	E02A E02B E02C
	05	F21A F21B F21C
	06	G12A G12B
	07	H06Z
	08	I28A I28B
	09	J11A J11B
	10	K09A K09B
	11	L09A L09B
	12	M06Z M09A M09B M37Z
	13	N11A N11B
	21A	W01A W01B W01C W01D
	21B	X06A X06B X06C
	22	Y02A Y02B Y02C
86.8A.11↔		BORP MBOR VAC VAC I VAC II VB VBOR
	04	E36A E36B
	05	F04Z F13A F13B F21A F21B F21C
	06	G12A G16A G38A G38B
	08	I28A I28B I28C I32C
	09	J02A J02B J04Z J08Z J21Z J22Z
	12	M09A M09B M37Z
	21B	X01A X01B X06A X06B X06C X07A X07B
	22	Y02A Y02B Y02C
86.8A.16↔		BORP MBOR VAC VAC I VAC II VB VBOR
	04	E36A E36B
	05	F04Z F13A F13B F21A F21B F21C
	06	G12A G16A G38A G38B
	08	I02A I02B I02C I28A I28B I28C I32A I32B I32C I32D I32E I32F
	09	J02A J02B J04Z J08Z J21Z J22Z
	12	M09A M09B M37Z
	21B	X01A X01B X06A X06B X06C X07A X07B
	22	Y02A Y02B Y02C
86.8A.1D↔		BORP MBOR VAC VAC I VAC II VB VBOR
	04	E36A E36B
	05	F04Z F13A F13B F21A F21B F21C
	06	G12A G16A G38A G38B
	08	I28A I28B I28C I32C
	09	J02A J02B J04Z J08Z J21Z J22Z
	12	M09A M09B M37Z
	21B	X01A X01B X06A X06B X06C X07A X07B
	22	Y02A Y02B Y02C
86.8A.1E↔		BORP MBOR VAC VAC I VAC II VB VBOR
	04	E36A E36B
	05	F04Z F13A F13B F21A F21B F21C
	06	G12A G16A G38A G38B
	08	I28A I28B I28C I32C
	09	J02A J02B J04Z J08Z J21Z J22Z
	12	M09A M09B M37Z
	21B	X01A X01B X06A X06B X06C X07A X07B
	22	Y02A Y02B Y02C
86.8A.21↔		BORP MBOR VAC VAC I VAC II VB VBOR
	04	E36A E36B
	05	F04Z F13A F13B F21A F21B F21C
	06	G12A G16A G38A G38B
	08	I28A I28B I28C I32C
	09	J02A J02B J04Z J08Z J21Z J22Z
	12	M09A M09B M37Z
	21B	X01A X01B X06A X06B X06C X07A X07B
	22	Y02A Y02B Y02C
86.8A.26↔		BORP MBOR VAC VAC I VAC II VB VBOR
	04	E36A E36B
	05	F04Z F13A F13B F21A F21B F21C
	06	G12A G16A G38A G38B
	08	I02A I02B I02C I28A I28B I28C I32A I32B I32C I32D I32E I32F
	09	J02A J02B J04Z J08Z J21Z J22Z
	12	M09A M09B M37Z
	21B	X01A X01B X06A X06B X06C X07A X07B
	22	Y02A Y02B Y02C
86.8A.2D↔		BORP MBOR VAC VAC I VAC II VB VBOR
	04	E36A E36B
	05	F04Z F13A F13B F21A F21B F21C
	06	G12A G16A G38A G38B
	08	I28A I28B I28C I32C
	09	J02A J02B J04Z J08Z J21Z J22Z
	12	M09A M09B M37Z
	21B	X01A X01B X06A X06B X06C X07A X07B
	22	Y02A Y02B Y02C
86.8A.2E↔		BORP MBOR VAC VAC I VAC II VB VBOR
	04	E36A E36B
	05	F04Z F13A F13B F21A F21B F21C
	06	G12A G16A G38A G38B
	08	I28A I28B I28C I32C
	09	J02A J02B J04Z J08Z J21Z J22Z
	12	M09A M09B M37Z
	21B	X01A X01B X06A X06B X06C X07A X07B
	22	Y02A Y02B Y02C
86.8A.31↔		BORP MBOR VAC VAC I VAC II VB VBOR
	04	E36A E36B
	05	F04Z F13A F13B F21A F21B F21C
	06	G12A G16A G38A G38B
	08	I28A I28B I28C I32C
	09	J02A J02B J04Z J08Z J21Z J22Z
	12	M09A M09B M37Z
	21B	X01A X01B X06A X06B X06C X07A X07B
	22	Y02A Y02B Y02C
86.8A.36↔		BORP MBOR VAC VAC I VAC II VB VBOR
	04	E36A E36B
	05	F04Z F13A F13B F21A F21B F21C
	06	G12A G16A G38A G38B
	08	I02A I02B I02C I28A I28B I28C I32A I32B I32C I32D I32E I32F
	09	J02A J02B J04Z J08Z J21Z J22Z
	12	M09A M09B M37Z

PROC

CHOP	MDC	DRG
	21B	X01A X01B X06A X06B X06C X07A X07B
	22	Y02A Y02B Y02C
86.8A.3D↔		BORP MBOR VAC VAC I VAC II VB VBOR
	04	E36A E36B
	05	F04Z F13A F13B F21A F21B F21C
	06	G12A G16A G38A G38B
	08	I28A I28B I28C I32C
	09	J02A J02B J04Z J08Z J21Z J22Z
	12	M09A M09B M37Z
	21B	X01A X01B X06A X06B X06C X07A X07B
	22	Y02A Y02B Y02C
86.8A.3E↔		BORP MBOR VAC VAC I VAC II VB VBOR
	04	E36A E36B
	05	F04Z F13A F13B F21A F21B F21C
	06	G12A G16A G38A G38B
	08	I28A I28B I28C I32C
	09	J02A J02B J04Z J08Z J21Z J22Z
	12	M09A M09B M37Z
	21B	X01A X01B X06A X06B X06C X07A X07B
	22	Y02A Y02B Y02C
86.8A.41↔		BORP MBOR VAC VAC I VAC II VB VBOR
	04	E36A E36B
	05	F04Z F13A F13B F21A F21B F21C
	06	G12A G16A G38A G38B
	08	I28A I28B I28C I32C
	09	J02A J02B J04Z J08Z J21Z J22Z
	12	M09A M09B M37Z
	21B	X01A X01B X06A X06B X06C X07A X07B
	22	Y02A Y02B Y02C
86.8A.46↔		BORP MBOR VAC VAC I VAC II VB VBOR
	04	E36A E36B
	05	F04Z F13A F13B F21A F21B F21C
	06	G12A G16A G38A G38B
	08	I02A I02B I02C I28A I28B I28C I32A I32B I32C I32D I32E I32F
	09	J02A J02B J04Z J08Z J21Z J22Z
	12	M09A M09B M37Z

CHOP	MDC	DRG
	21B	X01A X01B X06A X06B X06C X07A X07B
	22	Y02A Y02B Y02C
86.8A.4D↔		BORP MBOR VAC VAC I VAC II VB VBOR
	04	E36A E36B
	05	F04Z F13A F13B F21A F21B F21C
	06	G12A G16A G38A G38B
	08	I28A I28B I28C I32C
	09	J02A J02B J04Z J08Z J21Z J22Z
	12	M09A M09B M37Z
	21B	X01A X01B X06A X06B X06C X07A X07B
	22	Y02A Y02B Y02C
86.8A.4E↔		BORP MBOR VAC VAC I VAC II VB VBOR
	04	E36A E36B
	05	F04Z F13A F13B F21A F21B F21C
	06	G12A G16A G38A G38B
	08	I28A I28B I28C I32C
	09	J02A J02B J04Z J08Z J21Z J22Z
	12	M09A M09B M37Z
	21B	X01A X01B X06A X06B X06C X07A X07B
	22	Y02A Y02B Y02C
86.91↔		BORP MBOR VAC VAC I VAC II VBOR
	01	B17A B17B
	03	D12A D12B
	04	E36A E36B
	05	F04Z F13A F13B F13C F21A F21B F21C
	06	G12A G16A G38A G38B
	08	I02A I02B I02C I12A I12B I12C
	09	J02A J02B J04Z J08Z J21Z J22Z
	12	M09A M09B M37Z
	21B	X04Z X05Z X06A X06B X06C
	22	Y02A Y02B Y02C
	Prä	B61B B61C B61D
86.93.09↔		BORP MBOR VAC VAC I VAC II VB VBOR
	01	B17A B17B
	03	D12A
	04	E36A E36B
	05	F21A F21B F21C
	06	G12A G16A G38A G38B
	08	I28A I28B I28C
	09	J02A J02B J04Z J08Z J21Z J22Z
	12	M09A M09B M37Z

CHOP	MDC	DRG
	21B	X01A X01B X06A X06B X06C X07A X07B
	22	Y02A Y02B Y02C
86.93.21↔		BORP MBOR VAC VAC I VAC II VB VBOR
	01	B17A B17B
	03	D12A
	04	E36A E36B
	05	F21A F21B F21C
	06	G12A G16A G38A G38B
	08	I28A I28B I28C
	09	J02A J02B J04Z J08Z J21Z J22Z
	12	M09A M09B M37Z
	21B	X01A X01B X06A X06B X06C X07A X07B
	22	Y02A Y02B Y02C
86.93.26↔		BORP MBOR VAC VAC I VAC II VB VBOR
	01	B17A B17B
	03	D12A
	04	E36A E36B
	05	F21A F21B F21C
	06	G12A G16A G38A G38B
	08	I28A I28B I28C
	09	J02A J02B J04Z J08Z J21Z J22Z
	12	M09A M09B M37Z
	21B	X01A X01B X06A X06B X06C X07A X07B
	22	Y02A Y02B Y02C
86.93.2D↔		BORP MBOR VAC VAC I VAC II VB VBOR
	01	B17A B17B
	03	D12A
	04	E36A E36B
	05	F21A F21B F21C
	06	G12A G16A G38A G38B
	08	I28A I28B I28C
	09	J02A J02B J04Z J08Z J21Z J22Z
	12	M09A M09B M37Z
	21B	X01A X01B X06A X06B X06C X07A X07B
	22	Y02A Y02B Y02C
86.93.2E↔		BORP MBOR VAC VAC I VAC II VB VBOR
	01	B17A B17B
	03	D12A
	04	E36A E36B
	05	F21A F21B F21C
	06	G12A G16A G38A G38B
	08	I28A I28B I28C
	09	J02A J02B J04Z J08Z J21Z J22Z
	12	M09A M09B M37Z
	21B	X01A X01B X06A X06B X06C X07A

CHOP	MDC	DRG
		X07B
	22	Y02A Y02B Y02C
86.A1.12‡↔	01	B60A
	08	I02A I02B I02C
		I32A I32B
	09	J02A J02B J11A
		J11B
	22	Y02A Y02B Y02C
		Y62A
86.A2.00‡↔	01	B60A
	08	I02A I02B I02C
		I32A I32B
	09	J02A J02B J11A
		J11B
	22	Y02A Y02B Y02C
		Y62A
86.A2.09‡↔	01	B60A
	08	I02A I02B I02C
		I32A I32B
	09	J02A J02B J11A
		J11B
	22	Y02A Y02B Y02C
		Y62A
86.A2.21↔		BORP MBOR VAC
		VAC I VAC II VB
		VBOR
	04	E36A E36B
	05	F04Z F13A F13B
		F21A F21B F21C
	06	G12A G16A G38A
		G38B
	08	I28A I28B I28C
		I32C
	09	J02A J02B J04Z
		J08Z J21Z J22Z
	12	M09A M09B M37Z
	21B	X01A X01B X06A
		X06B X06C X07A
		X07B
	22	Y02A Y02B Y02C
86.A2.26↔		BORP MBOR VAC
		VAC I VAC II VB
		VBOR
	04	E36A E36B
	05	F04Z F13A F13B
		F21A F21B F21C
	06	G12A G16A G38A
		G38B
	08	I02A I02B I02C
		I28A I28B I28C
		I32A I32B I32C
		I32D I32E I32F
	09	J02A J02B J04Z
		J08Z J21Z J22Z
	12	M09A M09B M37Z
	21B	X01A X01B X06A
		X06B X06C X07A
		X07B
	22	Y02A Y02B Y02C
86.A2.2D↔		BORP MBOR VAC
		VAC I VAC II VB
		VBOR
	04	E36A E36B
	05	F04Z F13A F13B
		F21A F21B F21C
	06	G12A G16A G38A
		G38B
	08	I28A I28B I28C
		I32C
	09	J02A J02B J04Z
		J08Z J21Z J22Z
	12	M09A M09B M37Z
	21B	X01A X01B X06A
		X06B X06C X07A
		X07B
	22	Y02A Y02B Y02C
86.A2.2E↔		BORP MBOR VAC
		VAC I VAC II VB
		VBOR
	04	E36A E36B
	05	F04Z F13A F13B
		F21A F21B F21C
	06	G12A G16A G38A
		G38B
	08	I28A I28B I28C
		I32C
	09	J02A J02B J04Z
		J08Z J21Z J22Z
	12	M09A M09B M37Z
	21B	X01A X01B X06A
		X06B X06C X07A
		X07B
	22	Y02A Y02B Y02C
88.43‡↔	01	B60A
	05	F03C F03D F04Z
		F06A F06B F06C
		F41A F41B F49A
		F49B F49C F49D
		F49E F49F F61A
88.50‡↔	01	B60A
	05	F03C F03D F04Z
		F06A F06B F06C
		F41A F41B F49A
		F49B F49C F49D
		F49E F49F F61A
88.51‡↔	01	B60A
	05	F75A F75B F75C
		F75D
88.52‡↔	01	B60A
	05	F03C F03D F04Z
		F06A F06B F06C
		F41A F41B F49A
		F49B F49C F49D
		F49E F49F F61A
88.53‡↔	01	B60A
	05	F03C F03D F04Z
		F06A F06B F06C
		F41A F41B F49A
		F49B F49C F49D
		F49E F49F F61A
88.54‡↔	01	B60A
	05	F03C F03D F04Z
		F06A F06B F06C
		F41A F41B F49A
		F49B F49C F49D
		F49E F49F F61A
88.55‡↔	01	B60A
	05	F03C F03D F04Z
		F06A F06B F06C
		F41A F41B F49A
		F49B F49C F49D
		F49E F49F F61A
88.56‡↔	01	B60A
	05	F03C F03D F04Z
		F06A F06B F06C
		F41A F41B F49A
		F49B F49C F49D
		F49E F49F F61A
88.57‡↔	01	B60A
	05	F03C F03D F04Z
		F06A F06B F06C
		F41A F41B F49A
		F49B F49C F49D
		F49E F49F F61A
88.72.21‡↔	01	B60A
	15	P67C
88.73.20‡↔	01	B60A
	04	E86A
89.07.11‡↔	01	B60A
	05	F49A F49B F49C
		F62A F62B
89.07.12‡↔	01	B60A
	04	E60A
	08	I66A
89.07.13‡↔	01	B60A
	04	E60A
	08	I66A
89.07.14‡↔	01	B60A
	07	H61A H63A H63C
		H63D H86A
89.07.15‡↔	01	B60A
	10	K60B
89.07.31‡↔	01	B60A
	05	F49A F49B F49C
		F62A F62B
89.07.32‡↔	01	B60A
	04	E60A
	08	I66A
89.07.33‡↔	01	B60A
	04	E60A
	08	I66A
89.07.34‡↔	01	B60A
	07	H61A H63A H63C
		H63D H86A
89.07.35‡↔	01	B60A
	10	K60B
89.07.41‡↔	01	B60A
	05	F49A F49B F49C
		F62A F62B
89.07.42‡↔	01	B60A
	04	E60A
	08	I66A
89.07.43‡↔	01	B60A
	04	E60A
	08	I66A
89.07.44‡↔	01	B60A
	07	H61A H63A H63C
		H63D H86A
89.07.52‡↔	01	B60A
	05	F49A F49B F49C
		F62A F62B
89.07.53‡↔	01	B60A
	04	E60A
	08	I66A
89.07.54‡↔	01	B60A
	04	E60A
	08	I66A
89.07.55‡↔	01	B60A
	07	H61A H63A H63C
		H63D H86A
89.0A.42‡↔	Prä	A95F
	01	B60A
	04	E77A E77B
89.0A.43‡↔	Prä	A95F
	01	B60A
	04	E77A E77B
89.0A.44‡↔	Prä	A95F
	01	B60A
	04	E77A E77B
89.14.11‡↔	01	B60A B76F B76G

PROC

CHOP	MDC	DRG
89.14.12‡↔	01	B60A B76F B76G
89.17.10‡↔	01	B60A
	04	E63A E63B
89.17.11‡↔	01	B60A
	04	E63A E63B
89.19.00‡↔	01	B60A B76F B76G
89.19.09‡↔	01	B60A B76F B76G
89.19.11‡↔	01	B60A B76F B76G
89.19.12‡↔	01	B60A B76F B76G
		B86A
89.19.13‡↔	01	B60A B76A B76B
		B76C B76D B76E
		B76F B76G B76H
89.19.14‡↔	01	B60A B76A B76B
		B76C B76D B76E
		B76F B76G B76H
89.19.15‡↔	01	B60A B76A B76B
		B76C B76D B76E
		B76F B76G B76H
89.19.21‡↔	01	B01A B01B B60A
		B76A B76B B76C
		B76D B76E B76F
		B76G B76H
89.19.30‡↔	01	B60A B76F B76G
89.19.40‡↔	01	B60A B76F B76G
89.1A.11‡↔	01	B60A B67A B67B
89.93‡↔		AKBB
	01	B60A
92.05.00‡↔	01	B60A
	05	F49A F49C
92.05.09‡↔	01	B60A
	05	F49A F49C
92.05.11‡↔	01	B60A
	05	F74A
92.05.12‡↔	01	B60A
	05	F74A
92.05.13‡↔	01	B60A
	05	F74A
92.05.14‡↔	01	B60A
	05	F74A
92.05.19‡↔	01	B60A
	05	F74A
92.18.04‡↔	01	B60A
	10	K64B
92.19.00‡↔		AKBB
	01	B60A
92.19.01‡↔		AKBB
	01	B60A
92.19.02‡↔		AKBB
	01	B60A
92.19.03‡↔		AKBB
	01	B60A
92.19.04‡↔		AKBB
	01	B60A
92.19.05‡↔		AKBB
	01	B60A
92.19.06‡↔		AKBB
	01	B60A
92.20↔		BORP KP KPP
	01	B01A B02A B02B
		B16Z
	02	C29Z
	03	D12A D15A D15B
		D20Z D25A D25B
	04	E01A E01B E08A
		E08B E36A E36B
		E86A
	06	G16A G16B G29A
		G29B G38A G38B
	07	H01A H01B H01C
		H16Z H33Z
	08	I54A I54B
	09	J02A J18A J18B
	10	K15A
	11	L12Z
	12	M10Z M37Z
	13	N16Z N33Z
	17	R50A
	Prä	A11A A36A A90A
		A90B A93A A93B
		A93C
92.21.00↔		BORP
	01	B01A B02A B02B
		B16Z
	02	C29Z
	03	D12A D15A D15B
		D20Z D25A D25B
	04	E01A E01B E08A
		E08B E36A E36B
		E86A
	06	G16A G16B G29A
		G29B G38A G38B
	07	H01A H01B H01C
		H16Z H33Z
	08	I54A I54B
	09	J02A J18A J18B
	10	K15A
	11	L12Z
	12	M10Z M37Z
	13	N16Z N33Z
	17	R50A
	Prä	A11A A36A A90A
		A90B A93A A93B
		A93C
92.21.01↔		BORP KP KPP
	01	B01A B02A B02B
		B16Z
	02	C29Z
	03	D12A D15A D15B
		D20Z D25A D25B
	04	E01A E01B E08A
		E08B E36A E36B
		E86A
	06	G16A G16B G29A
		G29B G38A G38B
	07	H01A H01B H01C
		H16Z H33Z
	08	I54A I54B
	09	J02A J18A J18B
	10	K15A
	11	L12Z
	12	M10Z M37Z
	13	N16Z N33Z
	17	R50A
	Prä	A11A A36A A90A
		A90B A93A A93B
		A93C
92.21.02↔		BORP KP KPP
	01	B01A B02A B02B
		B16Z
	02	C29Z
	03	D12A D15A D15B
		D20Z D25A D25B
	04	E01A E01B E08A
		E08B E36A E36B
		E86A
	06	G16A G16B G29A
		G29B G38A G38B
	07	H01A H01B H01C
		H16Z H33Z
	08	I54A I54B
	09	J02A J18A J18B
	10	K15A
	11	L12Z
	12	M10Z M37Z
	13	N16Z N33Z
	17	R50A
	Prä	A11A A36A A90A
		A90B A93A A93B
		A93C
92.22.00↔		BORP
	01	B01A B02A B02B
		B16Z
	02	C29Z
	03	D12A D15A D15B
		D20Z D25A D25B
	04	E01A E01B E08A
		E08B E36A E36B
		E86A
	06	G16A G16B G29A
		G29B G38A G38B
	07	H01A H01B H01C
		H16Z H33Z
	08	I54A I54B
	09	J02A J18A J18B
	10	K15A
	11	L12Z
	12	M10Z M37Z
	13	N16Z N33Z
	17	R50A
	Prä	A11A A36A A90A
		A90B A93A A93B
		A93C
92.22.01↔		BORP KP KPP
	01	B01A B02A B02B
		B16Z
	02	C29Z
	03	D12A D15A D15B
		D20Z D25A D25B
	04	E01A E01B E08A
		E08B E36A E36B
		E86A
	06	G16A G16B G29A
		G29B G38A G38B
	07	H01A H01B H01C
		H16Z H33Z
	08	I54A I54B
	09	J02A J18A J18B
	10	K15A
	11	L12Z
	12	M10Z M37Z
	13	N16Z N33Z
	17	R50A
	Prä	A11A A36A A90A
		A90B A93A A93B
		A93C
92.22.02↔		BORP KP KPP
	01	B01A B02A B02B
		B16Z
	02	C29Z
	03	D12A D15A D15B
		D20Z D25A D25B
	04	E01A E01B E08A
		E08B E36A E36B
		E86A
	06	G16A G16B G29A
		G29B G38A G38B
	07	H01A H01B H01C
		H16Z H33Z
	08	I54A I54B
	09	J02A J18A J18B
	10	K15A
	11	L12Z
	12	M10Z M37Z

CHOP	MDC	DRG
	13	N16Z N33Z
	17	R50A
	Prä	A11A A36A A90A A90B A93A A93B A93C
92.22.11↔		BORP KP KPP
	01	B01A B02A B02B B16Z
	02	C29Z
	03	D12A D15A D15B D20Z D25A D25B
	04	E01A E01B E08A E08B E36A E36B E86A
	06	G16A G16B G29A G29B G37Z G38A G38B
	07	H01A H01B H01C H16Z H33Z
	08	I54A I54B
	09	J02A J18A J18B
	10	K15A
	11	L12Z
	12	M10Z M37Z
	13	N16Z N33Z
	17	R50A
	Prä	A11A A36A A90A A90B A93A A93B A93C
92.22.12↔		BORP KP KPP
	01	B01A B02A B02B B16Z
	02	C29Z
	03	D12A D15A D15B D20Z D25A D25B
	04	E01A E01B E08A E08B E36A E36B E86A
	06	G16A G16B G29A G29B G37Z G38A G38B
	07	H01A H01B H01C H16Z H33Z
	08	I54A I54B
	09	J02A J18A J18B
	10	K15A
	11	L12Z
	12	M10Z M37Z
	13	N16Z N33Z
	17	R50A
	Prä	A11A A36A A90A A90B A93A A93B A93C
92.22.19↔		BORP KP KPP
	01	B01A B02A B02B B16Z
	02	C29Z
	03	D12A D15A D15B D20Z D25A D25B
	04	E01A E01B E08A E08B E36A E36B E86A
	06	G16A G16B G29A G29B G37Z G38A G38B
	07	H01A H01B H01C H16Z H33Z
	08	I54A I54B
	09	J02A J18A J18B
	10	K15A

CHOP	MDC	DRG
	11	L12Z
	12	M10Z M37Z
	13	N16Z N33Z
	17	R50A
	Prä	A11A A36A A90A A90B A93A A93B A93C
92.23.00↔		BORP
	01	B01A B02A B02B B16Z
	02	C29Z
	03	D12A D15A D15B D20Z D25A D25B
	04	E01A E01B E08A E08B E36A E36B E86A
	06	G16A G16B G29A G29B G38A G38B
	07	H01A H01B H01C H16Z H33Z
	08	I54A I54B
	09	J02A J18A J18B
	10	K15A
	11	L12Z
	12	M10Z M37Z
	13	N16Z N33Z
	17	R50A
	Prä	A11A A36A A90A A90B A93A A93B A93C
92.23.01↔		BORP KP KPP
	01	B01A B02A B02B B16Z
	02	C29Z
	03	D12A D15A D15B D20Z D25A D25B
	04	E01A E01B E08A E08B E36A E36B E86A
	06	G16A G16B G29A G29B G38A G38B
	07	H01A H01B H01C H16Z H33Z
	08	I54A I54B
	09	J02A J18A J18B
	10	K15A
	11	L12Z
	12	M10Z M37Z
	13	N16Z N33Z
	17	R50A
	Prä	A11A A36A A90A A90B A93A A93B A93C
92.23.02↔		BORP KP KPP
	01	B01A B02A B02B B16Z
	02	C29Z
	03	D12A D15A D15B D20Z D25A D25B
	04	E01A E01B E08A E08B E36A E36B E86A
	06	G16A G16B G29A G29B G38A G38B
	07	H01A H01B H01C H16Z H33Z
	08	I54A I54B
	09	J02A J18A J18B
	10	K15A
	11	L12Z

CHOP	MDC	DRG
	12	M10Z M37Z
	13	N16Z N33Z
	17	R50A
	Prä	A11A A36A A90A A90B A93A A93B A93C
92.23.03↔		BORP KP KPP
	01	B01A B02A B02B B16Z
	02	C29Z
	03	D12A D15A D15B D20Z D25A D25B
	04	E01A E01B E08A E08B E36A E36B E86A
	06	G16A G16B G29A G29B G38A G38B
	07	H01A H01B H01C H16Z H33Z
	08	I54A I54B
	09	J02A J18A J18B
	10	K15A
	11	L12Z
	12	M10Z M37Z
	13	N16Z N33Z
	17	R50A
	Prä	A11A A36A A90A A90B A93A A93B A93C
92.23.08↔		BORP KP KPP
	01	B01A B02A B02B B16Z
	02	C29Z
	03	D12A D15A D15B D20Z D25A D25B
	04	E01A E01B E08A E08B E36A E36B E86A
	06	G16A G16B G29A G29B G38A G38B
	07	H01A H01B H01C H16Z H33Z
	08	I54A I54B
	09	J02A J18A J18B
	10	K15A
	11	L12Z
	12	M10Z M37Z
	13	N16Z N33Z
	17	R50A
	Prä	A11A A36A A90A A90B A93A A93B A93C
92.23.09↔		BORP KP KPP
	01	B01A B02A B02B B16Z
	02	C29Z
	03	D12A D15A D15B D20Z D25A D25B
	04	E01A E01B E08A E08B E36A E36B E86A
	06	G16A G16B G29A G29B G38A G38B
	07	H01A H01B H01C H16Z H33Z
	08	I54A I54B
	09	J02A J18A J18B
	10	K15A
	11	L12Z
	12	M10Z M37Z

PROC

CHOP	MDC	DRG
	13	N16Z N33Z
	17	R50A
	Prä	A11A A36A A90A A90B A93A A93B A93C
92.24.00↔		BORP
	01	B01A B02A B02B B16Z
	02	C29Z
	03	D12A D15A D15B D20Z D25A D25B
	04	E01A E01B E08A E08B E36A E36B E86A
	06	G16A G16B G29A G29B G38A G38B
	07	H01A H01B H01C H16Z H33Z
	08	I54A I54B
	09	J02A J18A J18B
	10	K15A
	11	L12Z
	12	M10Z M37Z
	13	N16Z N33Z
	17	R50A
	Prä	A11A A36A A90A A90B A93A A93B A93C
92.24.01↔		BORP KP KPP
	01	B01A B02A B02B B16Z
	02	C29Z
	03	D12A D15A D15B D20Z D25A D25B
	04	E01A E01B E08A E08B E36A E36B E86A
	06	G16A G16B G29A G29B G38A G38B
	07	H01A H01B H01C H16Z H33Z
	08	I54A I54B
	09	J02A J18A J18B
	10	K15A
	11	L12Z
	12	M10Z M37Z
	13	N16Z N33Z
	17	R50A
	Prä	A11A A36A A90A A90B A93A A93B A93C
92.24.02↔		BORP KP KPP
	01	B01A B02A B02B B16Z
	02	C29Z
	03	D12A D15A D15B D20Z D25A D25B
	04	E01A E01B E08A E08B E36A E36B E86A
	06	G16A G16B G29A G29B G38A G38B
	07	H01A H01B H01C H16Z H33Z
	08	I54A I54B
	09	J02A J18A J18B
	10	K15A
	11	L12Z
	12	M10Z M37Z
	13	N16Z N33Z
	17	R50A
	21A	W01A W01B W01C
	21B	X06A X06B X06C
	Prä	A11A A36A A90A A90B A93A A93B A93C
92.24.03↔		BORP KP KPP
	01	B01A B02A B02B B16Z
	02	C29Z
	03	D12A D15A D15B D20Z D25A D25B
	04	E01A E01B E08A E08B E36A E36B E86A
	06	G16A G16B G29A G29B G38A G38B
	07	H01A H01B H01C H16Z H33Z
	08	I54A I54B
	09	J02A J18A J18B
	10	K15A
	11	L12Z
	12	M10Z M37Z
	13	N16Z N33Z
	17	R50A
	21A	W01A W01B W01C
	21B	X06A X06B X06C
	Prä	A11A A36A A90A A90B A93A A93B A93C
92.24.04↔		BORP KP KPP
	01	B01A B02A B02B B16Z
	02	C29Z
	03	D12A D15A D15B D20Z D25A D25B
	04	E01A E01B E08A E08B E36A E36B E86A
	06	G16A G16B G29A G29B G37Z G38A G38B
	07	H01A H01B H01C H16Z H33Z
	08	I54A I54B
	09	J02A J18A J18B
	10	K15A
	11	L12Z
	12	M10Z M37Z
	13	N16Z N33Z
	17	R50A
	Prä	A11A A36A A90A A90B A93A A93B A93C
92.24.09↔		BORP KP KPP
	01	B01A B02A B02B B16Z
	02	C29Z
	03	D12A D15A D15B D20Z D25A D25B
	04	E01A E01B E08A E08B E36A E36B E86A
	06	G16A G16B G29A G29B G38A G38B
	07	H01A H01B H01C H16Z H33Z
	08	I54A I54B
	09	J02A J18A J18B
	10	K15A
	11	L12Z
	12	M10Z M37Z
	13	N16Z N33Z
	17	R50A
	Prä	A11A A36A A90A A90B A93A A93B A93C
92.24.11↔		BORP KP KPP
	01	B01A B02A B02B B16Z
	02	C29Z
	03	D12A D15A D15B D20Z D25A D25B
	04	E01A E01B E08A E08B E36A E36B E86A
	06	G16A G16B G29A G29B G38A G38B
	07	H01A H01B H01C H16Z H33Z
	08	I54A I54B
	09	J02A J18A J18B
	10	K15A
	11	L12Z
	12	M10Z M37Z
	13	N16Z N33Z
	17	R50A
	Prä	A11A A36A A90A A90B A93A A93B A93C
92.24.12↔		BORP KP KPP
	01	B01A B02A B02B B16Z
	02	C29Z
	03	D12A D15A D15B D20Z D25A D25B
	04	E01A E01B E08A E08B E36A E36B E86A
	06	G16A G16B G29A G29B G38A G38B
	07	H01A H01B H01C H16Z H33Z
	08	I54A I54B
	09	J02A J18A J18B
	10	K15A
	11	L12Z
	12	M10Z M37Z
	13	N16Z N33Z
	17	R50A
	Prä	A11A A36A A90A A90B A93A A93B A93C
92.24.13↔		BORP KP KPP
	01	B01A B02A B02B B16Z
	02	C29Z
	03	D12A D15A D15B D20Z D25A D25B
	04	E01A E01B E08A E08B E36A E36B E86A
	06	G16A G16B G29A G29B G38A G38B
	07	H01A H01B H01C H16Z H33Z
	08	I54A I54B
	09	J02A J18A J18B
	10	K15A

CHOP	MDC	DRG
	11	L12Z
	12	M10Z M37Z
	13	N16Z N33Z
	17	R50A
	Prä	A11A A36A A90A A90B A93A A93B A93C
92.24.14↔		BORP KP KPP
	01	B01A B02A B02B B16Z
	02	C29Z
	03	D12A D15A D15B D20Z D25A D25B
	04	E01A E01B E08A E08B E36A E36B E86A
	06	G16A G16B G29A G29B G38A G38B
	07	H01A H01B H01C H16Z H33Z
	08	I54A I54B
	09	J02A J18A J18B
	10	K15A
	11	L12Z
	12	M10Z M37Z
	13	N16Z N33Z
	17	R50A
	Prä	A11A A36A A90A A90B A93A A93B A93C
92.24.21↔		BORP KP KPP
	01	B01A B02A B02B B16Z
	02	C29Z
	03	D12A D15A D15B D20Z D25A D25B
	04	E01A E01B E08A E08B E36A E36B E86A
	06	G16A G16B G29A G29B G38A G38B
	07	H01A H01B H01C H16Z H33Z
	08	I54A I54B
	09	J02A J18A J18B
	10	K15A
	11	L12Z
	12	M10Z M37Z
	13	N16Z N33Z
	17	R50A
	Prä	A11A A36A A90A A90B A93A A93B A93C
92.24.22↔		BORP KP KPP
	01	B01A B02A B02B B16Z
	02	C29Z
	03	D12A D15A D15B D20Z D25A D25B
	04	E01A E01B E08A E08B E36A E36B E86A
	06	G16A G16B G29A G29B G38A G38B
	07	H01A H01B H01C H16Z H33Z
	08	I54A I54B
	09	J02A J18A J18B
	10	K15A
	11	L12Z
	12	M10Z M37Z
	13	N16Z N33Z
	17	R50A
	Prä	A11A A36A A90A A90B A93A A93B A93C
92.24.23↔		BORP KP KPP
	01	B01A B02A B02B B16Z
	02	C29Z
	03	D12A D15A D15B D20Z D25A D25B
	04	E01A E01B E08A E08B E36A E36B E86A
	06	G16A G16B G29A G29B G38A G38B
	07	H01A H01B H01C H16Z H33Z
	08	I54A I54B
	09	J02A J18A J18B
	10	K15A
	11	L12Z
	12	M10Z M37Z
	13	N16Z N33Z
	17	R50A
	Prä	A11A A36A A90A A90B A93A A93B A93C
92.24.24↔		BORP KP KPP
	01	B01A B02A B02B B16Z
	02	C29Z
	03	D12A D15A D15B D20Z D25A D25B
	04	E01A E01B E08A E08B E36A E36B E86A
	06	G16A G16B G29A G29B G38A G38B
	07	H01A H01B H01C H16Z H33Z
	08	I54A I54B
	09	J02A J18A J18B
	10	K15A
	11	L12Z
	12	M10Z M37Z
	13	N16Z N33Z
	17	R50A
	Prä	A11A A36A A90A A90B A93A A93B A93C
92.24.30↔		BORP KP KPP
	01	B01A B02A B02B B16Z
	02	C29Z
	03	D12A D15A D15B D20Z D25A D25B
	04	E01A E01B E08A E08B E36A E36B E86A
	06	G16A G16B G29A G29B G38A G38B
	07	H01A H01B H01C H16Z H33Z
	08	I54A I54B
	09	J02A J18A J18B
	10	K15A
	11	L12Z
	12	M10Z M37Z
	13	N16Z N33Z
	17	R50A
	Prä	A11A A36A A90A A90B A93A A93B A93C
92.25.00↔		BORP
	01	B01A B02A B02B B16Z
	02	C29Z
	03	D12A D15A D15B D20Z D25A D25B
	04	E01A E01B E08A E08B E36A E36B E86A
	06	G16A G16B G29A G29B G38A G38B
	07	H01A H01B H01C H16Z H33Z
	08	I54A I54B
	09	J02A J18A J18B
	10	K15A
	11	L12Z
	12	M10Z M37Z
	13	N16Z N33Z
	17	R50A
	Prä	A11A A36A A90A A90B A93A A93B A93C
92.25.01↔		BORP KP KPP
	01	B01A B02A B02B B16Z
	02	C29Z
	03	D12A D15A D15B D20Z D25A D25B
	04	E01A E01B E08A E08B E36A E36B E86A
	06	G16A G16B G29A G29B G38A G38B
	07	H01A H01B H01C H16Z H33Z
	08	I54A I54B
	09	J02A J18A J18B
	10	K15A
	11	L12Z
	12	M10Z M37Z
	13	N16Z N33Z
	17	R50A
	Prä	A11A A36A A90A A90B A93A A93B A93C
92.25.02↔		BORP KP KPP
	01	B01A B02A B02B B16Z
	02	C29Z
	03	D12A D15A D15B D20Z D25A D25B
	04	E01A E01B E08A E08B E36A E36B E86A
	06	G16A G16B G29A G29B G38A G38B
	07	H01A H01B H01C H16Z H33Z
	08	I54A I54B
	09	J02A J18A J18B
	10	K15A
	11	L12Z
	12	M10Z M37Z
	13	N16Z N33Z

PROC

CHOP	MDC	DRG
	17	R50A
	21A	W01A W01B W01C
	21B	X06A X06B X06C
	Prä	A11A A36A A90A A90B A93A A93B A93C
92.25.03↔		BORP KP KPP
	01	B01A B02A B02B B16Z
	02	C29Z
	03	D12A D15A D15B D20Z D25A D25B
	04	E01A E01B E08A E08B E36A E36B E86A
	06	G16A G16B G29A G29B G38A G38B
	07	H01A H01B H01C H16Z H33Z
	08	I54A I54B
	09	J02A J18A J18B
	10	K15A
	11	L12Z
	12	M10Z M37Z
	13	N16Z N33Z
	17	R50A
	21A	W01A W01B W01C
	21B	X06A X06B X06C
	Prä	A11A A36A A90A A90B A93A A93B A93C
92.25.04↔		BORP KP KPP
	01	B01A B02A B02B B16Z
	02	C29Z
	03	D12A D15A D15B D20Z D25A D25B
	04	E01A E01B E08A E08B E36A E36B E86A
	06	G16A G16B G29A G29B G38A G38B
	07	H01A H01B H01C H16Z H33Z
	08	I54A I54B
	09	J02A J18A J18B
	10	K15A
	11	L12Z
	12	M10Z M37Z
	13	N16Z N33Z
	17	R50A
	Prä	A11A A36A A90A A90B A93A A93B A93C
92.25.09↔		BORP KP KPP
	01	B01A B02A B02B B16Z
	02	C29Z
	03	D12A D15A D15B D20Z D25A D25B
	04	E01A E01B E08A E08B E36A E36B E86A
	06	G16A G16B G29A G29B G38A G38B
	07	H01A H01B H01C H16Z H33Z
	08	I54A I54B
	09	J02A J18A J18B
	10	K15A
	11	L12Z
	12	M10Z M37Z
	13	N16Z N33Z
	17	R50A
	Prä	A11A A36A A90A A90B A93A A93B A93C
92.25.11↔		BORP KP KPP
	01	B01A B02A B02B B16Z
	02	C29Z
	03	D12A D15A D15B D20Z D25A D25B
	04	E01A E01B E08A E08B E36A E36B E86A
	06	G16A G16B G29A G29B G38A G38B
	07	H01A H01B H01C H16Z H33Z
	08	I54A I54B
	09	J02A J18A J18B
	10	K15A
	11	L12Z
	12	M10Z M37Z
	13	N16Z N33Z
	17	R50A
	Prä	A11A A36A A90A A90B A93A A93B A93C
92.25.12↔		BORP KP KPP
	01	B01A B02A B02B B16Z
	02	C29Z
	03	D12A D15A D15B D20Z D25A D25B
	04	E01A E01B E08A E08B E36A E36B E86A
	06	G16A G16B G29A G29B G38A G38B
	07	H01A H01B H01C H16Z H33Z
	08	I54A I54B
	09	J02A J18A J18B
	10	K15A
	11	L12Z
	12	M10Z M37Z
	13	N16Z N33Z
	17	R50A
	Prä	A11A A36A A90A A90B A93A A93B A93C
92.25.13↔		BORP KP KPP
	01	B01A B02A B02B B16Z
	02	C29Z
	03	D12A D15A D15B D20Z D25A D25B
	04	E01A E01B E08A E08B E36A E36B E86A
	06	G16A G16B G29A G29B G38A G38B
	07	H01A H01B H01C H16Z H33Z
	08	I54A I54B
	09	J02A J18A J18B
	10	K15A
	11	L12Z
	12	M10Z M37Z
	13	N16Z N33Z
	17	R50A
	Prä	A11A A36A A90A A90B A93A A93B A93C
92.25.14↔		BORP KP KPP
	01	B01A B02A B02B B16Z
	02	C29Z
	03	D12A D15A D15B D20Z D25A D25B
	04	E01A E01B E08A E08B E36A E36B E86A
	06	G16A G16B G29A G29B G38A G38B
	07	H01A H01B H01C H16Z H33Z
	08	I54A I54B
	09	J02A J18A J18B
	10	K15A
	11	L12Z
	12	M10Z M37Z
	13	N16Z N33Z
	17	R50A
	Prä	A11A A36A A90A A90B A93A A93B A93C
92.25.15↔		BORP KP KPP
	01	B01A B02A B02B B16Z
	02	C29Z
	03	D12A D15A D15B D20Z D25A D25B
	04	E01A E01B E08A E08B E36A E36B E86A
	06	G16A G16B G29A G29B G38A G38B
	07	H01A H01B H01C H16Z H33Z
	08	I54A I54B
	09	J02A J18A J18B
	10	K15A
	11	L12Z
	12	M10Z M37Z
	13	N16Z N33Z
	17	R50A
	Prä	A11A A36A A90A A90B A93A A93B A93C
92.25.21↔		BORP KP KPP
	01	B01A B02A B02B B16Z
	02	C29Z
	03	D12A D15A D15B D20Z D25A D25B
	04	E01A E01B E08A E08B E36A E36B E86A
	06	G16A G16B G29A G29B G38A G38B
	07	H01A H01B H01C H16Z H33Z
	08	I54A I54B
	09	J02A J18A J18B
	10	K15A
	11	L12Z
	12	M10Z M37Z

CHOP	MDC	DRG
	13	N16Z N33Z
	17	R50A
	Prä	A11A A36A A90A A90B A93A A93B A93C
92.25.22↔		BORP KP KPP
	01	B01A B02A B02B B16Z
	02	C29Z
	03	D12A D15A D15B D20Z D25A D25B
	04	E01A E01B E08A E08B E36A E36B E86A
	06	G16A G16B G29A G29B G38A G38B
	07	H01A H01B H01C H16Z H33Z
	08	I54A I54B
	09	J02A J18A J18B
	10	K15A
	11	L12Z
	12	M10Z M37Z
	13	N16Z N33Z
	17	R50A
	Prä	A11A A36A A90A A90B A93A A93B A93C
92.25.23↔		BORP KP KPP
	01	B01A B02A B02B B16Z
	02	C29Z
	03	D12A D15A D15B D20Z D25A D25B
	04	E01A E01B E08A E08B E36A E36B E86A
	06	G16A G16B G29A G29B G38A G38B
	07	H01A H01B H01C H16Z H33Z
	08	I54A I54B
	09	J02A J18A J18B
	10	K15A
	11	L12Z
	12	M10Z M37Z
	13	N16Z N33Z
	17	R50A
	Prä	A11A A36A A90A A90B A93A A93B A93C
92.25.24↔		BORP KP KPP
	01	B01A B02A B02B B16Z
	02	C29Z
	03	D12A D15A D15B D20Z D25A D25B
	04	E01A E01B E08A E08B E36A E36B E86A
	06	G16A G16B G29A G29B G38A G38B
	07	H01A H01B H01C H16Z H33Z
	08	I54A I54B
	09	J02A J18A J18B
	10	K15A
	11	L12Z
	12	M10Z M37Z
	13	N16Z N33Z

CHOP	MDC	DRG
	17	R50A
	Prä	A11A A36A A90A A90B A93A A93B A93C
92.26.00↔		BORP
	01	B01A B02A B02B B16Z
	02	C29Z
	03	D12A D15A D15B D20Z D25A D25B
	04	E01A E01B E08A E08B E36A E36B E86A
	06	G16A G16B G29A G29B G38A G38B
	07	H01A H01B H01C H16Z H33Z
	08	I54A I54B
	09	J02A J18A J18B
	10	K15A
	11	L12Z
	12	M10Z M37Z
	13	N16Z N33Z
	17	R50A
	Prä	A11A A36A A90A A90B A93A A93B A93C
92.26.99↔		BORP KP KPP
	01	B01A B02A B02B B16Z
	02	C29Z
	03	D12A D15A D15B D20Z D25A D25B
	04	E01A E01B E08A E08B E36A E36B E86A
	06	G16A G16B G29A G29B G38A G38B
	07	H01A H01B H01C H16Z H33Z
	08	I54A I54B
	09	J02A J18A J18B
	10	K15A
	11	L12Z
	12	M10Z M37Z
	13	N16Z N33Z
	17	R50A
	Prä	A11A A36A A90A A90B A93A A93B A93C
92.27.00↔		BORP KPP
	01	B01A B02A B02B B16Z B17A B17B
	02	C29Z
	03	D12A D15A D15B D20Z D25A D25B
	04	E01A E01B E08A E08B E36A E36B E86A
	06	G12A G12B G16A G16B G29A G29B G38A G38B
	07	H01A H01B H01C H16Z H33Z
	08	I54A I54B
	09	J02A J02B J03A J03B J04Z J11A J11B J18A J18B
	10	K15A
	11	L12Z

CHOP	MDC	DRG
	12	M10Z M37Z
	13	N16Z N33Z
	21B	X04Z X05Z X06A X06B X06C
	Prä	A11A
92.27.10↔		BORP
	01	B01A B02A B02B B16Z B17A B17B
	02	C29Z
	03	D12A D15A D15B D20Z D25A D25B
	04	E01A E01B E08A E08B E36A E36B E86A
	06	G12A G12B G16A G16B G29A G29B G38A G38B
	07	H01A H01B H01C H16Z H33Z
	08	I54A I54B
	09	J02A J02B J03A J03B J04Z J11A J11B J18A J18B
	10	K15A
	11	L12Z
	12	M10Z M37Z
	13	N16Z N33Z
	21B	X04Z X05Z X06A X06B X06C
	Prä	A11A
92.27.11↔		BORP KP KPP
	01	B01A B02A B02B B16Z B17A B17B
	02	C29Z
	03	D12A D15A D15B D20Z D25A D25B
	04	E01A E01B E08A E08B E36A E36B E86A
	06	G12A G12B G16A G16B G29A G29B G38A G38B
	07	H01A H01B H01C H16Z H33Z
	08	I54A I54B
	09	J02A J02B J03A J03B J04Z J11A J11B J18A J18B
	10	K15A
	11	L12Z
	12	M10Z M37Z
	13	N16Z N33Z
	21B	X04Z X05Z X06A X06B X06C
	Prä	A11A
92.27.12↔		BORP KP KPP
	01	B01A B02A B02B B16Z B17A B17B
	02	C29Z
	03	D12A D15A D15B D20Z D25A D25B
	04	E01A E01B E08A E08B E36A E36B E86A
	06	G12A G12B G16A G16B G29A G29B G38A G38B
	07	H01A H01B H01C H16Z H33Z
	08	I54A I54B

PROC

CHOP	MDC	DRG
	09	J02A J02B J03A
		J03B J04Z J11A
		J11B J18A J18B
	10	K15A
	11	L12Z
	12	M10Z M37Z
	13	N16Z N33Z
	21B	X04Z X05Z X06A
		X06B X06C
	Prä	A11A
92.27.13↔		BORP KP KPP
	01	B01A B02A B02B
		B16Z B17A B17B
	02	C29Z
	03	D12A D15A D15B
		D20Z D25A D25B
	04	E01A E01B E08A
		E08B E36A E36B
		E86A
	06	G12A G12B G16A
		G16B G29A G29B
		G38A G38B
	07	H01A H01B H01C
		H16Z H33Z
	08	I54A I54B
	09	J02A J02B J03A
		J03B J04Z J11A
		J11B J18A J18B
	10	K15A
	11	L12Z
	12	M10Z M37Z
	13	N16Z N33Z
	21B	X04Z X05Z X06A
		X06B X06C
	Prä	A11A
92.27.21↔		BORP KP KPP
	01	B01A B02A B02B
		B16Z B17A B17B
	02	C29Z
	03	D12A D15A D15B
		D20Z D25A D25B
	04	E01A E01B E08A
		E08B E36A E36B
		E86A
	06	G12A G12B G16A
		G16B G29A G29B
		G38A G38B
	07	H01A H01B H01C
		H16Z H33Z
	08	I54A I54B
	09	J02A J02B J03A
		J03B J04Z J11A
		J11B J18A J18B
	10	K15A
	11	L12Z
	12	M10Z M37Z
	13	N16Z N33Z
	21B	X04Z X05Z X06A
		X06B X06C
	Prä	A11A
92.27.22↔		BORP KP KPP
	01	B01A B02A B02B
		B16Z B17A B17B
	02	C29Z
	03	D12A D15A D15B
		D20Z D25A D25B
	04	E01A E01B E08A
		E08B E36A E36B
		E86A
	06	G12A G12B G16A
		G16B G29A G29B
		G38A G38B
	07	H01A H01B H01C
		H16Z H33Z
	08	I54A I54B
	09	J02A J02B J03A
		J03B J04Z J11A
		J11B J18A J18B
	10	K15A
	11	L12Z
	12	M10Z M37Z
	13	N16Z N33Z
	21B	X04Z X05Z X06A
		X06B X06C
	Prä	A11A
92.27.23↔		BORP KP KPP
	01	B01A B02A B02B
		B16Z B17A B17B
	02	C29Z
	03	D12A D15A D15B
		D20Z D25A D25B
	04	E01A E01B E08A
		E08B E36A E36B
		E86A
	06	G12A G12B G16A
		G16B G29A G29B
		G38A G38B
	07	H01A H01B H01C
		H16Z H33Z
	08	I54A I54B
	09	J02A J02B J03A
		J03B J04Z J11A
		J11B J18A J18B
	10	K15A
	11	L12Z
	12	M10Z M37Z
	13	N16Z N33Z
	21B	X04Z X05Z X06A
		X06B X06C
	Prä	A11A
92.27.30↔		BORP
	01	B01A B02A B02B
		B16Z B17A B17B
	02	C29Z
	03	D12A D15A D15B
		D20Z D25A D25B
	04	E01A E01B E08A
		E08B E36A E36B
		E86A
	06	G12A G12B G16A
		G16B G29A G29B
		G38A G38B
	07	H01A H01B H01C
		H16Z H33Z
	08	I54A I54B
	09	J02A J02B J03A
		J03B J04Z J11A
		J11B J18A J18B
	10	K15A
	11	L12Z
	12	M10Z M37Z
	13	N16Z N33Z
	21B	X04Z X05Z X06A
		X06B X06C
	Prä	A11A
92.27.31↔		BORP KP KPP
	01	B01A B02A B02B
		B16Z B17A B17B
	02	C29Z
	03	D12A D15A D15B
		D20Z D25A D25B
	04	E01A E01B E08A
		E08B E36A E36B
		E86A
	06	G12A G12B G16A
		G16B G29A G29B
		G38A G38B
	07	H01A H01B H01C
		H16Z H33Z
	08	I54A I54B
	09	J02A J02B J03A
		J03B J04Z J11A
		J11B J18A J18B
	10	K15A
	11	L12Z
	12	M10Z M37Z
	13	N16Z N33Z
	21B	X04Z X05Z X06A
		X06B X06C
	Prä	A11A
92.27.39↔		BORP KP KPP
	01	B01A B02A B02B
		B16Z B17A B17B
	02	C29Z
	03	D12A D15A D15B
		D20Z D25A D25B
	04	E01A E01B E08A
		E08B E36A E36B
		E86A
	06	G12A G12B G16A
		G16B G29A G29B
		G38A G38B
	07	H01A H01B H01C
		H16Z H33Z
	08	I54A I54B
	09	J02A J02B J03A
		J03B J04Z J11A
		J11B J18A J18B
	10	K15A
	11	L12Z
	12	M10Z M37Z
	13	N16Z N33Z
	21B	X04Z X05Z X06A
		X06B X06C
	Prä	A11A
92.27.40↔		BORP KP KPP
	01	B01A B02A B02B
		B16Z B17A B17B
	02	C29Z
	03	D12A D15A D15B
		D20Z D25A D25B
	04	E01A E01B E08A
		E08B E36A E36B
		E86A
	06	G12A G12B G16A
		G16B G29A G29B
		G37Z G38A G38B
	07	H01A H01B H01C
		H16Z H33Z
	08	I54A I54B
	09	J02A J02B J03A
		J03B J04Z J06A
		J11A J11B J18A
		J18B
	10	K15A
	11	L12Z
	12	M10Z M37Z
	13	N16Z N33Z
	17	R01A R01B
	21B	X04Z X05Z X06A

CHOP	MDC	DRG
		X06B X06C
	Prä	A11A A97A A97B
		A97C A97D
92.27.70↔		BORP
	01	B01A B02A B02B
		B16Z B17A B17B
	02	C29Z
	03	D12A D15A D15B
		D20Z D25A D25B
	04	E01A E01B E08A
		E08B E36A E36B
		E86A
	06	G12A G12B G16A
		G16B G29A G29B
		G38A G38B
	07	H01A H01B H01C
		H16Z H33Z
	08	I54A I54B
	09	J02A J02B J03A
		J03B J04Z J11A
		J11B J18A J18B
	10	K15A
	11	L12Z
	12	M10Z M37Z
	13	N16Z N33Z
	21B	X04Z X05Z X06A
		X06B X06C
	Prä	A11A
92.27.71↔		BORP KP KPP
	01	B01A B02A B02B
		B16Z B17A B17B
	02	C29Z
	03	D12A D15A D15B
		D20Z D25A D25B
	04	E01A E01B E08A
		E08B E36A E36B
		E86A
	06	G12A G12B G16A
		G16B G29A G29B
		G38A G38B
	07	H01A H01B H01C
		H16Z H33Z
	08	I54A I54B
	09	J02A J02B J03A
		J03B J04Z J11A
		J11B J18A J18B
	10	K15A
	11	L12Z
	12	M10Z M37Z
	13	N16Z N33Z
	21B	X04Z X05Z X06A
		X06B X06C
	Prä	A11A
92.27.72↔		BORP KP KPP
	01	B01A B02A B02B
		B16Z B17A B17B
	02	C29Z
	03	D12A D15A D15B
		D20Z D25A D25B
	04	E01A E01B E08A
		E08B E36A E36B
		E86A
	06	G12A G12B G16A
		G16B G29A G29B
		G38A G38B
	07	H01A H01B H01C
		H16Z H33Z
	08	I54A I54B
	09	J02A J02B J03A
		J03B J04Z J11A
		J11B J18A J18B
	10	K15A
	11	L12Z
	12	M10Z M37Z
	13	N16Z N33Z
	21B	X04Z X05Z X06A
		X06B X06C
	Prä	A11A
92.27.73↔		BORP KP KPP
	01	B01A B02A B02B
		B16Z B17A B17B
	02	C29Z
	03	D12A D15A D15B
		D20Z D25A D25B
	04	E01A E01B E08A
		E08B E36A E36B
		E86A
	06	G12A G12B G16A
		G16B G29A G29B
		G38A G38B
	07	H01A H01B H01C
		H16Z H33Z
	08	I54A I54B
	09	J02A J02B J03A
		J03B J04Z J11A
		J11B J18A J18B
	10	K15A
	11	L12Z
	12	M10Z M37Z
	13	N16Z N33Z
	21B	X04Z X05Z X06A
		X06B X06C
	Prä	A11A
92.27.79↔		BORP KP KPP
	01	B01A B02A B02B
		B16Z B17A B17B
	02	C29Z
	03	D12A D15A D15B
		D20Z D25A D25B
	04	E01A E01B E08A
		E08B E36A E36B
		E86A
	06	G12A G12B G16A
		G16B G29A G29B
		G38A G38B
	07	H01A H01B H01C
		H16Z H33Z
	08	I54A I54B
	09	J02A J02B J03A
		J03B J04Z J11A
		J11B J18A J18B
	10	K15A
	11	L12Z
	12	M10Z M37Z
	13	N16Z N33Z
	21B	X04Z X05Z X06A
		X06B X06C
	Prä	A11A
92.28.00↔		BORP
	01	B01A B02A B02B
		B16Z B17A B17B
	02	C29Z
	03	D12A D15A D15B
		D20Z D25A D25B
	04	E01A E01B E08A
		E08B E36A E36B
		E86A
	06	G12A G12B G16A
		G16B G29A G29B
		G38A G38B
	07	H01A H01B H01C
		H16Z H33Z
	08	I54A I54B
	09	J02A J02B J03A
		J03B J04Z J11A
		J11B J18A J18B
	10	K15A
	11	L12Z
	12	M10Z M37Z
	13	N16Z N33Z
	21B	X04Z X05Z X06A
		X06B X06C
	Prä	A11A
92.28.09↔		BORP KP KPP
	01	B01A B02A B02B
		B16Z B17A B17B
	02	C29Z
	03	D12A D15A D15B
		D20Z D25A D25B
	04	E01A E01B E08A
		E08B E36A E36B
		E86A
	06	G12A G12B G16A
		G16B G29A G29B
		G38A G38B
	07	H01A H01B H01C
		H16Z H33Z
	08	I54A I54B
	09	J02A J02B J03A
		J03B J04Z J11A
		J11B J18A J18B
	10	K15A K15B
	11	L12Z
	12	M10Z M37Z
	13	N16Z N33Z
	21B	X04Z X05Z X06A
		X06B X06C
	Prä	A11A
92.28.11↔		BORP KP KPP
	01	B01A B02A B02B
		B16Z B17A B17B
	02	C29Z
	03	D12A D15A D15B
		D20Z D25A D25B
	04	E01A E01B E08A
		E08B E36A E36B
		E86A
	06	G12A G12B G16A
		G16B G29A G29B
		G38A G38B
	07	H01A H01B H01C
		H16Z H33Z
	08	I54A I54B
	09	J02A J02B J03A
		J03B J04Z J11A
		J11B J18A J18B
	10	K15A K15B
	11	L12Z
	12	M10Z M37Z
	13	N16Z N33Z
	21B	X04Z X05Z X06A
		X06B X06C
	Prä	A11A
92.28.14↔		BORP KP KPP
	01	B01A B02A B02B
		B16Z B17A B17B
	02	C29Z
	03	D12A D15A D15B
		D20Z D25A D25B
	04	E01A E01B E08A

PROC

PROC

CHOP	MDC	DRG
		E08B E36A E36B
		E86A
	06	G12A G12B G16A
		G16B G29A G29B
		G38A G38B
	07	H01A H01B H01C
		H16Z H33Z
	08	I54A I54B
	09	J02A J02B J03A
		J03B J04Z J11A
		J11B J18A J18B
	10	K15A
	11	L12Z
	12	M10Z M37Z
	13	N16Z N33Z
	21B	X04Z X05Z X06A
		X06B X06C
	Prä	A11A
92.28.24↔		BORP KP KPP
	01	B01A B02A B02B
		B16Z B17A B17B
	02	C29Z
	03	D12A D15A D15B
		D20Z D25A D25B
	04	E01A E01B E08A
		E08B E36A E36B
		E86A
	06	G12A G12B G16A
		G16B G29A G29B
		G38A G38B
	07	H01A H01B H01C
		H16Z H33Z
	08	I54A I54B
	09	J02A J02B J03A
		J03B J04Z J11A
		J11B J18A J18B
	10	K15A K15B
	11	L12Z
	12	M10Z M37Z
	13	N16Z N33Z
	21B	X04Z X05Z X06A
		X06B X06C
	Prä	A11A A50A A50B
		A50C A50D A50E
92.28.25↔		BORP KP KPP
	01	B01A B02A B02B
		B16Z B17A B17B
	02	C29Z
	03	D12A D15A D15B
		D20Z D25A D25B
	04	E01A E01B E08A
		E08B E36A E36B
		E86A
	06	G12A G12B G16A
		G16B G29A G29B
		G38A G38B
	07	H01A H01B H01C
		H16Z H33Z
	08	I54A I54B
	09	J02A J02B J03A
		J03B J04Z J11A
		J11B J18A J18B
	10	K15A K15B
	11	L12Z
	12	M10Z M37Z
	13	N16Z N33Z
	21B	X04Z X05Z X06A
		X06B X06C
	Prä	A11A A50A A50B
		A50C A50D
92.28.26↔		BORP KP KPP
	01	B01A B02A B02B
		B16Z B17A B17B
	02	C29Z
	03	D12A D15A D15B
		D20Z D25A D25B
	04	E01A E01B E08A
		E08B E36A E36B
		E86A
	06	G12A G12B G16A
		G16B G29A G29B
		G38A G38B
	07	H01A H01B H01C
		H16Z H33Z
	08	I54A I54B
	09	J02A J02B J03A
		J03B J04Z J11A
		J11B J18A J18B
	10	K15A K15B
	11	L12Z
	12	M10Z M37Z
	13	N16Z N33Z
	21B	X04Z X05Z X06A
		X06B X06C
	Prä	A11A A50A A50B
		A50C A50D
92.28.33↔		BORP KP KPP
	01	B01A B02A B02B
		B16Z B17A B17B
	02	C29Z
	03	D12A D15A D15B
		D20Z D25A D25B
	04	E01A E01B E08A
		E08B E36A E36B
		E86A
	06	G12A G12B G16A
		G16B G29A G29B
		G38A G38B
	07	H01A H01B H01C
		H16Z H33Z
	08	I54A I54B
	09	J02A J02B J03A
		J03B J04Z J11A
		J11B J18A J18B
	10	K15A K15B
	11	L12Z
	12	M10Z M37Z
	13	N16Z N33Z
	21B	X04Z X05Z X06A
		X06B X06C
	Prä	A11A
92.28.41↔		BORP KP KPP
	01	B01A B02A B02B
		B16Z B17A B17B
	02	C29Z
	03	D12A D15A D15B
		D20Z D25A D25B
	04	E01A E01B E08A
		E08B E36A E36B
		E86A
	06	G12A G12B G16A
		G16B G29A G29B
		G38A G38B
	07	H01A H01B H01C
		H16Z H33Z
	08	I54A I54B
	09	J02A J02B J03A
		J03B J04Z J11A
		J11B J18A J18B
	10	K15A K15B
	11	L12Z
	12	M10Z M37Z
	13	N16Z N33Z
	21B	X04Z X05Z X06A
		X06B X06C
	Prä	A11A
92.28.42↔		BORP KP KPP
	01	B01A B02A B02B
		B16Z B17A B17B
	02	C29Z
	03	D12A D15A D15B
		D20Z D25A D25B
	04	E01A E01B E08A
		E08B E36A E36B
		E86A
	06	G12A G12B G16A
		G16B G29A G29B
		G38A G38B
	07	H01A H01B H01C
		H16Z H33Z
	08	I54A I54B
	09	J02A J02B J03A
		J03B J04Z J11A
		J11B J18A J18B
	10	K15A
	11	L12Z
	12	M10Z M37Z
	13	N16Z N33Z
	21B	X04Z X05Z X06A
		X06B X06C
	Prä	A11A
92.28.43↔		BORP KP KPP
	01	B01A B02A B02B
		B16Z B17A B17B
	02	C29Z
	03	D12A D15A D15B
		D20Z D25A D25B
	04	E01A E01B E08A
		E08B E36A E36B
		E86A
	06	G12A G12B G16A
		G16B G29A G29B
		G38A G38B
	07	H01A H01B H01C
		H16Z H33Z
	08	I54A I54B
	09	J02A J02B J03A
		J03B J04Z J11A
		J11B J18A J18B
	10	K15A K15B
	11	L12Z
	12	M10Z M37Z
	13	N16Z N33Z
	21B	X04Z X05Z X06A
		X06B X06C
	Prä	A11A
92.28.44↔		BORP KP KPP
	01	B01A B02A B02B
		B16Z B17A B17B
	02	C29Z
	03	D12A D15A D15B
		D20Z D25A D25B
	04	E01A E01B E08A
		E08B E36A E36B
		E86A
	06	G12A G12B G16A
		G16B G29A G29B
		G38A G38B
	07	H01A H01B H01C
		H16Z H33Z

CHOP	MDC	DRG
	08	I54A I54B
	09	J02A J02B J03A J03B J04Z J11A J11B J18A J18B
	10	K15A
	11	L12Z
	12	M10Z M37Z
	13	N16Z N33Z
	21B	X04Z X05Z X06A X06B X06C
	Prä	A11A
92.28.45↔		BORP KP KPP
	01	B01A B02A B02B B16Z B17A B17B
	02	C29Z
	03	D12A D15A D15B D20Z D25A D25B
	04	E01A E01B E08A E08B E36A E36B E86A
	06	G12A G12B G16A G16B G29A G29B G38A G38B
	07	H01A H01B H01C H16Z H33Z
	08	I54A I54B
	09	J02A J02B J03A J03B J04Z J11A J11B J18A J18B
	10	K15A
	11	L12Z
	12	M10Z M37Z
	13	N16Z N33Z
	21B	X04Z X05Z X06A X06B X06C
	Prä	A11A
92.28.46↔		BORP KP KPP
	01	B01A B02A B02B B16Z B17A B17B
	02	C29Z
	03	D12A D15A D15B D20Z D25A D25B
	04	E01A E01B E08A E08B E36A E36B E86A
	06	G12A G12B G16A G16B G29A G29B G38A G38B
	07	H01A H01B H01C H16Z H33Z
	08	I54A I54B
	09	J02A J02B J03A J03B J04Z J11A J11B J18A J18B
	10	K15A
	11	L12Z
	12	M10Z M37Z
	13	N16Z N33Z
	21B	X04Z X05Z X06A X06B X06C
	Prä	A11A
92.28.51↔		BORP KP KPP
	01	B01A B02A B02B B16Z B17A B17B
	02	C29Z
	03	D12A D15A D15B D20Z D25A D25B
	04	E01A E01B E08A E08B E36A E36B E86A
	06	G12A G12B G16A G16B G29A G29B G38A G38B
	07	H01A H01B H01C H16Z H33Z
	08	I54A I54B
	09	J02A J02B J03A J03B J04Z J11A J11B J18A J18B
	10	K15A
	11	L12Z
	12	M10Z M37Z
	13	N16Z N33Z
	21B	X04Z X05Z X06A X06B X06C
	Prä	A11A
92.28.52↔		BORP KP KPP
	01	B01A B02A B02B B16Z B17A B17B
	02	C29Z
	03	D12A D15A D15B D20Z D25A D25B
	04	E01A E01B E08A E08B E36A E36B E86A
	06	G12A G12B G16A G16B G29A G29B G38A G38B
	07	H01A H01B H01C H16Z H33Z
	08	I54A I54B
	09	J02A J02B J03A J03B J04Z J11A J11B J18A J18B
	10	K15A
	11	L12Z
	12	M10Z M37Z
	13	N16Z N33Z
	21B	X04Z X05Z X06A X06B X06C
	Prä	A11A
92.28.53↔		BORP KP KPP
	01	B01A B02A B02B B16Z B17A B17B
	02	C29Z
	03	D12A D15A D15B D20Z D25A D25B
	04	E01A E01B E08A E08B E36A E36B E86A
	06	G12A G12B G16A G16B G29A G29B G38A G38B
	07	H01A H01B H01C H16Z H33Z
	08	I54A I54B
	09	J02A J02B J03A J03B J04Z J11A J11B J18A J18B
	10	K15A K15B
	11	L12Z
	12	M10Z M37Z
	13	N16Z N33Z
	21B	X04Z X05Z X06A X06B X06C
	Prä	A11A
92.28.64↔		BORP KP KPP
	01	B01A B02A B02B B16Z B17A B17B
	02	C29Z
	03	D12A D15A D15B D20Z D25A D25B
	04	E01A E01B E08A E08B E36A E36B E86A
	06	G12A G12B G16A G16B G29A G29B G38A G38B
	07	H01A H01B H01C H16Z H33Z
	08	I54A I54B
	09	J02A J02B J03A J03B J04Z J11A J11B J18A J18B
	10	K15A
	11	L12Z
	12	M10Z M37Z
	13	N16Z N33Z
	21B	X04Z X05Z X06A X06B X06C
	Prä	A11A A50A A50B A50C A50D A50E
92.28.65↔		BORP KP KPP
	01	B01A B02A B02B B16Z B17A B17B
	02	C29Z
	03	D12A D15A D15B D20Z D25A D25B
	04	E01A E01B E08A E08B E36A E36B E86A
	06	G12A G12B G16A G16B G29A G29B G38A G38B
	07	H01A H01B H01C H16Z H33Z
	08	I54A I54B
	09	J02A J02B J03A J03B J04Z J11A J11B J18A J18B
	10	K15A
	11	L12Z
	12	M10Z M37Z
	13	N16Z N33Z
	21B	X04Z X05Z X06A X06B X06C
	Prä	A11A A50A A50B A50C A50D
92.28.66↔		BORP KP KPP
	01	B01A B02A B02B B16Z B17A B17B
	02	C29Z
	03	D12A D15A D15B D20Z D25A D25B
	04	E01A E01B E08A E08B E36A E36B E86A
	06	G12A G12B G16A G16B G29A G29B G38A G38B
	07	H01A H01B H01C H16Z H33Z
	08	I54A I54B
	09	J02A J02B J03A J03B J04Z J11A J11B J18A J18B
	10	K15A K15B
	11	L12Z
	12	M10Z M37Z
	13	N16Z N33Z

PROC

PROC

CHOP	MDC	DRG
	21B	X04Z X05Z X06A X06B X06C
	Prä	A11A A50A A50B A50C A50D A50E
92.28.69↔		BORP KP KPP
	01	B01A B02A B02B B16Z B17A B17B
	02	C29Z
	03	D12A D15A D15B D20Z D25A D25B
	04	E01A E01B E08A E08B E36A E36B E86A
	06	G12A G12B G16A G16B G29A G29B G38A G38B
	07	H01A H01B H01C H16Z H33Z
	08	I54A I54B
	09	J02A J02B J03A J03B J04Z J11A J11B J18A J18B
	10	K15A K15B
	11	L12Z
	12	M10Z M37Z
	13	N16Z N33Z
	21B	X04Z X05Z X06A X06B X06C
	Prä	A11A A50A A50B A50C A50D A50E
92.28.6B↔		BORP KP KPP
	01	B01A B02A B02B B16Z B17A B17B
	02	C29Z
	03	D12A D15A D15B D20Z D25A D25B
	04	E01A E01B E08A E08B E36A E36B E86A
	06	G12A G12B G16A G16B G29A G29B G38A G38B
	07	H01A H01B H01C H16Z H33Z
	08	I54A I54B
	09	J02A J02B J03A J03B J04Z J11A J11B J18A J18B
	10	K15A K15B
	11	L12Z
	12	M10Z M37Z
	13	N16Z N33Z
	21B	X04Z X05Z X06A X06B X06C
	Prä	A11A A50A A50B A50C A50D
92.28.6C↔		BORP KP KPP
	01	B01A B02A B02B B16Z B17A B17B
	02	C29Z
	03	D12A D15A D15B D20Z D25A D25B
	04	E01A E01B E08A E08B E36A E36B E86A
	06	G12A G12B G16A G16B G29A G29B G38A G38B
	07	H01A H01B H01C H16Z H33Z
	08	I54A I54B
	09	J02A J02B J03A J03B J04Z J11A J11B J18A J18B
	10	K15A K15B
	11	L12Z
	12	M10Z M37Z
	13	N16Z N33Z
	21B	X04Z X05Z X06A X06B X06C
	Prä	A11A A50A A50B A50C A50D
92.28.71↔		BORP KP KPP
	01	B01A B02A B02B B16Z B17A B17B
	02	C29Z
	03	D12A D15A D15B D20Z D25A D25B
	04	E01A E01B E08A E08B E36A E36B E86A
	06	G12A G12B G16A G16B G29A G29B G38A G38B
	07	H01A H01B H01C H16Z H33Z
	08	I54A I54B
	09	J02A J02B J03A J03B J04Z J11A J11B J18A J18B
	10	K15A
	11	L12Z
	12	M10Z M37Z
	13	N16Z N33Z
	21B	X04Z X05Z X06A X06B X06C
	Prä	A11A
92.29.00↔		BORP
	01	B01A B02A B02B B16Z
	02	C29Z
	03	D12A D15A D15B D20Z D25A D25B
	04	E01A E01B E08A E08B E36A E36B E86A
	06	G16A G16B G29A G29B G38A G38B
	07	H01A H01B H01C H16Z H33Z
	08	I54A I54B
	09	J02A J18A J18B
	10	K15A
	11	L12Z
	12	M10Z M37Z
	13	N16Z N33Z
	Prä	A11A
92.29.09↔		BORP KP KPP
	01	B01A B02A B02B B16Z
	02	C29Z
	03	D12A D15A D15B D20Z D25A D25B
	04	E01A E01B E08A E08B E36A E36B E86A
	06	G16A G16B G29A G29B G38A G38B
	07	H01A H01B H01C H16Z H33Z
	08	I54A I54B
	09	J02A J18A J18B
	10	K15A
	11	L12Z
	12	M10Z M37Z
	13	N16Z N33Z
	Prä	A11A
92.29.11↔		BORP KP KPP
	01	B01A B02A B02B B16Z B17A B17B
	02	C29Z
	03	D12A D15A D15B D20Z D25A D25B
	04	E01A E01B E08A E08B E36A E36B E86A
	06	G12A G12B G16A G16B G29A G29B G38A G38B
	07	H01A H01B H01C H16Z H33Z
	08	I54A I54B
	09	J02A J02B J03A J03B J04Z J11A J11B J18A J18B
	10	K15A
	11	L12Z
	12	M10Z M37Z
	13	N16Z N33Z
	21B	X04Z X05Z X06A X06B X06C
	Prä	A11A
92.29.12↔		BORP KP KPP
	01	B01A B02A B02B B16Z B17A B17B
	02	C29Z
	03	D12A D15A D15B D20Z D25A D25B
	04	E01A E01B E08A E08B E36A E36B E86A
	06	G12A G12B G16A G16B G29A G29B G38A G38B
	07	H01A H01B H01C H16Z H33Z
	08	I54A I54B
	09	J02A J02B J03A J03B J04Z J11A J11B J18A J18B
	10	K15A
	11	L12Z
	12	M10Z M37Z
	13	N16Z N33Z
	21B	X04Z X05Z X06A X06B X06C
	Prä	A11A
92.29.13↔		BORP KP KPP
	01	B01A B02A B02B B16Z B17A B17B
	02	C29Z
	03	D12A D15A D15B D20Z D25A D25B
	04	E01A E01B E08A E08B E36A E36B E86A
	06	G12A G12B G16A G16B G29A G29B G38A G38B
	07	H01A H01B H01C

CHOP	MDC	DRG
		H16Z H33Z
	08	I54A I54B
	09	J02A J02B J03A
		J03B J04Z J11A
		J11B J18A J18B
	10	K15A
	11	L12Z
	12	M10Z M37Z
	13	N16Z N33Z
	21B	X04Z X05Z X06A
		X06B X06C
	Prä	A11A
92.29.19↔		BORP KP KPP
	01	B01A B02A B02B
		B16Z B17A B17B
	02	C29Z
	03	D12A D15A D15B
		D20Z D25A D25B
	04	E01A E01B E08A
		E08B E36A E36B
		E86A
	06	G12A G12B G16A
		G16B G29A G29B
		G38A G38B
	07	H01A H01B H01C
		H16Z H33Z
	08	I54A I54B
	09	J02A J02B J03A
		J03B J04Z J11A
		J11B J18A J18B
	10	K15A
	11	L12Z
	12	M10Z M37Z
	13	N16Z N33Z
	21B	X04Z X05Z X06A
		X06B X06C
	Prä	A11A
92.29.21↔		BORP KP KPP
	01	B01A B02A B02B
		B16Z B17A B17B
	02	C29Z
	03	D12A D15A D15B
		D20Z D25A D25B
	04	E01A E01B E08A
		E08B E36A E36B
		E86A
	06	G12A G12B G16A
		G16B G29A G29B
		G38A G38B
	07	H01A H01B H01C
		H16Z H33Z
	08	I54A I54B
	09	J02A J02B J03A
		J03B J04Z J11A
		J11B J18A J18B
	10	K15A
	11	L12Z
	12	M10Z M37Z
	13	N16Z N33Z
	21B	X04Z X05Z X06A
		X06B X06C
	Prä	A11A
92.29.22↔		BORP KP KPP
	01	B01A B02A B02B
		B16Z B17A B17B
	02	C29Z
	03	D12A D15A D15B
		D20Z D25A D25B
	04	E01A E01B E08A
		E08B E36A E36B
		E86A
	06	G12A G12B G16A
		G16B G29A G29B
		G38A G38B
	07	H01A H01B H01C
		H16Z H33Z
	08	I54A I54B
	09	J02A J02B J03A
		J03B J04Z J11A
		J11B J18A J18B
	10	K15A
	11	L12Z
	12	M10Z M37Z
	13	N16Z N33Z
	21B	X04Z X05Z X06A
		X06B X06C
	Prä	A11A
92.29.23↔		BORP KP KPP
	01	B01A B02A B02B
		B16Z B17A B17B
	02	C29Z
	03	D12A D15A D15B
		D20Z D25A D25B
	04	E01A E01B E08A
		E08B E36A E36B
		E86A
	06	G12A G12B G16A
		G16B G29A G29B
		G38A G38B
	07	H01A H01B H01C
		H16Z H33Z
	08	I54A I54B
	09	J02A J02B J03A
		J03B J04Z J11A
		J11B J18A J18B
	10	K15A
	11	L12Z
	12	M10Z M37Z
	13	N16Z N33Z
	21B	X04Z X05Z X06A
		X06B X06C
	Prä	A11A
92.29.24↔		BORP KP KPP
	01	B01A B02A B02B
		B16Z B17A B17B
	02	C29Z
	03	D12A D15A D15B
		D20Z D25A D25B
	04	E01A E01B E08A
		E08B E36A E36B
		E86A
	06	G12A G12B G16A
		G16B G29A G29B
		G37Z G38A G38B
	07	H01A H01B H01C
		H16Z H33Z
	08	I54A I54B
	09	J02A J02B J03A
		J03B J04Z J06A
		J11A J11B J18A
		J18B
	10	K15A
	11	L12Z
	12	M10Z M37Z
	13	N16Z N33Z
	17	R01A R01B
	21B	X04Z X05Z X06A
		X06B X06C
	Prä	A11A A97A A97B
		A97C A97D
92.29.29↔		BORP KP KPP
	01	B01A B02A B02B
		B16Z B17A B17B
	02	C29Z
	03	D12A D15A D15B
		D20Z D25A D25B
	04	E01A E01B E08A
		E08B E36A E36B
		E86A
	06	G12A G12B G16A
		G16B G29A G29B
		G38A G38B
	07	H01A H01B H01C
		H16Z H33Z
	08	I54A I54B
	09	J02A J02B J03A
		J03B J04Z J11A
		J11B J18A J18B
	10	K15A
	11	L12Z
	12	M10Z M37Z
	13	N16Z N33Z
	21B	X04Z X05Z X06A
		X06B X06C
	Prä	A11A
92.29.31↔		BORP KP KPP
	01	B01A B02A B02B
		B16Z B17A B17B
	02	C29Z
	03	D12A D15A D15B
		D20Z D25A D25B
	04	E01A E01B E08A
		E08B E36A E36B
		E86A
	06	G12A G12B G16A
		G16B G29A G29B
		G38A G38B
	07	H01A H01B H01C
		H16Z H33Z
	08	I54A I54B
	09	J02A J02B J03A
		J03B J04Z J11A
		J11B J18A J18B
	10	K15A
	11	L12Z
	12	M10Z M37Z
	13	N16Z N33Z
	21B	X04Z X05Z X06A
		X06B X06C
	Prä	A11A
92.29.32↔		BORP KP KPP
	01	B01A B02A B02B
		B16Z B17A B17B
	02	C29Z
	03	D12A D15A D15B
		D20Z D25A D25B
	04	E01A E01B E08A
		E08B E36A E36B
		E86A
	06	G12A G12B G16A
		G16B G29A G29B
		G38A G38B
	07	H01A H01B H01C
		H16Z H33Z
	08	I54A I54B
	09	J02A J02B J03A
		J03B J04Z J11A
		J11B J18A J18B
	10	K15A
	11	L12Z

PROC

CHOP	MDC	DRG
	12	M07Z
	13	N16Z N33Z
	21B	X04Z X05Z X06A
		X06B X06C
	Prä	A11A
92.29.33↔		BORP KP KPP
	01	B01A B02A B02B
		B16Z B17A B17B
	02	C29Z
	03	D12A D15A D15B
		D20Z D25A D25B
	04	E01A E01B E08A
		E08B E36A E36B
		E86A
	06	G12A G12B G16A
		G16B G29A G29B
		G38A G38B
	07	H01A H01B H01C
		H16Z H33Z
	08	I54A I54B
	09	J02A J02B J03A
		J03B J04Z J11A
		J11B J18A J18B
	10	K15A
	11	L12Z
	12	M07Z
	13	N16Z N33Z
	21B	X04Z X05Z X06A
		X06B X06C
	Prä	A11A
92.29.34↔		BORP KP KPP
	01	B01A B02A B02B
		B16Z B17A B17B
	02	C29Z
	03	D12A D15A D15B
		D20Z D25A D25B
	04	E01A E01B E08A
		E08B E36A E36B
		E86A
	06	G12A G12B G16A
		G16B G29A G29B
		G38A G38B
	07	H01A H01B H01C
		H16Z H33Z
	08	I54A I54B
	09	J02A J02B J03A
		J03B J04Z J11A
		J11B J18A J18B
	10	K15A
	11	L12Z
	12	M07Z
	13	N16Z N33Z
	21B	X04Z X05Z X06A
		X06B X06C
	Prä	A11A
92.29.35↔		BORP KP KPP
	01	B01A B02A B02B
		B16Z B17A B17B
	02	C29Z
	03	D12A D15A D15B
		D20Z D25A D25B
	04	E01A E01B E08A
		E08B E36A E36B
		E86A
	06	G12A G12B G16A
		G16B G29A G29B
		G38A G38B
	07	H01A H01B H01C
		H16Z H33Z
	08	I54A I54B
	09	J02A J02B J03A
		J03B J04Z J11A
		J11B J18A J18B
	10	K15A
	11	L12Z
	12	M07Z
	13	N16Z N33Z
	21B	X04Z X05Z X06A
		X06B X06C
	Prä	A11A
92.29.36↔		BORP KP KPP
	01	B01A B02A B02B
		B16Z B17A B17B
	02	C29Z
	03	D12A D15A D15B
		D20Z D25A D25B
	04	E01A E01B E08A
		E08B E36A E36B
		E86A
	06	G12A G12B G16A
		G16B G29A G29B
		G38A G38B
	07	H01A H01B H01C
		H16Z H33Z
	08	I54A I54B
	09	J02A J02B J03A
		J03B J04Z J11A
		J11B J18A J18B
	10	K15A
	11	L12Z
	12	M07Z
	13	N16Z N33Z
	21B	X04Z X05Z X06A
		X06B X06C
	Prä	A11A
92.29.37↔		BORP KP KPP
	01	B01A B02A B02B
		B16Z B17A B17B
	02	C29Z
	03	D12A D15A D15B
		D20Z D25A D25B
	04	E01A E01B E08A
		E08B E36A E36B
		E86A
	06	G12A G12B G16A
		G16B G29A G29B
		G38A G38B
	07	H01A H01B H01C
		H16Z H33Z
	08	I54A I54B
	09	J02A J02B J03A
		J03B J04Z J11A
		J11B J18A J18B
	10	K15A
	11	L12Z
	12	M07Z
	13	N16Z N33Z
	21B	X04Z X05Z X06A
		X06B X06C
	Prä	A11A
92.29.38↔		BORP KP KPP
	01	B01A B02A B02B
		B16Z B17A B17B
	02	C29Z
	03	D12A D15A D15B
		D20Z D25A D25B
	04	E01A E01B E08A
		E08B E36A E36B
		E86A
	06	G12A G12B G16A
		G16B G29A G29B
		G38A G38B
	07	H01A H01B H01C
		H16Z H33Z
	08	I54A I54B
	09	J02A J02B J03A
		J03B J04Z J11A
		J11B J18A J18B
	10	K15A
	11	L12Z
	12	M07Z
	13	N16Z N33Z
	21B	X04Z X05Z X06A
		X06B X06C
	Prä	A11A
92.29.39↔		BORP KP KPP
	01	B01A B02A B02B
		B16Z B17A B17B
	02	C29Z
	03	D12A D15A D15B
		D20Z D25A D25B
	04	E01A E01B E08A
		E08B E36A E36B
		E86A
	06	G12A G12B G16A
		G16B G29A G29B
		G38A G38B
	07	H01A H01B H01C
		H16Z H33Z
	08	I54A I54B
	09	J02A J02B J03A
		J03B J04Z J11A
		J11B J18A J18B
	10	K15A
	11	L12Z
	12	M07Z
	13	N16Z N33Z
	21B	X04Z X05Z X06A
		X06B X06C
	Prä	A11A
92.29.3A↔		BORP KP KPP
	01	B01A B02A B02B
		B16Z B17A B17B
	02	C29Z
	03	D12A D15A D15B
		D20Z D25A D25B
	04	E01A E01B E08A
		E08B E36A E36B
		E86A
	06	G12A G12B G16A
		G16B G29A G29B
		G38A G38B
	07	H01A H01B H01C
		H16Z H33Z
	08	I54A I54B
	09	J02A J02B J03A
		J03B J04Z J11A
		J11B J18A J18B
	10	K15A
	11	L12Z
	12	M07Z
	13	N16Z N33Z
	21B	X04Z X05Z X06A
		X06B X06C
	Prä	A11A
92.29.3B↔		BORP KP KPP
	01	B01A B02A B02B
		B16Z B17A B17B
	02	C29Z
	03	D12A D15A D15B

CHOP	MDC	DRG
		D20Z D25A D25B
	04	E01A E01B E08A
		E08B E36A E36B
		E86A
	06	G12A G12B G16A
		G16B G29A G29B
		G38A G38B
	07	H01A H01B H01C
		H16Z H33Z
	08	I54A I54B
	09	J02A J02B J03A
		J03B J04Z J11A
		J11B J18A J18B
	10	K15A
	11	L12Z
	12	M07Z
	13	N16Z N33Z
	21B	X04Z X05Z X06A
		X06B X06C
	Prä	A11A
92.29.3C↔		BORP KP KPP
	01	B01A B02A B02B
		B16Z B17A B17B
	02	C29Z
	03	D12A D15A D15B
		D20Z D25A D25B
	04	E01A E01B E08A
		E08B E36A E36B
		E86A
	06	G12A G12B G16A
		G16B G29A G29B
		G38A G38B
	07	H01A H01B H01C
		H16Z H33Z
	08	I54A I54B
	09	J02A J02B J03A
		J03B J04Z J11A
		J11B J18A J18B
	10	K15A
	11	L12Z
	12	M07Z
	13	N16Z N33Z
	21B	X04Z X05Z X06A
		X06B X06C
	Prä	A11A
92.29.3D↔		BORP KP KPP
	01	B01A B02A B02B
		B16Z B17A B17B
	02	C29Z
	03	D12A D15A D15B
		D20Z D25A D25B
	04	E01A E01B E08A
		E08B E36A E36B
		E86A
	06	G12A G12B G16A
		G16B G29A G29B
		G38A G38B
	07	H01A H01B H01C
		H16Z H33Z
	08	I54A I54B
	09	J02A J02B J03A
		J03B J04Z J11A
		J11B J18A J18B
	10	K15A
	11	L12Z
	12	M07Z
	13	N16Z N33Z
	21B	X04Z X05Z X06A
		X06B X06C
	Prä	A11A

CHOP	MDC	DRG
92.29.3E↔		BORP KP KPP
	01	B01A B02A B02B
		B16Z B17A B17B
	02	C29Z
	03	D12A D15A D15B
		D20Z D25A D25B
	04	E01A E01B E08A
		E08B E36A E36B
		E86A
	06	G12A G12B G16A
		G16B G29A G29B
		G38A G38B
	07	H01A H01B H01C
		H16Z H33Z
	08	I54A I54B
	09	J02A J02B J03A
		J03B J04Z J11A
		J11B J18A J18B
	10	K15A
	11	L12Z
	12	M07Z
	13	N16Z N33Z
	21B	X04Z X05Z X06A
		X06B X06C
	Prä	A11A
92.29.40↔		BORP
	01	B01A B02A B02B
		B16Z
	02	C29Z
	03	D12A D15A D15B
		D20Z D25A D25B
	04	E01A E01B E08A
		E08B E36A E36B
		E86A
	06	G16A G16B G29A
		G29B G38A G38B
	07	H01A H01B H01C
		H16Z H33Z
	08	I54A I54B
	09	J02A J18A J18B
	10	K15A
	11	L12Z
	12	M10Z M37Z
	13	N16Z N33Z
	Prä	A11A
92.29.49↔		BORP KP KPP
	01	B01A B02A B02B
		B16Z
	02	C29Z
	03	D12A D15A D15B
		D20Z D25A D25B
	04	E01A E01B E08A
		E08B E36A E36B
		E86A
	06	G16A G16B G29A
		G29B G38A G38B
	07	H01A H01B H01C
		H16Z H33Z
	08	I54A I54B
	09	J02A J18A J18B
	10	K15A
	11	L12Z
	12	M10Z M37Z
	13	N16Z N33Z
	Prä	A11A
92.29.51↔		BORP KP KPP
	01	B01A B02A B02B
		B16Z
	02	C29Z
	03	D12A D15A D15B

CHOP	MDC	DRG
		D20Z D25A D25B
	04	E01A E01B E08A
		E08B E36A E36B
		E86A
	06	G16A G16B G29A
		G29B G38A G38B
	07	H01A H01B H01C
		H16Z H33Z
	08	I54A I54B
	09	J02A J18A J18B
	10	K15A
	11	L12Z
	12	M10Z M37Z
	13	N16Z N33Z
	Prä	A11A
92.29.60‡↔	01	B60A
	03	D20Z
	04	E71A
92.29.61‡↔	01	B60A
	03	D20Z
	04	E71A
92.29.62‡↔	01	B60A
	03	D20Z
	04	E71A
92.29.63‡↔	01	B60A
	03	D20Z
	04	E71A
92.29.64‡↔	01	B60A
	03	D20Z
	04	E71A
92.29.65‡↔	01	B60A
	03	D20Z
	04	E71A
92.29.69‡↔	01	B60A
	03	D20Z
	04	E71A
92.29.70‡↔	01	B60A
	03	D20Z
	04	E71A
92.29.71‡↔	01	B60A
	03	D20Z
	04	E71A
92.29.72‡↔	01	B60A
	03	D20Z
	04	E71A
92.29.73‡↔	01	B60A
	03	D20Z
	04	E71A
92.29.74‡↔	01	B60A
	03	D20Z
	04	E71A
92.29.79‡↔	01	B60A
	03	D20Z
	04	E71A
92.29.80‡↔	01	B60A
	03	D20Z
	04	E71A
92.29.81‡↔	01	B60A
	03	D20Z
	04	E71A
92.29.82‡↔	01	B60A
	03	D20Z
	04	E71A
92.29.83‡↔	01	B60A
	03	D20Z
	04	E71A
92.29.84‡↔	01	B60A
	03	D20Z
	04	E71A
92.29.85‡↔	01	B60A

PROC

CHOP	MDC	DRG
	03	D20Z
	04	E71A
92.29.86‡↔	01	B60A
	03	D20Z
	04	E71A
92.29.87‡↔	01	B60A
	03	D20Z
	04	E71A
92.29.88‡↔	01	B60A
	03	D20Z
	04	E71A
92.29.89‡↔	01	B60A
	03	D20Z
	04	E71A
92.30.00↔		BORP KPP
	01	B01A B02A B02B
		B16Z
	02	C29Z
	03	D12A D15A D15B
		D20Z D25A D25B
	04	E01A E01B E08A
		E08B E36A E36B
		E86A
	06	G16A G16B G29A
		G29B G38A G38B
	07	H01A H01B H01C
		H16Z H33Z
	08	I54A I54B
	09	J02A J18A J18B
	10	K15A
	11	L12Z
	12	M10Z M37Z
	13	N16Z N33Z
	17	R50A
	21A	W01A W01B W01C
	21B	X06A X06B X06C
	Prä	A11A A36A A90A
		A90B A93A A93B
		A93C
92.30.01↔		BORP KPP
	01	B01A B02A B02B
		B16Z
	02	C29Z
	03	D12A D15A D15B
		D20Z D25A D25B
	04	E01A E01B E08A
		E08B E36A E36B
		E86A
	06	G16A G16B G29A
		G29B G38A G38B
	07	H01A H01B H01C
		H16Z H33Z
	08	I54A I54B
	09	J02A J18A J18B
	10	K15A
	11	L12Z
	12	M10Z M37Z
	13	N16Z N33Z
	17	R50A
	21A	W01A W01B W01C
	21B	X06A X06B X06C
	Prä	A11A A36A A90A
		A90B A93A A93B
		A93C
92.30.02↔		BORP KPP
	01	B01A B02A B02B
		B16Z
	02	C29Z
	03	D12A D15A D15B
		D20Z D25A D25B
	04	E01A E01B E08A
		E08B E36A E36B
		E86A
	06	G16A G16B G29A
		G29B G38A G38B
	07	H01A H01B H01C
		H16Z H33Z
	08	I54A I54B
	09	J02A J18A J18B
	10	K15A
	11	L12Z
	12	M10Z M37Z
	13	N16Z N33Z
	17	R50A
	21A	W01A W01B W01C
	21B	X06A X06B X06C
	Prä	A11A A36A A90A
		A90B A93A A93B
		A93C
92.30.20↔		BORP KP KPP
	01	B01A B02A B02B
		B16Z
	02	C29Z
	03	D12A D15A D15B
		D20Z D25A D25B
	04	E01A E01B E08A
		E08B E36A E36B
		E86A
	06	G16A G16B G29A
		G29B G38A G38B
	07	H01A H01B H01C
		H16Z H33Z
	08	I54A I54B
	09	J02A J18A J18B
	10	K15A
	11	L12Z
	12	M10Z M37Z
	13	N16Z N33Z
	17	R50A
	21A	W01A W01B W01C
	21B	X06A X06B X06C
	Prä	A11A A36A A90A
		A90B A93A A93B
		A93C
92.30.21↔		BORP KP KPP
	01	B01A B02A B02B
		B16Z
	02	C29Z
	03	D12A D15A D15B
		D20Z D25A D25B
	04	E01A E01B E08A
		E08B E36A E36B
		E86A
	06	G16A G16B G29A
		G29B G38A G38B
	07	H01A H01B H01C
		H16Z H33Z
	08	I54A I54B
	09	J02A J18A J18B
	10	K15A
	11	L12Z
	12	M10Z M37Z
	13	N16Z N33Z
	17	R50A
	21A	W01A W01B W01C
	21B	X06A X06B X06C
	Prä	A11A A36A A90A
		A90B A93A A93B
		A93C
92.30.22↔		BORP KP KPP
	01	B01A B02A B02B
		B16Z
	02	C29Z
	03	D12A D15A D15B
		D20Z D25A D25B
	04	E01A E01B E08A
		E08B E36A E36B
		E86A
	06	G16A G16B G29A
		G29B G38A G38B
	07	H01A H01B H01C
		H16Z H33Z
	08	I54A I54B
	09	J02A J18A J18B
	10	K15A
	11	L12Z
	12	M10Z M37Z
	13	N16Z N33Z
	17	R50A
	21A	W01A W01B W01C
	21B	X06A X06B X06C
	Prä	A11A A36A A90A
		A90B A93A A93B
		A93C
92.30.30↔		BORP KP KPP
	01	B01A B02A B02B
		B16Z
	02	C29Z
	03	D12A D15A D15B
		D20Z D25A D25B
	04	E01A E01B E08A
		E08B E36A E36B
		E86A
	06	G16A G16B G29A
		G29B G38A G38B
	07	H01A H01B H01C
		H16Z H33Z
	08	I54A I54B
	09	J02A J18A J18B
	10	K15A
	11	L12Z
	12	M10Z M37Z
	13	N16Z N33Z
	17	R50A
	21A	W01A W01B W01C
	21B	X06A X06B X06C
	Prä	A11A A36A A90A
		A90B A93A A93B
		A93C
92.30.31↔		BORP KP KPP
	01	B01A B02A B02B
		B16Z
	02	C29Z
	03	D12A D15A D15B
		D20Z D25A D25B
	04	E01A E01B E08A
		E08B E36A E36B
		E86A
	06	G16A G16B G29A
		G29B G38A G38B
	07	H01A H01B H01C
		H16Z H33Z
	08	I54A I54B
	09	J02A J18A J18B
	10	K15A
	11	L12Z
	12	M10Z M37Z
	13	N16Z N33Z
	17	R50A
	21A	W01A W01B W01C

CHOP	MDC	DRG
	21B	X06A X06B X06C
	Prä	A11A A36A A90A A90B A93A A93B A93C
92.30.32↔		BORP KP KPP
	01	B01A B02A B02B B16Z
	02	C29Z
	03	D12A D15A D15B D20Z D25A D25B
	04	E01A E01B E08A E08B E36A E36B E86A
	06	G16A G16B G29A G29B G38A G38B
	07	H01A H01B H01C H16Z H33Z
	08	I54A I54B
	09	J02A J18A J18B
	10	K15A
	11	L12Z
	12	M10Z M37Z
	13	N16Z N33Z
	17	R50A
	21A	W01A W01B W01C
	21B	X06A X06B X06C
	Prä	A11A A36A A90A A90B A93A A93B A93C
92.30.99↔		BORP KP KPP
	01	B01A B02A B02B B16Z
	02	C29Z
	03	D12A D15A D15B D20Z D25A D25B
	04	E01A E01B E08A E08B E36A E36B E86A
	06	G16A G16B G29A G29B G38A G38B
	07	H01A H01B H01C H16Z H33Z
	08	I54A I54B
	09	J02A J18A J18B
	10	K15A
	11	L12Z
	12	M10Z M37Z
	13	N16Z N33Z
	17	R50A
	21A	W01A W01B W01C
	21B	X06A X06B X06C
	Prä	A11A A36A A90A A90B A93A A93B A93C
92.31.00↔		BORP KP KPP
	01	B01A B02A B02B B16Z
	02	C29Z
	03	D12A D15A D15B D20Z D25A D25B
	04	E01A E01B E08A E08B E36A E36B E86A
	06	G16A G16B G29A G29B G38A G38B
	07	H01A H01B H01C H16Z H33Z
	08	I54A I54B
	09	J02A J18A J18B
	10	K15A
	11	L12Z
	12	M10Z M37Z
	13	N16Z N33Z
	17	R50A
	21A	W01A W01B W01C
	21B	X06A X06B X06C
	Prä	A11A A36A A90A A90B A93A A93B A93C
92.31.10↔		BORP KP KPP
	01	B01A B02A B02B B16Z
	02	C29Z
	03	D12A D15A D15B D20Z D25A D25B
	04	E01A E01B E08A E08B E36A E36B E86A
	06	G16A G16B G29A G29B G38A G38B
	07	H01A H01B H01C H16Z H33Z
	08	I54A I54B
	09	J02A J18A J18B
	10	K15A
	11	L12Z
	12	M10Z M37Z
	13	N16Z N33Z
	17	R50A
	21A	W01A W01B W01C
	21B	X06A X06B X06C
	Prä	A11A A36A A90A A90B A93A A93B A93C
92.32.00↔		BORP
	01	B01A B02A B02B B16Z
	02	C29Z
	03	D12A D15A D15B D20Z D25A D25B
	04	E01A E01B E08A E08B E36A E36B E86A
	06	G16A G16B G29A G29B G38A G38B
	07	H01A H01B H01C H16Z H33Z
	08	I54A I54B
	09	J02A J18A J18B
	10	K15A
	11	L12Z
	12	M10Z M37Z
	13	N16Z N33Z
	17	R50A
	21A	W01A W01B W01C
	21B	X06A X06B X06C
	Prä	A11A A36A A90A A90B A93A A93B A93C
92.32.01↔		BORP KP KPP
	01	B01A B02A B02B B16Z
	02	C29Z
	03	D12A D15A D15B D20Z D25A D25B
	04	E01A E01B E08A E08B E36A E36B E86A
	06	G16A G16B G29A G29B G38A G38B
	07	H01A H01B H01C H16Z H33Z
	08	I54A I54B
	09	J02A J18A J18B
	10	K15A
	11	L12Z
	12	M10Z M37Z
	13	N16Z N33Z
	17	R50A
	21A	W01A W01B W01C
	21B	X06A X06B X06C
	Prä	A11A A36A A90A A90B A93A A93B A93C
92.33.00↔		BORP
	01	B01A B02A B02B B16Z
	02	C29Z
	03	D12A D15A D15B D20Z D25A D25B
	04	E01A E01B E08A E08B E36A E36B E86A
	06	G16A G16B G29A G29B G38A G38B
	07	H01A H01B H01C H16Z H33Z
	08	I54A I54B
	09	J02A J18A J18B
	10	K15A
	11	L12Z
	12	M10Z M37Z
	13	N16Z N33Z
	17	R50A
	21A	W01A W01B W01C
	21B	X06A X06B X06C
	Prä	A11A A36A A90A A90B A93A A93B A93C
92.33.01↔		BORP KP KPP
	01	B01A B02A B02B B16Z
	02	C29Z
	03	D12A D15A D15B D20Z D25A D25B
	04	E01A E01B E08A E08B E36A E36B E86A
	06	G16A G16B G29A G29B G38A G38B
	07	H01A H01B H01C H16Z H33Z
	08	I54A I54B
	09	J02A J18A J18B
	10	K15A
	11	L12Z
	12	M10Z M37Z
	13	N16Z N33Z
	17	R50A
	21A	W01A W01B W01C
	21B	X06A X06B X06C
	Prä	A11A A36A A90A A90B A93A A93B A93C
92.33.11↔		BORP KP KPP
	01	B01A B02A B02B B16Z
	02	C29Z
	03	D12A D15A D15B D20Z D25A D25B

PROC

PROC

CHOP	MDC	DRG
	04	E01A E01B E08A
		E08B E36A E36B
		E86A
	06	G16A G16B G29A
		G29B G38A G38B
	07	H01A H01B H01C
		H16Z H33Z
	08	I54A I54B
	09	J02A J18A J18B
	10	K15A
	11	L12Z
	12	M10Z M37Z
	13	N16Z N33Z
	17	R50A
	21A	W01A W01B W01C
	21B	X06A X06B X06C
	Prä	A11A A36A A90A
		A90B A93A A93B
		A93C
92.39.00↔		BORP
	01	B01A B01B B02A
		B02B B16Z B20A
		B20B B20C
	02	C29Z
	03	D12A D15A D15B
		D20Z D25A D25B
	04	E01A E01B E08A
		E08B E36A E36B
		E86A
	06	G16A G16B G29A
		G29B G33Z G38A
		G38B G38C
	07	H01A H01B H01C
		H16Z H33Z
	08	I54A I54B
	09	J02A J18A J18B
	10	K15A K15B
	11	L12Z L33Z
	12	M10Z M37Z
	13	N16Z N33Z
	17	R50A
	21A	W01A W01B W01C
	21B	X06A X06B X06C
		X07A X07B
	Prä	A11A A36A A90A
		A90B A93A A93B
		A93C
92.39.01↔		BORP KP KPP
	01	B01A B01B B02A
		B02B B16Z B20A
		B20B B20C
	02	C29Z
	03	D12A D15A D15B
		D20Z D25A D25B
	04	E01A E01B E08A
		E08B E36A E36B
		E86A
	06	G16A G16B G29A
		G29B G33Z G38A
		G38B G38C
	07	H01A H01B H01C
		H16Z H33Z
	08	I54A I54B
	09	J02A J18A J18B
	10	K15A
	11	L12Z L33Z
	12	M10Z M37Z
	13	N16Z N33Z
	17	R50A
	21A	W01A W01B W01C
	21B	X06A X06B X06C
		X07A X07B
	Prä	A11A A36A A90A
		A90B A93A A93B
		A93C
92.39.11↔		BORP KP KPP
	01	B01A B01B B02A
		B02B B16Z B20A
		B20B B20C
	02	C29Z
	03	D12A D15A D15B
		D20Z D25A D25B
	04	E01A E01B E08A
		E08B E36A E36B
		E86A
	06	G16A G16B G29A
		G29B G33Z G38A
		G38B G38C
	07	H01A H01B H01C
		H16Z H33Z
	08	I54A I54B
	09	J02A J18A J18B
	10	K15A
	11	L12Z L33Z
	12	M10Z M37Z
	13	N16Z N33Z
	17	R50A
	21A	W01A W01B W01C
	21B	X06A X06B X06C
		X07A X07B
	Prä	A11A A36A A90A
		A90B A93A A93B
		A93C
92.39.20↔		BORP KP KPP
	01	B01A B01B B02A
		B02B B16Z B20A
		B20B B20C
	02	C29Z
	03	D12A D15A D15B
		D20Z D25A D25B
	04	E01A E01B E08A
		E08B E36A E36B
		E86A
	06	G16A G16B G29A
		G29B G33Z G38A
		G38B G38C
	07	H01A H01B H01C
		H16Z H33Z
	08	I54A I54B
	09	J02A J18A J18B
	10	K15A
	11	L12Z L33Z
	12	M10Z M37Z
	13	N16Z N33Z
	17	R50A
	21A	W01A W01B W01C
	21B	X06A X06B X06C
		X07A X07B
	Prä	A11A A36A A90A
		A90B A93A A93B
		A93C
92.39.21↔		BORP KP KPP
	01	B01A B01B B02A
		B02B B16Z B20A
		B20B B20C
	02	C29Z
	03	D12A D15A D15B
		D20Z D25A D25B
	04	E01A E01B E08A
		E08B E36A E36B
		E86A
	06	G16A G16B G29A
		G29B G33Z G38A
		G38B G38C
	07	H01A H01B H01C
		H16Z H33Z
	08	I54A I54B
	09	J02A J18A J18B
	10	K15A
	11	L12Z L33Z
	12	M10Z M37Z
	13	N16Z N33Z
	17	R50A
	21A	W01A W01B W01C
	21B	X06A X06B X06C
		X07A X07B
	Prä	A11A A36A A90A
		A90B A93A A93B
		A93C
92.39.22↔		BORP KP KPP
	01	B01A B01B B02A
		B02B B16Z B20A
		B20B B20C
	02	C29Z
	03	D12A D15A D15B
		D20Z D25A D25B
	04	E01A E01B E08A
		E08B E36A E36B
		E86A
	06	G16A G16B G29A
		G29B G33Z G38A
		G38B G38C
	07	H01A H01B H01C
		H16Z H33Z
	08	I54A I54B
	09	J02A J18A J18B
	10	K15A
	11	L12Z L33Z
	12	M10Z M37Z
	13	N16Z N33Z
	17	R50A
	21A	W01A W01B W01C
	21B	X06A X06B X06C
		X07A X07B
	Prä	A11A A36A A90A
		A90B A93A A93B
		A93C
92.39.29↔		BORP KP KPP
	01	B01A B01B B02A
		B02B B16Z B20A
		B20B B20C
	02	C29Z
	03	D12A D15A D15B
		D20Z D25A D25B
	04	E01A E01B E08A
		E08B E36A E36B
		E86A
	06	G16A G16B G29A
		G29B G33Z G38A
		G38B G38C
	07	H01A H01B H01C
		H16Z H33Z
	08	I54A I54B
	09	J02A J18A J18B
	10	K15A
	11	L12Z L33Z
	12	M10Z M37Z
	13	N16Z N33Z
	17	R50A
	21A	W01A W01B W01C

CHOP	MDC	DRG
	21B	X06A X06B X06C
		X07A X07B
	Prä	A11A A36A A90A
		A90B A93A A93B
		A93C
92.39.30↔		BORP KP KPP
	01	B01A B01B B02A
		B02B B16Z B20A
		B20B B20C
	02	C29Z
	03	D12A D15A D15B
		D20Z D25A D25B
	04	E01A E01B E08A
		E08B E36A E36B
		E86A
	06	G16A G16B G29A
		G29B G33Z G38A
		G38B G38C
	07	H01A H01B H01C
		H16Z H33Z
	08	I54A I54B
	09	J02A J18A J18B
	10	K15A
	11	L12Z L33Z
	12	M10Z M37Z
	13	N16Z N33Z
	17	R50A
	21A	W01A W01B W01C
	21B	X06A X06B X06C
		X07A X07B
	Prä	A11A A36A A90A
		A90B A93A A93B
		A93C
92.39.31↔		BORP KP KPP
	01	B01A B01B B02A
		B02B B16Z B20A
		B20B B20C
	02	C29Z
	03	D12A D15A D15B
		D20Z D25A D25B
	04	E01A E01B E08A
		E08B E36A E36B
		E86A
	06	G16A G16B G29A
		G29B G33Z G38A
		G38B G38C
	07	H01A H01B H01C
		H16Z H33Z
	08	I54A I54B
	09	J02A J18A J18B
	10	K15A
	11	L12Z L33Z
	12	M10Z M37Z
	13	N16Z N33Z
	17	R50A
	21A	W01A W01B W01C
	21B	X06A X06B X06C
		X07A X07B
	Prä	A11A A36A A90A
		A90B A93A A93B
		A93C
92.39.32↔		BORP KP KPP
	01	B01A B01B B02A
		B02B B16Z B20A
		B20B B20C
	02	C29Z
	03	D12A D15A D15B
		D20Z D25A D25B
	04	E01A E01B E08A
		E08B E36A E36B
		E86A
	06	G16A G16B G29A
		G29B G33Z G38A
		G38B G38C
	07	H01A H01B H01C
		H16Z H33Z
	08	I54A I54B
	09	J02A J18A J18B
	10	K15A
	11	L12Z
	12	M10Z M37Z
	13	N16Z N33Z
	17	R50A
	Prä	A11A A36A A90A
		A90B A93A A93B
92.39.39↔		BORP KP KPP
	01	B01A B01B B02A
		B02B B16Z B20A
		B20B B20C
	02	C29Z
	03	D12A D15A D15B
		D20Z D25A D25B
	04	E01A E01B E08A
		E08B E36A E36B
		E86A
	06	G16A G16B G29A
		G29B G33Z G38A
		G38B G38C
	07	H01A H01B H01C
		H16Z H33Z
	08	I54A I54B
	09	J02A J18A J18B
	10	K15A
	11	L12Z L33Z
	12	M10Z M37Z
	13	N16Z N33Z
	17	R50A
	21A	W01A W01B W01C
	21B	X06A X06B X06C
		X07A X07B
	Prä	A11A A36A A90A
		A90B A93A A93B
		A93C
92.41↔		BORP KP KPP
	01	B01A B02A B02B
		B16Z
	02	C29Z
	03	D12A D15A D15B
		D20Z D25A D25B
	04	E01A E01B E08A
		E08B E36A E36B
		E86A
	06	G16A G16B G29A
		G29B G37Z G38A
		G38B
	07	H01A H01B H01C
		H16Z H33Z
	08	I54A I54B
	09	J02A J18A J18B
	10	K15A
	11	L12Z
	12	M10Z M37Z
	13	N16Z N33Z
	17	R50A
	Prä	A11A A36A A90A
		A90B A93A A93B
		A93C
93.38.05‡↔	Prä	A92A A92B A92C
	01	B60A
	08	I97A I97B
93.38.06‡↔	Prä	A92A A92B
	01	B60A
	08	I97A
93.38.07‡↔	Prä	A92A A92B
	01	B60A
	08	I97A
93.38.11‡↔	Prä	A92A A92B A92C
	01	B60A
	08	I97A I97B
93.38.12‡↔	Prä	A92A A92B
	01	B60A
	08	I97A
93.38.13‡↔	Prä	A92A A92B
	01	B60A
	08	I97A
93.41‡↔	01	B60A
	08	I10A I10B
	21A	W01A W01B W01C
		W01D W01E
93.57.15‡↔		VAC VAC I VAC II
	01	B60A
93.57.16‡↔		VAC VAC I VAC II
		VBOR
	01	B60A
	06	G12A
93.57.17‡↔		VAC VAC I VAC II
		VBOR
	01	B60A
	06	G12A
93.57.18‡↔		VAC VAC I VAC II
		VBOR
	01	B60A
	06	G12A
93.57.1A‡↔		VAC VAC I VAC II
		VBOR
	01	B60A
	06	G12A
93.57.1B‡↔		VAC VAC I VAC II
		VBOR
	01	B60A
	06	G12A
93.57.1C‡↔		VAC VAC I VAC II
		VBOR
	01	B60A
	06	G12A
93.57.1D‡↔		VAC VAC I VAC II
		VBOR
	01	B60A
	06	G12A
93.57.1E‡↔		VAC VAC I VAC II
		VBOR
	01	B60A
	06	G12A
93.59.50‡↔	01	B60A
	15	P67C
93.59.51‡↔		KP KPP MKOR
	01	B60A
	03	D15A D15B
	06	G35A
	08	I02A I02B I02C
		I08A
	15	P67C
	18B	T60A T60B T60C
		T60F T60G
	22	Y02A
	Prä	A94A A94B A94C

PROC

PROC

CHOP	MDC	DRG
		A94D
93.59.52‡↔		HAK KP KPP MKOR
	01	B60A
	03	D15A D15B
	05	F04Z F13A F13B
	06	G35A
	08	I02A I02B I02C I08A
	15	P67C
	17	R01A R01B R01C
	18B	T60A T60B T60C T60F T60G
	22	Y02A
	Prä	A94A A94B A94C A97A A97B A97C A97D
93.59.53‡↔		HAK KP KPP MKOR
	01	B60A
	03	D15A D15B
	04	E36A
	05	F04Z F13A F13B
	06	G35A
	08	I02A I02B I02C I08A
	15	P67C
	17	R01A R01B R01C
	18B	T60A T60B T60C T60F T60G
	22	Y02A
	Prä	A94A A94B A94C A97A A97B A97C A97D
93.86.E2‡↔		FR 7
	01	B60A
	Prä	A11A A11B A11C A11D
93.86.F2‡↔		FR 14 FR 7 HAK
	01	B60A
	Prä	A11A A11B A11C A11D
93.86.G2‡↔		FR 14 FR 7 HAK
	01	B60A
	Prä	A11A A11B A11C A11D
93.86.H2‡↔		FR 14 FR 7 HAK
	01	B60A
	Prä	A11A A11B A11C A11D
93.86.I2‡↔		FR 14 FR 7 HAK
	01	B60A
	Prä	A11A A11B A11C A11D
93.86.J2‡↔		FR 14 FR 7 HAK
	01	B60A
	Prä	A06A A06B A11A A11B A11C A11D A43A
93.86.K2‡↔		FR 14 FR 7 HAK
	01	B60A
	Prä	A06A A06B A11A A11B A11C A11D A43A
93.86.L2‡↔		FR 14 FR 7 HAK
	01	B60A
	Prä	A06A A06B A11A A11B A11C A11D A43A
93.86.M2‡↔		FR 14 FR 7 HAK
	01	B60A
	Prä	A06A A06B A11A A11B A11C A11D A43A
93.86.N2‡↔		FR 14 FR 7 HAK
	01	B60A
	Prä	A06A A06B A11A A11B A11C A11D A43A
93.86.O2‡↔		FR 14 FR 7 HAK
	01	B60A
	Prä	A06A A06B A11A A11B A11C A11D A43A
93.87.25‡↔	Prä	A46A A46B A46C A46D A46E A46F
	01	B60A
93.87.26‡↔	Prä	A46A A46B A46C A46D A46E A46F
	01	B60A
93.87.27‡↔	Prä	A46A A46B A46C A46D A46E A46F
	01	B60A
93.87.28‡↔	Prä	A46A A46B A46C A46D A46E A46F
	01	B60A
93.87.2A‡↔	Prä	A46A A46B A46C A46D A46E A46F
	01	B60A
93.87.31‡↔	Prä	A46A A46B A46C A46D A46E
	01	B60A
93.87.32‡↔	Prä	A46A A46B A46C A46D A46E
	01	B60A
93.87.33‡↔	Prä	A46A A46B A46C A46D A46E
	01	B60A
93.87.34‡↔	Prä	A46A A46B A46C A46D A46E
	01	B60A
93.87.41‡↔	Prä	A46A A46B A46C A46D A46E
	01	B60A
93.87.42‡↔	Prä	A46A A46B A46C A46D A46E
	01	B60A
93.87.43‡↔	Prä	A46A A46B A46C A46D A46E
	01	B60A
93.87.44‡↔	Prä	A46A A46B A46C A46D A46E
	01	B60A
93.87.51‡↔	Prä	A46A A46B A46C A46D A46E
	01	B60A
93.87.52‡↔	Prä	A46A A46B A46C A46D A46E
	01	B60A
93.87.53‡↔	Prä	A46A A46B A46C A46D A46E
	01	B60A
93.87.54‡↔	Prä	A46A A46B A46C A46D A46E
	01	B60A
93.87.61‡↔	Prä	A46A A46B A46C A46D A46E
	01	B60A
93.87.62‡↔	Prä	A46A A46B A46C A46D A46E
	01	B60A
93.87.63‡↔	Prä	A46A A46B A46C A46D A46E
	01	B60A
93.87.64‡↔	Prä	A46A A46B A46C A46D A46E
	01	B60A
93.87.71‡↔	Prä	A46A A46B A46C A46D A46E
	01	B60A
93.87.72‡↔	Prä	A46A A46B A46C A46D A46E
	01	B60A
93.87.73‡↔	Prä	A46A A46B A46C A46D A46E
	01	B60A
93.87.74‡↔	Prä	A46A A46B A46C A46D A46E
	01	B60A
93.87.81‡↔	Prä	A46A A46B A46C A46D A46E
	01	B60A
93.87.82‡↔	Prä	A46A A46B A46C A46D A46E
	01	B60A
93.87.83‡↔	Prä	A46A A46B A46C A46D A46E
	01	B60A
93.87.84‡↔	Prä	A46A A46B A46C A46D A46E
	01	B60A
93.87.A1‡↔	Prä	A46A A46B A46C A46D A46E
	01	B60A
93.87.A2‡↔	Prä	A46A A46B A46C A46D A46E
	01	B60A
93.87.A3‡↔	Prä	A46A A46B A46C A46D A46E
	01	B60A
93.87.A4‡↔	Prä	A46A A46B A46C A46D A46E
	01	B60A
93.87.B1‡↔	Prä	A46A A46B A46C A46D A46E
	01	B60A
93.87.B2‡↔	Prä	A46A A46B A46C A46D A46E
	01	B60A
93.87.B3‡↔	Prä	A46A A46B A46C A46D A46E
	01	B60A
93.87.B4‡↔	Prä	A46A A46B A46C A46D A46E
	01	B60A
93.87.C1‡↔	Prä	A46A A46B A46C A46D A46E
	01	B60A
93.87.C2‡↔	Prä	A46A A46B A46C A46D A46E
	01	B60A
93.87.C3‡↔	Prä	A46A A46B A46C A46D A46E
	01	B60A
93.87.C4‡↔	Prä	A46A A46B A46C A46D A46E
	01	B60A
93.87.D1‡↔	Prä	A46A A46B A46C A46D A46E
	01	B60A

CHOP	MDC	DRG
93.87.D2‡↔	Prä	A46A A46B A46C A46D A46E
	01	B60A
93.87.D3‡↔	Prä	A46A A46B A46C A46D A46E
	01	B60A
93.87.D4‡↔	Prä	A46A A46B A46C A46D A46E
	01	B60A
93.87.E1‡↔	Prä	A46A A46B A46C A46D A46E
	01	B60A
93.87.E2‡↔	Prä	A46A A46B A46C A46D A46E
	01	B60A
93.87.E3‡↔	Prä	A46A A46B A46C A46D A46E
	01	B60A
93.87.E4‡↔	Prä	A46A A46B A46C A46D A46E
	01	B60A
93.87.F1‡↔	Prä	A46A A46B A46C A46D A46E
	01	B60A
93.87.F2‡↔	Prä	A46A A46B A46C A46D A46E
	01	B60A
93.87.F3‡↔	Prä	A46A A46B A46C A46D A46E
	01	B60A
93.87.F4‡↔	Prä	A46A A46B A46C A46D A46E
	01	B60A
93.89.94‡↔		GFK 7
	01	B60A
93.89.95‡↔		GFK 14 GFK 7
	01	B60A
93.89.96‡↔		GFK 14 GFK 21 GFK 7
	01	B60A
93.8A.26‡↔	Prä	A97A A97B A97C A97D A97E
	01	B60A
93.8A.27‡↔	Prä	A11A A11B A11C A11D A97A A97B A97C A97D
	01	B60A
93.8A.28‡↔	Prä	A11A A11B A11C A11D A97A A97B A97C A97D
	01	B60A
93.8A.2A‡↔	Prä	A11A A11B A11C A11D A97A A97B A97C A97D
	01	B60A
93.8B.12‡↔	01	B60A B66A
	03	D60A
	04	E71A E71B
	06	G60A
	07	H61A
	09	J62A
	13	N60A
93.8B.13‡↔	01	B60A B66A
	03	D60A
	04	E71A
	06	G60A
	07	H61A
	09	J62A
	13	N60A
93.8B.14‡↔	01	B60A B66A
	03	D60A
	04	E71A
	06	G60A
	07	H61A
	09	J62A
	13	N60A
93.8B.15‡↔	01	B60A B66A
	03	D60A
	04	E71A
	06	G60A
	07	H61A
	09	J62A
	13	N60A
93.8B.22‡↔	Prä	A97A A97B A97C A97D A97E
	01	B60A
93.8B.23‡↔	Prä	A11A A11B A11C A11D A97A A97B A97C A97D
	01	B60A
93.8B.24‡↔	Prä	A11A A11B A11C A11D A97A A97B A97C A97D
	01	B60A
93.8B.25‡↔	Prä	A11A A11B A11C A11D A97A A97B A97C A97D
	01	B60A
93.8C.12‡↔		FR 7
	01	B60A
	Prä	A06A A06B A06C A07A
93.8C.13‡↔		FR 14 FR 7 HAK
	01	B60A
	Prä	A06A A06B A06C A07A A11A A11B A11C A11D
93.8C.14‡↔		FR 14 FR 7 HAK
	01	B60A B90A
	Prä	A06A A06B A06C A07A A11A A11B A11C A11D
93.8C.15‡↔		FR 14 FR 7 HAK
	01	B60A B90A
	Prä	A06A A06B A06C A07A A11A A11B A11C A11D
93.8C.16‡↔		FR 14 FR 7 HAK
	01	B60A B90A
	Prä	A06A A06B A06C A07A A11A A11B A11C A11D
93.8C.17‡↔		FR 14 FR 7 HAK
	01	B60A B90A
	Prä	A06A A06B A06C A07A A11A A11B A11C A11D
93.8C.18‡↔		FR 14 FR 7 HAK
	01	B60A B90A
	Prä	A06A A06B A06C A07A A11A A11B A11C A11D A43A
93.8C.1A‡↔		FR 14 FR 7 HAK
	01	B60A B90A
	Prä	A06A A06B A06C A07A A11A A11B A11C A11D A43A
93.8C.1B‡↔		FR 14 FR 7 HAK
	01	B60A B90A
	Prä	A06A A06B A06C A07A A11A A11B A11C A11D A43A
93.8C.1C‡↔		FR 14 FR 7 HAK
	01	B60A B90A
	Prä	A06A A06B A06C A07A A11A A11B A11C A11D A43A
93.8C.1D‡↔		FR 14 FR 7 HAK
	01	B60A B90A
	Prä	A06A A06B A06C A07A A11A A11B A11C A11D A43A
93.8C.1E‡↔		FR 14 FR 7 HAK
	01	B60A B90A
	Prä	A06A A06B A06C A07A A11A A11B A11C A11D A43A
93.8C.1F‡↔		FR 14 FR 7 HAK
	01	B60A B90A
	Prä	A06A A06B A06C A07A A11A A11B A11C A11D A43A
93.8C.1G‡↔		FR 14 FR 7 HAK
	01	B60A B90A
	Prä	A06A A06B A06C A07A A11A A11B A11C A11D A43A
93.8C.1H‡↔		FR 14 FR 7 HAK
	01	B60A B90A
	Prä	A06A A06B A06C A07A A11A A11B A11C A11D A43A
93.8C.1I‡↔		FR 14 FR 7 HAK
	01	B60A B90A
	Prä	A06A A06B A06C A07A A11A A11B A11C A11D A43A
93.8C.1J‡↔		FR 14 FR 7 HAK
	01	B60A B90A
	Prä	A06A A06B A06C A07A A11A A11B A11C A11D A43A
93.92.10‡↔	01	B60A
	06	G46A G46B
	15	P67A P67B P67C
93.92.11‡↔	01	B60A
	06	G46A G46B
	15	P67A P67B P67C
93.92.12‡↔	01	B60A
	06	G46A G46B
	15	P67A P67B P67C
93.92.13‡↔	01	B60A
	15	P67A P67B P67C
93.92.14‡↔	01	B60A
	15	P67A P67B P67C
93.92.15‡↔	01	B60A
	15	P67A P67B P67C
93.92.99‡↔	01	B60A
	15	P67A P67B P67C
93.97‡↔	01	B60A
	21B	X62A
93.9E.12‡↔	01	B60A
	04	E65A E70A E77A E77B
93.9E.13‡↔	01	B60A
	04	E65A E70A E77A E77B
93.9F.11‡↔	01	B60A
	15	P65A P66A P66B P67A P67B P67C

PROC

CHOP	MDC	DRG
93.9F.12‡↔	01	B60A
	04	E65A E70A E77A E77B
	15	MSPNG SPNG
93.9F.22‡↔	01	B60A
	04	E65A E70A E77A E77B
	15	MSPNG SPNG
93.9F.32‡↔	01	B60A
	04	E65A E70A E77A E77B
93.9G.21‡↔	01	B60A
	04	E78Z
	15	P65A P66A P66B P67A P67B P67C
93.9G.22‡↔	01	B60A
	04	E78Z
	15	P65A P66A P66B P67A P67B P67C
93.9G.41‡↔	01	B60A
	04	E78Z
	15	P65A P66A P66B P67A P67B P67C
93.9G.42‡↔	01	B60A
	04	E78Z
	15	P65A P66A P66B P67A P67B P67C
93.9G.72‡↔	Prä	A46C A46D A46E
	01	B60A
93.9G.73‡↔	Prä	A46C A46D A46E
	01	B60A
93.9G.74‡↔	Prä	A46C A46D A46E
	01	B60A
93.9G.75‡↔	Prä	A46C A46D A46E
	01	B60A
93.9G.76‡↔	Prä	A46C A46D A46E
	01	B60A
93.9G.77‡↔	Prä	A46C A46D A46E
	01	B60A
93.9G.78‡↔	Prä	A46C A46D A46E
	01	B60A
93.9G.7A‡↔	Prä	A46C A46D A46E
	01	B60A
93.9G.7B‡↔	Prä	A46C A46D A46E
	01	B60A
93.9G.7C‡↔	Prä	A46C A46D A46E
	01	B60A
93.9G.7D‡↔	Prä	A46C A46D A46E
	01	B60A
93.9G.7E‡↔	Prä	A46C A46D A46E
	01	B60A
93.9G.7F‡↔	Prä	A46C A46D A46E
	01	B60A
93.9G.7G‡↔	Prä	A46C A46D A46E
	01	B60A
93.9G.7H‡↔	Prä	A46C A46D A46E
	01	B60A
93.9G.7I‡↔	Prä	A46C A46D A46E
	01	B60A
93.A2.44‡↔	Prä	A92A A92B A92C
	01	B60A
93.A2.45‡↔	Prä	A92A A92B
	01	B60A
93.A2.46‡↔	Prä	A92A A92B
	01	B60A
93.A3.32‡↔		KP
	01	B60A
93.A3.33‡↔		KP
	01	B60A
	Prä	A97A
93.A3.34‡↔		KP
	01	B60A
	Prä	A97A
94.28‡↔	01	B60A
	19	U61A
94.29‡↔	01	B60A
	19	U41A U41B
94.30.01‡↔	01	B60A
	19	U41A U41B
94.30.02‡↔	01	B60A
	19	U41A U41B
94.30.03‡↔	01	B60A
	19	U41A U41B
94.35.11‡↔	01	B60A
	19	U66B
94.35.12‡↔	01	B60A
	19	U66B
94.35.13‡↔	01	B60A
	19	U66B
94.35.14‡↔	01	B60A
	19	U66B
94.35.21‡↔	01	B60A
	19	U41A U41B U66B
94.35.22‡↔	01	B60A
	19	U41A U41B U66B
94.35.23‡↔	01	B60A
	19	U41A U41B U66B
94.35.24‡↔	01	B60A
	19	U41A U41B U66B
94.39‡↔	01	B60A
	19	U41A U41B
94.3A.11‡↔	01	B60A
	19	U41A U41B U66B
94.3A.12‡↔	01	B60A
	19	U41A U41B U66B
94.3A.13‡↔	01	B60A
	19	U41A U41B U66B
94.3A.14‡↔	01	B60A
	19	U41A U41B U66B
94.3A.15‡↔	01	B60A
	19	U41A U41B U66B
94.3A.16‡↔	01	B60A
	19	U41A U41B U66B
94.3A.17‡↔	01	B60A
	19	U41A U41B U66B
94.3A.18‡↔	01	B60A
	19	U41A U41B U66B
94.3A.1A‡↔	01	B60A
	19	U41A U41B U66B
94.3A.1B‡↔	01	B60A
	19	U41A U41B U66B
94.3A.1C‡↔	01	B60A
	19	U41A U41B U66B
94.3A.1D‡↔	01	B60A
	19	U41A U41B U66B
94.3A.1E‡↔	01	B60A
	19	U41A U41B U66B
94.3A.21‡↔	01	B60A
	19	U41A U41B U66B
94.3A.22‡↔	01	B60A
	19	U41A U41B U66B
94.3A.23‡↔	01	B60A
	19	U41A U41B U66B
94.3A.24‡↔	01	B60A
	19	U41A U41B U66B
94.3A.25‡↔	01	B60A
	19	U41A U41B U66B
94.3A.26‡↔	01	B60A
	19	U41A U41B U66B
94.3A.27‡↔	01	B60A
	19	U41A U41B U66B
94.3A.28‡↔	01	B60A
	19	U41A U41B U66B
94.3A.2A‡↔	01	B60A
	19	U41A U41B U66B
94.3A.2B‡↔	01	B60A
	19	U41A U41B U66B
94.3A.2C‡↔	01	B60A
	19	U41A U41B U66B
94.3A.2D‡↔	01	B60A
	19	U41A U41B U66B
94.3A.2E‡↔	01	B60A
	19	U41A U41B U66B
94.3B.11‡↔	01	B60A
	19	U66B
94.3B.12‡↔	01	B60A
	19	U66B
94.3B.13‡↔	01	B60A
	19	U66B
94.3B.14‡↔	01	B60A
	19	U66B
94.3B.15‡↔	01	B60A
	19	U66B
94.3C.11‡↔	01	B60A
	19	U66B
94.3C.12‡↔	01	B60A
	19	U66B
94.3C.13‡↔	01	B60A
	19	U66B
94.3C.14‡↔	01	B60A
	19	U66B
94.3C.15‡↔	01	B60A
	19	U66B
94.3C.16‡↔	01	B60A
	19	U66B
94.3C.17‡↔	01	B60A
	19	U66B
94.3G.14‡↔	01	B60A
	19	U66A
94.3G.15‡↔	01	B60A
	19	U66A
94.3G.16‡↔	01	B60A
	19	U66A
94.3G.17‡↔	01	B60A
	19	U66A
94.3G.18‡↔	01	B60A
	19	U66A
94.3G.1A‡↔	01	B60A
	19	U66A
94.3G.1B‡↔	01	B60A
	19	U66A
94.3G.1C‡↔	01	B60A
	19	U66A
94.3G.1D‡↔	01	B60A
	19	U66A
94.3G.1E‡↔	01	B60A
	19	U66A
94.3G.1F‡↔	01	B60A
	19	U66A
94.3H.11‡↔	01	B60A
	19	U41A U41B U66B
94.3H.12‡↔	01	B60A
	19	U41A U41B U66B
94.3H.13‡↔	01	B60A
	19	U41A U41B U66B
94.3H.14‡↔	01	B60A
	19	U41A U41B U66B
94.3H.15‡↔	01	B60A
	19	U41A U41B U66B
94.7X.10‡↔	01	B60A

CHOP	MDC	DRG
	19	U41A
94.7X.11‡↔	01	B60A
	19	U41A
94.7X.12‡↔	01	B60A
	19	U41A
94.7X.20‡↔	01	B60A
	19	U41A
94.7X.21‡↔	01	B60A
	19	U41A
94.7X.22‡↔	01	B60A
	19	U41A
94.7X.23‡↔	01	B60A
	19	U41A
94.7X.30‡↔	01	B60A
	19	U41A
94.7X.99‡↔	01	B60A
	19	U41A U41B
94.8X.00‡↔	01	B60A
	19	U41A U41B
94.8X.10‡↔	01	B60A
	19	U41A U41B
94.8X.11‡↔	01	B60A
	19	U41A U41B
94.8X.12‡↔	01	B60A
	19	U41A U41B
94.8X.20‡↔	01	B60A
	19	U41A U41B
94.8X.21‡↔	01	B60A
	19	U41A U41B
94.8X.22‡↔	01	B60A
	19	U41A U41B
94.8X.30‡↔	01	B60A
	19	U41A U41B
94.8X.31‡↔	01	B60A
	19	U41A U41B
94.8X.32‡↔	01	B60A
	19	U41A U41B
94.8X.40‡↔	01	B60A
	19	U41A U41B
94.8X.41‡↔	01	B60A
	19	U41A U41B
94.8X.42‡↔	01	B60A
	19	U41A U41B
94.8X.50‡↔	01	B60A
	19	U41A U41B
94.8X.51‡↔	01	B60A
	19	U41A U41B
94.8X.52‡↔	01	B60A
	19	U41A U41B
94.8X.99‡↔	01	B60A
	19	U41A U41B
95.04‡↔	01	B60A
	02	C14Z
96.35‡↔	01	B60A
	15	P66B P66C P67A P67B P67C
96.3A‡↔	01	B60A
	06	G86A
96.6‡↔	01	B60A
	15	P66B P66C P67A P67B P67C
97.02‡↔	01	B60A
	04	E71B E75A E77A
	06	G46A G46B G46C G46D G72A G86C
97.03‡↔	01	B60A
	04	E71B E75A E77A
	06	G46A G46B G46C G46D G72A G86C
97.55‡↔	01	B60A
	04	E71B E75A E77A
	07	H41A H41B H41C H41D H86A
97.56‡↔	01	B60A
	04	E71B E75A E77A
	07	H41A H41B H41C H41D H86A
97.61‡↔	01	B60A
	11	L42A L60A L60C L63A L70B
97.62‡↔	01	B60A
	11	L42A L60A L60C L63A L63C L64B L70B
97.65‡↔	01	B60A
	11	L20A L20B L20C L20D L20E
	12	M06Z M09A M09B M37Z
98.02‡↔	01	B60A
	04	E71B E75A E77A
	06	G46A G46B G46C G46D G72A G86C
98.03‡↔	01	B60A
	04	E71B E75A E77A
	06	G46A G46B G46C G46D G72A G86C
98.04‡↔	01	B60A
	04	E71B E75A E77A
	06	G46A G46B G46C G46D G72A G86C
	07	H61A
98.05‡↔	01	B60A
	04	E71B E75A E77A
	06	G46A G46B G46C G46D G72A G86C
	07	H61A
98.51‡↔	01	B60A
	11	L13A L13B L13C L20C L38Z L42A L42B
98.52‡↔	01	B60A
	04	E71B E75A E77A
	07	H41A H41B H41C H41D H86A
98.53‡↔	01	B60A
	04	E71B E75A E77A
	07	H41A H41B H41C H41D H86A
98.59‡↔	01	B60A
	04	E71B E75A E77A
	07	H41A H41B H41C H41D H86A
99.01‡↔		KP KPP
	01	B60A
	15	P65B P66B P66C P67A P67B P67C
99.04.00‡↔	01	B60A
	15	P65B P66B P66C P67A P67B P67C
99.04.09‡↔	01	B60A
	15	P65B P66B P66C P67A P67B P67C
99.04.10‡↔	01	B60A
	14	O50A O50B O60A O60B
	15	P65B P66B P66C P67A P67B P67C
99.04.11‡↔		KP KPP
	01	B60A
	14	O50A O50B O60A O60B
	15	P65B P66B P66C P67A P67B P67C
99.04.12‡↔		KP KPP
	01	B60A
	14	O50A O50B O60A O60B
	15	P65B P66B P66C P67A P67B P67C
99.04.14‡↔		KP KPP
	01	B60A
	14	O50A O50B O60A O60B
	15	P65B P66B P66C P67A P67B P67C
99.04.15‡↔		KP KPP
	01	B60A
	14	O50A O50B O60A O60B
	15	P65B P66B P66C P67A P67B P67C
99.04.16‡↔		HAK KP KPP
	01	B60A
	14	O50A O50B O60A O60B
	15	P65B P66B P66C P67A P67B P67C
99.04.17‡↔		HAK KP KPP
	01	B60A
	14	O50A O50B O60A O60B
	15	P65B P66B P66C P67A P67B P67C
99.04.18‡↔		HAK KP KPP
	01	B60A
	14	O50A O50B O60A O60B
	15	P65B P66B P66C P67A P67B P67C
99.04.19‡↔		HAK KP KPP
	01	B60A
	14	O50A O50B O60A O60B
	15	P65B P66B P66C P67A P67B P67C
99.04.1A‡↔		HAK KP KPP
	01	B60A
	14	O50A O50B O60A O60B
	15	P65B P66B P66C P67A P67B P67C
99.04.1B‡↔		HAK KP KPP
	01	B60A
	14	O50A O50B O60A O60B
	15	P65B P66B P66C P67A P67B P67C
99.04.1C‡↔		HAK KP KPP
	01	B60A
	14	O50A O50B O60A O60B
	15	P65B P66B P66C P67A P67B P67C
99.04.1D‡↔		HAK KP KPP
	01	B60A
	14	O50A O50B O60A O60B
	15	P65B P66B P66C P67A P67B P67C

PROC

CHOP	MDC	DRG
99.04.1E‡↔		HAK KP KPP
	01	B60A
	14	O50A O50B O60A O60B
	15	P65B P66B P66C P67A P67B P67C
99.04.1F‡↔		HAK KP KPP
	01	B60A
	14	O50A O50B O60A O60B
	15	P65B P66B P66C P67A P67B P67C
99.04.1G‡↔		HAK KP KPP
	01	B60A
	14	O50A O50B O60A O60B
	15	P65B P66B P66C P67A P67B P67C
99.04.1H‡↔		HAK KP KPP
	01	B60A
	14	O50A O50B O60A O60B
	15	P65B P66B P66C P67A P67B P67C
99.04.1I‡↔		HAK KP KPP
	01	B60A
	14	O50A O50B O60A O60B
	15	P65B P66B P66C P67A P67B P67C
99.04.1J‡↔		HAK KP KPP
	01	B60A
	14	O50A O50B O60A O60B
	15	P65B P66B P66C P67A P67B P67C
99.04.1K‡↔		HAK KP KPP
	01	B60A
	14	O50A O50B O60A O60B
	15	P65B P66B P66C P67A P67B P67C
99.04.1L‡↔		HAK KP KPP
	01	B60A
	14	O50A O50B O60A O60B
	15	P65B P66B P66C P67A P67B P67C
99.04.1M‡↔		HAK KP KPP
	01	B60A
	14	O50A O50B O60A O60B
	15	P65B P66B P66C P67A P67B P67C
99.04.1N‡↔		HAK KP KPP
	01	B60A
	14	O50A O50B O60A O60B
	15	P65B P66B P66C P67A P67B P67C
99.04.1O‡↔		HAK KP KPP
	01	B60A
	14	O50A O50B O60A O60B
	15	P65B P66B P66C P67A P67B P67C
99.04.1P‡↔		HAK KP KPP
	01	B60A
	14	O50A O50B O60A O60B
	15	P65B P66B P66C P67A P67B P67C
99.04.21‡↔	01	B60A
	15	P65B P66B P66C P67A P67B P67C
99.04.22‡↔		KP KPP
	01	B60A
	15	P65B P66B P66C P67A P67B P67C
99.04.23‡↔		KP KPP
	01	B60A
	15	P65B P66B P66C P67A P67B P67C
99.04.24‡↔		KP KPP
	01	B60A
	15	P65B P66B P66C P67A P67B P67C
99.04.25‡↔		KP KPP
	01	B60A
	15	P65B P66B P66C P67A P67B P67C
99.04.26‡↔		HAK KP KPP
	01	B60A
	15	P65B P66B P66C P67A P67B P67C
99.04.27‡↔		HAK KP KPP
	01	B60A
	15	P65B P66B P66C P67A P67B P67C
99.04.28‡↔		HAK KP KPP
	01	B60A
	15	P65B P66B P66C P67A P67B P67C
99.04.2A‡↔		HAK KP KPP
	01	B60A
	15	P65B P66B P66C P67A P67B P67C
99.04.2B‡↔		HAK KP KPP
	01	B60A
	15	P65B P66B P66C P67A P67B P67C
99.04.2C‡↔		HAK KP KPP
	01	B60A
	15	P65B P66B P66C P67A P67B P67C
99.04.2D‡↔		HAK KP KPP
	01	B60A
	15	P65B P66B P66C P67A P67B P67C
99.04.2E‡↔		HAK KP KPP
	01	B60A
	15	P65B P66B P66C P67A P67B P67C
99.04.2F‡↔		HAK KP KPP
	01	B60A
	15	P65B P66B P66C P67A P67B P67C
99.04.2G‡↔		HAK KP KPP
	01	B60A
	15	P65B P66B P66C P67A P67B P67C
99.04.2H‡↔		HAK KP KPP
	01	B60A
	15	P65B P66B P66C P67A P67B P67C
99.04.2I‡↔		HAK KP KPP
	01	B60A
	15	P65B P66B P66C P67A P67B P67C
99.04.2J‡↔		HAK KP KPP
	01	B60A
	15	P65B P66B P66C P67A P67B P67C
99.04.2K‡↔		HAK KP KPP
	01	B60A
	15	P65B P66B P66C P67A P67B P67C
99.04.2L‡↔		HAK KP KPP
	01	B60A
	15	P65B P66B P66C P67A P67B P67C
99.04.2M‡↔		HAK KP KPP
	01	B60A
	15	P65B P66B P66C P67A P67B P67C
99.04.2N‡↔		HAK KP KPP
	01	B60A
	15	P65B P66B P66C P67A P67B P67C
99.04.2O‡↔		HAK KP KPP
	01	B60A
	15	P65B P66B P66C P67A P67B P67C
99.04.2P‡↔		HAK KP KPP
	01	B60A
	15	P65B P66B P66C P67A P67B P67C
99.04.2Q‡↔		HAK KP KPP
	01	B60A
	15	P65B P66B P66C P67A P67B P67C
99.04.31‡↔	01	B60A
	15	P65B P66B P66C P67A P67B P67C
99.04.32‡↔		KP KPP
	01	B60A
	15	P65B P66B P66C P67A P67B P67C
99.04.33‡↔		KP KPP
	01	B60A
	15	P65B P66B P66C P67A P67B P67C
99.04.34‡↔		KP KPP
	01	B60A
	15	P65B P66B P66C P67A P67B P67C
99.04.35‡↔		KP KPP
	01	B60A
	15	P65B P66B P66C P67A P67B P67C
99.04.36‡↔		HAK KP KPP
	01	B60A
	15	P65B P66B P66C P67A P67B P67C
99.05.45‡↔		KP KPP
	01	B60A
	15	P65B P66B P66C P67A P67B P67C
99.05.46‡↔		KP KPP
	01	B60A
	15	P65B P66B P66C P67A P67B P67C
99.05.47‡↔		KP KPP
	01	B60A
	15	P65B P66B P66C P67A P67B P67C
99.05.48‡↔		KP KPP
	01	B60A
	15	P65B P66B P66C P67A P67B P67C

CHOP	MDC	DRG
99.05.4A‡↔		KP KPP
	01	B60A
	15	P65B P66B P66C P67A P67B P67C
99.05.4B‡↔		KP KPP
	01	B60A
	15	P65B P66B P66C P67A P67B P67C
99.05.4C‡↔		KP KPP
	01	B60A
	15	P65B P66B P66C P67A P67B P67C
99.05.4D‡↔		KP KPP
	01	B60A
	15	P65B P66B P66C P67A P67B P67C
99.05.4E‡↔		KP KPP
	01	B60A
	15	P65B P66B P66C P67A P67B P67C
99.05.4F‡↔		HAK KP KPP
	01	B60A
	15	P65B P66B P66C P67A P67B P67C
99.05.4G‡↔		HAK KP KPP
	01	B60A
	15	P65B P66B P66C P67A P67B P67C
99.05.4H‡↔		HAK KP KPP
	01	B60A
	15	P65B P66B P66C P67A P67B P67C
99.05.4I‡↔		HAK KP KPP
	01	B60A
	15	P65B P66B P66C P67A P67B P67C
99.05.4J‡↔		HAK KP KPP
	01	B60A
	15	P65B P66B P66C P67A P67B P67C
99.05.4K‡↔		HAK KP KPP
	01	B60A
	15	P65B P66B P66C P67A P67B P67C
99.05.4L‡↔		HAK KP KPP
	01	B60A
	15	P65B P66B P66C P67A P67B P67C
99.05.4M‡↔		HAK KP KPP
	01	B60A
	15	P65B P66B P66C P67A P67B P67C
99.05.4N‡↔		HAK KP KPP
	01	B60A
	15	P65B P66B P66C P67A P67B P67C
99.05.4O‡↔		HAK KP KPP
	01	B60A
	15	P65B P66B P66C P67A P67B P67C
99.05.4P‡↔		HAK KP KPP
	01	B60A
	15	P65B P66B P66C P67A P67B P67C
99.05.4Q‡↔		HAK KP KPP
	01	B60A
	15	P65B P66B P66C P67A P67B P67C
99.05.4R‡↔		HAK KP KPP
	01	B60A
	15	P65B P66B P66C P67A P67B P67C
99.05.4S‡↔		HAK KP KPP
	01	B60A
	15	P65B P66B P66C P67A P67B P67C
99.05.4T‡↔		HAK KP KPP
	01	B60A
	15	P65B P66B P66C P67A P67B P67C
99.05.4U‡↔		HAK KP KPP
	01	B60A
	15	P65B P66B P66C P67A P67B P67C
99.05.4V‡↔		HAK KP KPP
	01	B60A
	15	P65B P66B P66C P67A P67B P67C
99.05.4W‡↔		HAK KP KPP
	01	B60A
	15	P65B P66B P66C P67A P67B P67C
99.05.51‡↔		HAK KP KPP
	01	B60A
	15	P65B P66B P66C P67A P67B P67C
99.05.52‡↔		HAK KP KPP
	01	B60A
	15	P65B P66B P66C P67A P67B P67C
99.05.53‡↔		HAK KP KPP
	01	B60A
	15	P65B P66B P66C P67A P67B P67C
99.05.54‡↔		HAK KP KPP
	01	B60A
	15	P65B P66B P66C P67A P67B P67C
99.05.55‡↔		HAK KP KPP
	01	B60A
	15	P65B P66B P66C P67A P67B P67C
99.05.57‡↔		HAK KP KPP
	01	B60A
	15	P65B P66B P66C P67A P67B P67C
99.05.58‡↔		HAK KP KPP
	01	B60A
	15	P65B P66B P66C P67A P67B P67C
99.05.5A‡↔		HAK KP KPP
	01	B60A
	15	P65B P66B P66C P67A P67B P67C
99.05.5B‡↔		HAK KP KPP
	01	B60A
	15	P65B P66B P66C P67A P67B P67C
99.05.5C‡↔		HAK KP KPP
	01	B60A
	15	P65B P66B P66C P67A P67B P67C
99.05.5D‡↔		HAK KP KPP
	01	B60A
	15	P65B P66B P66C P67A P67B P67C
99.05.5E‡↔		HAK KP KPP
	01	B60A
	15	P65B P66B P66C P67A P67B P67C
99.05.5F‡↔		HAK KP KPP
	01	B60A
	15	P65B P66B P66C P67A P67B P67C
99.05.5G‡↔		HAK KP KPP
	01	B60A
	15	P65B P66B P66C P67A P67B P67C
99.05.5H‡↔		HAK KP KPP
	01	B60A
	15	P65B P66B P66C P67A P67B P67C
99.05.5I‡↔		HAK KP KPP
	01	B60A
	15	P65B P66B P66C P67A P67B P67C
99.05.5J‡↔		HAK KP KPP
	01	B60A
	15	P65B P66B P66C P67A P67B P67C
99.05.5K‡↔		HAK KP KPP
	01	B60A
	15	P65B P66B P66C P67A P67B P67C
99.05.5L‡↔		HAK KP KPP
	01	B60A
	15	P65B P66B P66C P67A P67B P67C
99.05.5M‡↔		HAK KP KPP
	01	B60A
	15	P65B P66B P66C P67A P67B P67C
99.05.5N‡↔		HAK KP KPP
	01	B60A
	15	P65B P66B P66C P67A P67B P67C
99.05.61‡↔	01	B60A
	15	P65B P66B P66C P67A P67B P67C
99.05.62‡↔	01	B60A
	15	P65B P66B P66C P67A P67B P67C
99.05.63‡↔	01	B60A
	15	P65B P66B P66C P67A P67B P67C
99.05.64‡↔		KP KPP
	01	B60A
	15	P65B P66B P66C P67A P67B P67C
99.05.65‡↔		KP KPP
	01	B60A
	15	P65B P66B P66C P67A P67B P67C
99.05.66‡↔		KP KPP
	01	B60A
	15	P65B P66B P66C P67A P67B P67C
99.05.67‡↔		KP KPP
	01	B60A
	15	P65B P66B P66C P67A P67B P67C
99.05.68‡↔		KP KPP
	01	B60A
	15	P65B P66B P66C P67A P67B P67C
99.05.6A‡↔		KP KPP
	01	B60A
	15	P65B P66B P66C P67A P67B P67C
99.05.6B‡↔		KP KPP

PROC

CHOP	MDC	DRG
	01	B60A
	15	P65B P66B P66C P67A P67B P67C
99.05.6C‡↔		KP KPP
	01	B60A
	15	P65B P66B P66C P67A P67B P67C
99.05.6D‡↔		KP KPP
	01	B60A
	15	P65B P66B P66C P67A P67B P67C
99.05.6E‡↔		KP KPP
	01	B60A
	15	P65B P66B P66C P67A P67B P67C
99.05.6F‡↔		HAK KP KPP
	01	B60A
	15	P65B P66B P66C P67A P67B P67C
99.05.6G‡↔		HAK KP KPP
	01	B60A
	15	P65B P66B P66C P67A P67B P67C
99.05.6H‡↔		HAK KP KPP
	01	B60A
	15	P65B P66B P66C P67A P67B P67C
99.05.6I‡↔		HAK KP KPP
	01	B60A
	15	P65B P66B P66C P67A P67B P67C
99.05.6J‡↔		HAK KP KPP
	01	B60A
	15	P65B P66B P66C P67A P67B P67C
99.05.6K‡↔		HAK KP KPP
	01	B60A
	15	P65B P66B P66C P67A P67B P67C
99.05.6L‡↔		HAK KP KPP
	01	B60A
	15	P65B P66B P66C P67A P67B P67C
99.05.6M‡↔		HAK KP KPP
	01	B60A
	15	P65B P66B P66C P67A P67B P67C
99.05.6N‡↔		HAK KP KPP
	01	B60A
	15	P65B P66B P66C P67A P67B P67C
99.05.6O‡↔		HAK KP KPP
	01	B60A
	15	P65B P66B P66C P67A P67B P67C
99.05.6P‡↔		HAK KP KPP
	01	B60A
	15	P65B P66B P66C P67A P67B P67C
99.05.6Q‡↔		HAK KP KPP
	01	B60A
	15	P65B P66B P66C P67A P67B P67C
99.05.6R‡↔		HAK KP KPP
	01	B60A
	15	P65B P66B P66C P67A P67B P67C
99.05.6S‡↔		HAK KP KPP
	01	B60A
	15	P65B P66B P66C P67A P67B P67C
99.07.00‡↔	01	B60A
	15	P65B P66B P66C P67A P67B P67C
99.07.09‡↔	01	B60A
	15	P65B P66B P66C P67A P67B P67C
99.07.21‡↔	01	B60A
	15	P65B P66B P66C P67A P67B P67C
99.07.22‡↔	01	B60A
	15	P65B P66B P66C P67A P67B P67C
99.07.23‡↔	01	B60A
	15	P65B P66B P66C P67A P67B P67C
99.07.24‡↔	01	B60A
	15	P65B P66B P66C P67A P67B P67C
99.07.25‡↔	01	B60A
	15	P65B P66B P66C P67A P67B P67C
99.07.26‡↔	01	B60A
	15	P65B P66B P66C P67A P67B P67C
99.07.27‡↔	01	B60A
	15	P65B P66B P66C P67A P67B P67C
99.07.28‡↔	01	B60A
	15	P65B P66B P66C P67A P67B P67C
99.07.2A‡↔	01	B60A
	15	P65B P66B P66C P67A P67B P67C
99.07.2B‡↔	01	B60A
	15	P65B P66B P66C P67A P67B P67C
99.07.2C‡↔	01	B60A
	15	P65B P66B P66C P67A P67B P67C
99.07.31‡↔	01	B60A
	15	P65B P66B P66C P67A P67B P67C
99.07.32‡↔	01	B60A
	15	P65B P66B P66C P67A P67B P67C
99.07.33‡↔	01	B60A
	15	P65B P66B P66C P67A P67B P67C
99.07.34‡↔	01	B60A
	15	P65B P66B P66C P67A P67B P67C
99.07.35‡↔	01	B60A
	15	P65B P66B P66C P67A P67B P67C
99.07.36‡↔		KP KPP
99.07.37‡↔	01	B60A
	15	P65B P66B P66C P67A P67B P67C
99.07.38‡↔		KP KPP
	01	B60A
	15	P65B P66B P66C P67A P67B P67C
99.07.3A‡↔		KP KPP
	01	B60A
	15	P65B P66B P66C P67A P67B P67C
99.07.3B‡↔		KP KPP
	01	B60A
	15	P65B P66B P66C P67A P67B P67C
99.07.3C‡↔		KP KPP
	01	B60A
	15	P65B P66B P66C P67A P67B P67C
99.08‡↔	01	B60A
	15	P65B P66B P66C P67A P67B P67C
99.09.10‡↔		KP
	01	B60A
	15	P65B P66B P66C P67A P67B P67C
99.09.12‡↔		KP
	01	B60A
	15	P65B P66B P66C P67A P67B P67C
99.09.13‡↔		KP
	01	B60A
	15	P65B P66B P66C P67A P67B P67C
99.09.14‡↔		KP
	01	B60A
	15	P65B P66B P66C P67A P67B P67C
99.09.15‡↔		KP
	01	B60A
	15	P65B P66B P66C P67A P67B P67C
99.09.20‡↔		KP
	01	B60A
	15	P65B P66B P66C P67A P67B P67C
99.09.23‡↔		KP
	01	B60A
	15	P65B P66B P66C P67A P67B P67C
99.09.24‡↔		KP
	01	B60A
	15	P65B P66B P66C P67A P67B P67C
99.09.25‡↔		KP
	01	B60A
	15	P65B P66B P66C P67A P67B P67C
99.09.30‡↔		KP
	01	B60A
	15	P65B P66B P66C P67A P67B P67C
99.0A‡↔	01	B60A
	15	P65B P66B P66C P67A P67B P67C
99.10.16‡↔	01	B60A B70B B70D

CHOP	MDC	DRG
		B70H
99.10.17‡↔	01	B60A B70B B70D
99.10.18‡↔	01	B60A B70B B70D
99.10.1A‡↔	01	B60A B70B B70D
99.10.1B‡↔	01	B60A B70B B70D
99.15‡↔	01	B60A
	15	P65B P66B P66C
		P67A P67B P67C
99.18‡↔	01	B60A
	15	P65B P66B P66C
		P67A P67B P67C
99.1A‡↔	01	B60A
	15	P65B P66B P66C
		P67A P67B P67C
99.22.16‡↔	01	B60A
	15	P66B P66C P67A
		P67B P67C
99.22.17‡↔	01	B60A
	15	P66B P66C P67A
		P67B P67C
99.22.18‡↔	01	B60A
	15	P66B P66C P67A
		P67B P67C
99.22.1A‡↔	01	B60A
	09	J64A
	15	P66B P66C P67A
		P67B P67C
99.22.1B‡↔		KP
	01	B60A
	09	J64A
	15	P66B P66C P67A
		P67B P67C
99.25.21‡↔		KP KPP MKOR
	01	B60A
	06	G37Z
	17	R50A R60A R60B
	Prä	A93A A97A A97B
		A97C A97D
99.25.22‡↔		KP KPP MKOR
	01	B60A
	17	R50A R60A R60B
	Prä	A93A A97A A97B
		A97C A97D
99.25.23‡↔		KP KPP MKOR
	01	B60A
	17	R50A R60A R60B
	Prä	A93A A97A A97B
		A97C A97D
99.25.24‡↔		KP KPP MKOR
	01	B60A
	17	R50A R60A R60B
	Prä	A93A A97A A97B
		A97C A97D
99.25.25‡↔		KP KPP MKOR
	01	B60A
	17	R50A R60A R60B
	Prä	A93A A97A A97B
		A97C A97D
99.25.51‡↔	Prä	A93A A97A A97B
		A97C A97D
	01	B60A
	17	R50A R60A R60B
99.25.52‡↔		AKBB KPP MKOR
	01	B60A
	04	E71A E86A
	08	I61A
	17	R01A R01B R50A
		R60A R60B
	Prä	A15A A93A A97A
		A97B A97C A97D
99.25.53‡↔		AKBB KPP MKOR
	01	B60A
	04	E71A
	08	I61A I65A
	17	R01A R01B R50A
		R50B R50C R60A
		R60B R63C
	Prä	A04A A04B A15A
		A15B A93A A97A
		A97B A97C A97D
99.25.54‡↔		AKBB KPP MKOR
	01	B60A
	04	E71A
	08	I61A I65A
	17	R01A R01B R50A
		R50B R50C R60A
		R60B
	Prä	A04A A04B A15A
		A15B A93A A97A
		A97B A97C A97D
99.28.01‡↔		KP KPP
	01	B60A
	17	R50A R60A R60B
	Prä	A93A A97A A97B
		A97C A97D
99.28.02‡↔		KP KPP
	01	B60A
	17	R50A R60A R60B
	Prä	A93A A97A A97B
		A97C A97D
99.28.03‡↔		KP KPP
	01	B60A
	17	R50A R60A R60B
	Prä	A93A A97A A97B
		A97C A97D
99.28.04‡↔		KP KPP
	01	B60A
	17	R50A R60A R60B
	Prä	A93A A97A A97B
		A97C A97D
99.28.05‡↔		KP KPP
	01	B60A
	17	R50A R60A R60B
	Prä	A93A A97A A97B
		A97C A97D
99.28.06‡↔		KP KPP
	01	B60A
	17	R50A R60A R60B
	Prä	A93A A97A A97B
		A97C A97D
99.28.07‡↔		KP KPP
	01	B60A
	17	R50A R60A R60B
	Prä	A93A A97A A97B
		A97C A97D
99.28.08‡↔	Prä	A93A A97A A97B
		A97C A97D
	01	B60A
	17	R50A R60A R60B
99.28.11‡↔	01	B60A B71A B71B
		B72A
	04	E71A
	09	J61B
	10	K64A K86A
99.28.12‡↔	01	B60A B71A B71B
		B72A
	04	E71A
	09	J61B
	10	K64A K86A
99.28.13‡↔	01	B60A B71A B71B
		B72A
	04	E71A
	09	J61B
	10	K64A K86A
99.2B.11‡↔	01	B60A B67A B67B
99.2B.12‡↔	01	B60A B67A
99.60‡↔	01	B60A
	05	F62A
99.63‡↔	01	B60A
	05	F62A
99.71.00‡↔	Prä	A91Z
	01	B60A
	11	L37A L37B
99.71.12‡↔		KP KPP
	01	B60A B68A
	11	L37A L37B
	Prä	A91Z
99.71.13‡↔		KP KPP
	01	B60A
	11	L37A L37B
	Prä	A91Z
99.71.99‡↔		KP KPP
	01	B60A
	11	L37A L37B
	Prä	A91Z
99.72.11‡↔		KP KPP
	01	B60A
	11	L37A L37B
	Prä	A91Z
99.72.21‡↔	01	B60A
	23	Z43Z
99.73‡↔		KP KPP
	01	B60A
	11	L37A L37B
	Prä	A91Z
99.74‡↔		KP KPP
	01	B60A
	11	L37A L37B
	Prä	A91Z
99.76.00‡↔		KP
	01	B60A
	11	L37A L37B
	Prä	A91Z
99.76.09‡↔		KP KPP
	01	B60A
	11	L37A L37B
	Prä	A91Z
99.76.10‡↔		KP KPP
	01	B60A
	11	L37A L37B
	Prä	A91Z
99.76.11‡↔		KP KPP
	01	B60A
	11	L37A L37B
	Prä	A91Z
99.76.20‡↔		KP KPP
	01	B60A
	11	L37A L37B
	Prä	A91Z
99.76.31‡↔		KP KPP
	01	B60A
	11	L37A L37B
	Prä	A91Z
99.78‡↔	Prä	A91Z
	01	B60A
	11	L37A L37B
99.79.00‡↔	Prä	A91Z
	01	B60A
	11	L37A L37B
99.79.11‡↔		KP KPP

PROC

CHOP	MDC	DRG
	01	B60A
	11	L37A L37B
	Prä	A91Z
99.79.21‡↔		KP KPP
	01	B60A
	11	L37A L37B
	Prä	A91Z
99.81.20‡↔	01	B60A
	15	P05A P05B P05C
		P05D P66A P66B
		P66C
99.83‡↔	01	B60A
	15	P65B P66B P66C
		P67A P67B P67C
99.84.15‡↔	01	B60A
	15	P67C
99.84.16‡↔	Prä	A95F
	01	B60A B70D
	03	D62A
	04	E60A E64A E65A
		E70A E71A E71B
		E75A E75B E77A
		E87A
	05	F62A
	09	J64C
	15	P67A
	18B	T01C T60A T60B
		T60C T61A T63A
		T64A
	22	Y02A
99.84.17‡↔	Prä	A95F
	01	B60A B70D
	03	D62A
	04	E60A E64A E65A
		E70A E71A E75A
		E75B E77A E87A
	05	F04Z F13A F13B
		F62A
	09	J64C
	11	L63A
	15	P67A
	18B	T01C T60A T61A
		T63A T64A
	22	Y02A
99.84.1A‡↔	Prä	A95F
	01	B60A B70D
	03	D62A
	04	E60A E64A E65A
		E70A E71A E75A
		E75B E77A E87A
	05	F04Z F13A F13B
		F62A
	09	J64C
	11	L63A
	15	P67A
	18B	T01C T60A T61A
		T63A T64A
	22	Y02A
99.84.1B‡↔	Prä	A95F
	01	B60A B70D
	03	D62A
	04	E60A E64A E65A
		E70A E71A E75A
		E75B E77A E87A
	05	F04Z F13A F13B
		F62A
	09	J64C
	11	L63A
	15	P67A
	18B	T01C T60A T61A

CHOP	MDC	DRG
		T63A T64A
	22	Y02A
99.84.1C‡↔	Prä	A95F
	01	B60A B70D
	03	D62A
	04	E60A E64A E65A
		E70A E71A E75A
		E75B E77A E87A
	05	F04Z F13A F13B
		F62A
	09	J64C
	11	L63A
	15	P67A
	18B	T01C T60A T61A
		T63A T64A
	22	Y02A
99.84.1D‡↔	Prä	A95F
	01	B60A B70D
	03	D62A
	04	E60A E64A E65A
		E70A E71A E75A
		E75B E77A E87A
	05	F04Z F13A F13B
		F62A
	09	J64C
	11	L63A
	15	P67A
	18B	T01C T60A T61A
		T63A T64A
	22	Y02A
99.84.1E‡↔	Prä	A95F
	01	B60A B70D
	03	D62A
	04	E60A E64A E65A
		E70A E71A E75A
		E75B E77A E87A
	05	F04Z F13A F13B
		F62A
	09	J64C
	11	L63A
	15	P67A
	18B	T01C T60A T61A
		T63A T64A
	22	Y02A
99.84.1F‡↔	Prä	A95F
	01	B60A B70D
	03	D62A
	04	E60A E64A E65A
		E70A E71A E75A
		E75B E77A E87A
	05	F04Z F13A F13B
		F62A
	09	J64C
	11	L63A
	15	P67A
	18B	T01C T60A T61A
		T63A T64A
	22	Y02A
99.84.25‡↔	01	B60A
	15	P67C
99.84.26‡↔	01	B60A
	15	P67C
99.84.27‡↔	01	B60A
	15	P67C
99.84.2A‡↔	01	B60A
	15	P67C
99.84.2B‡↔	01	B60A
	15	P67C
99.84.2C‡↔	01	B60A
	15	P67C

CHOP	MDC	DRG
99.84.2D‡↔	01	B60A
	15	P67C
99.84.2E‡↔	01	B60A
	15	P67C
99.84.2F‡↔	01	B60A
	15	P67C
99.84.35‡↔	01	B60A
	15	P67C
99.84.36‡↔	01	B60A
	15	P67C
99.84.37‡↔	01	B60A
	15	P67C
99.84.3A‡↔	01	B60A
	15	P67C
99.84.3B‡↔	01	B60A
	15	P67C
99.84.3C‡↔	01	B60A
	15	P67C
99.84.3D‡↔	01	B60A
	15	P67C
99.84.3E‡↔	01	B60A
	15	P67C
99.84.3F‡↔	01	B60A
	15	P67C
99.84.45‡↔	01	B60A
	15	P67C
99.84.46‡↔	01	B60A
	15	P67C
99.84.47‡↔	01	B60A
	15	P67C
99.84.4A‡↔	01	B60A
	15	P67C
99.84.4B‡↔	01	B60A
	15	P67C
99.84.4C‡↔	01	B60A
	15	P67C
99.84.4D‡↔	01	B60A
	15	P67C
99.84.4E‡↔	01	B60A
	15	P67C
99.84.4F‡↔	01	B60A
	15	P67C
99.84.55‡↔	01	B60A
	15	P67C
99.84.56‡↔	Prä	A15A A15B
	01	B60A
	04	E71A E71B
	15	P67C
	16	Q60A
	17	R60C R61A R61B
		R61C
99.84.57‡↔	Prä	A15A A15B
	01	B60A
	04	E71A
	15	P67C
	16	Q60A
	17	R50A R50B R50C
		R60C R61A R61B
		R61C
99.84.5A‡↔	Prä	A15A A15B
	01	B60A
	04	E71A
	15	P67C
	16	Q60A
	17	R50A R50B R50C
		R60C R61A R61B
		R61C
99.84.5B‡↔	Prä	A15A A15B
	01	B60A
	04	E71A

CHOP	MDC	DRG
	15	P67C
	16	Q60A
	17	R50A R50B R50C R60C R61A R61B R61C
99.84.5C‡↔	Prä	A04A A04B A15A A15B
	01	B60A
	04	E71A
	15	P67C
	16	Q60A
	17	R50A R50B R50C R60C R61A R61B R61C
99.84.5D‡↔	Prä	A04A A04B A15A A15B
	01	B60A
	04	E71A
	15	P67C
	16	Q60A
	17	R50A R50B R50C R60C R61A R61B R61C
99.84.5E‡↔	Prä	A04A A04B A15A A15B
	01	B60A
	04	E71A
	15	P67C
	16	Q60A
	17	R50A R50B R50C R60C R61A R61B R61C
99.84.5F‡↔	Prä	A04A A04B A15A A15B
	01	B60A
	04	E71A
	15	P67C
	16	Q60A
	17	R50A R50B R50C R60C R61A R61B R61C
99.88‡↔		KP KPP
	01	B60A
	11	L37A L37B
	Prä	A91Z
99.A0.11‡↔		AKBB KP
	01	B60A
	17	R61A R61B R61C R63C R65A
99.A0.12‡↔		AKBB KP
	01	B60A
	17	R61A R61B R61C R63C R65A
99.A1.11‡↔		KP
	01	B60A
	17	R65A
99.A1.12‡↔		KP
	01	B60A
	17	R65A
99.A1.13‡↔		KP
	01	B60A
	17	R65A
99.A2.11‡↔		AKBB
	01	B60A
	15	P05A P05B P05C P05D P66A P66B P66C
99.A3.11‡↔	01	B60A B76A B76B B76C
	15	P05A P05B P05C P05D P66A P66B P66C
99.A3.12‡↔		AKBB
	01	B60A B76A B76B B76C
	15	P05A P05B P05C P05D P66A P66B P66C
99.A3.13‡↔		AKBB
	01	B60A B76A B76B B76C
	15	P05A P05B P05C P05D P66A P66B P66C
99.A4‡↔	01	B60A
	15	P67C
99.A5.31‡↔	01	B60A
	15	P05A P05B P05C P05D P66A P66B P66C P67C
99.A6.11‡↔	01	B60A B63A B68A B71A B72A B76F B76G B77A B81A B81B B85A
	02	C61A
	03	D61A
	19	U60B U64A
99.A6.12‡↔		AKBB
	01	B60A B63A B68A B71A B72A B76F B76G B77A B81A B81B B85A
	02	C61A
	03	D61A
	19	U60B U64A
99.A6.13‡↔		AKBB
	01	B60A B63A B68A B71A B72A B76F B76G B77A B81A B81B B85A
	02	C61A
	03	D61A
	19	U60B U64A
99.A7‡↔	01	B60A B63A B68A B69B B70A B70B B70C B71A B72A B76F B76G B77A B81A B81B B85A
	02	C61A
	03	D61A
	19	U60B U64A
99.A8.12‡↔	01	B60A
	15	P60B P66B P67A
99.A8.13‡↔	01	B60A
	15	P60B P66B P67A
99.A8.14‡↔	01	B60A
	15	P60B P66B P67A
99.AA.11‡↔		AKBB
	01	B60A
99.B1.17‡↔	01	B60A
	07	H37A H37B
99.B1.18‡↔		HAK
	01	B60A
	07	H37A H37B
99.B1.1A‡↔		HAK
	01	B60A
	07	H37A
99.B1.1B‡↔		HAK
	01	B60A
	07	H37A
99.B1.1C‡↔		HAK
	01	B60A
	07	H37A
99.B1.1D‡↔		HAK
	01	B60A
	07	H37A
99.B1.1E‡↔		HAK
	01	B60A
	07	H37A
99.B1.1F‡↔		HAK
	01	B60A
	07	H37A
99.B1.1G‡↔		HAK
	01	B60A
	07	H37A
99.B1.1H‡↔		HAK
	01	B60A
	07	H37A
99.B3.17‡↔	01	B60A B76A B76B B76C B76D B76E B76F B76G B76H
99.B3.18‡↔		HAK
	01	B60A B76A B76B B76C B76D B76E B76F B76G B76H
99.B3.1A‡↔		HAK
	01	B60A B76A B76B B76C B76D B76E B76F B76G B76H
99.B4.14‡↔	01	B60A B67A B67B
99.B4.15‡↔		HAK
	01	B21A B21B B60A B67A B67B
99.B4.16‡↔		HAK
	01	B21A B21B B60A B67A B67B
99.B5.09‡↔	01	B60A
	10	K64B
99.B5.10‡↔	01	B60A
	10	K64B
99.B5.21‡↔	01	B60A
	10	K64A
99.B5.22‡↔	01	B60A
	10	K64A
99.B5.34‡↔	01	B60A
	10	K60A
99.B5.35‡↔	01	B60A
	10	K60A
99.B5.36‡↔	01	B60A
	10	K60A
99.B6.26‡↔		KP
	01	B60A B71A B71B
	08	I02A I02B I02C I32A
	Prä	A46C A46D B61B B61C
99.B6.27‡↔		KP
	01	B60A B71A B71B
	08	I02A I02B I02C I32A
	Prä	A46C A46D B61B B61C
99.B6.28‡↔		KP
	01	B60A B71A B71B
	08	I02A I02B I02C I32A
	Prä	A46C A46D B61B B61C
99.B6.35‡↔	01	B60A
	08	I73A

PROC

PROC

CHOP	MDC	DRG
99.B6.36‡↔	01	B60A
	05	F04Z F13A F13B
	08	I73A
99.B6.37‡↔	01	B60A
	05	F04Z F13A F13B
		F75A
	08	I73A
99.B6.38‡↔	01	B60A
	05	F04Z F13A F13B
		F75A
	08	I73A
99.B7.11‡↔	01	B60A B70H B77A
		B78A B80A B86A
	04	E87A E87B
	05	F49E F62C F73A
	06	G46B G86B
	14	O02A
	19	U60A
	21B	X62A X86B
	23	Z86A
99.B7.12‡↔		KP
	01	B01A B02A B03A
		B09A B20A B20B
		B20C B60A B76A
		B76B B76C B87A
		B87B
	03	D87Z
	04	E02A E87A E87B
		E90A E90B E90C
	05	F41A F49E F59E
		F66A F67A F70A
		F73A F86A F87Z
	06	G09A G12A G21B
		G22A G67A G87A
		G87B
	07	H07A H41A H87Z
	08	I02A I02B I02C
		I10B I12A
	09	J87Z
	10	K06A K87Z
	11	L18B L87Z
	12	M38A M38B
	13	N01B N02A N04A
		N33Z
	14	O38A O38B
	16	Q37A Q37B
	17	R01A
	18B	T60A T60B T60C
		T60F T60G
	19	U60A U61A
	20	V02A
	21A	W60A W60B
	21B	X37A X37B X86A
	22	Y02A Y02B
	23	Z02Z
	Prä	A94A A94B A94C
		A95C A95D A97A
		A97B B61B B61C
		B61D
99.B7.13‡↔		KP
	01	B01A B02A B03A
		B09A B20A B60A
		B76A B76B B76C
		B87A B90A B90B
	03	D02A D37A D37B
		D87Z
	04	E02A E33A E36A
		E36B E36C E36D
		E87A E87B E90A
		E90B E90C

CHOP	MDC	DRG
	05	F03B F03C F04Z
		F06A F31A F31B
		F31C F37A F37B
		F73A F86A F87Z
		F90A F90B F90C
	06	G03A G09A G12A
		G13A G16A G21B
		G22A G37Z G38A
		G38B G38C G67A
		G87A
	07	H01A H33Z H37A
		H37B H87Z
	08	I02A I02B I02C
		I06A I06B I08A
		I09A I09B I10A
		I12A I13A I29B
		I31A I43A I46A
		I87A I87B I95A
		I95B
	09	J33Z J87Z
	10	K37A K37B K87Z
	11	L37A L37B L87Z
	12	M38A
	13	N01B N02A N04A
		N33Z
	14	O38A
	16	Q37A
	17	R01A R61A
	18B	T01A T60A T60B
		T60C T60F
	19	U60A U61A U66A
	20	V01Z
	21A	W01A W01B W01C
		W01D W60A W60B
		W61A
	21B	X37A X86A
	22	Y02A Y02B
	23	Z02Z
	Prä	A46C A46D A90A
		A90B A90C A93A
		A94A A94B A94C
		A95A A95C A95D
		A97A A97B B61A
		B61B B61C B61D
99.B7.14‡↔		KP
	01	B01A B02A B03A
		B09A B20A B36A
		B36B B36C B36D
		B60A B76A B76B
		B76C B87A B90A
		B90B
	03	D02A D37A D37B
		D87Z
	04	E02A E33A E36A
		E36B E36C E87A
		E87B E90A E90B
		E90C
	05	F03B F03C F04Z
		F06A F31A F31B
		F31C F36A F36B
		F36C F36D F36E
		F37A F37B F73A
		F86A F87Z F90A
		F90B F90C F98A
	06	G03A G09A G12A
		G13A G16A G21B
		G22A G37Z G38A
		G38B G38C G67A
		G87A
	07	H01A H01B H01C

CHOP	MDC	DRG
		H33Z H37A H87Z
	08	I02A I02B I02C
		I06A I06B I08A
		I09A I09B I10A
		I12A I13A I29B
		I31A I43A I46A
		I87A I95A I95B
	09	J33Z J87Z
	10	K37A K37B K87Z
	11	L37A L37B L87Z
	12	M38A
	13	N01B N02A N04A
		N33Z
	14	O38A
	16	Q37A
	17	R01A R50A R50B
		R50C R60B R61A
	18B	T01A T01C T36A
		T36B T36C T60A
		T60B T60C T60F
	19	U60A U61A U66A
	20	V01Z
	21A	W01A W01B W01C
		W01D W60A W60B
		W61A
	21B	X37A X86A
	22	Y02A Y02B
	23	Z02Z
	Prä	A04A A04B A15A
		A15B A46A A46B
		A46C A46D A90A
		A90B A90C A93A
		A94A A94B A94C
		A95A A95B A95C
		A95D A97A A97B
		A97C A97D B61A
		B61B B61C B61D
99.B7.15‡↔		INTK I KP VB
	01	B01A B02A B03A
		B09A B20A B36A
		B36B B36C B60A
		B76A B76B B76C
		B87A
	03	D02A D37A D37B
		D87Z
	04	E02A E33A E36A
		E36B E36C E87A
		E87B E90A E90B
		E90C
	05	F36A F36B F36C
		F36D F36E F37A
		F37B F73A F86A
		F87Z F98A
	06	G03A G09A G12A
		G13A G16A G21B
		G22A G37Z G38A
		G38B G38C G67A
		G87A
	07	H01A H01B H01C
		H33Z H37A H87Z
	09	J33Z J87Z
	10	K37A K37B K87Z
	11	L37A L37B L87Z
	12	M38A
	13	N01B N02A N04A
		N33Z
	14	O38A
	16	Q37A
	17	R01A R50A R50B
		R50C R60B R61A

CHOP	MDC	DRG
	18B	T01A T01C T36A T36B T36C T60A T60B T60C T60F
	19	U60A U66A
	20	V01Z
	21A	W01A W01B W01C W01D W60A W60B W61A
	21B	X37A X86A
	22	Y02A Y02B
	23	Z02Z
	Prä	A04A A04B A06A A06B A06C A07A A07B A07C A11A A11B A11C A11D A15A A15B A46A A46B A46C A46D A93A A94A A94B A94C A95A A95B A95C A95D A97A A97B A97C A97D
99.B7.16‡↔		INTK I KP VB
	01	B01A B02A B03A B09A B20A B36A B36B B36C B60A B76A B76B B76C B87A
	03	D02A D37A D37B D87Z
	04	E02A E33A E36A E36B E36C E87A E87B E90A E90B E90C
	05	F36A F36B F36C F36D F36E F37A F37B F73A F86A F87Z F98A
	06	G03A G09A G12A G13A G16A G21B G22A G37Z G38A G38B G38C G67A G87A
	07	H01A H01B H01C H33Z H37A H87Z
	09	J33Z J87Z
	10	K37A K37B K87Z
	11	L37A L37B L87Z
	12	M38A
	13	N01B N02A N04A N33Z
	14	O38A
	16	Q37A
	17	R01A R50A R50B R50C R60B R61A
	18B	T01A T01C T36A T36B T60A T60B T60C T60F
	19	U60A U66A
	20	V01Z
	21A	W01A W01B W01C W60A W60B W61A
	21B	X37A X86A
	22	Y02A Y02B
	23	Z02Z
	Prä	A04A A04B A06A A06B A06C A07A A07B A07C A11A A11B A11C A11D A15A A15B A46A A46C A93A A94A A94B A94C A95A A95B A95C A95D A97A A97B A97C A97D
99.B7.17‡↔		INTK I INTK II KP VB
	01	B01A B02A B03A B09A B20A B36A B36B B36C B60A B76A B76B B76C B87A
	03	D02A D37A D37B D87Z
	04	E02A E33A E36A E36B E36C E87A E87B E90A E90B E90C
	05	F36A F36B F36C F36D F37A F37B F73A F86A F87Z F98A
	06	G03A G09A G12A G13A G16A G21B G22A G37Z G38A G38B G38C G67A G87A
	07	H01A H01B H01C H33Z H37A H87Z
	09	J33Z J87Z
	10	K37A K37B K87Z
	11	L37A L37B L87Z
	12	M38A
	13	N01B N02A N04A N33Z
	14	O38A
	16	Q37A
	17	R01A R50A R50B R50C R60B R61A
	18B	T01A T01C T36A T36B T60A T60B T60C T60F
	19	U60A U66A
	20	V01Z
	21A	W01A W01B W01C W60A W60B W61A
	21B	X37A X86A
	22	Y02A Y02B
	23	Z02Z
	Prä	A04A A04B A06A A06B A06C A07A A07B A07C A11A A11B A11C A11D A15A A15B A46A A46C A93A A94A A94B A94C A95A A95B A95C A95D A97A A97B A97C A97D
99.B7.18‡↔		INTK I INTK II KP VB
	01	B01A B02A B03A B09A B20A B36A B36B B36C B60A B76A B76B B76C B87A
	03	D02A D37A D37B D87Z
	04	E02A E33A E36A E36B E36C E87A E87B E90A E90B E90C
	05	F36A F36B F36C F36D F37A F37B F73A F86A F87Z F98A
	06	G03A G09A G12A G13A G16A G21B G22A G37Z G38A G38B G38C G67A G87A
	07	H01A H01B H01C H33Z H37A H87Z
	09	J33Z J87Z
	10	K37A K37B K87Z
	11	L37A L37B L87Z
	12	M38A
	13	N01B N02A N04A N33Z
	14	O38A
	16	Q37A
	17	R01A R50A R50B R50C R60B R61A
	18B	T01A T01C T36A T36B T60A T60B T60C T60F
	19	U60A U66A
	20	V01Z
	21A	W01A W01B W01C W60A W60B W61A
	21B	X37A X86A
	22	Y02A Y02B
	23	Z02Z
	Prä	A04A A04B A06A A06B A06C A07A A07B A07C A11A A11B A11C A11D A15A A15B A46A A46C A93A A94A A94B A94C A95A A95B A95C A95D A97A A97B A97C A97D
99.B7.1A‡↔		INTK I INTK II KP VB
	01	B01A B02A B03A B09A B20A B36A B36B B36C B60A B76A B76B B76C B87A
	03	D02A D37A D37B D87Z
	04	E02A E33A E36A E36B E36C E87A E87B E90A E90B E90C
	05	F36A F36B F36C F36D F37A F37B F73A F86A F87Z F98A
	06	G03A G09A G12A G13A G16A G21B G22A G37Z G38A G38B G38C G67A G87A
	07	H01A H01B H01C H33Z H37A H87Z
	09	J33Z J87Z
	10	K37A K37B K87Z
	11	L37A L37B L87Z
	12	M38A

PROC

PROC

CHOP	MDC	DRG
	13	N01B N02A N04A N33Z
	14	O38A
	16	Q37A
	17	R01A R50A R50B R50C R60B R61A
	18B	T01A T01C T36A T36B T60A T60B T60C T60F
	19	U60A U66A
	20	V01Z
	21A	W01A W01B W01C W60A W60B W61A
	21B	X37A X86A
	22	Y02A Y02B
	23	Z02Z
	Prä	A04A A04B A06A A06B A06C A07A A07B A07C A11A A11B A11C A11D A15A A15B A46A A46C A93A A94A A94B A94C A95A A95B A95C A95D A97A A97B A97C A97D
99.B7.1B‡↔		INTK I INTK II KP SVB VB
	01	B01A B02A B03A B09A B20A B36A B36B B36C B60A B76A B76B B76C B87A
	03	D02A D37A D37B D87Z
	04	E02A E33A E36A E36B E36C E87A E87B E90A E90B E90C
	05	F36A F36B F36C F36D F37A F37B F73A F86A F87Z F98A
	06	G03A G09A G12A G13A G16A G21B G22A G37Z G38A G38B G38C G67A G87A
	07	H01A H01B H01C H33Z H37A H87Z
	09	J33Z J87Z
	10	K37A K37B K87Z
	11	L37A L37B L87Z
	12	M38A
	13	N01B N02A N04A N33Z
	14	O38A
	16	Q37A
	17	R01A R50A R50B R50C R60B R61A
	18B	T01A T01C T36A T36B T60A T60B T60C T60F
	19	U60A U66A
	20	V01Z
	21A	W01A W01B W01C W60A W60B W61A
	21B	X37A X86A
	22	Y02A Y02B
	23	Z02Z
	Prä	A04A A04B A06A A06B A06C A07A A07B A07C A11A A11B A11C A11D A15A A15B A46A A46C A93A A94A A94B A94C A95A A95B A95C A95D A97A A97B A97C A97D
99.B7.1C‡↔		INTK I INTK II KP SVB VB
	01	B01A B02A B03A B09A B20A B36A B36B B36C B60A B76A B76B B76C B87A
	03	D02A D37A D37B D87Z
	04	E02A E33A E36A E36B E36C E87A E87B E90A E90B E90C
	05	F36A F36B F36C F36D F37A F37B F73A F86A F87Z F98A
	06	G03A G09A G12A G13A G16A G21B G22A G37Z G38A G38B G38C G67A G87A
	07	H01A H01B H01C H33Z H37A H87Z
	09	J33Z J87Z
	10	K37A K37B K87Z
	11	L37A L37B L87Z
	12	M38A
	13	N01B N02A N04A N33Z
	14	O38A
	16	Q37A
	17	R01A R50A R50B R50C R60B R61A
	18B	T01A T01C T36A T36B T60A T60B T60C T60F
	19	U60A U66A
	20	V01Z
	21A	W01A W01B W01C W60A W60B W61A
	21B	X37A X86A
	22	Y02A Y02B
	23	Z02Z
	Prä	A04A A04B A06A A06B A06C A07A A07B A07C A11A A11B A11C A11D A15A A15B A46A A46C A93A A94A A94B A94C A95A A95B A95C A95D A97A A97B A97C A97D
99.B7.1D‡↔		INTK I INTK II KP SVB VB
	01	B01A B02A B03A B09A B20A B36A B36B B36C B60A B76A B76B B76C B87A
	03	D02A D37A D37B D87Z
	04	E02A E33A E36A E36B E36C E87A E87B E90A E90B E90C
	05	F36A F36B F36C F36D F37A F37B F73A F86A F87Z F98A
	06	G03A G09A G12A G13A G16A G21B G22A G37Z G38A G38B G38C G67A G87A
	07	H01A H01B H01C H33Z H37A H87Z
	09	J33Z J87Z
	10	K37A K37B K87Z
	11	L37A L37B L87Z
	12	M38A
	13	N01B N02A N04A N33Z
	14	O38A
	16	Q37A
	17	R01A R50A R50B R50C R60B R61A
	18B	T01A T01C T36A T36B T60A T60B T60C T60F
	19	U60A U66A
	20	V01Z
	21A	W01A W01B W01C W60A W60B W61A
	21B	X37A X86A
	22	Y02A Y02B
	23	Z02Z
	Prä	A04A A04B A06A A06B A06C A07A A07B A07C A11A A11B A11C A11D A15A A15B A46A A46C A93A A94A A94B A94C A95A A95B A95C A95D A97A A97B A97C A97D
99.B7.1E‡↔		INTK I INTK II KP SVB VB
	01	B01A B02A B03A B09A B20A B36A B36B B36C B60A B76A B76B B76C B87A
	03	D02A D37A D37B D87Z
	04	E02A E33A E36A E36B E36C E87A E87B E90A E90B E90C
	05	F36A F36B F36C F36D F37A F37B F73A F86A F87Z F98A
	06	G03A G09A G12A G13A G16A G21B G22A G37Z G38A G38B G38C G67A G87A

CHOP	MDC	DRG
	07	H01A H01B H01C
		H33Z H37A H87Z
	09	J33Z J87Z
	10	K37A K37B K87Z
	11	L37A L37B L87Z
	12	M38A
	13	N01B N02A N04A
		N33Z
	14	O38A
	16	Q37A
	17	R01A R50A R50B
		R50C R60B R61A
	18B	T01A T01C T36A
		T36B T60A T60B
		T60C T60F
	19	U60A U66A
	20	V01Z
	21A	W01A W01B W01C
		W60A W60B W61A
	21B	X37A X86A
	22	Y02A Y02B
	23	Z02Z
	Prä	A04A A04B A06A
		A06B A06C A07A
		A07B A07C A11A
		A11B A11C A11D
		A15A A15B A46A
		A46C A93A A94A
		A94B A94C A95A
		A95B A95C A95D
		A97A A97B A97C
		A97D
99.B7.1F‡↔		INTK I INTK II KP
		SVB VB
	01	B01A B02A B03A
		B09A B20A B36A
		B36B B36C B60A
		B76A B76B B76C
		B87A
	03	D02A D37A D37B
		D87Z
	04	E02A E33A E36A
		E36B E36C E87A
		E87B E90A E90B
		E90C
	05	F36A F36B F36C
		F36D F37A F37B
		F73A F86A F87Z
		F98A
	06	G03A G09A G12A
		G13A G16A G21B
		G22A G37Z G38A
		G38B G38C G67A
		G87A
	07	H01A H01B H01C
		H33Z H37A H87Z
	09	J33Z J87Z
	10	K37A K37B K87Z
	11	L37A L37B L87Z
	12	M38A
	13	N01B N02A N04A
		N33Z
	14	O38A
	16	Q37A
	17	R01A R50A R50B
		R50C R60B R61A
	18B	T01A T01C T36A
		T36B T60A T60B
		T60C T60F
	19	U60A U66A

CHOP	MDC	DRG
	20	V01Z
	21A	W01A W01B W01C
		W60A W60B W61A
	21B	X37A X86A
	22	Y02A Y02B
	23	Z02Z
	Prä	A04A A04B A06A
		A06B A06C A07A
		A07B A07C A11A
		A11B A11C A11D
		A15A A15B A46A
		A46C A93A A94A
		A94B A94C A95A
		A95B A95C A95D
		A97A A97B A97C
		A97D
99.B7.1G‡↔		INTK I INTK II KP
		SVB VB
	01	B01A B02A B03A
		B09A B20A B36A
		B36B B36C B60A
		B76A B76B B76C
		B87A
	03	D02A D37A D37B
		D87Z
	04	E02A E33A E36A
		E36B E36C E87A
		E87B E90A E90B
		E90C
	05	F36A F36B F36C
		F36D F37A F37B
		F73A F86A F87Z
		F98A
	06	G03A G09A G12A
		G13A G16A G21B
		G22A G37Z G38A
		G38B G38C G67A
		G87A
	07	H01A H01B H01C
		H33Z H37A H87Z
	09	J33Z J87Z
	10	K37A K37B K87Z
	11	L37A L37B L87Z
	12	M38A
	13	N01B N02A N04A
		N33Z
	14	O38A
	16	Q37A
	17	R01A R50A R50B
		R50C R60B R61A
	18B	T01A T01C T36A
		T36B T60A T60B
		T60C T60F
	19	U60A U66A
	20	V01Z
	21A	W01A W01B W01C
		W60A W60B W61A
	21B	X37A X86A
	22	Y02A Y02B
	23	Z02Z
	Prä	A04A A04B A06A
		A06B A06C A07A
		A07B A07C A11A
		A11B A11C A11D
		A15A A15B A46A
		A46C A93A A94A
		A94B A94C A95A
		A95B A95C A95D
		A97A A97B A97C
		A97D

CHOP	MDC	DRG
99.B7.1H‡↔		INTK I INTK II KP
		SVB VB
	01	B01A B02A B03A
		B09A B20A B36A
		B36B B36C B60A
		B76A B76B B76C
		B87A
	03	D02A D37A D37B
		D87Z
	04	E02A E33A E36A
		E36B E36C E87A
		E87B E90A E90B
		E90C
	05	F36A F36B F36C
		F36D F37A F37B
		F73A F86A F87Z
		F98A
	06	G03A G09A G12A
		G13A G16A G21B
		G22A G37Z G38A
		G38B G38C G67A
		G87A
	07	H01A H01B H01C
		H33Z H37A H87Z
	09	J33Z J87Z
	10	K37A K37B K87Z
	11	L37A L37B L87Z
	12	M38A
	13	N01B N02A N04A
		N33Z
	14	O38A
	16	Q37A
	17	R01A R50A R50B
		R50C R60B R61A
	18B	T01A T01C T36A
		T36B T60A T60B
		T60C T60F
	19	U60A U66A
	20	V01Z
	21A	W01A W01B W01C
		W60A W60B W61A
	21B	X37A X86A
	22	Y02A Y02B
	23	Z02Z
	Prä	A04A A04B A06A
		A06B A06C A07A
		A07B A07C A11A
		A11B A11C A11D
		A15A A15B A46A
		A46C A93A A94A
		A94B A94C A95A
		A95B A95C A95D
		A97A A97B A97C
		A97D
99.B7.1I‡↔		INTK I INTK II KP
		SVB VB
	01	B01A B02A B03A
		B09A B20A B36A
		B36B B36C B60A
		B76A B76B B76C
		B87A
	03	D02A D37A D37B
		D87Z
	04	E02A E33A E36A
		E36B E36C E87A
		E87B E90A E90B
		E90C
	05	F36A F36B F36C
		F36D F37A F37B
		F73A F86A F87Z

PROC

PROC

CHOP	MDC	DRG
		F98A
	06	G03A G09A G12A
		G13A G16A G21B
		G22A G37Z G38A
		G38B G38C G67A
		G87A
	07	H01A H01B H01C
		H33Z H37A H87Z
	09	J33Z J87Z
	10	K37A K37B K87Z
	11	L37A L37B L87Z
	12	M38A
	13	N01B N02A N04A
		N33Z
	14	O38A
	16	Q37A
	17	R01A R50A R50B
		R50C R60B R61A
	18B	T01A T01C T36A
		T36B T60A T60B
		T60C T60F
	19	U60A U66A
	20	V01Z
	21A	W01A W01B W01C
		W60A W60B W61A
	21B	X37A X86A
	22	Y02A Y02B
	23	Z02Z
	Prä	A04A A04B A06A
		A06B A06C A07A
		A07B A07C A11A
		A11B A11C A11D
		A15A A15B A46A
		A46C A93A A94A
		A94B A94C A95A
		A95B A95C A95D
		A97A A97B A97C
		A97D
99.B7.1J‡↔		INTK I INTK II KP
		SVB VB
	01	B01A B02A B03A
		B09A B20A B36A
		B36B B36C B60A
		B76A B76B B76C
		B87A
	03	D02A D37A D37B
		D87Z
	04	E02A E33A E36A
		E36B E36C E87A
		E87B E90A E90B
		E90C
	05	F36A F36B F36C
		F36D F37A F37B
		F73A F86A F87Z
		F98A
	06	G03A G09A G12A
		G13A G16A G21B
		G22A G37Z G38A
		G38B G38C G67A
		G87A
	07	H01A H01B H01C
		H33Z H37A H87Z
	09	J33Z J87Z
	10	K37A K37B K87Z
	11	L37A L37B L87Z
	12	M38A
	13	N01B N02A N04A
		N33Z
	14	O38A
	16	Q37A

CHOP	MDC	DRG
	17	R01A R50A R50B
		R50C R60B R61A
	18B	T01A T01C T36A
		T36B T60A T60B
		T60C T60F
	19	U60A U66A
	20	V01Z
	21A	W01A W01B W01C
		W60A W60B W61A
	21B	X37A X86A
	22	Y02A Y02B
	23	Z02Z
	Prä	A04A A04B A06A
		A06B A06C A07A
		A07B A07C A11A
		A11B A11C A11D
		A15A A15B A46A
		A46C A93A A94A
		A94B A94C A95A
		A95B A95C A95D
		A97A A97B A97C
		A97D
99.B7.1K‡↔		INTK I INTK II KP
		SVB VB
	01	B01A B02A B03A
		B09A B20A B36A
		B36B B36C B60A
		B76A B76B B76C
		B87A
	03	D02A D37A D37B
		D87Z
	04	E02A E33A E36A
		E36B E36C E87A
		E87B E90A E90B
		E90C
	05	F36A F36B F36C
		F36D F37A F37B
		F73A F86A F87Z
		F98A
	06	G03A G09A G12A
		G13A G16A G21B
		G22A G37Z G38A
		G38B G38C G67A
		G87A
	07	H01A H01B H01C
		H33Z H37A H87Z
	09	J33Z J87Z
	10	K37A K37B K87Z
	11	L37A L37B L87Z
	12	M38A
	13	N01B N02A N04A
		N33Z
	14	O38A
	16	Q37A
	17	R01A R50A R50B
		R50C R60B R61A
	18B	T01A T01C T36A
		T36B T60A T60B
		T60C T60F
	19	U60A U66A
	20	V01Z
	21A	W01A W01B W01C
		W60A W60B W61A
	21B	X37A X86A
	22	Y02A Y02B
	23	Z02Z
	Prä	A04A A04B A06A
		A06B A06C A07A
		A07B A07C A11A
		A11B A11C A11D

CHOP	MDC	DRG
		A15A A15B A46A
		A46C A93A A94A
		A94B A94C A95A
		A95B A95C A95D
		A97A A97B A97C
		A97D
99.B7.1L‡↔		INTK I INTK II KP
		SVB VB
	01	B01A B02A B03A
		B09A B20A B36A
		B36B B36C B60A
		B76A B76B B76C
		B87A
	03	D02A D37A D37B
		D87Z
	04	E02A E33A E36A
		E36B E36C E87A
		E87B E90A E90B
		E90C
	05	F36A F36B F36C
		F36D F37A F37B
		F73A F86A F87Z
		F98A
	06	G03A G09A G12A
		G13A G16A G21B
		G22A G37Z G38A
		G38B G38C G67A
		G87A
	07	H01A H01B H01C
		H33Z H37A H87Z
	09	J33Z J87Z
	10	K37A K37B K87Z
	11	L37A L37B L87Z
	12	M38A
	13	N01B N02A N04A
		N33Z
	14	O38A
	16	Q37A
	17	R01A R50A R50B
		R50C R60B R61A
	18B	T01A T01C T36A
		T36B T60A T60B
		T60C T60F
	19	U60A U66A
	20	V01Z
	21A	W01A W01B W01C
		W60A W60B W61A
	21B	X37A X86A
	22	Y02A Y02B
	23	Z02Z
	Prä	A04A A04B A06A
		A06B A06C A07A
		A07B A07C A11A
		A11B A11C A11D
		A15A A15B A46A
		A46C A93A A94A
		A94B A94C A95A
		A95B A95C A95D
		A97A A97B A97C
		A97D
99.B7.1M‡↔		INTK I INTK II KP
		SVB VB
	01	B01A B02A B03A
		B09A B20A B36A
		B36B B36C B60A
		B76A B76B B76C
		B87A
	03	D02A D37A D37B
		D87Z
	04	E02A E33A E36A

CHOP	MDC	DRG
		E36B E36C E87A
		E87B E90A E90B
		E90C
	05	F36A F36B F36C
		F36D F37A F37B
		F73A F86A F87Z
		F98A
	06	G03A G09A G12A
		G13A G16A G21B
		G22A G37Z G38A
		G38B G38C G67A
		G87A
	07	H01A H01B H01C
		H33Z H37A H87Z
	09	J33Z J87Z
	10	K37A K37B K87Z
	11	L37A L37B L87Z
	12	M38A
	13	N01B N02A N04A
		N33Z
	14	O38A
	16	Q37A
	17	R01A R50A R50B
		R50C R60B R61A
	18B	T01A T01C T36A
		T36B T60A T60B
		T60C T60F
	19	U60A U66A
	20	V01Z
	21A	W01A W01B W01C
		W60A W60B W61A
	21B	X37A X86A
	22	Y02A Y02B
	23	Z02Z
	Prä	A04A A04B A06A
		A06B A06C A07A
		A07B A07C A11A
		A11B A11C A11D
		A15A A15B A46A
		A46C A93A A94A
		A94B A94C A95A
		A95B A95C A95D
		A97A A97B A97C
		A97D
99.B7.1N‡↔		INTK I INTK II KP
		SVB VB
	01	B01A B02A B03A
		B09A B20A B36A
		B36B B36C B60A
		B76A B76B B76C
		B87A
	03	D02A D37A D37B
		D87Z
	04	E02A E33A E36A
		E36B E36C E87A
		E87B E90A E90B
		E90C
	05	F36A F36B F36C
		F36D F37A F37B
		F73A F86A F87Z
		F98A
	06	G03A G09A G12A
		G13A G16A G21B
		G22A G37Z G38A
		G38B G38C G67A
		G87A
	07	H01A H01B H01C
		H33Z H37A H87Z
	09	J33Z J87Z
	10	K37A K37B K87Z

CHOP	MDC	DRG
	11	L37A L37B L87Z
	12	M38A
	13	N01B N02A N04A
		N33Z
	14	O38A
	16	Q37A
	17	R01A R50A R50B
		R50C R60B R61A
	18B	T01A T01C T36A
		T36B T60A T60B
		T60C T60F
	19	U60A U66A
	20	V01Z
	21A	W01A W01B W01C
		W60A W60B W61A
	21B	X37A X86A
	22	Y02A Y02B
	23	Z02Z
	Prä	A04A A04B A06A
		A06B A06C A07A
		A07B A07C A11A
		A11B A11C A11D
		A15A A15B A46A
		A46C A93A A94A
		A94B A94C A95A
		A95B A95C A95D
		A97A A97B A97C
		A97D
99.B7.1O‡↔		INTK I INTK II KP
		SVB VB
	01	B01A B02A B03A
		B09A B20A B36A
		B36B B36C B60A
		B76A B76B B76C
		B87A
	03	D02A D37A D37B
		D87Z
	04	E02A E33A E36A
		E36B E36C E87A
		E87B E90A E90B
		E90C
	05	F36A F36B F36C
		F36D F37A F37B
		F73A F86A F87Z
		F98A
	06	G03A G09A G12A
		G13A G16A G21B
		G22A G37Z G38A
		G38B G38C G67A
		G87A
	07	H01A H01B H01C
		H33Z H37A H87Z
	09	J33Z J87Z
	10	K37A K37B K87Z
	11	L37A L37B L87Z
	12	M38A
	13	N01B N02A N04A
		N33Z
	14	O38A
	16	Q37A
	17	R01A R50A R50B
		R50C R60B R61A
	18B	T01A T01C T36A
		T36B T60A T60B
		T60C T60F
	19	U60A U66A
	20	V01Z
	21A	W01A W01B W01C
		W60A W60B W61A
	21B	X37A X86A

CHOP	MDC	DRG
	22	Y02A Y02B
	23	Z02Z
	Prä	A04A A04B A06A
		A06B A06C A07A
		A07B A07C A11A
		A11B A11C A11D
		A15A A15B A46A
		A46C A93A A94A
		A94B A94C A95A
		A95B A95C A95D
		A97A A97B A97C
		A97D
99.B7.42‡↔	01	B09A B60A B70H
		B80A B81A B81B
		B86A
	03	D87Z
	04	E87A E87B
	05	F73A
	06	G22A G86B
	10	K06A
	14	O02A
	15	P60B P65B P66B
		P67A P67B
	20	V02A
	21B	X62A X86B
	23	Z86A
99.B7.43‡↔	Prä	A94A A94B A97A
		A97B B61A
	01	B01A B02A B09A
		B20A B20B B20C
		B60A B76A B76B
		B76C B87A
	03	D87Z
	04	E36A E36B E36C
		E36D E87A E87B
		E90A E90B E90C
	05	F36A F36B F36C
		F36D F36E F37A
		F37B F73A F86A
	06	G09A G12A G13A
		G22A G38A G38B
		G38C G67A G87A
	07	H07A H07B H37A
		H37B H87Z
	08	I02A I02B I02C
		I08A I09A I29A
	09	J33Z J87Z
	10	K37A K37B K87Z
	11	L37A L37B L87Z
	12	M38A M38B
	13	N01B N02A N04A
		N33Z
	14	O38A O38B
	15	P60B P65B P66B
		P67A
	16	Q37A
	17	R01A
	18B	T60A T60B T60C
		T60F
	20	V02A
	21A	W01A W01B W01C
		W01D W60A W60B
	21B	X37A X86A
	22	Y02A Y02B
	23	Z86A
99.B7.44‡↔	Prä	A11A A11B A11C
		A11D A46A A46B
		A46C A46D A90A
		A90B A90C A94A
		A94B A94C A97A

PROC

PROC

CHOP	MDC	DRG
		A97B A97C A97D
		B61A B61B B61C
	01	B01A B02A B09A
		B20A B36A B36B
		B36C B60A B76A
		B76B B76C B87A
		B90A B90B
	03	D02A D37A D37B
		D87Z
	04	E36A E36B E36C
		E36D E87A E87B
		E90A E90B E90C
	05	F36A F36B F36C
		F36D F36E F37A
		F37B F73A F86A
		F90A F90B F90C
		F98A
	06	G03A G09A G12A
		G13A G22A G37Z
		G38A G38B G38C
		G67A G87A
	07	H01A H01B H01C
		H07A H07B H33Z
		H37A H87Z
	08	I02A I02B I02C
		I06A I06B I08A
		I09A I10A I13A
		I29A I31A I43A
		I46A I87A I95A
		I95B
	09	J33Z J87Z
	10	K37A K37B K87Z
	11	L37A L37B L87Z
	12	M38A
	13	N01B N02A N04A
		N33Z
	14	O38A
	15	P05A P05B P05C
		P05D P60B P65A
		P66A P67A
	16	Q37A
	17	R01A R50A R50B
		R50C R60B
	18B	T01A T36A T36B
		T36C T60A T60B
		T60C T60F
	19	U61A U66A
	20	V01Z
	21A	W01A W01B W01C
		W01D W60A W60B
		W61A
	21B	X37A X86A
	22	Y02A Y02B
	23	Z02Z
99.B7.45‡↔		INTK I VB
	01	B01A B02A B09A
		B20A B36A B36B
		B36C B60A B76A
		B76B B76C B87A
	03	D02A D37A D37B
		D87Z
	04	E36A E36B E36C
		E36D E87A E87B
	05	F36A F36B F36C
		F36D F36E F37A
		F37B F73A F86A
		F98A
	06	G03A G09A G12A
		G13A G22A G37Z
		G38A G38B G38C

CHOP	MDC	DRG
		G67A G87A
	07	H01A H01B H01C
		H07A H07B H33Z
		H37A H87Z
	09	J87Z
	10	K37A K37B K87Z
	11	L37A L37B L87Z
	12	M38A
	13	N01B N02A N04A
		N33Z
	14	O38A
	15	P02A P03A P03B
		P04A P04B P04C
		P05A P05B P05C
		P05D P60B P66A
		P67A
	16	Q37A
	17	R01A R50A R50B
		R50C R60B
	18B	T01A T36A T36B
		T36C T60A T60B
		T60C T60F
	19	U66A
	20	V01Z
	21A	W01A W01B W01C
		W01D W60A W60B
		W61A
	21B	X37A X86A
	22	Y02A Y02B
	23	Z02Z
	Prä	A11A A11B A11C
		A11D A46A A46B
		A46C A46D A94A
		A94B A94C A97A
		A97B A97C A97D
		B61B B61C
99.B7.46‡↔		INTK I VB
	01	B01A B02A B09A
		B20A B36A B36B
		B36C B60A B76A
		B76B B76C B87A
	03	D02A D37A D37B
		D87Z
	04	E36A E36B E36C
		E36D E87A E87B
	05	F36A F36B F36C
		F36D F37A F37B
		F73A F86A F98A
	06	G03A G09A G12A
		G13A G22A G37Z
		G38A G38B G38C
		G67A G87A
	07	H01A H01B H01C
		H07A H07B H33Z
		H37A H87Z
	09	J87Z
	10	K37A K37B K87Z
	11	L37A L37B L87Z
	12	M38A
	13	N01B N02A N04A
		N33Z
	14	O38A
	15	P02A P03A P03B
		P04A P04B P05A
		P05B P05C P05D
		P60B P66A P67A
	16	Q37A
	17	R01A R50A R50B
		R50C R60B
	18B	T01A T36A T36B

CHOP	MDC	DRG
		T36C T60A T60B
		T60C T60F
	19	U66A
	20	V01Z
	21A	W01A W01B W01C
		W60A W60B W61A
	21B	X37A X86A
	22	Y02A Y02B
	23	Z02Z
	Prä	A11A A11B A11C
		A11D A46A A46C
		A94A A94B A94C
		A97A A97B A97C
		A97D B61B B61C
99.B7.47‡↔		INTK I VB
	01	B01A B02A B09A
		B20A B36A B36B
		B36C B60A B76A
		B76B B76C B87A
	03	D02A D37A D37B
		D87Z
	04	E36A E36B E36C
		E36D E87A E87B
	05	F36A F36B F36C
		F36D F37A F37B
		F73A F86A F98A
	06	G03A G09A G12A
		G13A G22A G37Z
		G38A G38B G38C
		G67A G87A
	07	H01A H01B H01C
		H07A H07B H33Z
		H37A H87Z
	09	J87Z
	10	K37A K37B K87Z
	11	L37A L37B L87Z
	12	M38A
	13	N01B N02A N04A
		N33Z
	14	O38A
	15	P02A P02B P03A
		P03B P04A P04B
		P05A P05B P05C
		P05D P60B P66A
		P67A
	16	Q37A
	17	R01A R50A R50B
		R50C R60B
	18B	T01A T36A T36B
		T60A T60B T60C
		T60F
	19	U66A
	20	V01Z
	21A	W01A W01B W01C
		W60A W60B W61A
	21B	X37A X86A
	22	Y02A Y02B
	23	Z02Z
	Prä	A06A A06B A06C
		A07A A07B A07C
		A11A A11B A11C
		A11D A46A A46C
		A94A A94B A94C
		A97A A97B A97C
		A97D B61B B61C
99.B7.48‡↔		INTK I INTK II VB
	01	B01A B02A B09A
		B20A B36A B36B
		B36C B60A B76A
		B76B B76C B87A

CHOP	MDC	DRG
	03	D02A D37A D37B D87Z
	04	E36A E36B E36C E36D E87A E87B
	05	F36A F36B F36C F36D F37A F37B F73A F86A F98A
	06	G03A G09A G12A G13A G22A G37Z G38A G38B G38C G67A G87A
	07	H01A H01B H01C H07A H07B H33Z H37A H87Z
	09	J87Z
	10	K37A K37B K87Z
	11	L37A L37B L87Z
	12	M38A
	13	N01B N02A N04A N33Z
	14	O38A
	15	P02A P02B P03A P03B P04A P04B P05A P05B P05C P05D P60B P66A P67A
	16	Q37A
	17	R01A R50A R50B R50C R60B
	18B	T01A T36A T36B T60A T60B T60C T60F
	19	U66A
	20	V01Z
	21A	W01A W01B W01C W60A W60B W61A
	21B	X37A X86A
	22	Y02A Y02B
	23	Z02Z
	Prä	A06A A06B A06C A07A A07B A07C A11A A11B A11C A11D A46A A46C A94A A94B A94C A97A A97B A97C A97D B61B B61C
99.B7.4A‡↔		INTK I INTK II VB
	01	B01A B02A B09A B20A B36A B36B B36C B60A B76A B76B B76C B87A
	03	D02A D37A D37B D87Z
	04	E36A E36B E36C E36D E87A E87B
	05	F36A F36B F36C F36D F37A F37B F73A F86A F98A
	06	G03A G09A G12A G13A G22A G37Z G38A G38B G38C G67A G87A
	07	H01A H01B H01C H07A H07B H33Z H37A H87Z
	09	J87Z
	10	K37A K37B K87Z
	11	L37A L37B L87Z
	12	M38A
	13	N01B N02A N04A N33Z
	14	O38A
	15	P02A P02B P03A P03B P04A P04B P05A P05B P05C P05D P60B P66A P67A
	16	Q37A
	17	R01A R50A R50B R50C R60B
	18B	T01A T36A T36B T60A T60B T60C T60F
	19	U66A
	20	V01Z
	21A	W01A W01B W01C W60A W60B W61A
	21B	X37A X86A
	22	Y02A Y02B
	23	Z02Z
	Prä	A06A A06B A06C A07A A07B A07C A11A A11B A11C A11D A46A A46C A94A A94B A94C A97A A97B A97C A97D B61B B61C
99.B7.4B‡↔		INTK I INTK II VB
	01	B01A B02A B09A B20A B36A B36B B36C B60A B76A B76B B76C B87A
	03	D02A D37A D37B D87Z
	04	E36A E36B E36C E36D E87A E87B
	05	F36A F36B F36C F36D F37A F37B F73A F86A F98A
	06	G03A G09A G12A G13A G22A G37Z G38A G38B G38C G67A G87A
	07	H01A H01B H01C H07A H07B H33Z H37A H87Z
	09	J87Z
	10	K37A K37B K87Z
	11	L37A L37B L87Z
	12	M38A
	13	N01B N02A N04A N33Z
	14	O38A
	15	P02A P03A P03B P04A P04B P05A P05B P05C P05D P60B P66A P67A
	16	Q37A
	17	R01A R50A R50B R50C R60B
	18B	T01A T36A T36B T60A T60B T60C T60F
	19	U66A
	20	V01Z
	21A	W01A W01B W01C W60A W60B W61A
	21B	X37A X86A
	22	Y02A Y02B
	23	Z02Z
	Prä	A06A A06B A06C A07A A07B A07C A11A A11B A11C A11D A46A A46C A94A A94B A94C A97A A97B A97C A97D B61B B61C
99.B7.4C‡↔		INTK I INTK II VB
	01	B01A B02A B09A B20A B36A B36B B36C B60A B76A B76B B76C B87A
	03	D02A D37A D37B D87Z
	04	E36A E36B E36C E36D E87A E87B
	05	F36A F36B F36C F36D F37A F37B F73A F86A F98A
	06	G03A G09A G12A G13A G22A G37Z G38A G38B G38C G67A G87A
	07	H01A H01B H01C H07A H07B H33Z H37A H87Z
	09	J87Z
	10	K37A K37B K87Z
	11	L37A L37B L87Z
	12	M38A
	13	N01B N02A N04A N33Z
	14	O38A
	15	P02A P03A P04A P04B P05A P05B P05C P05D P60B P66A P67A
	16	Q37A
	17	R01A R50A R50B R50C R60B
	18B	T01A T36A T36B T60A T60B T60C T60F
	19	U66A
	20	V01Z
	21A	W01A W01B W01C W60A W60B W61A
	21B	X37A X86A
	22	Y02A Y02B
	23	Z02Z
	Prä	A06A A06B A06C A07A A07B A07C A11A A11B A11C A11D A46A A46C A94A A94B A94C A97A A97B A97C A97D B61B B61C
99.B7.4D‡↔		INTK I INTK II SVB VB
	01	B01A B02A B09A B20A B36A B36B B36C B60A B76A B76B B76C B87A
	03	D02A D37A D37B D87Z
	04	E36A E36B E36C E36D E87A E87B
	05	F36A F36B F36C F36D F37A F37B F73A F86A F98A

PROC

PROC

CHOP	MDC	DRG
	06	G03A G09A G12A G13A G22A G37Z G38A G38B G38C G67A G87A
	07	H01A H01B H01C H07A H07B H33Z H37A H87Z
	09	J87Z
	10	K37A K37B K87Z
	11	L37A L37B L87Z
	12	M38A
	13	N01B N02A N04A N33Z
	14	O38A
	15	P02A P03A P04A P04B P05A P05B P05C P05D P60B P66A P67A
	16	Q37A
	17	R01A R50A R50B R50C R60B
	18B	T01A T36A T36B T60A T60B T60C T60F
	19	U66A
	20	V01Z
	21A	W01A W01B W01C W60A W60B W61A
	21B	X37A X86A
	22	Y02A Y02B
	23	Z02Z
	Prä	A06A A06B A06C A07A A07B A07C A11A A11B A11C A11D A46A A46C A94A A94B A94C A97A A97B A97C A97D B61B B61C
99.B7.4E‡↔		INTK I INTK II SVB VB
	01	B01A B02A B09A B20A B36A B36B B36C B60A B76A B76B B76C B87A
	03	D02A D37A D37B D87Z
	04	E36A E36B E36C E36D E87A E87B
	05	F36A F36B F36C F36D F37A F37B F73A F86A F98A
	06	G03A G09A G12A G13A G22A G37Z G38A G38B G38C G67A G87A
	07	H01A H01B H01C H07A H07B H33Z H37A H87Z
	09	J87Z
	10	K37A K37B K87Z
	11	L37A L37B L87Z
	12	M38A
	13	N01B N02A N04A N33Z
	14	O38A
	15	P02A P03A P04A P04B P05A P05B P05C P05D P60B P66A P67A
	16	Q37A
	17	R01A R50A R50B R50C R60B
	18B	T01A T36A T36B T60A T60B T60C T60F
	19	U66A
	20	V01Z
	21A	W01A W01B W01C W60A W60B W61A
	21B	X37A X86A
	22	Y02A Y02B
	23	Z02Z
	Prä	A06A A06B A06C A07A A07B A07C A11A A11B A11C A11D A46A A46C A94A A94B A94C A97A A97B A97C A97D B61B B61C
99.B7.4F‡↔		INTK I INTK II SVB VB
	01	B01A B02A B09A B20A B36A B36B B36C B60A B76A B76B B76C B87A
	03	D02A D37A D37B D87Z
	04	E36A E36B E36C E36D E87A E87B
	05	F36A F36B F36C F36D F37A F37B F73A F86A F98A
	06	G03A G09A G12A G13A G22A G37Z G38A G38B G38C G67A G87A
	07	H01A H01B H01C H07A H07B H33Z H37A H87Z
	09	J87Z
	10	K37A K37B K87Z
	11	L37A L37B L87Z
	12	M38A
	13	N01B N02A N04A N33Z
	14	O38A
	15	P02A P03A P04A P04B P05A P05B P05C P05D P60B P66A P67A
	16	Q37A
	17	R01A R50A R50B R50C R60B
	18B	T01A T36A T36B T60A T60B T60C T60F
	19	U66A
	20	V01Z
	21A	W01A W01B W01C W60A W60B W61A
	21B	X37A X86A
	22	Y02A Y02B
	23	Z02Z
	Prä	A06A A06B A06C A07A A07B A07C A11A A11B A11C A11D A46A A46C A94A A94B A94C A97A A97B A97C A97D B61B B61C
99.B7.4G‡↔		INTK I INTK II SVB VB
	01	B01A B02A B09A B20A B36A B36B B36C B60A B76A B76B B76C B87A
	03	D02A D37A D37B D87Z
	04	E36A E36B E36C E36D E87A E87B
	05	F36A F36B F36C F36D F37A F37B F73A F86A F98A
	06	G03A G09A G12A G13A G22A G37Z G38A G38B G38C G67A G87A
	07	H01A H01B H01C H07A H07B H33Z H37A H87Z
	09	J87Z
	10	K37A K37B K87Z
	11	L37A L37B L87Z
	12	M38A
	13	N01B N02A N04A N33Z
	14	O38A
	15	P02A P03A P04A P04B P05A P05B P05C P05D P60B P61A P61B P61C P66A P67A
	16	Q37A
	17	R01A R50A R50B R50C R60B
	18B	T01A T36A T36B T60A T60B T60C T60F
	19	U66A
	20	V01Z
	21A	W01A W01B W01C W60A W60B W61A
	21B	X37A X86A
	22	Y02A Y02B
	23	Z02Z
	Prä	A06A A06B A06C A07A A07B A07C A11A A11B A11C A11D A46A A46C A94A A94B A94C A97A A97B A97C A97D B61B B61C
99.B7.4H‡↔		INTK I INTK II SVB VB
	01	B01A B02A B09A B20A B36A B36B B36C B60A B76A B76B B76C B87A
	03	D02A D37A D37B D87Z
	04	E36A E36B E36C E36D E87A E87B
	05	F36A F36B F36C F36D F37A F37B F73A F86A F98A
	06	G03A G09A G12A G13A G22A G37Z G38A G38B G38C G67A G87A
	07	H01A H01B H01C

CHOP	MDC	DRG
		H07A H07B H33Z H37A H87Z
	09	J87Z
	10	K37A K37B K87Z
	11	L37A L37B L87Z
	12	M38A
	13	N01B N02A N04A N33Z
	14	O38A
	15	P02A P03A P04A P04B P05A P05B P05C P05D P60B P61A P61C P66A P67A
	16	Q37A
	17	R01A R50A R50B R50C R60B
	18B	T01A T36A T36B T60A T60B T60C T60F
	19	U66A
	20	V01Z
	21A	W01A W01B W01C W60A W60B W61A
	21B	X37A X86A
	22	Y02A Y02B
	23	Z02Z
	Prä	A06A A06B A06C A07A A07B A07C A11A A11B A11C A11D A46A A46C A94A A94B A94C A97A A97B A97C A97D B61B B61C
99.B7.4I‡↔		INTK I INTK II SVB VB
	01	B01A B02A B09A B20A B36A B36B B36C B60A B76A B76B B76C B87A
	03	D02A D37A D37B D87Z
	04	E36A E36B E36C E36D E87A E87B
	05	F36A F36B F36C F36D F37A F37B F73A F86A F98A
	06	G03A G09A G12A G13A G22A G37Z G38A G38B G38C G67A G87A
	07	H01A H01B H01C H07A H07B H33Z H37A H87Z
	09	J87Z
	10	K37A K37B K87Z
	11	L37A L37B L87Z
	12	M38A
	13	N01B N02A N04A N33Z
	14	O38A
	15	P02A P03A P04A P04B P05A P05B P05C P05D P60B P61A P61C P66A P67A
	16	Q37A
	17	R01A R50A R50B R50C R60B
	18B	T01A T36A T36B

CHOP	MDC	DRG
		T60A T60B T60C T60F
	19	U66A
	20	V01Z
	21A	W01A W01B W01C W60A W60B W61A
	21B	X37A X86A
	22	Y02A Y02B
	23	Z02Z
	Prä	A06A A06B A06C A07A A07B A07C A11A A11B A11C A11D A46A A46C A94A A94B A94C A97A A97B A97C A97D B61B B61C
99.B7.4J‡↔		INTK I INTK II SVB VB
	01	B01A B02A B09A B20A B36A B36B B36C B60A B76A B76B B76C B87A
	03	D02A D37A D37B D87Z
	04	E36A E36B E36C E36D E87A E87B
	05	F36A F36B F36C F36D F37A F37B F73A F86A F98A
	06	G03A G09A G12A G13A G22A G37Z G38A G38B G38C G67A G87A
	07	H01A H01B H01C H07A H07B H33Z H37A H87Z
	09	J87Z
	10	K37A K37B K87Z
	11	L37A L37B L87Z
	12	M38A
	13	N01B N02A N04A N33Z
	14	O38A
	15	P02A P03A P04A P04B P05A P05B P05C P05D P37Z P60B P61A P61C P66A P67A
	16	Q37A
	17	R01A R50A R50B R50C R60B
	18B	T01A T36A T36B T60A T60B T60C T60F
	19	U66A
	20	V01Z
	21A	W01A W01B W01C W60A W60B W61A
	21B	X37A X86A
	22	Y02A Y02B
	23	Z02Z
	Prä	A06A A06B A06C A07A A07B A07C A11A A11B A11C A11D A46A A46C A94A A94B A94C A97A A97B A97C A97D B61B B61C
99.B7.4K‡↔		INTK I INTK II SVB VB

CHOP	MDC	DRG
	01	B01A B02A B09A B20A B36A B36B B36C B60A B76A B76B B76C B87A
	03	D02A D37A D37B D87Z
	04	E36A E36B E36C E36D E87A E87B
	05	F36A F36B F36C F36D F37A F37B F73A F86A F98A
	06	G03A G09A G12A G13A G22A G37Z G38A G38B G38C G67A G87A
	07	H01A H01B H01C H07A H07B H33Z H37A H87Z
	09	J87Z
	10	K37A K37B K87Z
	11	L37A L37B L87Z
	12	M38A
	13	N01B N02A N04A N33Z
	14	O38A
	15	P02A P03A P04A P04B P05A P05B P05C P05D P37Z P60B P61A P61C P66A P67A
	16	Q37A
	17	R01A R50A R50B R50C R60B
	18B	T01A T36A T36B T60A T60B T60C T60F
	19	U66A
	20	V01Z
	21A	W01A W01B W01C W60A W60B W61A
	21B	X37A X86A
	22	Y02A Y02B
	23	Z02Z
	Prä	A06A A06B A06C A07A A07B A07C A11A A11B A11C A11D A46A A46C A94A A94B A94C A97A A97B A97C A97D B61B B61C
99.B7.4L‡↔		INTK I INTK II SVB VB
	01	B01A B02A B09A B20A B36A B36B B36C B60A B76A B76B B76C B87A
	03	D02A D37A D37B D87Z
	04	E36A E36B E36C E36D E87A E87B
	05	F36A F36B F36C F36D F37A F37B F73A F86A F98A
	06	G03A G09A G12A G13A G22A G37Z G38A G38B G38C G67A G87A
	07	H01A H01B H01C H07A H07B H33Z H37A H87Z

PROC

PROC

CHOP	MDC	DRG
	09	J87Z
	10	K37A K37B K87Z
	11	L37A L37B L87Z
	12	M38A
	13	N01B N02A N04A N33Z
	14	O38A
	15	P02A P03A P04A P04B P05A P05B P05C P05D P37Z P60B P61A P61C P66A P67A
	16	Q37A
	17	R01A R50A R50B R50C R60B
	18B	T01A T36A T36B T60A T60B T60C T60F
	19	U66A
	20	V01Z
	21A	W01A W01B W01C W60A W60B W61A
	21B	X37A X86A
	22	Y02A Y02B
	23	Z02Z
	Prä	A06A A06B A06C A07A A07B A07C A11A A11B A11C A11D A46A A46C A94A A94B A94C A97A A97B A97C A97D B61B B61C
99.B7.4M‡↔		INTK I INTK II SVB VB
	01	B01A B02A B09A B20A B36A B36B B36C B60A B76A B76B B76C B87A
	03	D02A D37A D37B D87Z
	04	E36A E36B E36C E36D E87A E87B
	05	F36A F36B F36C F36D F37A F37B F73A F86A F98A
	06	G03A G09A G12A G13A G22A G37Z G38A G38B G38C G67A G87A
	07	H01A H01B H01C H07A H07B H33Z H37A H87Z
	09	J87Z
	10	K37A K37B K87Z
	11	L37A L37B L87Z
	12	M38A
	13	N01B N02A N04A N33Z
	14	O38A
	15	P02A P03A P04A P04B P05A P05B P05C P05D P37Z P60B P61A P61C P66A P67A
	16	Q37A
	17	R01A R50A R50B R50C R60B
	18B	T01A T36A T36B T60A T60B T60C T60F
	19	U66A
	20	V01Z
	21A	W01A W01B W01C W60A W60B W61A
	21B	X37A X86A
	22	Y02A Y02B
	23	Z02Z
	Prä	A06A A06B A06C A07A A07B A07C A11A A11B A11C A11D A46A A46C A94A A94B A94C A97A A97B A97C A97D B61B B61C
99.B7.4N‡↔		INTK I INTK II SVB VB
	01	B01A B02A B09A B20A B36A B36B B36C B60A B76A B76B B76C B87A
	03	D02A D37A D37B D87Z
	04	E36A E36B E36C E36D E87A E87B
	05	F36A F36B F36C F36D F37A F37B F73A F86A F98A
	06	G03A G09A G12A G13A G22A G37Z G38A G38B G38C G67A G87A
	07	H01A H01B H01C H07A H07B H33Z H37A H87Z
	09	J87Z
	10	K37A K37B K87Z
	11	L37A L37B L87Z
	12	M38A
	13	N01B N02A N04A N33Z
	14	O38A
	15	P02A P03A P04A P04B P05A P05B P05C P05D P37Z P60B P61A P61C P66A P67A
	16	Q37A
	17	R01A R50A R50B R50C R60B
	18B	T01A T36A T36B T60A T60B T60C T60F
	19	U66A
	20	V01Z
	21A	W01A W01B W01C W60A W60B W61A
	21B	X37A X86A
	22	Y02A Y02B
	23	Z02Z
	Prä	A06A A06B A06C A07A A07B A07C A11A A11B A11C A11D A46A A46C A94A A94B A94C A97A A97B A97C A97D B61B B61C
99.B7.4O‡↔		INTK I INTK II SVB VB
	01	B01A B02A B09A B20A B36A B36B B36C B60A B76A B76B B76C B87A
	03	D02A D37A D37B D87Z
	04	E36A E36B E36C E36D E87A E87B
	05	F36A F36B F36C F36D F37A F37B F73A F86A F98A
	06	G03A G09A G12A G13A G22A G37Z G38A G38B G38C G67A G87A
	07	H01A H01B H01C H07A H07B H33Z H37A H87Z
	09	J87Z
	10	K37A K37B K87Z
	11	L37A L37B L87Z
	12	M38A
	13	N01B N02A N04A N33Z
	14	O38A
	15	P02A P03A P04A P04B P05A P05B P05C P05D P37Z P60B P61A P61C P66A P67A
	16	Q37A
	17	R01A R50A R50B R50C R60B
	18B	T01A T36A T36B T60A T60B T60C T60F
	19	U66A
	20	V01Z
	21A	W01A W01B W01C W60A W60B W61A
	21B	X37A X86A
	22	Y02A Y02B
	23	Z02Z
	Prä	A06A A06B A06C A07A A07B A07C A11A A11B A11C A11D A46A A46C A94A A94B A94C A97A A97B A97C A97D B61B B61C
99.B7.4P‡↔		INTK I INTK II SVB VB
	01	B01A B02A B09A B20A B36A B36B B36C B60A B76A B76B B76C B87A
	03	D02A D37A D37B D87Z
	04	E36A E36B E36C E36D E87A E87B
	05	F36A F36B F36C F36D F37A F37B F73A F86A F98A
	06	G03A G09A G12A G13A G22A G37Z G38A G38B G38C G67A G87A
	07	H01A H01B H01C H07A H07B H33Z H37A H87Z
	09	J87Z
	10	K37A K37B K87Z

CHOP	MDC	DRG
	11	L37A L37B L87Z
	12	M38A
	13	N01B N02A N04A N33Z
	14	O38A
	15	P02A P03A P04A P04B P05A P05B P05C P05D P37Z P60B P61A P61C P66A P67A
	16	Q37A
	17	R01A R50A R50B R50C R60B
	18B	T01A T36A T36B T60A T60B T60C T60F
	19	U66A
	20	V01Z
	21A	W01A W01B W01C W60A W60B W61A
	21B	X37A X86A
	22	Y02A Y02B
	23	Z02Z
	Prä	A06A A06B A06C A07A A07B A07C A11A A11B A11C A11D A46A A46C A94A A94B A94C A97A A97B A97C A97D B61B B61C
99.B7.4Q‡↔		INTK I INTK II SVB VB
	01	B01A B02A B09A B20A B36A B36B B36C B60A B76A B76B B76C B87A
	03	D02A D37A D37B D87Z
	04	E36A E36B E36C E36D E87A E87B
	05	F36A F36B F36C F36D F37A F37B F73A F86A F98A
	06	G03A G09A G12A G13A G22A G37Z G38A G38B G38C G67A G87A
	07	H01A H01B H01C H07A H07B H33Z H37A H87Z
	09	J87Z
	10	K37A K37B K87Z
	11	L37A L37B L87Z
	12	M38A
	13	N01B N02A N04A N33Z
	14	O38A
	15	P02A P03A P04A P04B P05A P05B P05C P05D P37Z P60B P61A P61C P66A P67A
	16	Q37A
	17	R01A R50A R50B R50C R60B
	18B	T01A T36A T36B T60A T60B T60C T60F
	19	U66A
	20	V01Z
	21A	W01A W01B W01C W60A W60B W61A
	21B	X37A X86A
	22	Y02A Y02B
	23	Z02Z
	Prä	A06A A06B A06C A07A A07B A07C A11A A11B A11C A11D A46A A46C A94A A94B A94C A97A A97B A97C A97D B61B B61C
99.B7.4R‡↔		INTK I INTK II SVB VB
	01	B01A B02A B09A B20A B36A B36B B36C B60A B76A B76B B76C B87A
	03	D02A D37A D37B D87Z
	04	E36A E36B E36C E36D E87A E87B
	05	F36A F36B F36C F36D F37A F37B F73A F86A F98A
	06	G03A G09A G12A G13A G22A G37Z G38A G38B G38C G67A G87A
	07	H01A H01B H01C H07A H07B H33Z H37A H87Z
	09	J87Z
	10	K37A K37B K87Z
	11	L37A L37B L87Z
	12	M38A
	13	N01B N02A N04A N33Z
	14	O38A
	15	P02A P03A P04A P04B P05A P05B P05C P05D P37Z P60B P61A P61C P66A P67A
	16	Q37A
	17	R01A R50A R50B R50C R60B
	18B	T01A T36A T36B T60A T60B T60C T60F
	19	U66A
	20	V01Z
	21A	W01A W01B W01C W60A W60B W61A
	21B	X37A X86A
	22	Y02A Y02B
	23	Z02Z
	Prä	A06A A06B A06C A07A A07B A07C A11A A11B A11C A11D A46A A46C A94A A94B A94C A97A A97B A97C A97D B61B B61C
99.B7.4S‡↔		INTK I INTK II SVB VB
	01	B01A B02A B09A B20A B36A B36B B36C B60A B76A B76B B76C B87A
	03	D02A D37A D37B D87Z
	04	E36A E36B E36C E36D E87A E87B
	05	F36A F36B F36C F36D F37A F37B F73A F86A F98A
	06	G03A G09A G12A G13A G22A G37Z G38A G38B G38C G67A G87A
	07	H01A H01B H01C H07A H07B H33Z H37A H87Z
	09	J87Z
	10	K37A K37B K87Z
	11	L37A L37B L87Z
	12	M38A
	13	N01B N02A N04A N33Z
	14	O38A
	15	P02A P03A P04A P04B P05A P05B P05C P05D P37Z P60B P61A P61C P66A P67A
	16	Q37A
	17	R01A R50A R50B R50C R60B
	18B	T01A T36A T36B T60A T60B T60C T60F
	19	U66A
	20	V01Z
	21A	W01A W01B W01C W60A W60B W61A
	21B	X37A X86A
	22	Y02A Y02B
	23	Z02Z
	Prä	A06A A06B A06C A07A A07B A07C A11A A11B A11C A11D A46A A46C A94A A94B A94C A97A A97B A97C A97D B61B B61C
99.B7.52‡↔	01	B09A B60A B70H B80A B81A B81B B86A
	03	D87Z
	04	E87A E87B
	05	F73A
	06	G22A G86B
	14	O02A
	15	P60B P65B P66B P67A P67B
	21B	X62A X86B
99.B7.53‡↔	Prä	A94A A94B A97A A97B B61A
	01	B01A B02A B09A B20A B20B B20C B60A B76A B76B B76C B87A
	03	D87Z
	04	E36A E36B E36C E36D E87A E87B E90A E90B E90C
	05	F36A F36B F36C F36D F36E F37A F37B F73A F86A

PROC

PROC

CHOP	MDC	DRG
	06	G09A G12A G13A G22A G38A G38B G38C G67A G87A
	07	H07A H07B H37A H37B H87Z
	08	I02A I02B I02C I08A I09A I29A
	09	J33Z J87Z
	10	K37A K37B K87Z
	11	L37A L37B L87Z
	12	M38A M38B
	13	N01B N02A N04A N33Z
	14	O38A O38B
	15	P60B P65B P66B P67A
	16	Q37A
	17	R01A
	18B	T60A T60B T60C T60F
	21A	W01A W01B W01C W01D W60A W60B
	21B	X37A X86A
	22	Y02A Y02B
99.B7.54‡↔	Prä	A11A A11B A11C A11D A46A A46B A46C A46D A90A A90B A90C A94A A94B A94C A97A A97B A97C A97D B61A B61B B61C
	01	B01A B02A B09A B20A B36A B36B B36C B60A B76A B76B B76C B87A B90A B90B
	03	D02A D37A D37B D87Z
	04	E36A E36B E36C E36D E87A E87B E90A E90B E90C
	05	F36A F36B F36C F36D F36E F37A F37B F73A F86A F90A F90B F90C F98A
	06	G03A G09A G12A G13A G22A G37Z G38A G38B G38C G67A G87A
	07	H01A H01B H01C H07A H07B H33Z H37A H87Z
	08	I02A I02B I02C I06A I06B I08A I09A I10A I13A I29A I31A I43A I46A I87A I95A I95B
	09	J33Z J87Z
	10	K37A K37B K87Z
	11	L37A L37B L87Z
	12	M38A
	13	N01B N02A N04A N33Z
	14	O38A
	15	P05A P05B P05C P05D P60B P65A P66A P67A
	16	Q37A
	17	R01A R50A R50B R50C R60B
	18B	T01A T36A T36B T36C T60A T60B T60C T60F
	19	U61A U66A
	20	V01Z
	21A	W01A W01B W01C W01D W60A W60B W61A
	21B	X37A X86A
	22	Y02A Y02B
	23	Z02Z
99.B7.55‡↔		INTK I VB
	01	B01A B02A B09A B20A B36A B36B B36C B60A B76A B76B B76C B87A
	03	D02A D37A D37B D87Z
	04	E36A E36B E36C E36D E87A E87B
	05	F36A F36B F36C F36D F36E F37A F37B F73A F86A F98A
	06	G03A G09A G12A G13A G22A G37Z G38A G38B G38C G67A G87A
	07	H01A H01B H01C H07A H07B H33Z H37A H87Z
	09	J87Z
	10	K37A K37B K87Z
	11	L37A L37B L87Z
	12	M38A
	13	N01B N02A N04A N33Z
	14	O38A
	15	P02A P03A P03B P04A P04B P04C P05A P05B P05C P05D P60B P66A P67A
	16	Q37A
	17	R01A R50A R50B R50C R60B
	18B	T01A T36A T36B T36C T60A T60B T60C T60F
	19	U66A
	20	V01Z
	21A	W01A W01B W01C W01D W60A W60B W61A
	21B	X37A X86A
	22	Y02A Y02B
	23	Z02Z
	Prä	A11A A11B A11C A11D A46A A46B A46C A46D A94A A94B A94C A97A A97B A97C A97D B61A B61C
99.B7.56‡↔		INTK I VB
	01	B01A B02A B09A B20A B36A B36B B36C B60A B76A B76B B76C B87A
	03	D02A D37A D37B D87Z
	04	E36A E36B E36C E36D E87A E87B
	05	F36A F36B F36C F36D F37A F37B F73A F86A F98A
	06	G03A G09A G12A G13A G22A G37Z G38A G38B G38C G67A G87A
	07	H01A H01B H01C H07A H07B H33Z H37A H87Z
	09	J87Z
	10	K37A K37B K87Z
	11	L37A L37B L87Z
	12	M38A
	13	N01B N02A N04A N33Z
	14	O38A
	15	P02A P03A P03B P04A P04B P05A P05B P05C P05D P60B P66A P67A
	16	Q37A
	17	R01A R50A R50B R50C R60B
	18B	T01A T36A T36B T36C T60A T60B T60C T60F
	19	U66A
	20	V01Z
	21A	W01A W01B W01C W60A W60B W61A
	21B	X37A X86A
	22	Y02A Y02B
	23	Z02Z
	Prä	A11A A11B A11C A11D A46A A46C A94A A94C A97A A97B A97C A97D B61A B61C
99.B7.57‡↔		INTK I VB
	01	B01A B02A B09A B20A B36A B36B B36C B60A B76A B76B B76C B87A
	03	D02A D37A D37B D87Z
	04	E36A E36B E36C E36D E87A E87B
	05	F36A F36B F36C F36D F37A F37B F73A F86A F98A
	06	G03A G09A G12A G13A G22A G37Z G38A G38B G38C G67A G87A
	07	H01A H01B H01C H07A H07B H33Z H37A H87Z
	09	J87Z
	10	K37A K37B K87Z
	11	L37A L37B L87Z
	12	M38A
	13	N01B N02A N04A N33Z
	14	O38A
	15	P02A P02B P03A

CHOP	MDC	DRG
		P03B P04A P04B
		P05A P05B P05C
		P05D P60B P66A
		P67A
	16	Q37A
	17	R01A R50A R50B
		R50C R60B
	18B	T01A T36A T36B
		T60A T60B T60C
		T60F
	19	U66A
	20	V01Z
	21A	W01A W01B W01C
		W60A W60B W61A
	21B	X37A X86A
	22	Y02A Y02B
	23	Z02Z
	Prä	A06A A06B A06C
		A07A A07B A07C
		A11A A11B A11C
		A11D A46A A46C
		A94A A94B A94C
		A97A A97B A97C
		A97D B61B B61C
99.B7.58‡↔		INTK I INTK II VB
	01	B01A B02A B09A
		B20A B36A B36B
		B36C B60A B76A
		B76B B76C B87A
	03	D02A D37A D37B
		D87Z
	04	E36A E36B E36C
		E36D E87A E87B
	05	F36A F36B F36C
		F36D F37A F37B
		F73A F86A F98A
	06	G03A G09A G12A
		G13A G22A G37Z
		G38A G38B G38C
		G67A G87A
	07	H01A H01B H01C
		H07A H07B H33Z
		H37A H87Z
	09	J87Z
	10	K37A K37B K87Z
	11	L37A L37B L87Z
	12	M38A
	13	N01B N02A N04A
		N33Z
	14	O38A
	15	P02A P02B P03A
		P03B P04A P04B
		P05A P05B P05C
		P05D P60B P66A
		P67A
	16	Q37A
	17	R01A R50A R50B
		R50C R60B
	18B	T01A T36A T36B
		T60A T60B T60C
		T60F
	19	U66A
	20	V01Z
	21A	W01A W01B W01C
		W60A W60B W61A
	21B	X37A X86A
	22	Y02A Y02B
	23	Z02Z
	Prä	A06A A06B A06C
		A07A A07B A07C

CHOP	MDC	DRG
		A11A A11B A11C
		A11D A46A A46C
		A94A A94B A94C
		A97A A97B A97C
		A97D B61B B61C
99.B7.5A‡↔		INTK I INTK II VB
	01	B01A B02A B09A
		B20A B36A B36B
		B36C B60A B76A
		B76B B76C B87A
	03	D02A D37A D37B
		D87Z
	04	E36A E36B E36C
		E36D E87A E87B
	05	F36A F36B F36C
		F36D F37A F37B
		F73A F86A F98A
	06	G03A G09A G12A
		G13A G22A G37Z
		G38A G38B G38C
		G67A G87A
	07	H01A H01B H01C
		H07A H07B H33Z
		H37A H87Z
	09	J87Z
	10	K37A K37B K87Z
	11	L37A L37B L87Z
	12	M38A
	13	N01B N02A N04A
		N33Z
	14	O38A
	15	P02A P02B P03A
		P03B P04A P04B
		P05A P05B P05C
		P05D P60B P66A
		P67A
	16	Q37A
	17	R01A R50A R50B
		R50C R60B
	18B	T01A T36A T36B
		T60A T60B T60C
		T60F
	19	U66A
	20	V01Z
	21A	W01A W01B W01C
		W60A W60B W61A
	21B	X37A X86A
	22	Y02A Y02B
	23	Z02Z
	Prä	A06A A06B A06C
		A07A A07B A07C
		A11A A11B A11C
		A11D A46A A46C
		A94A A94B A94C
		A97A A97B A97C
		A97D B61B B61C
99.B7.5B‡↔		INTK I INTK II VB
	01	B01A B02A B09A
		B20A B36A B36B
		B36C B60A B76A
		B76B B76C B87A
	03	D02A D37A D37B
		D87Z
	04	E36A E36B E36C
		E36D E87A E87B
	05	F36A F36B F36C
		F36D F37A F37B
		F73A F86A F98A
	06	G03A G09A G12A
		G13A G22A G37Z

CHOP	MDC	DRG
		G38A G38B G38C
		G67A G87A
	07	H01A H01B H01C
		H07A H07B H33Z
		H37A H87Z
	09	J87Z
	10	K37A K37B K87Z
	11	L37A L37B L87Z
	12	M38A
	13	N01B N02A N04A
		N33Z
	14	O38A
	15	P02A P03A P03B
		P04A P04B P05A
		P05B P05C P05D
		P60B P66A P67A
	16	Q37A
	17	R01A R50A R50B
		R50C R60B
	18B	T01A T36A T36B
		T60A T60B T60C
		T60F
	19	U66A
	20	V01Z
	21A	W01A W01B W01C
		W60A W60B W61A
	21B	X37A X86A
	22	Y02A Y02B
	23	Z02Z
	Prä	A06A A06B A06C
		A07A A07B A07C
		A11A A11B A11C
		A11D A46A A46C
		A94A A94B A94C
		A97A A97B A97C
		A97D B61B B61C
99.B7.5C‡↔		INTK I INTK II VB
	01	B01A B02A B09A
		B20A B36A B36B
		B36C B60A B76A
		B76B B76C B87A
	03	D02A D37A D37B
		D87Z
	04	E36A E36B E36C
		E36D E87A E87B
	05	F36A F36B F36C
		F36D F37A F37B
		F73A F86A F98A
	06	G03A G09A G12A
		G13A G22A G37Z
		G38A G38B G38C
		G67A G87A
	07	H01A H01B H01C
		H07A H07B H33Z
		H37A H87Z
	09	J87Z
	10	K37A K37B K87Z
	11	L37A L37B L87Z
	12	M38A
	13	N01B N02A N04A
		N33Z
	14	O38A
	15	P02A P03A P04A
		P04B P05A P05B
		P05C P05D P60B
		P66A P67A
	16	Q37A
	17	R01A R50A R50B
		R50C R60B
	18B	T01A T36A T36B

PROC

PROC

CHOP	MDC	DRG
		T60A T60B T60C
		T60F
	19	U66A
	20	V01Z
	21A	W01A W01B W01C
		W60A W60B W61A
	21B	X37A X86A
	22	Y02A Y02B
	23	Z02Z
	Prä	A06A A06B A06C
		A07A A07B A07C
		A11A A11B A11C
		A11D A46A A46C
		A94A A94B A94C
		A97A A97B A97C
		A97D B61B B61C
99.B7.5D‡↔		INTK I INTK II SVB
		VB
	01	B01A B02A B09A
		B20A B36A B36B
		B36C B60A B76A
		B76B B76C B87A
	03	D02A D37A D37B
		D87Z
	04	E36A E36B E36C
		E36D E87A E87B
	05	F36A F36B F36C
		F36D F37A F37B
		F73A F86A F98A
	06	G03A G09A G12A
		G13A G22A G37Z
		G38A G38B G38C
		G67A G87A
	07	H01A H01B H01C
		H07A H07B H33Z
		H37A H87Z
	09	J87Z
	10	K37A K37B K87Z
	11	L37A L37B L87Z
	12	M38A
	13	N01B N02A N04A
		N33Z
	14	O38A
	15	P02A P03A P04A
		P04B P05A P05B
		P05C P05D P60B
		P66A P67A
	16	Q37A
	17	R01A R50A R50B
		R50C R60B
	18B	T01A T36A T36B
		T60A T60B T60C
		T60F
	19	U66A
	20	V01Z
	21A	W01A W01B W01C
		W60A W60B W61A
	21B	X37A X86A
	22	Y02A Y02B
	23	Z02Z
	Prä	A06A A06B A06C
		A07A A07B A07C
		A11A A11B A11C
		A11D A46A A46C
		A94A A94B A94C
		A97A A97B A97C
		A97D B61B B61C
99.B7.5E‡↔		INTK I INTK II SVB
		VB
	01	B01A B02A B09A
		B20A B36A B36B
		B36C B60A B76A
		B76B B76C B87A
	03	D02A D37A D37B
		D87Z
	04	E36A E36B E36C
		E36D E87A E87B
	05	F36A F36B F36C
		F36D F37A F37B
		F73A F86A F98A
	06	G03A G09A G12A
		G13A G22A G37Z
		G38A G38B G38C
		G67A G87A
	07	H01A H01B H01C
		H07A H07B H33Z
		H37A H87Z
	09	J87Z
	10	K37A K37B K87Z
	11	L37A L37B L87Z
	12	M38A
	13	N01B N02A N04A
		N33Z
	14	O38A
	15	P02A P03A P04A
		P04B P05A P05B
		P05C P05D P60B
		P66A P67A
	16	Q37A
	17	R01A R50A R50B
		R50C R60B
	18B	T01A T36A T36B
		T60A T60B T60C
		T60F
	19	U66A
	20	V01Z
	21A	W01A W01B W01C
		W60A W60B W61A
	21B	X37A X86A
	22	Y02A Y02B
	23	Z02Z
	Prä	A06A A06B A06C
		A07A A07B A07C
		A11A A11B A11C
		A11D A46A A46C
		A94A A94B A94C
		A97A A97B A97C
		A97D B61B B61C
99.B7.5F‡↔		INTK I INTK II SVB
		VB
	01	B01A B02A B09A
		B20A B36A B36B
		B36C B60A B76A
		B76B B76C B87A
	03	D02A D37A D37B
		D87Z
	04	E36A E36B E36C
		E36D E87A E87B
	05	F36A F36B F36C
		F36D F37A F37B
		F73A F86A F98A
	06	G03A G09A G12A
		G13A G22A G37Z
		G38A G38B G38C
		G67A G87A
	07	H01A H01B H01C
		H07A H07B H33Z
		H37A H87Z
	09	J87Z
	10	K37A K37B K87Z
	11	L37A L37B L87Z
	12	M38A
	13	N01B N02A N04A
		N33Z
	14	O38A
	15	P02A P03A P04A
		P04B P05A P05B
		P05C P05D P60B
		P66A P67A
	16	Q37A
	17	R01A R50A R50B
		R50C R60B
	18B	T01A T36A T36B
		T60A T60B T60C
		T60F
	19	U66A
	20	V01Z
	21A	W01A W01B W01C
		W60A W60B W61A
	21B	X37A X86A
	22	Y02A Y02B
	23	Z02Z
	Prä	A06A A06B A06C
		A07A A07B A07C
		A11A A11B A11C
		A11D A46A A46C
		A94A A94B A94C
		A97A A97B A97C
		A97D B61B B61C
99.B7.5G‡↔		INTK I INTK II SVB
		VB
	01	B01A B02A B09A
		B20A B36A B36B
		B36C B60A B76A
		B76B B76C B87A
	03	D02A D37A D37B
		D87Z
	04	E36A E36B E36C
		E36D E87A E87B
	05	F36A F36B F36C
		F36D F37A F37B
		F73A F86A F98A
	06	G03A G09A G12A
		G13A G22A G37Z
		G38A G38B G38C
		G67A G87A
	07	H01A H01B H01C
		H07A H07B H33Z
		H37A H87Z
	09	J87Z
	10	K37A K37B K87Z
	11	L37A L37B L87Z
	12	M38A
	13	N01B N02A N04A
		N33Z
	14	O38A
	15	P02A P03A P04A
		P04B P05A P05B
		P05C P05D P60B
		P61A P61B P61C
		P66A P67A
	16	Q37A
	17	R01A R50A R50B
		R50C R60B
	18B	T01A T36A T36B
		T60A T60B T60C
		T60F
	19	U66A
	20	V01Z
	21A	W01A W01B W01C

CHOP	MDC	DRG
		W60A W60B W61A
	21B	X37A X86A
	22	Y02A Y02B
	23	Z02Z
	Prä	A06A A06B A06C
		A07A A07B A07C
		A11A A11B A11C
		A11D A46A A46C
		A94A A94B A94C
		A97A A97B A97C
		A97D B61B B61C
99.B7.5H‡↔		INTK I INTK II SVB
		VB
	01	B01A B02A B09A
		B20A B36A B36B
		B36C B60A B76A
		B76B B76C B87A
	03	D02A D37A D37B
		D87Z
	04	E36A E36B E36C
		E36D E87A E87B
	05	F36A F36B F36C
		F36D F37A F37B
		F73A F86A F98A
	06	G03A G09A G12A
		G13A G22A G37Z
		G38A G38B G38C
		G67A G87A
	07	H01A H01B H01C
		H07A H07B H33Z
		H37A H87Z
	09	J87Z
	10	K37A K37B K87Z
	11	L37A L37B L87Z
	12	M38A
	13	N01B N02A N04A
		N33Z
	14	O38A
	15	P02A P03A P04A
		P04B P05A P05B
		P05C P05D P60B
		P61A P61C P66A
		P67A
	16	Q37A
	17	R01A R50A R50B
		R50C R60B
	18B	T01A T36A T36B
		T60A T60B T60C
		T60F
	19	U66A
	20	V01Z
	21A	W01A W01B W01C
		W60A W60B W61A
	21B	X37A X86A
	22	Y02A Y02B
	23	Z02Z
	Prä	A06A A06B A06C
		A07A A07B A07C
		A11A A11B A11C
		A11D A46A A46C
		A94A A94B A94C
		A97A A97B A97C
		A97D B61B B61C
99.B7.5I‡↔		INTK I INTK II SVB
		VB
	01	B01A B02A B09A
		B20A B36A B36B
		B36C B60A B76A
		B76B B76C B87A
	03	D02A D37A D37B

CHOP	MDC	DRG
		D87Z
	04	E36A E36B E36C
		E36D E87A E87B
	05	F36A F36B F36C
		F36D F37A F37B
		F73A F86A F98A
	06	G03A G09A G12A
		G13A G22A G37Z
		G38A G38B G38C
		G67A G87A
	07	H01A H01B H01C
		H07A H07B H33Z
		H37A H87Z
	09	J87Z
	10	K37A K37B K87Z
	11	L37A L37B L87Z
	12	M38A
	13	N01B N02A N04A
		N33Z
	14	O38A
	15	P02A P03A P04A
		P04B P05A P05B
		P05C P05D P60B
		P61A P61C P66A
		P67A
	16	Q37A
	17	R01A R50A R50B
		R50C R60B
	18B	T01A T36A T36B
		T60A T60B T60C
		T60F
	19	U66A
	20	V01Z
	21A	W01A W01B W01C
		W60A W60B W61A
	21B	X37A X86A
	22	Y02A Y02B
	23	Z02Z
	Prä	A06A A06B A06C
		A07A A07B A07C
		A11A A11B A11C
		A11D A46A A46C
		A94A A94B A94C
		A97A A97B A97C
		A97D B61B B61C
99.B7.5J‡↔		INTK I INTK II SVB
		VB
	01	B01A B02A B09A
		B20A B36A B36B
		B36C B60A B76A
		B76B B76C B87A
	03	D02A D37A D37B
		D87Z
	04	E36A E36B E36C
		E36D E87A E87B
	05	F36A F36B F36C
		F36D F37A F37B
		F73A F86A F98A
	06	G03A G09A G12A
		G13A G22A G37Z
		G38A G38B G38C
		G67A G87A
	07	H01A H01B H01C
		H07A H07B H33Z
		H37A H87Z
	09	J87Z
	10	K37A K37B K87Z
	11	L37A L37B L87Z
	12	M38A
	13	N01B N02A N04A

CHOP	MDC	DRG
		N33Z
	14	O38A
	15	P02A P03A P04A
		P04B P05A P05B
		P05C P05D P37Z
		P60B P61A P61C
		P66A P67A
	16	Q37A
	17	R01A R50A R50B
		R50C R60B
	18B	T01A T36A T36B
		T60A T60B T60C
		T60F
	19	U66A
	20	V01Z
	21A	W01A W01B W01C
		W60A W60B W61A
	21B	X37A X86A
	22	Y02A Y02B
	23	Z02Z
	Prä	A06A A06B A06C
		A07A A07B A07C
		A11A A11B A11C
		A11D A46A A46C
		A94A A94B A94C
		A97A A97B A97C
		A97D B61B B61C
99.B7.5K‡↔		INTK I INTK II SVB
		VB
	01	B01A B02A B09A
		B20A B36A B36B
		B36C B60A B76A
		B76B B76C B87A
	03	D02A D37A D37B
		D87Z
	04	E36A E36B E36C
		E36D E87A E87B
	05	F36A F36B F36C
		F36D F37A F37B
		F73A F86A F98A
	06	G03A G09A G12A
		G13A G22A G37Z
		G38A G38B G38C
		G67A G87A
	07	H01A H01B H01C
		H07A H07B H33Z
		H37A H87Z
	09	J87Z
	10	K37A K37B K87Z
	11	L37A L37B L87Z
	12	M38A
	13	N01B N02A N04A
		N33Z
	14	O38A
	15	P02A P03A P04A
		P04B P05A P05B
		P05C P05D P37Z
		P60B P61A P61C
		P66A P67A
	16	Q37A
	17	R01A R50A R50B
		R50C R60B
	18B	T01A T36A T36B
		T60A T60B T60C
		T60F
	19	U66A
	20	V01Z
	21A	W01A W01B W01C
		W60A W60B W61A
	21B	X37A X86A

PROC

PROC

CHOP	MDC	DRG
	22	Y02A Y02B
	23	Z02Z
	Prä	A06A A06B A06C
		A07A A07B A07C
		A11A A11B A11C
		A11D A46A A46C
		A94A A94B A94C
		A97A A97B A97C
		A97D B61B B61C
99.B7.5L‡↔		INTK I INTK II SVB
		VB
	01	B01A B02A B09A
		B20A B36A B36B
		B36C B60A B76A
		B76B B76C B87A
	03	D02A D37A D37B
		D87Z
	04	E36A E36B E36C
		E36D E87A E87B
	05	F36A F36B F36C
		F36D F37A F37B
		F73A F86A F98A
	06	G03A G09A G12A
		G13A G22A G37Z
		G38A G38B G38C
		G67A G87A
	07	H01A H01B H01C
		H07A H07B H33Z
		H37A H87Z
	09	J87Z
	10	K37A K37B K87Z
	11	L37A L37B L87Z
	12	M38A
	13	N01B N02A N04A
		N33Z
	14	O38A
	15	P02A P03A P04A
		P04B P05A P05B
		P05C P05D P37Z
		P60B P61A P61C
		P66A P67A
	16	Q37A
	17	R01A R50A R50B
		R50C R60B
	18B	T01A T36A T36B
		T60A T60B T60C
		T60F
	19	U66A
	20	V01Z
	21A	W01A W01B W01C
		W60A W60B W61A
	21B	X37A X86A
	22	Y02A Y02B
	23	Z02Z
	Prä	A06A A06B A06C
		A07A A07B A07C
		A11A A11B A11C
		A11D A46A A46C
		A94A A94B A94C
		A97A A97B A97C
		A97D B61B B61C
99.B7.5M‡↔		INTK I INTK II SVB
		VB
	01	B01A B02A B09A
		B20A B36A B36B
		B36C B60A B76A
		B76B B76C B87A
	03	D02A D37A D37B
		D87Z
	04	E36A E36B E36C

CHOP	MDC	DRG
		E36D E87A E87B
	05	F36A F36B F36C
		F36D F37A F37B
		F73A F86A F98A
	06	G03A G09A G12A
		G13A G22A G37Z
		G38A G38B G38C
		G67A G87A
	07	H01A H01B H01C
		H07A H07B H33Z
		H37A H87Z
	09	J87Z
	10	K37A K37B K87Z
	11	L37A L37B L87Z
	12	M38A
	13	N01B N02A N04A
		N33Z
	14	O38A
	15	P02A P03A P04A
		P04B P05A P05B
		P05C P05D P37Z
		P60B P61A P61C
		P66A P67A
	16	Q37A
	17	R01A R50A R50B
		R50C R60B
	18B	T01A T36A T36B
		T60A T60B T60C
		T60F
	19	U66A
	20	V01Z
	21A	W01A W01B W01C
		W60A W60B W61A
	21B	X37A X86A
	22	Y02A Y02B
	23	Z02Z
	Prä	A06A A06B A06C
		A07A A07B A07C
		A11A A11B A11C
		A11D A46A A46C
		A94A A94B A94C
		A97A A97B A97C
		A97D B61B B61C
99.B7.5N‡↔		INTK I INTK II SVB
		VB
	01	B01A B02A B09A
		B20A B36A B36B
		B36C B60A B76A
		B76B B76C B87A
	03	D02A D37A D37B
		D87Z
	04	E36A E36B E36C
		E36D E87A E87B
	05	F36A F36B F36C
		F36D F37A F37B
		F73A F86A F98A
	06	G03A G09A G12A
		G13A G22A G37Z
		G38A G38B G38C
		G67A G87A
	07	H01A H01B H01C
		H07A H07B H33Z
		H37A H87Z
	09	J87Z
	10	K37A K37B K87Z
	11	L37A L37B L87Z
	12	M38A
	13	N01B N02A N04A
		N33Z
	14	O38A

CHOP	MDC	DRG
	15	P02A P03A P04A
		P04B P05A P05B
		P05C P05D P37Z
		P60B P61A P61C
		P66A P67A
	16	Q37A
	17	R01A R50A R50B
		R50C R60B
	18B	T01A T36A T36B
		T60A T60B T60C
		T60F
	19	U66A
	20	V01Z
	21A	W01A W01B W01C
		W60A W60B W61A
	21B	X37A X86A
	22	Y02A Y02B
	23	Z02Z
	Prä	A06A A06B A06C
		A07A A07B A07C
		A11A A11B A11C
		A11D A46A A46C
		A94A A94B A94C
		A97A A97B A97C
		A97D B61B B61C
99.B7.5O‡↔		INTK I INTK II SVB
		VB
	01	B01A B02A B09A
		B20A B36A B36B
		B36C B60A B76A
		B76B B76C B87A
	03	D02A D37A D37B
		D87Z
	04	E36A E36B E36C
		E36D E87A E87B
	05	F36A F36B F36C
		F36D F37A F37B
		F73A F86A F98A
	06	G03A G09A G12A
		G13A G22A G37Z
		G38A G38B G38C
		G67A G87A
	07	H01A H01B H01C
		H07A H07B H33Z
		H37A H87Z
	09	J87Z
	10	K37A K37B K87Z
	11	L37A L37B L87Z
	12	M38A
	13	N01B N02A N04A
		N33Z
	14	O38A
	15	P02A P03A P04A
		P04B P05A P05B
		P05C P05D P37Z
		P60B P61A P61C
		P66A P67A
	16	Q37A
	17	R01A R50A R50B
		R50C R60B
	18B	T01A T36A T36B
		T60A T60B T60C
		T60F
	19	U66A
	20	V01Z
	21A	W01A W01B W01C
		W60A W60B W61A
	21B	X37A X86A
	22	Y02A Y02B
	23	Z02Z

CHOP	MDC	DRG
	Prä	A06A A06B A06C A07A A07B A07C A11A A11B A11C A11D A46A A46C A94A A94B A94C A97A A97B A97C A97D B61B B61C
99.B7.5P‡↔		INTK I INTK II SVB VB
	01	B01A B02A B09A B20A B36A B36B B36C B60A B76A B76B B76C B87A
	03	D02A D37A D37B D87Z
	04	E36A E36B E36C E36D E87A E87B
	05	F36A F36B F36C F36D F37A F37B F73A F86A F98A
	06	G03A G09A G12A G13A G22A G37Z G38A G38B G38C G67A G87A
	07	H01A H01B H01C H07A H07B H33Z H37A H87Z
	09	J87Z
	10	K37A K37B K87Z
	11	L37A L37B L87Z
	12	M38A
	13	N01B N02A N04A N33Z
	14	O38A
	15	P02A P03A P04A P04B P05A P05B P05C P05D P37Z P60B P61A P61C P66A P67A
	16	Q37A
	17	R01A R50A R50B R50C R60B
	18B	T01A T36A T36B T60A T60B T60C T60F
	19	U66A
	20	V01Z
	21A	W01A W01B W01C W60A W60B W61A
	21B	X37A X86A
	22	Y02A Y02B
	23	Z02Z
	Prä	A06A A06B A06C A07A A07B A07C A11A A11B A11C A11D A46A A46C A94A A94B A94C A97A A97B A97C A97D B61B B61C
99.B7.5Q‡↔		INTK I INTK II SVB VB
	01	B01A B02A B09A B20A B36A B36B B36C B60A B76A B76B B76C B87A
	03	D02A D37A D37B D87Z
	04	E36A E36B E36C E36D E87A E87B
	05	F36A F36B F36C F36D F37A F37B F73A F86A F98A
	06	G03A G09A G12A G13A G22A G37Z G38A G38B G38C G67A G87A
	07	H01A H01B H01C H07A H07B H33Z H37A H87Z
	09	J87Z
	10	K37A K37B K87Z
	11	L37A L37B L87Z
	12	M38A
	13	N01B N02A N04A N33Z
	14	O38A
	15	P02A P03A P04A P04B P05A P05B P05C P05D P37Z P60B P61A P61C P66A P67A
	16	Q37A
	17	R01A R50A R50B R50C R60B
	18B	T01A T36A T36B T60A T60B T60C T60F
	19	U66A
	20	V01Z
	21A	W01A W01B W01C W60A W60B W61A
	21B	X37A X86A
	22	Y02A Y02B
	23	Z02Z
	Prä	A06A A06B A06C A07A A07B A07C A11A A11B A11C A11D A46A A46C A94A A94B A94C A97A A97B A97C A97D B61B B61C
99.B7.5R‡↔		INTK I INTK II SVB VB
	01	B01A B02A B09A B20A B36A B36B B36C B60A B76A B76B B76C B87A
	03	D02A D37A D37B D87Z
	04	E36A E36B E36C E36D E87A E87B
	05	F36A F36B F36C F36D F37A F37B F73A F86A F98A
	06	G03A G09A G12A G13A G22A G37Z G38A G38B G38C G67A G87A
	07	H01A H01B H01C H07A H07B H33Z H37A H87Z
	09	J87Z
	10	K37A K37B K87Z
	11	L37A L37B L87Z
	12	M38A
	13	N01B N02A N04A N33Z
	14	O38A
	15	P02A P03A P04A P04B P05A P05B P05C P05D P37Z P60B P61A P61C P66A P67A
	16	Q37A
	17	R01A R50A R50B R50C R60B
	18B	T01A T36A T36B T60A T60B T60C T60F
	19	U66A
	20	V01Z
	21A	W01A W01B W01C W60A W60B W61A
	21B	X37A X86A
	22	Y02A Y02B
	23	Z02Z
	Prä	A06A A06B A06C A07A A07B A07C A11A A11B A11C A11D A46A A46C A94A A94B A94C A97A A97B A97C A97D B61B B61C
99.B7.5S‡↔		INTK I INTK II SVB VB
	01	B01A B02A B09A B20A B36A B36B B36C B60A B76A B76B B76C B87A
	03	D02A D37A D37B D87Z
	04	E36A E36B E36C E36D E87A E87B
	05	F36A F36B F36C F36D F37A F37B F73A F86A F98A
	06	G03A G09A G12A G13A G22A G37Z G38A G38B G38C G67A G87A
	07	H01A H01B H01C H07A H07B H33Z H37A H87Z
	09	J87Z
	10	K37A K37B K87Z
	11	L37A L37B L87Z
	12	M38A
	13	N01B N02A N04A N33Z
	14	O38A
	15	P02A P03A P04A P04B P05A P05B P05C P05D P37Z P60B P61A P61C P66A P67A
	16	Q37A
	17	R01A R50A R50B R50C R60B
	18B	T01A T36A T36B T60A T60B T60C T60F
	19	U66A
	20	V01Z
	21A	W01A W01B W01C W60A W60B W61A
	21B	X37A X86A
	22	Y02A Y02B
	23	Z02Z
	Prä	A06A A06B A06C A07A A07B A07C

PROC

PROC

CHOP	MDC	DRG
		A11A A11B A11C
		A11D A46A A46C
		A94A A94B A94C
		A97A A97B A97C
		A97D B61B B61C
99.B8.11‡↔	01	B60A B70H B77A
		B78A B80A B86A
	04	E87A E87B
	05	F49E F62C F73A
	21B	X62A X86B
	23	Z86A
99.B8.12‡↔	Prä	A94A A94B A94C
		A97A A97B B61B
		B61C B61D
	01	B01A B02A B03A
		B09A B60A B76A
		B76B B76C B87A
		B87B
	03	D87Z
	04	E02A E87A E87B
		E90A E90B E90C
	05	F41A F49E F59E
		F66A F67A F70A
		F73A F86A F87Z
	06	G09A G87A G87B
	07	H07A H07B H41A
		H87Z
	08	I02A I02B I02C
		I12A
	09	J87Z
	10	K87Z
	11	L18B L87Z
	12	M38A M38B
	13	N02A N33Z
	14	O38A O38B
	16	Q37A Q37B
	17	R01A
	18B	T60A T60B T60C
		T60F T60G
	20	V02A
	21A	W60A W60B
	21B	X37A X37B X86A
	23	Z02Z
99.B8.13‡↔	Prä	A90A A90B A90C
		A93A A94A A94B
		A94C A95A A95C
		A95D A97A A97B
		B61A B61B B61C
		B61D
	01	B01A B02A B03A
		B09A B20A B60A
		B76A B76B B76C
		B87A B90A B90B
	03	D02A D15A D15B
		D37A D37B D87Z
	04	E02A E33A E36C
		E87A E87B E90A
		E90B E90C
	05	F03B F03C F04Z
		F06A F31A F31B
		F31C F73A F75A
		F86A F87Z F90A
		F90B F90C
	06	G09A G12A G21B
		G37Z G38A G38B
		G67A G87A
	07	H01A H33Z H37A
		H37B H87Z
	08	I02A I02B I02C
		I06A I06B I08B
		I09A I09B I10A
		I12A I13A I31A
		I43A I43B I46B
		I87A I87B I95A
		I95B
	09	J33Z J87Z
	10	K37A K37B K87Z
	11	L37A L37B L87Z
	12	M38A
	13	N02A N33Z
	14	O38A
	16	Q37A Q37B
	17	R01A R61A R61B
	18B	T01A T36A T36B
		T60A T60B T60C
		T60F
	19	U66A
	20	V01Z
	21A	W60A W60B
	21B	X37A X86A
	23	Z02Z
99.B8.14‡↔	Prä	A46A A46B A46C
		A46D A90A A90B
		A90C A93A A94A
		A94B A94C A95A
		A95B A97A A97B
		B61A B61B B61C
		B61D
	01	B01A B02A B03A
		B09A B20A B60A
		B76A B76B B76C
		B87A B90A B90B
	03	D02A D15A D15B
		D37A D37B D87Z
	04	E02A E33A E36C
		E87A E87B E90A
		E90B E90C
	05	F03B F03C F04Z
		F06A F31A F31B
		F31C F37A F37B
		F73A F75A F86A
		F87Z F90A F90B
		F90C
	06	G09A G12A G21B
		G37Z G38A G38B
		G67A G87A
	07	H37A H87Z
	08	I02A I02B I02C
		I06A I06B I08B
		I09A I09B I10A
		I12A I13A I31A
		I43A I43B I46B
		I87A I87B I95A
		I95B
	09	J33Z J87Z
	10	K37A K37B K87Z
	11	L37A L37B L87Z
	12	M38A
	13	N02A N33Z
	14	O38A
	16	Q37A Q37B
	17	R01A R50A R50B
		R50C R61A R61B
	18B	T01A T36A T36B
		T36B T60A T60B
		T60C T60F
	19	U66A
	20	V01Z
	21A	W60A W60B
	21B	X37A X86A
	23	Z02Z
99.B8.15‡↔	Prä	A06A A06B A06C
		A07A A07B A07C
		A46A A46B A46C
		A46D A90A A90B
		A90C A93A A94A
		A94B A94C A95A
		A95B A97A A97B
	01	B01A B02A B03A
		B09A B20A B60A
		B76A B76B B76C
		B87A B90A B90B
	03	D02A D15A D15B
		D37A D37B D87Z
	04	E02A E33A E36A
		E36C E87A E87B
		E90A
	05	F37A F37B F73A
		F75A F86A F87Z
		F90A F90B F90C
	06	G09A G12A G21B
		G37Z G38A G38B
		G67A G87A
	07	H37A H87Z
	09	J33Z J87Z
	10	K37A K37B K87Z
	11	L37A L37B L87Z
	12	M38A
	13	N02A N33Z
	14	O38A
	16	Q37A Q37B
	17	R01A R50A R50B
		R50C R61A R61B
	18B	T01A T01C T60A
		T60B T60C T60F
	19	U66A
	20	V01Z
	21A	W01A W01B W01C
		W01D W60A W60B
		W61A
	21B	X37A X86A
	23	Z02Z
99.B8.16‡↔	Prä	A06A A06B A06C
		A07A A07B A07C
		A46A A46B A46C
		A46D A46E A90A
		A90B A90C A93A
		A94A A94B A94C
		A95A A95B A97A
		A97B
	01	B01A B02A B03A
		B09A B20A B36B
		B60A B76A B76B
		B76C B87A B90A
		B90B
	03	D02A D15A D15B
		D37A D37B D87Z
	04	E02A E33A E36A
		E36C E87A E87B
		E90A
	05	F37A F37B F73A
		F75A F86A F87Z
		F90A F90B F90C
	06	G09A G12A G21B
		G37Z G38A G38B
		G67A G87A
	07	H37A H87Z
	09	J33Z J87Z
	10	K37A K37B K87Z
	11	L37A L37B L87Z

CHOP	MDC	DRG
	12	M38A
	13	N02A N33Z
	14	O38A
	16	Q37A Q37B
	17	R01A R50A R50B
		R50C R61A R61B
	18B	T01A T01C T60A
		T60B T60C T60F
	19	U66A
	20	V01Z
	21A	W01A W01B W01C
		W01D W60A W60B
		W61A
	21B	X37A X86A
	23	Z02Z
99.B8.17‡↔	Prä	A06A A06B A06C
		A07A A07B A07C
		A46A A46B A46C
		A46D A46E A90A
		A90B A93A A94A
		A94B A94C A95A
		A95B A97A A97B
	01	B01A B02A B03A
		B09A B20A B36B
		B60A B76A B76B
		B76C B87A B90A
	03	D02A D15A D15B
		D37A D37B D87Z
	04	E02A E33A E36A
		E36C E87A E87B
		E90A
	05	F37A F37B F73A
		F75A F86A F87Z
		F90A F90B F90C
	06	G09A G12A G21B
		G37Z G38A G38B
		G67A G87A
	07	H37A H87Z
	09	J33Z J87Z
	10	K37A K37B K87Z
	11	L37A L37B L87Z
	12	M38A
	13	N02A N33Z
	14	O38A
	16	Q37A Q37B
	17	R01A R50A R50B
		R50C R61A R61B
	18B	T01A T01C T60A
		T60B T60C T60F
	19	U66A
	20	V01Z
	21A	W01A W01B W01C
		W01D W60A W60B
		W61A
	21B	X37A X86A
	23	Z02Z
99.B8.18‡↔	Prä	A06A A06B A06C
		A07A A07B A07C
		A46A A46B A46C
		A46D A46E A90A
		A90B A93A A94A
		A94B A94C A95A
		A95B A97A A97B
	01	B01A B02A B03A
		B09A B20A B36B
		B60A B76A B76B
		B76C B87A B90A
	03	D02A D15A D15B
		D37A D37B D87Z
	04	E02A E33A E36A

CHOP	MDC	DRG
		E36C E87A E87B
		E90A
	05	F37A F37B F73A
		F75A F86A F87Z
		F90A F90B F90C
	06	G09A G12A G21B
		G37Z G38A G38B
		G67A G87A
	07	H37A H87Z
	09	J33Z J87Z
	10	K37A K37B K87Z
	11	L37A L37B L87Z
	12	M38A
	13	N02A N33Z
	14	O38A
	16	Q37A Q37B
	17	R01A R50A R50B
		R50C R61A R61B
	18B	T01A T01C T60A
		T60B T60C T60F
	19	U66A
	20	V01Z
	21A	W01A W01B W01C
		W01D W60A W60B
		W61A
	21B	X37A X86A
	23	Z02Z
99.B8.1A‡↔	Prä	A06A A06B A06C
		A07A A07B A07C
		A46A A46B A46C
		A46D A46E A90A
		A90B A93A A94A
		A94B A94C A95A
		A95B A97A A97B
	01	B01A B02A B03A
		B09A B20A B36B
		B60A B76A B76B
		B76C B87A B90A
	03	D02A D15A D15B
		D37A D37B D87Z
	04	E02A E33A E36A
		E36C E87A E87B
		E90A
	05	F37A F37B F73A
		F75A F86A F87Z
		F90A F90B F90C
	06	G09A G12A G21B
		G37Z G38A G38B
		G67A G87A
	07	H37A H87Z
	09	J33Z J87Z
	10	K37A K37B K87Z
	11	L37A L37B L87Z
	12	M38A
	13	N02A N33Z
	14	O38A
	16	Q37A Q37B
	17	R01A R50A R50B
		R50C R61A R61B
	18B	T01A T01C T60A
		T60B T60C T60F
	19	U66A
	20	V01Z
	21A	W01A W01B W01C
		W01D W60A W60B
		W61A
	21B	X37A X86A
	23	Z02Z
99.B8.1B‡↔	Prä	A06A A06B A06C
		A07A A07B A07C

CHOP	MDC	DRG
		A43A A46A A46B
		A46C A46D A46E
		A90A A90B A93A
		A94A A94B A94C
		A95A A95B A97A
		A97B
	01	B01A B02A B03A
		B09A B20A B36B
		B60A B76A B76B
		B76C B87A B90A
	03	D02A D15A D15B
		D37A D37B D87Z
	04	E02A E33A E36A
		E36C E87A E87B
		E90A
	05	F37A F37B F73A
		F75A F86A F87Z
		F90A F90B F90C
	06	G09A G12A G21B
		G37Z G38A G38B
		G67A G87A
	07	H37A H87Z
	09	J33Z J87Z
	10	K37A K37B K87Z
	11	L37A L37B L87Z
	12	M38A
	13	N02A N33Z
	14	O38A
	16	Q37A Q37B
	17	R01A R50A R50B
		R50C R61A R61B
	18B	T01A T01C T60A
		T60B T60C T60F
	19	U66A
	20	V01Z
	21A	W01A W01B W01C
		W01D W60A W60B
		W61A
	21B	X37A X86A
	23	Z02Z
99.B8.1C‡↔	Prä	A06A A06B A06C
		A07A A07B A07C
		A43A A46A A46B
		A46C A46D A46E
		A90A A90B A93A
		A94A A94B A94C
		A95A A95B A97A
		A97B
	01	B01A B02A B03A
		B09A B20A B36B
		B60A B76A B76B
		B76C B87A B90A
	03	D02A D15A D15B
		D37A D37B D87Z
	04	E02A E33A E36A
		E36C E87A E87B
		E90A
	05	F37A F37B F73A
		F75A F86A F87Z
		F90A F90B F90C
	06	G09A G12A G21B
		G37Z G38A G38B
		G67A G87A
	07	H37A H87Z
	09	J33Z J87Z
	10	K37A K37B K87Z
	11	L37A L37B L87Z
	12	M38A
	13	N02A N33Z
	14	O38A

PROC

PROC

CHOP	MDC	DRG
	16	Q37A Q37B
	17	R01A R50A R50B
		R50C R61A R61B
	18B	T01A T01C T60A
		T60B T60C T60F
	19	U66A
	20	V01Z
	21A	W01A W01B W01C
		W01D W60A W60B
		W61A
	21B	X37A X86A
	23	Z02Z
99.B8.1D‡↔	Prä	A06A A06B A06C
		A07A A07B A07C
		A43A A46A A46B
		A46C A46D A46E
		A90A A90B A93A
		A94A A94B A94C
		A95A A95B A97A
		A97B
	01	B01A B02A B03A
		B09A B20A B36B
		B60A B76A B76B
		B76C B87A B90A
	03	D02A D15A D15B
		D37A D37B D87Z
	04	E02A E33A E36A
		E36C E87A E87B
		E90A
	05	F37A F37B F73A
		F75A F86A F87Z
		F90A F90B F90C
	06	G09A G12A G21B
		G37Z G38A G38B
		G67A G87A
	07	H37A H87Z
	09	J33Z J87Z
	10	K37A K37B K87Z
	11	L37A L37B L87Z
	12	M38A
	13	N02A N33Z
	14	O38A
	16	Q37A Q37B
	17	R01A R50A R50B
		R50C R61A R61B
	18B	T01A T01C T60A
		T60B T60C T60F
	19	U66A
	20	V01Z
	21A	W01A W01B W01C
		W01D W60A W60B
		W61A
	21B	X37A X86A
	23	Z02Z
99.B8.1E‡↔	Prä	A06A A06B A06C
		A07A A07B A07C
		A43A A46A A46B
		A46C A46D A46E
		A90A A90B A93A
		A94A A94B A94C
		A95A A95B A97A
		A97B
	01	B01A B02A B03A
		B09A B20A B36B
		B60A B76A B76B
		B76C B87A B90A
	03	D02A D15A D15B
		D37A D37B D87Z
	04	E02A E33A E36A
		E36C E87A E87B
		E90A
	05	F37A F37B F73A
		F75A F86A F87Z
		F90A F90B F90C
	06	G09A G12A G21B
		G37Z G38A G38B
		G67A G87A
	07	H37A H87Z
	09	J33Z J87Z
	10	K37A K37B K87Z
	11	L37A L37B L87Z
	12	M38A
	13	N02A N33Z
	14	O38A
	16	Q37A Q37B
	17	R01A R50A R50B
		R50C R61A R61B
	18B	T01A T01C T60A
		T60B T60C T60F
	19	U66A
	20	V01Z
	21A	W01A W01B W01C
		W01D W60A W60B
		W61A
	21B	X37A X86A
	23	Z02Z
99.B8.1F‡↔	Prä	A06A A06B A06C
		A07A A07B A07C
		A43A A46A A46B
		A46C A46D A46E
		A90A A90B A93A
		A94A A94B A94C
		A95A A95B A97A
		A97B
	01	B01A B02A B03A
		B09A B20A B36B
		B60A B76A B76B
		B76C B87A B90A
	03	D02A D15A D15B
		D37A D37B D87Z
	04	E02A E33A E36A
		E36C E87A E87B
		E90A
	05	F37A F37B F73A
		F75A F86A F87Z
		F90A F90B F90C
	06	G09A G12A G21B
		G37Z G38A G38B
		G67A G87A
	07	H37A H87Z
	09	J33Z J87Z
	10	K37A K37B K87Z
	11	L37A L37B L87Z
	12	M38A
	13	N02A N33Z
	14	O38A
	16	Q37A Q37B
	17	R01A R50A R50B
		R50C R61A R61B
	18B	T01A T01C T60A
		T60B T60C T60F
	19	U66A
	20	V01Z
	21A	W01A W01B W01C
		W01D W60A W60B
		W61A
	21B	X37A X86A
	23	Z02Z
99.B8.1G‡↔	Prä	A06A A06B A06C
		A07A A07B A07C
		A43A A46A A46B
		A46C A46D A46E
		A90A A90B A93A
		A94A A94B A94C
		A95A A95B A97A
		A97B
	01	B01A B02A B03A
		B09A B20A B36B
		B60A B76A B76B
		B76C B87A B90A
	03	D02A D15A D15B
		D37A D37B D87Z
	04	E02A E33A E36A
		E36C E87A E87B
		E90A
	05	F37A F37B F73A
		F75A F86A F87Z
		F90A F90B F90C
	06	G09A G12A G21B
		G37Z G38A G38B
		G67A G87A
	07	H37A H87Z
	09	J33Z J87Z
	10	K37A K37B K87Z
	11	L37A L37B L87Z
	12	M38A
	13	N02A N33Z
	14	O38A
	16	Q37A Q37B
	17	R01A R50A R50B
		R50C R61A R61B
	18B	T01A T01C T60A
		T60B T60C T60F
	19	U66A
	20	V01Z
	21A	W01A W01B W01C
		W01D W60A W60B
		W61A
	21B	X37A X86A
	23	Z02Z
99.B8.1H‡↔	Prä	A06A A06B A06C
		A07A A07B A07C
		A43A A46A A46B
		A46C A46D A46E
		A90A A90B A93A
		A94A A94B A94C
		A95A A95B A97A
		A97B
	01	B01A B02A B03A
		B09A B20A B36B
		B60A B76A B76B
		B76C B87A B90A
	03	D02A D15A D15B
		D37A D37B D87Z
	04	E02A E33A E36A
		E36C E87A E87B
		E90A
	05	F37A F37B F73A
		F75A F86A F87Z
		F90A F90B F90C
	06	G09A G12A G21B
		G37Z G38A G38B
		G67A G87A
	07	H37A H87Z
	09	J33Z J87Z
	10	K37A K37B K87Z
	11	L37A L37B L87Z
	12	M38A
	13	N02A N33Z
	14	O38A

CHOP	MDC	DRG
	16	Q37A Q37B
	17	R01A R50A R50B
		R50C R61A R61B
	18B	T01A T01C T60A
		T60B T60C T60F
	19	U66A
	20	V01Z
	21A	W01A W01B W01C
		W01D W60A W60B
		W61A
	21B	X37A X86A
	23	Z02Z
99.B8.1I‡↔	Prä	A06A A06B A06C
		A07A A07B A07C
		A43A A46A A46B
		A46C A46D A46E
		A90A A90B A93A
		A94A A94B A94C
		A95A A95B A97A
		A97B
	01	B01A B02A B03A
		B09A B20A B36B
		B60A B76A B76B
		B76C B87A B90A
	03	D02A D15A D15B
		D37A D37B D87Z
	04	E02A E33A E36A
		E36C E87A E87B
		E90A
	05	F37A F37B F73A
		F75A F86A F87Z
		F90A F90B F90C
	06	G09A G12A G21B
		G37Z G38A G38B
		G67A G87A
	07	H37A H87Z
	09	J33Z J87Z
	10	K37A K37B K87Z
	11	L37A L37B L87Z
	12	M38A
	13	N02A N33Z
	14	O38A
	16	Q37A Q37B
	17	R01A R50A R50B
		R50C R61A R61B
	18B	T01A T01C T60A
		T60B T60C T60F
	19	U66A
	20	V01Z
	21A	W01A W01B W01C
		W01D W60A W60B
		W61A
	21B	X37A X86A
	23	Z02Z
99.B8.1J‡↔	Prä	A06A A06B A06C
		A07A A07B A07C
		A43A A46A A46B
		A46C A46D A46E
		A90A A90B A93A
		A94A A94B A94C
		A95A A95B A97A
		A97B
	01	B01A B02A B03A
		B09A B20A B36B
		B60A B76A B76B
		B76C B87A B90A
	03	D02A D15A D15B
		D37A D37B D87Z
	04	E02A E33A E36A
		E36C E87A E87B
		E90A
	05	F37A F37B F73A
		F75A F86A F87Z
		F90A F90B F90C
	06	G09A G12A G21B
		G37Z G38A G38B
		G67A G87A
	07	H37A H87Z
	09	J33Z J87Z
	10	K37A K37B K87Z
	11	L37A L37B L87Z
	12	M38A
	13	N02A N33Z
	14	O38A
	16	Q37A Q37B
	17	R01A R50A R50B
		R50C R61A R61B
	18B	T01A T01C T60A
		T60B T60C T60F
	19	U66A
	20	V01Z
	21A	W01A W01B W01C
		W01D W60A W60B
		W61A
	21B	X37A X86A
	23	Z02Z
99.B8.1K‡↔	Prä	A06A A06B A06C
		A07A A07B A07C
		A43A A46A A46B
		A46C A46D A46E
		A90A A90B A93A
		A94A A94B A94C
		A95A A95B A97A
		A97B
	01	B01A B02A B03A
		B09A B20A B36B
		B60A B76A B76B
		B76C B87A B90A
	03	D02A D15A D15B
		D37A D37B D87Z
	04	E02A E33A E36A
		E36C E87A E87B
		E90A
	05	F37A F37B F73A
		F75A F86A F87Z
		F90A F90B F90C
	06	G09A G12A G21B
		G37Z G38A G38B
		G67A G87A
	07	H37A H87Z
	09	J33Z J87Z
	10	K37A K37B K87Z
	11	L37A L37B L87Z
	12	M38A
	13	N02A N33Z
	14	O38A
	16	Q37A Q37B
	17	R01A R50A R50B
		R50C R61A R61B
	18B	T01A T01C T60A
		T60B T60C T60F
	19	U66A
	20	V01Z
	21A	W01A W01B W01C
		W01D W60A W60B
		W61A
	21B	X37A X86A
	23	Z02Z
99.B8.1L‡↔	Prä	A06A A06B A06C
		A07A A07B A07C
		A43A A46A A46B
		A46C A46D A46E
		A90A A90B A93A
		A94A A94B A94C
		A95A A95B A97A
		A97B
	01	B01A B02A B03A
		B09A B20A B36B
		B60A B76A B76B
		B76C B87A B90A
	03	D02A D15A D15B
		D37A D37B D87Z
	04	E02A E33A E36A
		E36C E87A E87B
		E90A
	05	F37A F37B F73A
		F75A F86A F87Z
		F90A F90B F90C
	06	G09A G12A G21B
		G37Z G38A G38B
		G67A G87A
	07	H37A H87Z
	09	J33Z J87Z
	10	K37A K37B K87Z
	11	L37A L37B L87Z
	12	M38A
	13	N02A N33Z
	14	O38A
	16	Q37A Q37B
	17	R01A R50A R50B
		R50C R61A R61B
	18B	T01A T01C T60A
		T60B T60C T60F
	19	U66A
	20	V01Z
	21A	W01A W01B W01C
		W01D W60A W60B
		W61A
	21B	X37A X86A
	23	Z02Z
99.B8.1M‡↔	Prä	A06A A06B A06C
		A07A A07B A07C
		A43A A46A A46B
		A46C A46D A46E
		A90A A90B A93A
		A94A A94B A94C
		A95A A95B A97A
		A97B
	01	B01A B02A B03A
		B09A B20A B36B
		B60A B76A B76B
		B76C B87A B90A
	03	D02A D15A D15B
		D37A D37B D87Z
	04	E02A E33A E36A
		E36C E87A E87B
		E90A
	05	F37A F37B F73A
		F75A F86A F87Z
		F90A F90B F90C
	06	G09A G12A G21B
		G37Z G38A G38B
		G67A G87A
	07	H37A H87Z
	09	J33Z J87Z
	10	K37A K37B K87Z
	11	L37A L37B L87Z
	12	M38A
	13	N02A N33Z
	14	O38A

PROC

CHOP	MDC	DRG
	16	Q37A Q37B
	17	R01A R50A R50B R50C R61A R61B
	18B	T01A T01C T60A T60B T60C T60F
	19	U66A
	20	V01Z
	21A	W01A W01B W01C W01D W60A W60B W61A
	21B	X37A X86A
	23	Z02Z
99.B8.1N‡↔	Prä	A06A A06B A06C A07A A07B A07C A43A A46A A46B A46C A46D A46E A90A A90B A93A A94A A94B A94C A95A A95B A97A A97B
	01	B01A B02A B03A B09A B20A B36B B60A B76A B76B B76C B87A B90A
	03	D02A D15A D15B D37A D37B D87Z
	04	E02A E33A E36A E36C E87A E87B E90A
	05	F37A F37B F73A F75A F86A F87Z F90A F90B F90C
	06	G09A G12A G21B G37Z G38A G38B G67A G87A
	07	H37A H87Z
	09	J33Z J87Z
	10	K37A K37B K87Z
	11	L37A L37B L87Z
	12	M38A
	13	N02A N33Z
	14	O38A
	16	Q37A Q37B
	17	R01A R50A R50B R50C R61A R61B
	18B	T01A T01C T60A T60B T60C T60F
	19	U66A
	20	V01Z
	21A	W01A W01B W01C W01D W60A W60B W61A
	21B	X37A X86A
	23	Z02Z
99.B8.1O‡↔	Prä	A06A A06B A06C A07A A07B A07C A43A A46A A46B A46C A46D A46E A90A A90B A93A A94A A94B A94C A95A A95B A97A A97B
	01	B01A B02A B03A B09A B20A B36B B60A B76A B76B B76C B87A B90A
	03	D02A D15A D15B D37A D37B D87Z
	04	E02A E33A E36A E36C E87A E87B E90A
	05	F37A F37B F73A F75A F86A F87Z F90A F90B F90C
	06	G09A G12A G21B G37Z G38A G38B G67A G87A
	07	H37A H87Z
	09	J33Z J87Z
	10	K37A K37B K87Z
	11	L37A L37B L87Z
	12	M38A
	13	N02A N33Z
	14	O38A
	16	Q37A Q37B
	17	R01A R50A R50B R50C R61A R61B
	18B	T01A T01C T60A T60B T60C T60F
	19	U66A
	20	V01Z
	21A	W01A W01B W01C W01D W60A W60B W61A
	21B	X37A X86A
	23	Z02Z
99.B8.42‡↔	01	B09B B60A B70H B80A B81A B81B B86A
	04	E87A E87B
	05	F73A
	06	G22A G86B
	10	K06A
	15	P60B P66B P66C P67A P67B
	20	V02A
	21B	X62A X86B
	23	Z86A
99.B8.43‡↔	Prä	A94A A94B A97A A97B B61A B61B B61C
	01	B01A B02A B09A B60A B76A B76B B76C B87A
	03	D87Z
	04	E87A E87B E90A E90B E90C
	05	F73A F86A
	06	G09A G12A G22A G86B G87A G87B
	07	H07A H07B H87Z
	08	I02A I02B I02C I09A I09B
	09	J87Z
	10	K06A K87Z
	11	L87Z
	12	M38A M38B
	13	N02A N33Z
	14	O38A O38B
	15	P60B P65B P66B P67A
	16	Q37A Q37B
	17	R01A
	18B	T60A T60B T60C T60F
	20	V02A
	21A	W60A W60B
	21B	X37A X86A
	23	Z86A
99.B8.44‡↔	Prä	A46A A46B A46C A46D A90A A90B A90C A94A A94B A94C A97A A97B B61A B61B B61C
	01	B01A B02A B09A B20A B36B B60A B76A B76B B76C B87A B90A B90B
	03	D02A D15A D15B D37A D37B D87Z
	04	E36C E87A E87B E90A E90B E90C
	05	F37A F37B F73A F86A F90A F90B F90C
	06	G09A G12A G22A G38A G38B G67A G86B G87A
	07	H07A H07B H37A H87Z
	08	I02A I02B I02C I06A I06B I08B I09A I09B I10A I13A I31A I43A I43B I46B I87A I95A I95B
	09	J33Z J87Z
	10	K37A K37B K87Z
	11	L37A L37B L87Z
	12	M38A
	13	N02A N33Z
	14	O38A
	15	P60B P61A P65B P66B P67A
	16	Q37A Q37B
	17	R01A R50A R50B R50C
	18B	T01A T36A T36B T60A T60B T60C T60F
	19	U66A
	20	V01Z
	21A	W60A W60B
	21B	X37A X86A
	23	Z02Z
99.B8.45‡↔	Prä	A46A A46B A46C A46D A90A A90B A90C A94A A94B A94C A97A A97B B61B B61C
	01	B01A B02A B09A B20A B36B B60A B76A B76B B76C B87A B90A B90B
	03	D02A D15A D15B D37A D37B D87Z
	04	E36A E36C E87A E87B E90A
	05	F37A F37B F73A F86A F90A F90B F90C
	06	G09A G12A G22A G38A G38B G67A G86B G87A
	07	H07A H07B H37A H87Z
	09	J87Z
	10	K37A K37B K87Z
	11	L37A L37B L87Z
	12	M38A

CHOP	MDC	DRG
	13	N02A N33Z
	14	O38A
	15	P05A P05B P05C P05D P60B P61A P65A P66A P66B P66C P67A
	16	Q37A Q37B
	17	R01A R50A R50B R50C
	18B	T01A T60A T60B T60C T60F
	19	U66A
	20	V01Z
	21A	W01A W01B W01C W01D W60A W60B W61A
	21B	X37A X86A
	23	Z02Z
99.B8.46‡↔	Prä	A46A A46B A46C A46D A90A A90B A90C A94A A94B A94C A97A A97B B61B B61C
	01	B01A B02A B09A B20A B36B B60A B76A B76B B76C B87A B90A B90B
	03	D02A D15A D15B D37A D37B D87Z
	04	E36A E36C E87A E87B E90A
	05	F37A F37B F73A F86A F90A F90B F90C
	06	G09A G12A G22A G38A G38B G67A G86B G87A
	07	H07A H07B H37A H87Z
	09	J87Z
	10	K37A K37B K87Z
	11	L37A L37B L87Z
	12	M38A
	13	N02A N33Z
	14	O38A
	15	P02A P03A P04A P04B P04C P05A P05B P05C P05D P60B P61A P66A P66B P66C P67A
	16	Q37A Q37B
	17	R01A R50A R50B R50C
	18B	T01A T60A T60B T60C T60F
	19	U66A
	20	V01Z
	21A	W01A W01B W01C W01D W60A W60B W61A
	21B	X37A X86A
	23	Z02Z
99.B8.47‡↔	Prä	A46A A46B A46C A46D A46E A90A A90B A90C A94A A94B A94C A97A A97B B61B B61C
	01	B01A B02A B09A B20A B36B B60A B76A B76B B76C B87A B90A B90B
	03	D02A D15A D15B D37A D37B D87Z
	04	E36A E36C E87A E87B E90A
	05	F37A F37B F73A F86A F90A F90B F90C
	06	G09A G12A G22A G38A G38B G67A G86B G87A
	07	H07A H07B H37A H87Z
	09	J87Z
	10	K37A K37B K87Z
	11	L37A L37B L87Z
	12	M38A
	13	N02A N33Z
	14	O38A
	15	P02A P03A P04A P04B P05A P05B P05C P05D P60B P61A P66A P66B P66C P67A
	16	Q37A Q37B
	17	R01A R50A R50B R50C
	18B	T01A T60A T60B T60C T60F
	19	U66A
	20	V01Z
	21A	W01A W01B W01C W01D W60A W60B W61A
	21B	X37A X86A
	23	Z02Z
99.B8.48‡↔	Prä	A46A A46B A46C A46D A46E A90A A90B A90C A94A A94B A94C A97A A97B B61B B61C
	01	B01A B02A B09A B20A B36B B60A B76A B76B B76C B87A B90A B90B
	03	D02A D15A D15B D37A D37B D87Z
	04	E36A E36C E87A E87B E90A
	05	F37A F37B F73A F86A F90A F90B F90C
	06	G09A G12A G22A G38A G38B G67A G86B G87A
	07	H07A H07B H37A H87Z
	09	J87Z
	10	K37A K37B K87Z
	11	L37A L37B L87Z
	12	M38A
	13	N02A N33Z
	14	O38A
	15	P02A P02B P03A P03B P04A P04B P05A P05B P05C P05D P60B P61A P66A P66B P66C P67A
	16	Q37A Q37B
	17	R01A R50A R50B R50C
	18B	T01A T60A T60B T60C T60F
	19	U66A
	20	V01Z
	21A	W01A W01B W01C W01D W60A W60B W61A
	21B	X37A X86A
	23	Z02Z
99.B8.4A‡↔	Prä	A46A A46B A46C A46D A46E A90A A90B A90C A94A A94B A94C A97A A97B B61B B61C
	01	B01A B02A B09A B20A B36B B60A B76A B76B B76C B87A B90A
	03	D02A D15A D15B D37A D37B D87Z
	04	E36A E36C E87A E87B E90A
	05	F37A F37B F73A F86A F90A F90B F90C
	06	G09A G12A G22A G38A G38B G67A G86B G87A
	07	H07A H07B H37A H87Z
	09	J87Z
	10	K37A K37B K87Z
	11	L37A L37B L87Z
	12	M38A
	13	N02A N33Z
	14	O38A
	15	P02A P02B P03A P03B P04A P04B P05A P05B P05C P05D P60B P61A P66A P66B P66C P67A
	16	Q37A Q37B
	17	R01A R50A R50B R50C
	18B	T01A T60A T60B T60C T60F
	19	U66A
	20	V01Z
	21A	W01A W01B W01C W01D W60A W60B W61A
	21B	X37A X86A
	23	Z02Z
99.B8.4B‡↔	Prä	A06A A06B A06C A07A A46A A46B A46C A46D A46E A90A A90B A90C A94A A94B A94C A97A A97B B61B B61C
	01	B01A B02A B09A B20A B36B B60A B76A B76B B76C B87A B90A
	03	D02A D15A D15B D37A D37B D87Z
	04	E36A E36C E87A

PROC

PROC

CHOP	MDC	DRG
		E87B E90A
	05	F37A F37B F73A
		F86A F90A F90B
		F90C
	06	G09A G12A G22A
		G38A G38B G67A
		G86B G87A
	07	H07A H07B H37A
		H87Z
	09	J87Z
	10	K37A K37B K87Z
	11	L37A L37B L87Z
	12	M38A
	13	N02A N33Z
	14	O38A
	15	P02A P02B P03A
		P03B P04A P04B
		P05A P05B P05C
		P05D P60B P61A
		P66A P67A
	16	Q37A Q37B
	17	R01A R50A R50B
		R50C
	18B	T01A T60A T60B
		T60C T60F
	19	U66A
	20	V01Z
	21A	W01A W01B W01C
		W01D W60A W60B
		W61A
	21B	X37A X86A
	23	Z02Z
99.B8.4C‡↔	Prä	A06A A06B A06C
		A07A A43A A46A
		A46B A46C A46D
		A46E A90A A90B
		A90C A94A A94B
		A94C A97A A97B
		B61B B61C
	01	B01A B02A B09A
		B20A B36B B60A
		B76A B76B B76C
		B87A B90A
	03	D02A D15A D15B
		D37A D37B D87Z
	04	E36A E36C E87A
		E87B E90A
	05	F37A F37B F73A
		F86A F90A F90B
		F90C
	06	G09A G12A G22A
		G38A G38B G67A
		G86B G87A
	07	H07A H07B H37A
		H87Z
	09	J87Z
	10	K37A K37B K87Z
	11	L37A L37B L87Z
	12	M38A
	13	N02A N33Z
	14	O38A
	15	P02A P03A P03B
		P04A P04B P05A
		P05B P05C P05D
		P60B P61A P66A
		P67A
	16	Q37A Q37B
	17	R01A R50A R50B
		R50C
	18B	T01A T60A T60B
		T60C T60F
	19	U66A
	20	V01Z
	21A	W01A W01B W01C
		W01D W60A W60B
		W61A
	21B	X37A X86A
	23	Z02Z
99.B8.4D‡↔	Prä	A06A A06B A06C
		A07A A43A A46A
		A46B A46C A46D
		A46E A90A A90B
		A90C A94A A94B
		A94C A97A A97B
		B61B B61C
	01	B01A B02A B09A
		B20A B36B B60A
		B76A B76B B76C
		B87A B90A
	03	D02A D15A D15B
		D37A D37B D87Z
	04	E36A E36C E87A
		E87B E90A
	05	F37A F37B F73A
		F86A F90A F90B
		F90C
	06	G09A G12A G22A
		G38A G38B G67A
		G86B G87A
	07	H07A H07B H37A
		H87Z
	09	J87Z
	10	K37A K37B K87Z
	11	L37A L37B L87Z
	12	M38A
	13	N02A N33Z
	14	O38A
	15	P02A P03A P03B
		P04A P04B P05A
		P05B P05C P05D
		P60B P61A P66A
		P67A
	16	Q37A Q37B
	17	R01A R50A R50B
		R50C
	18B	T01A T60A T60B
		T60C T60F
	19	U66A
	20	V01Z
	21A	W01A W01B W01C
		W01D W60A W60B
		W61A
	21B	X37A X86A
	23	Z02Z
99.B8.4E‡↔	Prä	A06A A06B A06C
		A07A A43A A46A
		A46B A46C A46D
		A46E A90A A90B
		A90C A94A A94B
		A94C A97A A97B
		B61B B61C
	01	B01A B02A B09A
		B20A B36B B60A
		B76A B76B B76C
		B87A B90A
	03	D02A D15A D15B
		D37A D37B D87Z
	04	E36A E36C E87A
		E87B E90A
	05	F37A F37B F73A
		F86A F90A F90B
		F90C
	06	G09A G12A G22A
		G38A G38B G67A
		G86B G87A
	07	H07A H07B H37A
		H87Z
	09	J87Z
	10	K37A K37B K87Z
	11	L37A L37B L87Z
	12	M38A
	13	N02A N33Z
	14	O38A
	15	P02A P03A P04A
		P04B P05A P05B
		P05C P05D P60B
		P61A P66A P67A
	16	Q37A Q37B
	17	R01A R50A R50B
		R50C
	18B	T01A T60A T60B
		T60C T60F
	19	U66A
	20	V01Z
	21A	W01A W01B W01C
		W01D W60A W60B
		W61A
	21B	X37A X86A
	23	Z02Z
99.B8.4F‡↔	Prä	A06A A06B A06C
		A07A A43A A46A
		A46B A46C A46D
		A46E A90A A90B
		A90C A94A A94B
		A94C A97A A97B
		B61B B61C
	01	B01A B02A B09A
		B20A B36B B60A
		B76A B76B B76C
		B87A B90A
	03	D02A D15A D15B
		D37A D37B D87Z
	04	E36A E36C E87A
		E87B E90A
	05	F37A F37B F73A
		F86A F90A F90B
		F90C
	06	G09A G12A G22A
		G38A G38B G67A
		G86B G87A
	07	H07A H07B H37A
		H87Z
	09	J87Z
	10	K37A K37B K87Z
	11	L37A L37B L87Z
	12	M38A
	13	N02A N33Z
	14	O38A
	15	P02A P03A P04A
		P04B P05A P05B
		P05C P05D P60B
		P61A P66A P67A
	16	Q37A Q37B
	17	R01A R50A R50B
		R50C
	18B	T01A T60A T60B
		T60C T60F
	19	U66A
	20	V01Z
	21A	W01A W01B W01C

CHOP	MDC	DRG
		W01D W60A W60B
		W61A
	21B	X37A X86A
	23	Z02Z
99.B8.4G‡↔	Prä	A06A A06B A06C
		A07A A43A A46A
		A46B A46C A46D
		A46E A90A A90B
		A90C A94A A94B
		A94C A97A A97B
		B61B B61C
	01	B01A B02A B09A
		B20A B36B B60A
		B76A B76B B76C
		B87A B90A
	03	D02A D15A D15B
		D37A D37B D87Z
	04	E36A E36C E87A
		E87B E90A
	05	F37A F37B F73A
		F86A F90A F90B
		F90C
	06	G09A G12A G22A
		G38A G38B G67A
		G86B G87A
	07	H07A H07B H37A
		H87Z
	09	J87Z
	10	K37A K37B K87Z
	11	L37A L37B L87Z
	12	M38A
	13	N02A N33Z
	14	O38A
	15	P02A P03A P04A
		P04B P05A P05B
		P05C P05D P60B
		P61A P66A P67A
	16	Q37A Q37B
	17	R01A R50A R50B
		R50C
	18B	T01A T60A T60B
		T60C T60F
	19	U66A
	20	V01Z
	21A	W01A W01B W01C
		W01D W60A W60B
		W61A
	21B	X37A X86A
	23	Z02Z
99.B8.4H‡↔	Prä	A06A A06B A06C
		A07A A07B A07C
		A43A A46A A46B
		A46C A46D A46E
		A90A A90B A90C
		A94A A94B A94C
		A97A A97B B61B
		B61C
	01	B01A B02A B09A
		B20A B36B B60A
		B76A B76B B76C
		B87A B90A
	03	D02A D15A D15B
		D37A D37B D87Z
	04	E36A E36C E87A
		E87B E90A
	05	F37A F37B F73A
		F86A F90A F90B
		F90C
	06	G09A G12A G22A
		G38A G38B G67A
		G86B G87A
	07	H07A H07B H37A
		H87Z
	09	J87Z
	10	K37A K37B K87Z
	11	L37A L37B L87Z
	12	M38A
	13	N02A N33Z
	14	O38A
	15	P02A P03A P04A
		P04B P05A P05B
		P05C P05D P60B
		P61A P66A P67A
	16	Q37A Q37B
	17	R01A R50A R50B
		R50C
	18B	T01A T60A T60B
		T60C T60F
	19	U66A
	20	V01Z
	21A	W01A W01B W01C
		W01D W60A W60B
		W61A
	21B	X37A X86A
	23	Z02Z
99.B8.4I‡↔	Prä	A06A A06B A06C
		A07A A07B A07C
		A43A A46A A46B
		A46C A46D A46E
		A90A A90B A90C
		A94A A94B A94C
		A97A A97B B61B
		B61C
	01	B01A B02A B09A
		B20A B36B B60A
		B76A B76B B76C
		B87A B90A
	03	D02A D15A D15B
		D37A D37B D87Z
	04	E36A E36C E87A
		E87B E90A
	05	F37A F37B F73A
		F86A F90A F90B
		F90C
	06	G09A G12A G22A
		G38A G38B G67A
		G86B G87A
	07	H07A H07B H37A
		H87Z
	09	J87Z
	10	K37A K37B K87Z
	11	L37A L37B L87Z
	12	M38A
	13	N02A N33Z
	14	O38A
	15	P02A P03A P04A
		P04B P05A P05B
		P05C P05D P60B
		P61A P66A P67A
	16	Q37A Q37B
	17	R01A R50A R50B
		R50C
	18B	T01A T60A T60B
		T60C T60F
	19	U66A
	20	V01Z
	21A	W01A W01B W01C
		W01D W60A W60B
		W61A
	21B	X37A X86A
	23	Z02Z
99.B8.4J‡↔	Prä	A06A A06B A06C
		A07A A07B A07C
		A43A A46A A46B
		A46C A46D A46E
		A90A A90B A90C
		A94A A94B A94C
		A97A A97B B61B
		B61C
	01	B01A B02A B09A
		B20A B36B B60A
		B76A B76B B76C
		B87A B90A
	03	D02A D15A D15B
		D37A D37B D87Z
	04	E36A E36C E87A
		E87B E90A
	05	F37A F37B F73A
		F86A F90A F90B
		F90C
	06	G09A G12A G22A
		G38A G38B G67A
		G86B G87A
	07	H07A H07B H37A
		H87Z
	09	J87Z
	10	K37A K37B K87Z
	11	L37A L37B L87Z
	12	M38A
	13	N02A N33Z
	14	O38A
	15	P02A P03A P04A
		P04B P05A P05B
		P05C P05D P60B
		P61A P61C P66A
		P67A
	16	Q37A Q37B
	17	R01A R50A R50B
		R50C
	18B	T01A T60A T60B
		T60C T60F
	19	U66A
	20	V01Z
	21A	W01A W01B W01C
		W01D W60A W60B
		W61A
	21B	X37A X86A
	23	Z02Z
99.B8.4K‡↔	Prä	A06A A06B A06C
		A07A A07B A07C
		A43A A46A A46B
		A46C A46D A46E
		A90A A90B A90C
		A94A A94B A94C
		A97A A97B B61B
		B61C
	01	B01A B02A B09A
		B20A B36B B60A
		B76A B76B B76C
		B87A B90A
	03	D02A D15A D15B
		D37A D37B D87Z
	04	E36A E36C E87A
		E87B E90A
	05	F37A F37B F73A
		F86A F90A F90B
		F90C
	06	G09A G12A G22A

PROC

CHOP	MDC	DRG
		G38A G38B G67A
		G86B G87A
	07	H07A H07B H37A
		H87Z
	09	J87Z
	10	K37A K37B K87Z
	11	L37A L37B L87Z
	12	M38A
	13	N02A N33Z
	14	O38A
	15	P02A P03A P04A
		P04B P05A P05B
		P05C P05D P37Z
		P60B P61A P61C
		P66A P67A
	16	Q37A Q37B
	17	R01A R50A R50B
		R50C
	18B	T01A T60A T60B
		T60C T60F
	19	U66A
	20	V01Z
	21A	W01A W01B W01C
		W01D W60A W60B
		W61A
	21B	X37A X86A
	23	Z02Z
99.B8.4L‡↔	Prä	A06A A06B A06C
		A07A A07B A07C
		A43A A46A A46B
		A46C A46D A46E
		A90A A90B A90C
		A94A A94B A94C
		A97A A97B B61B
		B61C
	01	B01A B02A B09A
		B20A B36B B60A
		B76A B76B B76C
		B87A B90A
	03	D02A D15A D15B
		D37A D37B D87Z
	04	E36A E36C E87A
		E87B E90A
	05	F37A F37B F73A
		F86A F90A F90B
		F90C
	06	G09A G12A G22A
		G38A G38B G67A
		G86B G87A
	07	H07A H07B H37A
		H87Z
	09	J87Z
	10	K37A K37B K87Z
	11	L37A L37B L87Z
	12	M38A
	13	N02A N33Z
	14	O38A
	15	P02A P03A P04A
		P04B P05A P05B
		P05C P05D P37Z
		P60B P61A P61C
		P66A P67A
	16	Q37A Q37B
	17	R01A R50A R50B
		R50C
	18B	T01A T60A T60B
		T60C T60F
	19	U66A
	20	V01Z
	21A	W01A W01B W01C
		W01D W60A W60B
		W61A
	21B	X37A X86A
	23	Z02Z
99.B8.4M‡↔	Prä	A06A A06B A06C
		A07A A07B A07C
		A43A A46A A46B
		A46C A46D A46E
		A90A A90B A90C
		A94A A94B A94C
		A97A A97B B61B
		B61C
	01	B01A B02A B09A
		B20A B36B B60A
		B76A B76B B76C
		B87A B90A
	03	D02A D15A D15B
		D37A D37B D87Z
	04	E36A E36C E87A
		E87B E90A
	05	F37A F37B F73A
		F86A F90A F90B
		F90C
	06	G09A G12A G22A
		G38A G38B G67A
		G86B G87A
	07	H07A H07B H37A
		H87Z
	09	J87Z
	10	K37A K37B K87Z
	11	L37A L37B L87Z
	12	M38A
	13	N02A N33Z
	14	O38A
	15	P02A P03A P04A
		P04B P05A P05B
		P05C P05D P37Z
		P60B P61A P61C
		P66A P67A
	16	Q37A Q37B
	17	R01A R50A R50B
		R50C
	18B	T01A T60A T60B
		T60C T60F
	19	U66A
	20	V01Z
	21A	W01A W01B W01C
		W01D W60A W60B
		W61A
	21B	X37A X86A
	23	Z02Z
99.B8.4N‡↔	Prä	A06A A06B A06C
		A07A A07B A07C
		A43A A46A A46B
		A46C A46D A46E
		A90A A90B A90C
		A94A A94B A94C
		A97A A97B B61B
		B61C
	01	B01A B02A B09A
		B20A B36B B60A
		B76A B76B B76C
		B87A B90A
	03	D02A D15A D15B
		D37A D37B D87Z
	04	E36A E36C E87A
		E87B E90A
	05	F37A F37B F73A
		F86A F90A F90B
		F90C
	06	G09A G12A G22A
		G38A G38B G67A
		G86B G87A
	07	H07A H07B H37A
		H87Z
	09	J87Z
	10	K37A K37B K87Z
	11	L37A L37B L87Z
	12	M38A
	13	N02A N33Z
	14	O38A
	15	P02A P03A P04A
		P04B P05A P05B
		P05C P05D P37Z
		P60B P61A P61C
		P66A P67A
	16	Q37A Q37B
	17	R01A R50A R50B
		R50C
	18B	T01A T60A T60B
		T60C T60F
	19	U66A
	20	V01Z
	21A	W01A W01B W01C
		W01D W60A W60B
		W61A
	21B	X37A X86A
	23	Z02Z
99.B8.4O‡↔	Prä	A06A A06B A06C
		A07A A07B A07C
		A43A A46A A46B
		A46C A46D A46E
		A90A A90B A90C
		A94A A94B A94C
		A97A A97B B61B
		B61C
	01	B01A B02A B09A
		B20A B36B B60A
		B76A B76B B76C
		B87A B90A
	03	D02A D15A D15B
		D37A D37B D87Z
	04	E36A E36C E87A
		E87B E90A
	05	F37A F37B F73A
		F86A F90A F90B
		F90C
	06	G09A G12A G22A
		G38A G38B G67A
		G86B G87A
	07	H07A H07B H37A
		H87Z
	09	J87Z
	10	K37A K37B K87Z
	11	L37A L37B L87Z
	12	M38A
	13	N02A N33Z
	14	O38A
	15	P02A P03A P04A
		P04B P05A P05B
		P05C P05D P37Z
		P60B P61A P61C
		P66A P67A
	16	Q37A Q37B
	17	R01A R50A R50B
		R50C
	18B	T01A T60A T60B
		T60C T60F
	19	U66A
	20	V01Z

CHOP	MDC	DRG
	21A	W01A W01B W01C W01D W60A W60B W61A
	21B	X37A X86A
	23	Z02Z
99.B8.4P‡↔	Prä	A06A A06B A06C A07A A07B A07C A43A A46A A46B A46C A46D A46E A90A A90B A90C A94A A94B A94C A97A A97B B61B B61C
	01	B01A B02A B09A B20A B36B B60A B76A B76B B76C B87A B90A
	03	D02A D15A D15B D37A D37B D87Z
	04	E36A E36C E87A E87B E90A
	05	F37A F37B F73A F86A F90A F90B F90C
	06	G09A G12A G22A G38A G38B G67A G86B G87A
	07	H07A H07B H37A H87Z
	09	J87Z
	10	K37A K37B K87Z
	11	L37A L37B L87Z
	12	M38A
	13	N02A N33Z
	14	O38A
	15	P02A P03A P04A P04B P05A P05B P05C P05D P37Z P60B P61A P61C P66A P67A
	16	Q37A Q37B
	17	R01A R50A R50B R50C
	18B	T01A T60A T60B T60C T60F
	19	U66A
	20	V01Z
	21A	W01A W01B W01C W01D W60A W60B W61A
	21B	X37A X86A
	23	Z02Z
99.B8.4Q‡↔	Prä	A06A A06B A06C A07A A07B A07C A43A A46A A46B A46C A46D A46E A90A A90B A90C A94A A94B A94C A97A A97B B61B B61C
	01	B01A B02A B09A B20A B36B B60A B76A B76B B76C B87A B90A
	03	D02A D15A D15B D37A D37B D87Z
	04	E36A E36C E87A E87B E90A
	05	F37A F37B F73A F86A F90A F90B F90C
	06	G09A G12A G22A G38A G38B G67A G86B G87A
	07	H07A H07B H37A H87Z
	09	J87Z
	10	K37A K37B K87Z
	11	L37A L37B L87Z
	12	M38A
	13	N02A N33Z
	14	O38A
	15	P02A P03A P04A P04B P05A P05B P05C P05D P37Z P60B P61A P61C P66A P67A
	16	Q37A Q37B
	17	R01A R50A R50B R50C
	18B	T01A T60A T60B T60C T60F
	19	U66A
	20	V01Z
	21A	W01A W01B W01C W01D W60A W60B W61A
	21B	X37A X86A
	23	Z02Z
99.B8.4R‡↔	Prä	A06A A06B A06C A07A A07B A07C A43A A46A A46B A46C A46D A46E A90A A90B A90C A94A A94B A94C A97A A97B B61B B61C
	01	B01A B02A B09A B20A B36B B60A B76A B76B B76C B87A B90A
	03	D02A D15A D15B D37A D37B D87Z
	04	E36A E36C E87A E87B E90A
	05	F37A F37B F73A F86A F90A F90B F90C
	06	G09A G12A G22A G38A G38B G67A G86B G87A
	07	H07A H07B H37A H87Z
	09	J87Z
	10	K37A K37B K87Z
	11	L37A L37B L87Z
	12	M38A
	13	N02A N33Z
	14	O38A
	15	P02A P03A P04A P04B P05A P05B P05C P05D P37Z P60B P61A P61C P66A P67A
	16	Q37A Q37B
	17	R01A R50A R50B R50C
	18B	T01A T60A T60B T60C T60F
	19	U66A
	20	V01Z
	21A	W01A W01B W01C W01D W60A W60B W61A
	21B	X37A X86A
	23	Z02Z
99.B8.4S‡↔	Prä	A06A A06B A06C A07A A07B A07C A43A A46A A46B A46C A46D A46E A90A A90B A90C A94A A94B A94C A97A A97B B61B B61C
	01	B01A B02A B09A B20A B36B B60A B76A B76B B76C B87A B90A
	03	D02A D15A D15B D37A D37B D87Z
	04	E36A E36C E87A E87B E90A
	05	F37A F37B F73A F86A F90A F90B F90C
	06	G09A G12A G22A G38A G38B G67A G86B G87A
	07	H07A H07B H37A H87Z
	09	J87Z
	10	K37A K37B K87Z
	11	L37A L37B L87Z
	12	M38A
	13	N02A N33Z
	14	O38A
	15	P02A P03A P04A P04B P05A P05B P05C P05D P37Z P60B P61A P61C P66A P67A
	16	Q37A Q37B
	17	R01A R50A R50B R50C
	18B	T01A T60A T60B T60C T60F
	19	U66A
	20	V01Z
	21A	W01A W01B W01C W01D W60A W60B W61A
	21B	X37A X86A
	23	Z02Z
99.B8.52‡↔	01	B09B B60A B70H B80A B81A B81B B86A
	04	E87A E87B
	05	F73A
	06	G22A G86B
	15	P60B P66B P66C P67A P67B
	21B	X62A X86B
99.B8.53‡↔	Prä	A94A A94B A97A A97B B61A B61B B61C
	01	B01A B02A B09A B60A B76A B76B B76C B87A
	03	D87Z
	04	E87A E87B E90A

PROC

PROC

CHOP	MDC	DRG
		E90B E90C
	05	F73A F86A
	06	G09A G12A G22A G86B G87A G87B
	07	H07A H07B H87Z
	08	I02A I02B I02C I09A I09B
	09	J87Z
	10	K87Z
	11	L87Z
	12	M38A M38B
	13	N02A N33Z
	14	O38A O38B
	15	P60B P65B P66B P67A
	16	Q37A Q37B
	17	R01A
	18B	T60A T60B T60C T60F
	21A	W60A W60B
	21B	X37A X86A
99.B8.54‡↔	Prä	A46A A46B A46C A46D A90A A90B A90C A94A A94B A94C A97A A97B B61A B61B B61C
	01	B01A B02A B09A B20A B36B B60A B76A B76B B76C B87A B90A B90B
	03	D02A D15A D15B D37A D37B D87Z
	04	E36C E87A E87B E90A E90B E90C
	05	F37A F37B F73A F86A F90A F90B F90C
	06	G09A G12A G22A G38A G38B G67A G86B G87A
	07	H07A H07B H37A H87Z
	08	I02A I02B I02C I06A I06B I08B I09A I09B I10A I13A I31A I43A I43B I46B I87A I95A I95B
	09	J33Z J87Z
	10	K37A K37B K87Z
	11	L37A L37B L87Z
	12	M38A
	13	N02A N33Z
	14	O38A
	15	P60B P61A P65B P66B P67A
	16	Q37A Q37B
	17	R01A R50A R50B R50C
	18B	T01A T36A T36B T60A T60B T60C T60F
	19	U66A
	20	V01Z
	21A	W60A W60B
	21B	X37A X86A
	23	Z02Z
99.B8.55‡↔	Prä	A46A A46B A46C A46D A90A A90B A90C A94A A94B A94C A97A A97B B61B B61C
	01	B01A B02A B09A B20A B36B B60A B76A B76B B76C B87A B90A B90B
	03	D02A D15A D15B D37A D37B D87Z
	04	E36A E36C E87A E87B E90A
	05	F37A F37B F73A F86A F90A F90B F90C
	06	G09A G12A G22A G38A G38B G67A G86B G87A
	07	H07A H07B H37A H87Z
	09	J87Z
	10	K37A K37B K87Z
	11	L37A L37B L87Z
	12	M38A
	13	N02A N33Z
	14	O38A
	15	P05A P05B P05C P05D P60B P61A P65A P66A P66B P66C P67A
	16	Q37A Q37B
	17	R01A R50A R50B R50C
	18B	T01A T60A T60B T60C T60F
	19	U66A
	20	V01Z
	21A	W01A W01B W01C W01D W60A W60B W61A
	21B	X37A X86A
	23	Z02Z
99.B8.56‡↔	Prä	A46A A46B A46C A46D A90A A90B A90C A94A A94B A94C A97A A97B B61B B61C
	01	B01A B02A B09A B20A B36B B60A B76A B76B B76C B87A B90A B90B
	03	D02A D15A D15B D37A D37B D87Z
	04	E36A E36C E87A E87B E90A
	05	F37A F37B F73A F86A F90A F90B F90C
	06	G09A G12A G22A G38A G38B G67A G86B G87A
	07	H07A H07B H37A H87Z
	09	J87Z
	10	K37A K37B K87Z
	11	L37A L37B L87Z
	12	M38A
	13	N02A N33Z
	14	O38A
	15	P02A P03A P04A P04B P04C P05A P05B P05C P05D P60B P61A P66A P66B P66C P67A
	16	Q37A Q37B
	17	R01A R50A R50B R50C
	18B	T01A T60A T60B T60C T60F
	19	U66A
	20	V01Z
	21A	W01A W01B W01C W01D W60A W60B W61A
	21B	X37A X86A
	23	Z02Z
99.B8.57‡↔	Prä	A46A A46B A46C A46D A46E A90A A90B A90C A94A A94B A94C A97A A97B B61B B61C
	01	B01A B02A B09A B20A B36B B60A B76A B76B B76C B87A B90A B90B
	03	D02A D15A D15B D37A D37B D87Z
	04	E36A E36C E87A E87B E90A
	05	F37A F37B F73A F86A F90A F90B F90C
	06	G09A G12A G22A G38A G38B G67A G86B G87A
	07	H07A H07B H37A H87Z
	09	J87Z
	10	K37A K37B K87Z
	11	L37A L37B L87Z
	12	M38A
	13	N02A N33Z
	14	O38A
	15	P02A P03A P04A P04B P05A P05B P05C P05D P60B P61A P66A P66B P66C P67A
	16	Q37A Q37B
	17	R01A R50A R50B R50C
	18B	T01A T60A T60B T60C T60F
	19	U66A
	20	V01Z
	21A	W01A W01B W01C W01D W60A W60B W61A
	21B	X37A X86A
	23	Z02Z
99.B8.58‡↔	Prä	A46A A46B A46C A46D A46E A90A A90B A90C A94A A94B A94C A97A A97B B61B B61C
	01	B01A B02A B09A B20A B36B B60A B76A B76B B76C B87A B90A B90B
	03	D02A D15A D15B D37A D37B D87Z
	04	E36A E36C E87A

CHOP	MDC	DRG
		E87B E90A
	05	F37A F37B F73A
		F86A F90A F90B
		F90C
	06	G09A G12A G22A
		G38A G38B G67A
		G86B G87A
	07	H07A H07B H37A
		H87Z
	09	J87Z
	10	K37A K37B K87Z
	11	L37A L37B L87Z
	12	M38A
	13	N02A N33Z
	14	O38A
	15	P02A P02B P03A
		P03B P04A P04B
		P05A P05B P05C
		P05D P60B P61A
		P66A P66B P66C
		P67A
	16	Q37A Q37B
	17	R01A R50A R50B
		R50C
	18B	T01A T60A T60B
		T60C T60F
	19	U66A
	20	V01Z
	21A	W01A W01B W01C
		W01D W60A W60B
		W61A
	21B	X37A X86A
	23	Z02Z
99.B8.5A‡↔	Prä	A46A A46B A46C
		A46D A46E A90A
		A90B A90C A94A
		A94B A94C A97A
		A97B B61B B61C
	01	B01A B02A B09A
		B20A B36B B60A
		B76A B76B B76C
		B87A B90A
	03	D02A D15A D15B
		D37A D37B D87Z
	04	E36A E36C E87A
		E87B E90A
	05	F37A F37B F73A
		F86A F90A F90B
		F90C
	06	G09A G12A G22A
		G38A G38B G67A
		G86B G87A
	07	H07A H07B H37A
		H87Z
	09	J87Z
	10	K37A K37B K87Z
	11	L37A L37B L87Z
	12	M38A
	13	N02A N33Z
	14	O38A
	15	P02A P02B P03A
		P03B P04A P04B
		P05A P05B P05C
		P05D P60B P61A
		P66A P66B P66C
		P67A
	16	Q37A Q37B
	17	R01A R50A R50B
		R50C
	18B	T01A T60A T60B
		T60C T60F
	19	U66A
	20	V01Z
	21A	W01A W01B W01C
		W01D W60A W60B
		W61A
	21B	X37A X86A
	23	Z02Z
99.B8.5B‡↔	Prä	A06A A06B A06C
		A07A A46A A46B
		A46C A46D A46E
		A90A A90B A90C
		A94A A94B A94C
		A97A A97B B61B
		B61C
	01	B01A B02A B09A
		B20A B36B B60A
		B76A B76B B76C
		B87A B90A
	03	D02A D15A D15B
		D37A D37B D87Z
	04	E36A E36C E87A
		E87B E90A
	05	F37A F37B F73A
		F86A F90A F90B
		F90C
	06	G09A G12A G22A
		G38A G38B G67A
		G86B G87A
	07	H07A H07B H37A
		H87Z
	09	J87Z
	10	K37A K37B K87Z
	11	L37A L37B L87Z
	12	M38A
	13	N02A N33Z
	14	O38A
	15	P02A P02B P03A
		P03B P04A P04B
		P05A P05B P05C
		P05D P60B P61A
		P66A P67A
	16	Q37A Q37B
	17	R01A R50A R50B
		R50C
	18B	T01A T60A T60B
		T60C T60F
	19	U66A
	20	V01Z
	21A	W01A W01B W01C
		W01D W60A W60B
		W61A
	21B	X37A X86A
	23	Z02Z
99.B8.5C‡↔	Prä	A06A A06B A06C
		A07A A43A A46A
		A46B A46C A46D
		A46E A90A A90B
		A90C A94A A94B
		A94C A97A A97B
		B61B B61C
	01	B01A B02A B09A
		B20A B36B B60A
		B76A B76B B76C
		B87A B90A
	03	D02A D15A D15B
		D37A D37B D87Z
	04	E36A E36C E87A
		E87B E90A
	05	F37A F37B F73A
		F86A F90A F90B
		F90C
	06	G09A G12A G22A
		G38A G38B G67A
		G86B G87A
	07	H07A H07B H37A
		H87Z
	09	J87Z
	10	K37A K37B K87Z
	11	L37A L37B L87Z
	12	M38A
	13	N02A N33Z
	14	O38A
	15	P02A P03A P03B
		P04A P04B P05A
		P05B P05C P05D
		P60B P61A P66A
		P67A
	16	Q37A Q37B
	17	R01A R50A R50B
		R50C
	18B	T01A T60A T60B
		T60C T60F
	19	U66A
	20	V01Z
	21A	W01A W01B W01C
		W01D W60A W60B
		W61A
	21B	X37A X86A
	23	Z02Z
99.B8.5D‡↔	Prä	A06A A06B A06C
		A07A A43A A46A
		A46B A46C A46D
		A46E A90A A90B
		A90C A94A A94B
		A94C A97A A97B
		B61B B61C
	01	B01A B02A B09A
		B20A B36B B60A
		B76A B76B B76C
		B87A B90A
	03	D02A D15A D15B
		D37A D37B D87Z
	04	E36A E36C E87A
		E87B E90A
	05	F37A F37B F73A
		F86A F90A F90B
		F90C
	06	G09A G12A G22A
		G38A G38B G67A
		G86B G87A
	07	H07A H07B H37A
		H87Z
	09	J87Z
	10	K37A K37B K87Z
	11	L37A L37B L87Z
	12	M38A
	13	N02A N33Z
	14	O38A
	15	P02A P03A P03B
		P04A P04B P05A
		P05B P05C P05D
		P60B P61A P66A
		P67A
	16	Q37A Q37B
	17	R01A R50A R50B
		R50C
	18B	T01A T60A T60B
		T60C T60F
	19	U66A

PROC

CHOP	MDC	DRG
	20	V01Z
	21A	W01A W01B W01C W01D W60A W60B W61A
	21B	X37A X86A
	23	Z02Z
99.B8.5E‡↔	Prä	A06A A06B A06C A07A A43A A46A A46B A46C A46D A46E A90A A90B A90C A94A A94B A94C A97A A97B B61B B61C
	01	B01A B02A B09A B20A B36B B60A B76A B76B B76C B87A B90A
	03	D02A D15A D15B D37A D37B D87Z
	04	E36A E36C E87A E87B E90A
	05	F37A F37B F73A F86A F90A F90B F90C
	06	G09A G12A G22A G38A G38B G67A G86B G87A
	07	H07A H07B H37A H87Z
	09	J87Z
	10	K37A K37B K87Z
	11	L37A L37B L87Z
	12	M38A
	13	N02A N33Z
	14	O38A
	15	P02A P03A P04A P04B P05A P05B P05C P05D P60B P61A P66A P67A
	16	Q37A Q37B
	17	R01A R50A R50B R50C
	18B	T01A T60A T60B T60C T60F
	19	U66A
	20	V01Z
	21A	W01A W01B W01C W01D W60A W60B W61A
	21B	X37A X86A
	23	Z02Z
99.B8.5F‡↔	Prä	A06A A06B A06C A07A A43A A46A A46B A46C A46D A46E A90A A90B A90C A94A A94B A94C A97A A97B B61B B61C
	01	B01A B02A B09A B20A B36B B60A B76A B76B B76C B87A B90A
	03	D02A D15A D15B D37A D37B D87Z
	04	E36A E36C E87A E87B E90A
	05	F37A F37B F73A F86A F90A F90B F90C
	06	G09A G12A G22A G38A G38B G67A G86B G87A
	07	H07A H07B H37A H87Z
	09	J87Z
	10	K37A K37B K87Z
	11	L37A L37B L87Z
	12	M38A
	13	N02A N33Z
	14	O38A
	15	P02A P03A P04A P04B P05A P05B P05C P05D P60B P61A P66A P67A
	16	Q37A Q37B
	17	R01A R50A R50B R50C
	18B	T01A T60A T60B T60C T60F
	19	U66A
	20	V01Z
	21A	W01A W01B W01C W01D W60A W60B W61A
	21B	X37A X86A
	23	Z02Z
99.B8.5G‡↔	Prä	A06A A06B A06C A07A A43A A46A A46B A46C A46D A46E A90A A90B A90C A94A A94B A94C A97A A97B B61B B61C
	01	B01A B02A B09A B20A B36B B60A B76A B76B B76C B87A B90A
	03	D02A D15A D15B D37A D37B D87Z
	04	E36A E36C E87A E87B E90A
	05	F37A F37B F73A F86A F90A F90B F90C
	06	G09A G12A G22A G38A G38B G67A G86B G87A
	07	H07A H07B H37A H87Z
	09	J87Z
	10	K37A K37B K87Z
	11	L37A L37B L87Z
	12	M38A
	13	N02A N33Z
	14	O38A
	15	P02A P03A P04A P04B P05A P05B P05C P05D P60B P61A P66A P67A
	16	Q37A Q37B
	17	R01A R50A R50B R50C
	18B	T01A T60A T60B T60C T60F
	19	U66A
	20	V01Z
	21A	W01A W01B W01C W01D W60A W60B W61A
	21B	X37A X86A
	23	Z02Z
99.B8.5H‡↔	Prä	A06A A06B A06C A07A A07B A07C A43A A46A A46B A46C A46D A46E A90A A90B A90C A94A A94B A94C A97A A97B B61B B61C
	01	B01A B02A B09A B20A B36B B60A B76A B76B B76C B87A B90A
	03	D02A D15A D15B D37A D37B D87Z
	04	E36A E36C E87A E87B E90A
	05	F37A F37B F73A F86A F90A F90B F90C
	06	G09A G12A G22A G38A G38B G67A G86B G87A
	07	H07A H07B H37A H87Z
	09	J87Z
	10	K37A K37B K87Z
	11	L37A L37B L87Z
	12	M38A
	13	N02A N33Z
	14	O38A
	15	P02A P03A P04A P04B P05A P05B P05C P05D P60B P61A P61C P66A P67A
	16	Q37A Q37B
	17	R01A R50A R50B R50C
	18B	T01A T60A T60B T60C T60F
	19	U66A
	20	V01Z
	21A	W01A W01B W01C W01D W60A W60B W61A
	21B	X37A X86A
	23	Z02Z
99.B8.5I‡↔	Prä	A06A A06B A06C A07A A07B A07C A43A A46A A46B A46C A46D A46E A90A A90B A90C A94A A94B A94C A97A A97B B61B B61C
	01	B01A B02A B09A B20A B36B B60A B76A B76B B76C B87A B90A
	03	D02A D15A D15B D37A D37B D87Z
	04	E36A E36C E87A E87B E90A
	05	F37A F37B F73A F86A F90A F90B F90C
	06	G09A G12A G22A G38A G38B G67A G86B G87A

CHOP	MDC	DRG
	07	H07A H07B H37A H87Z
	09	J87Z
	10	K37A K37B K87Z
	11	L37A L37B L87Z
	12	M38A
	13	N02A N33Z
	14	O38A
	15	P02A P03A P04A P04B P05A P05B P05C P05D P60B P61A P61C P66A P67A
	16	Q37A Q37B
	17	R01A R50A R50B R50C
	18B	T01A T60A T60B T60C T60F
	19	U66A
	20	V01Z
	21A	W01A W01B W01C W01D W60A W60B W61A
	21B	X37A X86A
	23	Z02Z
99.B8.5J‡↔	Prä	A06A A06B A06C A07A A07B A07C A43A A46A A46B A46C A46D A46E A90A A90B A90C A94A A94B A94C A97A A97B B61B B61C
	01	B01A B02A B09A B20A B36B B60A B76A B76B B76C B87A B90A
	03	D02A D15A D15B D37A D37B D87Z
	04	E36A E36C E87A E87B E90A
	05	F37A F37B F73A F86A F90A F90B F90C
	06	G09A G12A G22A G38A G38B G67A G86B G87A
	07	H07A H07B H37A H87Z
	09	J87Z
	10	K37A K37B K87Z
	11	L37A L37B L87Z
	12	M38A
	13	N02A N33Z
	14	O38A
	15	P02A P03A P04A P04B P05A P05B P05C P05D P60B P61A P61C P66A P67A
	16	Q37A Q37B
	17	R01A R50A R50B R50C
	18B	T01A T60A T60B T60C T60F
	19	U66A
	20	V01Z
	21A	W01A W01B W01C W01D W60A W60B W61A
	21B	X37A X86A
	23	Z02Z
99.B8.5K‡↔	Prä	A06A A06B A06C A07A A07B A07C A43A A46A A46B A46C A46D A46E A90A A90B A90C A94A A94B A94C A97A A97B B61B B61C
	01	B01A B02A B09A B20A B36B B60A B76A B76B B76C B87A B90A
	03	D02A D15A D15B D37A D37B D87Z
	04	E36A E36C E87A E87B E90A
	05	F37A F37B F73A F86A F90A F90B F90C
	06	G09A G12A G22A G38A G38B G67A G86B G87A
	07	H07A H07B H37A H87Z
	09	J87Z
	10	K37A K37B K87Z
	11	L37A L37B L87Z
	12	M38A
	13	N02A N33Z
	14	O38A
	15	P02A P03A P04A P04B P05A P05B P05C P05D P60B P61A P61C P66A P67A
	16	Q37A Q37B
	17	R01A R50A R50B R50C
	18B	T01A T60A T60B T60C T60F
	19	U66A
	20	V01Z
	21A	W01A W01B W01C W01D W60A W60B W61A
	21B	X37A X86A
	23	Z02Z
99.B8.5L‡↔	Prä	A06A A06B A06C A07A A07B A07C A43A A46A A46B A46C A46D A46E A90A A90B A90C A94A A94B A94C A97A A97B B61B B61C
	01	B01A B02A B09A B20A B36B B60A B76A B76B B76C B87A B90A
	03	D02A D15A D15B D37A D37B D87Z
	04	E36A E36C E87A E87B E90A
	05	F37A F37B F73A F86A F90A F90B F90C
	06	G09A G12A G22A G38A G38B G67A G86B G87A
	07	H07A H07B H37A H87Z
	09	J87Z
	10	K37A K37B K87Z
	11	L37A L37B L87Z
	12	M38A
	13	N02A N33Z
	14	O38A
	15	P02A P03A P04A P04B P05A P05B P05C P05D P37Z P60B P61A P61C P66A P67A
	16	Q37A Q37B
	17	R01A R50A R50B R50C
	18B	T01A T60A T60B T60C T60F
	19	U66A
	20	V01Z
	21A	W01A W01B W01C W01D W60A W60B W61A
	21B	X37A X86A
	23	Z02Z
99.B8.5M‡↔	Prä	A06A A06B A06C A07A A07B A07C A43A A46A A46B A46C A46D A46E A90A A90B A90C A94A A94B A94C A97A A97B B61B B61C
	01	B01A B02A B09A B20A B36B B60A B76A B76B B76C B87A B90A
	03	D02A D15A D15B D37A D37B D87Z
	04	E36A E36C E87A E87B E90A
	05	F37A F37B F73A F86A F90A F90B F90C
	06	G09A G12A G22A G38A G38B G67A G86B G87A
	07	H07A H07B H37A H87Z
	09	J87Z
	10	K37A K37B K87Z
	11	L37A L37B L87Z
	12	M38A
	13	N02A N33Z
	14	O38A
	15	P02A P03A P04A P04B P05A P05B P05C P05D P37Z P60B P61A P61C P66A P67A
	16	Q37A Q37B
	17	R01A R50A R50B R50C
	18B	T01A T60A T60B T60C T60F
	19	U66A
	20	V01Z
	21A	W01A W01B W01C W01D W60A W60B

PROC

PROC

CHOP	MDC	DRG
		W61A
	21B	X37A X86A
	23	Z02Z
99.B8.5N‡↔	Prä	A06A A06B A06C
		A07A A07B A07C
		A43A A46A A46B
		A46C A46D A46E
		A90A A90B A90C
		A94A A94B A94C
		A97A A97B B61B
		B61C
	01	B01A B02A B09A
		B20A B36B B60A
		B76A B76B B76C
		B87A B90A
	03	D02A D15A D15B
		D37A D37B D87Z
	04	E36A E36C E87A
		E87B E90A
	05	F37A F37B F73A
		F86A F90A F90B
		F90C
	06	G09A G12A G22A
		G38A G38B G67A
		G86B G87A
	07	H07A H07B H37A
		H87Z
	09	J87Z
	10	K37A K37B K87Z
	11	L37A L37B L87Z
	12	M38A
	13	N02A N33Z
	14	O38A
	15	P02A P03A P04A
		P04B P05A P05B
		P05C P05D P37Z
		P60B P61A P61C
		P66A P67A
	16	Q37A Q37B
	17	R01A R50A R50B
		R50C
	18B	T01A T60A T60B
		T60C T60F
	19	U66A
	20	V01Z
	21A	W01A W01B W01C
		W01D W60A W60B
		W61A
	21B	X37A X86A
	23	Z02Z
99.B8.5O‡↔	Prä	A06A A06B A06C
		A07A A07B A07C
		A43A A46A A46B
		A46C A46D A46E
		A90A A90B A90C
		A94A A94B A94C
		A97A A97B B61B
		B61C
	01	B01A B02A B09A
		B20A B36B B60A
		B76A B76B B76C
		B87A B90A
	03	D02A D15A D15B
		D37A D37B D87Z
	04	E36A E36C E87A
		E87B E90A
	05	F37A F37B F73A
		F86A F90A F90B
		F90C
	06	G09A G12A G22A
		G38A G38B G67A
		G86B G87A
	07	H07A H07B H37A
		H87Z
	09	J87Z
	10	K37A K37B K87Z
	11	L37A L37B L87Z
	12	M38A
	13	N02A N33Z
	14	O38A
	15	P02A P03A P04A
		P04B P05A P05B
		P05C P05D P37Z
		P60B P61A P61C
		P66A P67A
	16	Q37A Q37B
	17	R01A R50A R50B
		R50C
	18B	T01A T60A T60B
		T60C T60F
	19	U66A
	20	V01Z
	21A	W01A W01B W01C
		W01D W60A W60B
		W61A
	21B	X37A X86A
	23	Z02Z
99.B8.5P‡↔	Prä	A06A A06B A06C
		A07A A07B A07C
		A43A A46A A46B
		A46C A46D A46E
		A90A A90B A90C
		A94A A94B A94C
		A97A A97B B61B
		B61C
	01	B01A B02A B09A
		B20A B36B B60A
		B76A B76B B76C
		B87A B90A
	03	D02A D15A D15B
		D37A D37B D87Z
	04	E36A E36C E87A
		E87B E90A
	05	F37A F37B F73A
		F86A F90A F90B
		F90C
	06	G09A G12A G22A
		G38A G38B G67A
		G86B G87A
	07	H07A H07B H37A
		H87Z
	09	J87Z
	10	K37A K37B K87Z
	11	L37A L37B L87Z
	12	M38A
	13	N02A N33Z
	14	O38A
	15	P02A P03A P04A
		P04B P05A P05B
		P05C P05D P37Z
		P60B P61A P61C
		P66A P67A
	16	Q37A Q37B
	17	R01A R50A R50B
		R50C
	18B	T01A T60A T60B
		T60C T60F
	19	U66A
	20	V01Z
	21A	W01A W01B W01C
		W01D W60A W60B
		W61A
	21B	X37A X86A
	23	Z02Z
99.B8.5Q‡↔	Prä	A06A A06B A06C
		A07A A07B A07C
		A43A A46A A46B
		A46C A46D A46E
		A90A A90B A90C
		A94A A94B A94C
		A97A A97B B61B
		B61C
	01	B01A B02A B09A
		B20A B36B B60A
		B76A B76B B76C
		B87A B90A
	03	D02A D15A D15B
		D37A D37B D87Z
	04	E36A E36C E87A
		E87B E90A
	05	F37A F37B F73A
		F86A F90A F90B
		F90C
	06	G09A G12A G22A
		G38A G38B G67A
		G86B G87A
	07	H07A H07B H37A
		H87Z
	09	J87Z
	10	K37A K37B K87Z
	11	L37A L37B L87Z
	12	M38A
	13	N02A N33Z
	14	O38A
	15	P02A P03A P04A
		P04B P05A P05B
		P05C P05D P37Z
		P60B P61A P61C
		P66A P67A
	16	Q37A Q37B
	17	R01A R50A R50B
		R50C
	18B	T01A T60A T60B
		T60C T60F
	19	U66A
	20	V01Z
	21A	W01A W01B W01C
		W01D W60A W60B
		W61A
	21B	X37A X86A
	23	Z02Z
99.B8.5R‡↔	Prä	A06A A06B A06C
		A07A A07B A07C
		A43A A46A A46B
		A46C A46D A46E
		A90A A90B A90C
		A94A A94B A94C
		A97A A97B B61B
		B61C
	01	B01A B02A B09A
		B20A B36B B60A
		B76A B76B B76C
		B87A B90A
	03	D02A D15A D15B
		D37A D37B D87Z
	04	E36A E36C E87A
		E87B E90A
	05	F37A F37B F73A
		F86A F90A F90B
		F90C

CHOP	MDC	DRG
	06	G09A G12A G22A G38A G38B G67A G86B G87A
	07	H07A H07B H37A H87Z
	09	J87Z
	10	K37A K37B K87Z
	11	L37A L37B L87Z
	12	M38A
	13	N02A N33Z
	14	O38A
	15	P02A P03A P04A P04B P05A P05B P05C P05D P37Z P60B P61A P61C P66A P67A
	16	Q37A Q37B
	17	R01A R50A R50B R50C
	18B	T01A T60A T60B T60C T60F
	19	U66A
	20	V01Z
	21A	W01A W01B W01C W01D W60A W60B W61A
	21B	X37A X86A
	23	Z02Z
99.B8.5S‡↔	Prä	A06A A06B A06C A07A A07B A07C A43A A46A A46B A46C A46D A46E A90A A90B A90C A94A A94B A94C A97A A97B B61B B61C
	01	B01A B02A B09A B20A B36B B60A B76A B76B B76C B87A B90A
	03	D02A D15A D15B D37A D37B D87Z
	04	E36A E36C E87A E87B E90A
	05	F37A F37B F73A F86A F90A F90B F90C
	06	G09A G12A G22A G38A G38B G67A G86B G87A
	07	H07A H07B H37A H87Z
	09	J87Z
	10	K37A K37B K87Z
	11	L37A L37B L87Z
	12	M38A
	13	N02A N33Z
	14	O38A
	15	P02A P03A P03B P04A P04B P05A P05B P05C P05D P37Z P60B P61A P61C P66A P67A
	16	Q37A Q37B
	17	R01A R50A R50B R50C
	18B	T01A T60A T60B T60C T60F
	19	U66A
	20	V01Z
	21A	W01A W01B W01C W01D W60A W60B W61A
	21B	X37A X86A
	23	Z02Z
99.BA.13‡↔	Prä	A94C A95C A95D A97C
	01	B39A B39B B60A B69A B69B B70A B70B B70C B70F B70H B87A
	02	C61A
	04	E63A
99.BA.14‡↔	Prä	A94C A95C A95D A97C
	01	B39A B39B B60A B69A B69B B70A B70B B70C B70F B87A
	02	C61A
	04	E63A
99.BA.16‡↔	Prä	A94C A95C A95D A97C
	01	B39A B39B B60A B69A B70A B70B B70F B87A
	02	C61A
	04	E63A
99.BA.17‡↔	Prä	A94C A95C A95D A97C
	01	B39A B39B B60A B69A B70A B70B B70F B87A
	02	C61A
	04	E63A
99.BA.23‡↔	Prä	A94C A95C A95D A97C
	01	B39A B39B B60A B69A B69B B70B B70C B70F B70H B87A
	02	C61A
	04	E63A
99.BA.24‡↔	Prä	A94C A95C A95D A97C
	01	B39A B39B B60A B69A B69B B70B B70C B70F B87A
	02	C61A
	04	E63A
99.BA.26‡↔	Prä	A94C A95C A95D A97C
	01	B39A B39B B60A B69A B69B B70B B70F B87A
	02	C61A
	04	E63A
99.BA.27‡↔	Prä	A94C A95C A95D A97C
	01	B39A B39B B60A B69A B69B B70B B70F B87A
	02	C61A
	04	E63A
99.BA.31‡↔	Prä	A94C A95C A95D A97C
	01	B39A B39B B60A B69A B69B B70B B70C B70F B70H B87A
	02	C61A
	04	E63A
99.BA.32‡↔	Prä	A94C A95C A95D A97C
	01	B39A B39B B60A B69A B69B B70B B70F B87A
	02	C61A
	04	E63A
99.BC.12‡↔	Prä	A96A A96B
	01	B60A
99.BC.13‡↔	Prä	A96A
	01	B60A
99.BC.14‡↔	Prä	A96A
	01	B60A
99.BD.1E‡↔	01	B60A
	19	U66A
99.BD.1F‡↔	01	B60A
	19	U66A
99.BD.1G‡↔	01	B60A
	19	U66A
99.BD.1H‡↔	01	B60A
	19	U66A
99.BD.1I‡↔	01	B60A
	19	U66A
99.BD.1K‡↔	01	B60A
	19	U66A
99.BD.1L‡↔	01	B60A
	19	U66A
99.BD.1M‡↔	01	B60A
	19	U66A
99.BD.1N‡↔	01	B60A
	19	U66A
99.BD.1O‡↔	01	B60A
	19	U66A
99.BD.1P‡↔	01	B60A
	19	U66A
99.C2.18‡↔	01	B09A B60A
99.C2.1A‡↔	01	B09A B60A
99.C2.1B‡↔	01	B09A B60A
99.C2.1C‡↔	Prä	A46C A46D A46E
	01	B09A B60A
99.C2.1D‡↔	Prä	A46B A46C A46D A46E B61B B61C B61D
	01	B09A B60A
99.C2.1E‡↔	Prä	A46B A46C A46D A46E B61B B61C B61D
	01	B09A B60A
99.C2.1F‡↔	Prä	A46B A46C A46D A46E B61B B61C B61D
	01	B09A B60A
99.C2.1G‡↔	Prä	A46B A46C A46D A46E B61B B61C B61D
	01	B09A B60A
99.C2.1H‡↔	Prä	A46B A46C A46D A46E B61B B61C B61D
	01	B09A B60A
99.C2.1I‡↔	Prä	A46B A46C A46D A46E B61B B61C B61D
	01	B09A B60A
99.C2.1J‡↔	Prä	A46B A46C A46D A46E B61B B61C B61D
	01	B09A B60A

PROC

PROC

CHOP	MDC	DRG
99.C2.1K‡↔	Prä	A46B A46C A46D B61B B61C B61D
	01	B09A B60A
99.C2.1L‡↔	Prä	A46B A46C A46D B61B B61C B61D
	01	B09A B60A
99.C2.1M‡↔	Prä	A46B A46C A46D B61B B61C B61D
	01	B09A B60A
99.C2.1N‡↔	Prä	A46B A46C A46D B61B B61C B61D
	01	B09A B60A
99.C2.1O‡↔	Prä	A46B A46C A46D B61B B61C B61D
	01	B09A B60A
99.C2.1P‡↔	Prä	A46A A46B A46C B61B B61C B61D
	01	B09A B60A
99.C2.1Q‡↔	Prä	A46A A46B A46C B61B B61C B61D
	01	B09A B60A
99.C2.1R‡↔	Prä	A46A A46B A46C B61B B61C B61D
	01	B09A B60A
99.C2.1S‡↔	Prä	A46A A46B A46C B61B B61C B61D
	01	B09A B60A
99.C2.1T‡↔	Prä	A46A A46B A46C B61B B61C B61D
	01	B09A B60A
99.C2.1U‡↔	Prä	A46A A46B A46C B61B B61C B61D
	01	B09A B60A
99.C2.1V‡↔	Prä	A46A A46B A46C B61B B61C B61D
	01	B09A B60A
99.C2.1W‡↔	Prä	A46A A46B A46C B61B B61C B61D
	01	B09A B60A
99.C2.1Y‡↔	Prä	A46A A46B A46C B61B B61C B61D
	01	B09A B60A
99.C2.21‡↔	Prä	A46A A46B A46C B61B B61C B61D
	01	B09A B60A
99.C2.22‡↔	Prä	A46A A46B A46C B61B B61C B61D
	01	B09A B60A
99.C2.23‡↔	Prä	A46A A46B A46C B61B B61C B61D
	01	B09A B60A
99.C2.24‡↔	Prä	A46A A46B A46C B61B B61C B61D
	01	B09A B60A
99.C2.25‡↔	Prä	A46A A46B A46C B61B B61C B61D
	01	B09A B60A
99.C2.26‡↔	Prä	A46A A46B A46C B61B B61C B61D
	01	B09A B60A
99.C2.27‡↔	Prä	A46A A46B A46C B61B B61C B61D
	01	B09A B60A
99.C2.28‡↔	Prä	A46A A46B A46C B61B B61C B61D
	01	B09A B60A
99.C2.2A‡↔	Prä	A46A A46B A46C B61B B61C B61D
	01	B09A B60A
99.C2.2B‡↔	Prä	A46A A46B A46C B61B B61C B61D
	01	B09A B60A
99.C2.2C‡↔	Prä	A46A A46B A46C B61B B61C B61D
	01	B09A B60A
99.C2.2D‡↔	Prä	A46A A46B A46C B61B B61C B61D
	01	B09A B60A
99.C2.2E‡↔	Prä	A46A A46B A46C B61B B61C B61D
	01	B09A B60A
99.C2.2F‡↔	Prä	A46A A46B A46C B61B B61C B61D
	01	B09A B60A
99.C2.2G‡↔	Prä	A46A A46B A46C B61B B61C B61D
	01	B09A B60A
99.C2.2H‡↔	Prä	A46A A46B A46C B61B B61C B61D
	01	B09A B60A
99.C2.2I‡↔	Prä	A46A A46B A46C B61B B61C B61D
	01	B09A B60A
99.C2.2J‡↔	Prä	A46A A46B A46C B61B B61C B61D
	01	B09A B60A
99.C2.2K‡↔	Prä	A46A A46B A46C B61B B61C B61D
	01	B09A B60A
99.C3.18‡↔	01	B09A B60A
99.C3.1A‡↔	01	B09A B60A
99.C3.1B‡↔	01	B09A B60A
99.C3.1C‡↔	Prä	A46C A46D A46E
	01	B09A B60A
99.C3.1D‡↔	Prä	A46B A46C A46D A46E B61B B61C B61D
	01	B09A B60A
99.C3.1E‡↔	Prä	A46B A46C A46D A46E B61B B61C B61D
	01	B09A B60A
99.C3.1F‡↔	Prä	A46B A46C A46D A46E B61B B61C B61D
	01	B09A B60A
99.C3.1G‡↔	Prä	A46B A46C A46D A46E B61B B61C B61D
	01	B09A B60A
99.C3.1H‡↔	Prä	A46B A46C A46D A46E B61B B61C B61D
	01	B09A B60A
99.C3.1I‡↔	Prä	A46B A46C A46D A46E B61B B61C B61D
	01	B09A B60A
99.C3.1J‡↔	Prä	A46B A46C A46D A46E B61B B61C B61D
	01	B09A B60A
99.C3.1K‡↔	Prä	A46B A46C A46D B61B B61C B61D
	01	B09A B60A
99.C3.1L‡↔	Prä	A46B A46C A46D B61B B61C B61D
	01	B09A B60A
99.C3.1M‡↔	Prä	A46B A46C A46D B61B B61C B61D
	01	B09A B60A
99.C3.1N‡↔	Prä	A46B A46C A46D B61B B61C B61D
	01	B09A B60A
99.C3.1O‡↔	Prä	A46B A46C A46D B61B B61C B61D
	01	B09A B60A
99.C3.1P‡↔	Prä	A46A A46B A46C B61B B61C B61D
	01	B09A B60A
99.C3.1Q‡↔	Prä	A46A A46B A46C B61B B61C B61D
	01	B09A B60A
99.C3.1R‡↔	Prä	A46A A46B A46C B61B B61C B61D
	01	B09A B60A
99.C3.1S‡↔	Prä	A46A A46B A46C B61B B61C B61D
	01	B09A B60A
99.C3.1T‡↔	Prä	A46A A46B A46C B61B B61C B61D
	01	B09A B60A
99.C3.1U‡↔	Prä	A46A A46B A46C B61B B61C B61D
	01	B09A B60A
99.C3.1V‡↔	Prä	A46A A46B A46C B61B B61C B61D
	01	B09A B60A
99.C3.1W‡↔	Prä	A46A A46B A46C B61B B61C B61D
	01	B09A B60A
99.C3.1Y‡↔	Prä	A46A A46B A46C B61B B61C B61D
	01	B09A B60A
99.C3.21‡↔	Prä	A46A A46B A46C B61B B61C B61D
	01	B09A B60A
99.C3.22‡↔	Prä	A46A A46B A46C B61B B61C B61D
	01	B09A B60A
99.C3.23‡↔	Prä	A46A A46B A46C B61B B61C B61D
	01	B09A B60A
99.C3.24‡↔	Prä	A46A A46B A46C B61B B61C B61D
	01	B09A B60A
99.C3.25‡↔	Prä	A46A A46B A46C B61B B61C B61D
	01	B09A B60A
99.C3.26‡↔	Prä	A46A A46B A46C B61B B61C B61D
	01	B09A B60A
99.C3.27‡↔	Prä	A46A A46B A46C B61B B61C B61D
	01	B09A B60A
99.C3.28‡↔	Prä	A46A A46B A46C B61B B61C B61D
	01	B09A B60A
99.C3.2A‡↔	Prä	A46A A46B A46C B61B B61C B61D
	01	B09A B60A
99.C3.2B‡↔	Prä	A46A A46B A46C B61B B61C B61D
	01	B09A B60A
99.C3.2C‡↔	Prä	A46A A46B A46C B61B B61C B61D
	01	B09A B60A
99.C3.2D‡↔	Prä	A46A A46B A46C B61B B61C B61D
	01	B09A B60A

CHOP	MDC	DRG
99.C3.2E‡↔	Prä	A46A A46B A46C B61B B61C B61D
	01	B09A B60A
99.C3.2F‡↔	Prä	A46A A46B A46C B61B B61C B61D
	01	B09A B60A
99.C3.2G‡↔	Prä	A46A A46B A46C B61B B61C B61D
	01	B09A B60A
99.C3.2H‡↔	Prä	A46A A46B A46C B61B B61C B61D
	01	B09A B60A
99.C3.2I‡↔	Prä	A46A A46B A46C B61B B61C B61D
	01	B09A B60A
99.C3.2J‡↔	Prä	A46A A46B A46C B61B B61C B61D
	01	B09A B60A
99.C3.2K‡↔	Prä	A46A A46B A46C B61B B61C B61D
	01	B09A B60A
99.C4.18‡↔	01	B09A B60A
99.C4.1A‡↔	01	B09A B60A
99.C4.1B‡↔	01	B09A B60A
99.C4.1C‡↔	Prä	A46C A46D A46E
	01	B09A B60A
99.C4.1D‡↔	Prä	A46B A46C A46D A46E B61B B61C B61D
	01	B09A B60A
99.C4.1E‡↔	Prä	A46B A46C A46D A46E B61B B61C B61D
	01	B09A B60A
99.C4.1F‡↔	Prä	A46B A46C A46D A46E B61B B61C B61D
	01	B09A B60A
99.C4.1G‡↔	Prä	A46B A46C A46D A46E B61B B61C B61D
	01	B09A B60A
99.C4.1H‡↔	Prä	A46B A46C A46D A46E B61B B61C B61D
	01	B09A B60A
99.C4.1I‡↔	Prä	A46B A46C A46D A46E B61B B61C B61D
	01	B09A B60A
99.C4.1J‡↔	Prä	A46B A46C A46D A46E B61B B61C B61D
	01	B09A B60A
99.C4.1K‡↔	Prä	A46B A46C A46D B61B B61C B61D
	01	B09A B60A
99.C4.1L‡↔	Prä	A46B A46C A46D B61B B61C B61D
	01	B09A B60A
99.C4.1M‡↔	Prä	A46B A46C A46D B61B B61C B61D
	01	B09A B60A
99.C4.1N‡↔	Prä	A46B A46C A46D B61B B61C B61D
	01	B09A B60A
99.C4.1O‡↔	Prä	A46B A46C A46D B61B B61C B61D
	01	B09A B60A
99.C4.1P‡↔	Prä	A46A A46B A46C B61B B61C B61D
	01	B09A B60A
99.C4.1Q‡↔	Prä	A46A A46B A46C B61B B61C B61D
	01	B09A B60A
99.C4.1R‡↔	Prä	A46A A46B A46C B61B B61C B61D
	01	B09A B60A
99.C4.1S‡↔	Prä	A46A A46B A46C B61B B61C B61D
	01	B09A B60A
99.C4.1T‡↔	Prä	A46A A46B A46C B61B B61C B61D
	01	B09A B60A
99.C4.1U‡↔	Prä	A46A A46B A46C B61B B61C B61D
	01	B09A B60A
99.C4.1V‡↔	Prä	A46A A46B A46C B61B B61C B61D
	01	B09A B60A
99.C4.1W‡↔	Prä	A46A A46B A46C B61B B61C B61D
	01	B09A B60A
99.C4.1Y‡↔	Prä	A46A A46B A46C B61B B61C B61D
	01	B09A B60A
99.C4.21‡↔	Prä	A46A A46B A46C B61B B61C B61D
	01	B09A B60A
99.C4.22‡↔	Prä	A46A A46B A46C B61B B61C B61D
	01	B09A B60A
99.C4.23‡↔	Prä	A46A A46B A46C B61B B61C B61D
	01	B09A B60A
99.C4.24‡↔	Prä	A46A A46B A46C B61B B61C B61D
	01	B09A B60A
99.C4.25‡↔	Prä	A46A A46B A46C B61B B61C B61D
	01	B09A B60A
99.C4.26‡↔	Prä	A46A A46B A46C B61B B61C B61D
	01	B09A B60A
99.C4.27‡↔	Prä	A46A A46B A46C B61B B61C B61D
	01	B09A B60A
99.C4.28‡↔	Prä	A46A A46B A46C B61B B61C B61D
	01	B09A B60A
99.C4.2A‡↔	Prä	A46A A46B A46C B61B B61C B61D
	01	B09A B60A
99.C4.2B‡↔	Prä	A46A A46B A46C B61B B61C B61D
	01	B09A B60A
99.C4.2C‡↔	Prä	A46A A46B A46C B61B B61C B61D
	01	B09A B60A
99.C4.2D‡↔	Prä	A46A A46B A46C B61B B61C B61D
	01	B09A B60A
99.C4.2E‡↔	Prä	A46A A46B A46C B61B B61C B61D
	01	B09A B60A
99.C4.2F‡↔	Prä	A46A A46B A46C B61B B61C B61D
	01	B09A B60A
99.C4.2G‡↔	Prä	A46A A46B A46C B61B B61C B61D
	01	B09A B60A
99.C4.2H‡↔	Prä	A46A A46B A46C B61B B61C B61D
	01	B09A B60A
99.C4.2I‡↔	Prä	A46A A46B A46C B61B B61C B61D
	01	B09A B60A
99.C4.2J‡↔	Prä	A46A A46B A46C B61B B61C B61D
	01	B09A B60A
99.C4.2K‡↔	Prä	A46A A46B A46C B61B B61C B61D
	01	B09A B60A
99.C5.18‡↔	01	B09A B60A
99.C5.1A‡↔	01	B09A B60A
99.C5.1B‡↔	01	B09A B60A
99.C5.1C‡↔	Prä	A46C A46D A46E
	01	B09A B60A
99.C5.1D‡↔	Prä	A46B A46C A46D A46E B61B B61C B61D
	01	B09A B60A
99.C5.1E‡↔	Prä	A46B A46C A46D A46E B61B B61C B61D
	01	B09A B60A
99.C5.1F‡↔	Prä	A46B A46C A46D A46E B61B B61C B61D
	01	B09A B60A
99.C5.1G‡↔	Prä	A46B A46C A46D A46E B61B B61C B61D
	01	B09A B60A
99.C5.1H‡↔	Prä	A46B A46C A46D A46E B61B B61C B61D
	01	B09A B60A
99.C5.1I‡↔	Prä	A46B A46C A46D A46E B61B B61C B61D
	01	B09A B60A
99.C5.1J‡↔	Prä	A46B A46C A46D A46E B61B B61C B61D
	01	B09A B60A
99.C5.1K‡↔	Prä	A46B A46C A46D A46E B61B B61C B61D
	01	B09A B60A
99.C5.1L‡↔	Prä	A46B A46C A46D A46E B61B B61C B61D
	01	B09A B60A
99.C5.1M‡↔	Prä	A46B A46C A46D A46E B61B B61C B61D
	01	B09A B60A
99.C5.1N‡↔	Prä	A46B A46C A46D A46E B61B B61C B61D
	01	B09A B60A
99.C5.1O‡↔	Prä	A46B A46C A46D A46E B61B B61C B61D
	01	B09A B60A
99.C5.1P‡↔	Prä	A46A A46B A46C A46E B61B B61C B61D
	01	B09A B60A

PROC

PROC

CHOP	MDC	DRG
99.C5.1Q‡↔	Prä	A46A A46B A46C A46E B61B B61C B61D
	01	B09A B60A
99.C5.1R‡↔	Prä	A46A A46B A46C A46E B61B B61C B61D
	01	B09A B60A
99.C5.1S‡↔	Prä	A46A A46B A46C A46E B61B B61C B61D
	01	B09A B60A
99.C5.1T‡↔	Prä	A46A A46B A46C A46E B61B B61C B61D
	01	B09A B60A
99.C5.1U‡↔	Prä	A46A A46B A46C A46E B61B B61C B61D
	01	B09A B60A
99.C5.1V‡↔	Prä	A46A A46B A46C A46E B61B B61C B61D
	01	B09A B60A
99.C5.1W‡↔	Prä	A46A A46B A46C A46E B61B B61C B61D
	01	B09A B60A
99.C5.1Y‡↔	Prä	A46A A46B A46C A46E B61B B61C B61D
	01	B09A B60A
99.C5.21‡↔	Prä	A46A A46B A46C A46E B61B B61C B61D
	01	B09A B60A
99.C5.22‡↔	Prä	A46A A46B A46C A46E B61B B61C B61D
	01	B09A B60A
99.C5.23‡↔	Prä	A46A A46B A46C A46E B61B B61C B61D
	01	B09A B60A
99.C5.24‡↔	Prä	A46A A46B A46C A46E B61B B61C B61D
	01	B09A B60A
99.C5.25‡↔	Prä	A46A A46B A46C A46E B61B B61C B61D
	01	B09A B60A
99.C5.26‡↔	Prä	A46A A46B A46C A46E B61B B61C B61D
	01	B09A B60A
99.C5.27‡↔	Prä	A46A A46B A46C A46E B61B B61C B61D
	01	B09A B60A
99.C5.28‡↔	Prä	A46A A46B A46C A46E B61B B61C B61D
	01	B09A B60A
99.C5.2A‡↔	Prä	A46A A46B A46C A46E B61B B61C B61D
	01	B09A B60A
99.C5.2B‡↔	Prä	A46A A46B A46C A46E B61B B61C B61D
	01	B09A B60A
99.C5.2C‡↔	Prä	A46A A46B A46C A46E B61B B61C B61D
	01	B09A B60A
99.C5.2D‡↔	Prä	A46A A46B A46C A46E B61B B61C B61D
	01	B09A B60A
99.C5.2E‡↔	Prä	A46A A46B A46C A46E B61B B61C B61D
	01	B09A B60A
99.C5.2F‡↔	Prä	A46A A46B A46C A46E B61B B61C B61D
	01	B09A B60A
99.C5.2G‡↔	Prä	A46A A46B A46C A46E B61B B61C B61D
	01	B09A B60A

Globale Prozedurentabellen

In mehreren MDCs verwendete Prozedurentabellen

OR-Prozeduren

MDC	DRG
Prä	A20Z, A92A, A92B, A92C, A94A, A94B, A94C, A94D, A96A, A96B, A97A, A97B, B61A, B61B, B61C, B61D, B61E
01	B39A, B39B
04	E76A
05	F04Z, F13A, F13B, F36A, F36B, F36C, F36D, F36E
07	H37A
09	J33Z
14	O01A, O01B, O01C, O01D, O01E, O01F, O01G, O04Z
15	P02A, P02B, P02C, P03A, P03B, P04A, P04B, P04C, P05A, P05B, P05C, P05D, P60B, P61A, P66A, P66B, P66C, P66D
16	Q02A, Q02B
18B	T01A, T01B, T01C, T01D, T60F
21A	W01A, W01B, W01C, W01D, W01E, W60A, W60B
23	Z01Z

Funktionsübersicht

Diese Übersicht enthält eine Auflistung der Funktionen mit den DRGs in denen sie verwendet werden. Die genaue Definition der Funktionen inklusive der zugehörigen Kodelisten findet sich am Ende von Band 4 des SwissDRG-Definitionshandbuches.

Vakuumbehandlung [VAC]

MDC	DRG
Prä	A46C, A46D, A46E, A95C, A95E, B61B, B61C, B61D
03	D24A
05	F04Z, F59A
06	G03A, G09A, G38A, G38B, G38C
07	H01A, H33Z
08	I12B, I14A, I27A
09	J11A
12	M37Z
13	N33Z
21A	W01C
21B	X07A, X07B

Frührehabilitation, ab 7 BHT [FR 7]

MDC	DRG
Prä	A90A, A90B, A90C
01	B90A, B90B

Multiviszeraleingriff [MVE]

MDC	DRG
Prä	A97A
06	G37Z
11	L38Z

Polytrauma [PTR]

MDC	DRG
Prä	A06A, A06B, A06C, A07A, A07B, A07C, A46C, A46D, A46E

Intensivmedizinische Komplexbehandlung > 392 / 552 Aufwandspunkte [INTK I]

MDC	DRG
Prä	A11A, A11B, A11C, A11D, A36A, A36B, B61A
01	B36B
04	E36A, E36B
05	F36B, F36C, F36D
18B	T36A, T36B, T36C
21A	W01A, W01B, W01C, W01D, W01E

Bestimmte OR-Prozeduren [BORP]

MDC	DRG
Prä	A11A, A11B, A11C, A11D, A46B, A46C, A46D, A46E, A95C, A95E, A97A, A97B, A97C, A97D
04	E36A, E36B
14	O02A, O02B
17	R01A, R01B, R01C, R65A, R65B

Mehrzeitige_bestimmte OR- Prozeduren [MBOR]

MDC	DRG
Prä	A11A, A11B, A11C, A11D, A90A, A97A, A97B, B61B, B61C, B61D
01	B21A, B21B
03	D12A
04	E01A, E01B
05	F12A, F36A
08	I09C, I09D, I10B, I95A, I95B
09	J33Z
13	N01B, N01C, N33Z
17	R01A
18B	T36A
19	U01A

Eingriff an mehreren Lokalisationen [EML]

MDC	DRG
Prä	A11A, A11B, A11C, A11D, A46A, A95A, A95B, B61A, B61B, B61C, B61D
08	I02A, I02B, I02C, I05A, I08A, I08B, I09A, I09B, I10A, I13A, I13B, I20C, I20D, I22Z, I31A, I32A, I32C, I46A, I46B
21A	W01A, W01B, W01C, W01D
21B	X01A, X07A, X07B

Geriatrische Akutrehabilitation, ab 7 BHT [GFK 7]

MDC	DRG
Prä	A95A, A95B, A95C, A95D, A95E, A95F, A95G

Frührehabilitation, ab 14 BHT [FR 14]

MDC	DRG
Prä	A43A, A43B, A90A, A90B
21A	W01A, W01B, W01C, W01D, W01E

Vierzeitige komplexe OR-Prozeduren [VKOR]

MDC	DRG
Prä	A06A, A06B, A06C, A07A, A11A
01	B36A, B36B, B36C, B36D

Hochaufwendige Konstellationen [HAK]

MDC	DRG
Prä	A11A, A11B, A11C, A11D

Komplizierende Prozeduren Prä-MDC [KPP]

MDC	DRG
Prä	A11A, A11B, A11C, A11D, A46C, A46D, A46E, A95A, A97A, A97B

Vierzeitige bestimmte OR-Prozeduren [VBOR]

MDC	DRG
Prä	A11A, A11B, A11C, A11D, A36A, B61B, B61C
04	E36A, E36B, E36C, E36D
05	F04Z
06	G35A, G35B
08	I02A, I02B, I02C
21A	W01A, W01B

Aufwendige Konstellationen bei BNB

MDC	DRG
Prä	A93A, A93B, A97A, A97B, A97C, A97D
01	B01A, B02A, B66A
04	E02A, E08A, E71A, E71B
07	H41A, H41B, H61A
09	J62A
10	K64A
11	L62A
12	M60A
13	N60A
17	R01A, R50A, R60A, R60B, R61A, R61B, R61C, R62A, R63A, R63B

Komplizierende Prozeduren [KP]

MDC	DRG
Prä	A46C, A46D, A46E, A93A, A95A, A97A, A97B, A97C, A97D
01	B01A, B02A, B02B, B71A, B71B
03	D02A, D02B, D62A
04	E05A, E08A, E76A, E77A, E77B
05	F03A, F03B, F04Z, F06A, F06B, F24A, F24B, F31A, F31B, F31C, F49A, F49C, F59C, F61A
06	G03B, G16A, G16B, G18A, G19A, G38A, G38B, G38C, G40Z, G46A, G46C
07	H61A, H63A, H63B, H64A
08	I02A, I02B, I02C, I06A, I22Z, I54A
11	L38Z
12	M37Z
13	N01B, N01C, N06A, N33Z
14	O38A, O38B
16	Q60A, Q61A
17	R01A, R01B, R50A, R60A, R60B, R61A, R61B, R61C, R62A, R63A, R63B
18B	T01B, T60A, T60B, T60C, T61A, T64A
21A	W01A, W01B, W01C, W01D

MDC	DRG
21B	X01A, X07A, X07B
22	Y02A

Mehrzeitige komplexe OR-Prozeduren [MKOR]

MDC	DRG
Prä	A11A, A11B, A11C, A11D, A95A, A97A, B61A
01	B01A, B01B
03	D02A, D02B
04	E33A, E33B
05	F03B, F04Z, F06A, F31A, F31B, F31C, F59A, F90A
07	H33Z
08	I02A, I02B, I02C, I06A, I95A, I95B
09	J33Z
10	K33Z
12	M37Z
13	N33Z
18B	T01A
21A	W01A, W01B

Komplexe OR-Prozeduren [KORP]

MDC	DRG
Prä	A06A, A06B, A06C, A07A, A07B, A07C, A11A, A11B, A11C, A11D, A36A, A46B, A46C, A46D, A46E, A60A, A90A, A90B, A90C, A93A, A95A, A95B, A97A, A97B, A97C, A97D, B61B, B61C, B61D
01	B36B, B90A
03	D37A
04	E36A, E36B, E90B
05	F36B, F36C, F36D, F37A, F90A, F90B
08	I95A, I95B
09	J11A
10	K09A, K37A
11	L37A
14	O01B, O01C, O01E, O38A, O38B
17	R01A, R01B, R01C
18B	T01B, T36A, T36B
21A	W60A
21B	X01A, X06B, X07A, X07B
22	Y02A

Intensivmedizinische Komplexbehandlung > 980 / 1104 Aufwandspunkte [INTK II]

MDC	DRG
Prä	A11A, A11B, A11C, A11D, A36A, A46A, A46B, A46C, A46D
04	E36A
18B	T36A
21A	W01A, W01B

Hochkomplexe Vakuumbehandlung [VAC II]

MDC	DRG
Prä	A07B, A43A, A43B

Schwerste Verbrennungen [SVB]

MDC	DRG
Prä	A06A, A06B, A06C

Dialyse [DIAL]

MDC	DRG
05	F49A, F49C, F62A, F74A
06	G46B, G67A, G67B
11	L37A, L37B, L60A, L60B, L60C, L71Z
14	O01A
17	R60C, R61A, R61B, R61C, R63C
22	Y02A
23	Z65A

Geriatrische Akutrehabilitation, ab 14 BHT [GFK 14]

MDC	DRG
Prä	A95A, A95C, A95D, A95E

Komplexe Vakuumbehandlung [VAC I]

MDC	DRG
Prä	A06A, A06B, A06C, A07A, A07B, A07C, A90A, A90B, A95A, A95B
04	E36A
05	F04Z, F31A
06	G35A, G35B
07	H33Z
08	I98Z
09	J02A, J02B
11	L33Z
18B	T36A, T36B, T36C
21A	W01A, W01B, W01C, W01D
21B	X07A, X07B

Geriatrische Akutrehabilitation, ab 21 BHT [GFK 21]

MDC	DRG
Prä	A95C

Schwere Verbrennungen [VB]

MDC	DRG
Prä	A11A, A11B, A11C, A11D

Mehrere schwere Probleme beim Neugeborenen [MSPNG]

MDC	DRG
15	P05A, P05B, P05C, P05D, P60C, P66A, P67A

Schweres Problem beim Neugeborenen [SPNG]

MDC	DRG
15	P05A, P05B, P05C, P60A, P60B, P65A, P66A, P66B, P67A, P67B

Eingriff an mehreren Lokalisationen

Die Logik der Funktion Eingriff an mehreren Lokalisationen (vgl. Band 4) ist nach dem Schema der unten stehenden Matrix aufgebaut. Werden im Rahmen von operativen Eingriffen statt einer mehrere Körperregionen operiert, so wird in vielen DRGs der damit verbundene Mehraufwand mit Hilfe dieser Funktion im SwissDRG-System abgebildet. Jeder Körperregion in der Matrix (z.B. Becken, Kniegelenk) ist eine Liste von Prozedurenkodes zugeordnet.

Bestimmte Kombinationen von Körperregionen gelten im Sinne der Funktion nicht als „Eingriff an mehreren Lokalisationen“. Die unterschiedlichen Gründe hierfür können der Legende zur Matrix entnommen werden. So gilt z.B. die Kombination von Hüftgelenk und Oberschenkel nur bei unterschiedlicher Seitenlokalisation als „Eingriff an mehreren Lokalisationen“.

Grundsätzlich sind alle im Sinne der Funktion Eingriff an mehreren Lokalisationen gültigen Felder weiss hinterlegt – eventuelle Einschränkungen sind durch entsprechende Zeichen markiert. Alle ungültigen Felder erscheinen dunkelgrau hinterlegt, hierzu zählen auch die redundanten Paare (Felder ohne zusätzliches Zeichen). Durch einen stärkeren Rahmen hervorgehoben ist die Linie von Feldern, auf der sich gleiche Lokalisationen gegenüberstehen. Hier hängt die Gültigkeit davon ab, ob ein Eingriff an unterschiedlichen Seitenlokalisationen und damit die Angabe eines Seitenkennzeichens zum CHOP-Kode möglich ist.

	Becken	BWS	Fuß	Hand	Hüftgelenk	HWS	Kniegelenk	LWS	Oberarm	Oberschenkel	Scapula, Clavicula	Schultergelenk	Unterarm	Unterschenkel
Becken	XX	+	+	+	X	+	+	X	+	X	+	+	+	+
BWS		XX	+	+	+	+	+	+	+	+	+	+	+	+
Fuß			B	+	+	+	+	+	+	+	+	+	+	B
Hand				B	+	+	+	+	+	+	+	+	B	+
Hüftgelenk					B	+	+	+	+	B	+	+	+	+
HWS						XX	+	+	+	+	+	+	+	+
Kniegelenk							B	+	+	B	+	+	+	B
LWS								XX	+	+	+	+	+	+
Oberarm									B	+	B	B	B	+
Oberschenkel										B	+	+	+	+
Scapula, Clavicula											B	B	+	+
Schultergelenk												B	+	+
Unterarm													B	+
Unterschenkel														B

+	Funktion „Eingriff an mehreren Lokalisationen“ erfüllt (TRUE)
B	Gilt nur bei unterschiedlicher Seitenlokalisation als „mehrere Lokalisationen“
B	Gleiche Lokalisation, gilt nur bei unterschiedlicher Seitenlokalisation als „mehrere Lokalisationen“

X	Gilt zugunsten eines belastbaren Splits nicht als „mehrere Lokalisationen“
XX	Gleiche Lokalisation, Seitenkennzeichen unzulässig, daher nie „mehrere Lokalisationen“
	Redundante Paare

Anhang C

C ATC-Kode-/MDC-/DRG-Index

Dieser Anhang enthält eine Liste aller gruppierungsrelevanter ATC-Kodes sowie nähere Informationen zu den MDCs und DRGs, in denen sie verwendet werden.

ATC	MDC	DRG
CH00102	Prä	A20Z
L01XL03	Prä	A20Z
L01XL04	Prä	A20Z

Anhang D

D CCs, CC-Ausschlüsse, CCL und PCCL-Berechnung

D.1 Einleitung

Das Vorhandensein von Komplikationen und/oder Komorbiditäten (CC) kann die Behandlung von Krankheiten und Störungen erschweren und verteuern. Deshalb ist es für die SwissDRG-Klassifikation wesentlich, die unterschiedliche Schwere einer Erkrankung zu erkennen und zu berücksichtigen.

Dieser Anhang befasst sich mit Komplikationen und Komorbiditäten (CCs) und dem Verfahren, mit dem der Grouper einzelnen Datensätzen CCLs und PCCLs zuweist.

D.2 Komplikationen und Komorbiditäten

Komplikation und/oder Komorbidität (CC): CC-Kodes sind Nebendiagnosen, die in der Regel zu einem signifikant höheren Ressourcenverbrauch führen.

In der SwissDRG-Version 15.0 Katalogversion (2023/2026) stehen die in diesem Anhang aufgeführten Diagnosekodes als CCs für nicht neonatologische Behandlungsfälle zur Verfügung.

Ein Diagnosekode kann seinen CC-Status verlieren, (i) wenn er in engem Zusammenhang zur Hauptdiagnose der Behandlungsepisode steht oder (ii) wenn derselbe Kode bereits an einer anderen Stelle in diesem Datensatz erscheint.

Die Liste der CCs, die den Grossteil dieses Anhanges einnimmt, umfasst sämtliche CCs und dazugehörige CCLs.

D.3 Komplikations- Komorbiditätslevel (CCL) und patientenbezogene Gesamtschweregrade (PCCL)

Schweregrade von Komplikationen und/oder Komorbiditäten (CCL) sind Schweregrad-Stufen, die für alle Nebendiagnosen vergeben werden. Ihr Wert kann zwischen 0 und 4 für operative und neonatologische Behandlungsepisoden und zwischen 0 und 3 für medizinische Behandlungsepisoden / Basis-DRGs der anderen Partition variieren und wird aus einer Kombination von medizinischen Bewertungen und statistischen Analysen ermittelt. Unterschiedliche Basis-DRGs können unterschiedliche CCL-Werte aufweisen. So kann beispielsweise die Diagnose J96.00 *Akute respiratorische Insuffizienz, anderenorts nicht klassifiziert: Typ I [hypoxisch]* in der Basis-DRG B70 Apoplexie einen CCL-Wert 1 besitzen, während sie in der der Basis-DRG F49 Invasive kardiologische Diagnostik ausser bei akutem Myokardinfarkt den CCL-Wert 2 aufweist.

Welcher CCL-Wert einer Diagnose tatsächlich zugewiesen wird, hängt davon ab, ob es sich beim Kode um eine gültige CC handelt und ob diese bezogen auf die Basis-DRG dieses Datensatzes als leichte, mäßig schwere, schwere oder äußerst schwere CC eingestuft ist. Das heisst:

CCL = 0	Der Kode ist keine Komplikation oder Komorbidität, oder der Kode ist Teil der Definition der DRG, der dieser Behandlungsepisode zugewiesen wurde, oder der Kode kennzeichnet eine Komplikation oder Komorbidität, die jedoch eng mit der Hauptdiagnose verbunden ist, oder genau derselbe Kode ist bereits an einer anderen Stelle des Datensatzes enthalten.
CCL = 1	Der Kode kennzeichnet eine leichte CC.
CCL = 2	Der Kode kennzeichnet eine mäßig schwere CC.
CCL = 3	Der Kode kennzeichnet eine schwere CC.
CCL = 4	Der Kode kennzeichnet eine äußerst schwere CC.

Der Grouper ermittelt für jede Diagnose in einem Datensatz automatisch den CCL-Wert, verwendet jedoch bei Neugeborenen und Fällen ausser Neugeborenen unterschiedliche Verfahren. In Fällen, in denen es sich nicht um Neugeborene handelt, geht der Grouper folgendermassen vor:

1. Der Grouper überprüft, ob die Basis-DRG die Diagnosen Polytrauma (Basis-DRGs W01-W61) beinhaltet. Da die Diagnose Trauma bereits bei der Zuordnung zu MDC 21A berücksichtigt wurde, wird eine Nebendiagnose Trauma (S00.00-T14.9, T79.0-T79.9, T89.00-T89.03) nicht als CC anerkannt und erhält den CCL-Wert Null.
2. Der Grouper überprüft, ob der Kode eine Doublette der Hauptdiagnose oder einer bereits vorher verarbeiteten Nebendiagnose ist. Ist dies der Fall, erhält er den CCL-Wert Null.
3. Der Grouper überprüft, ob der Kode aufgrund seines engen Bezuges zur Hauptdiagnose als CC ausgeschlossen werden soll (Hinweis: Informationen dazu sind in der CC-Ausschlussliste in den Begleit-Dokumenten enthalten). Ist dies der Fall, erhält er den CCL-Wert Null.
4. Der Grouper ermittelt anhand der Basis-DRG und der Diagnose den CCL-Wert.

Abbildung D.1 zeigt den Verfahrensablauf für die Zuordnung von CCLs bei anderen Fällen als Neugeborenen. (Hinweis: Obwohl der Grouper auch in diesen Fällen CCL-Werte für die Hauptdiagnose ermittelt, verwendet er diese Werte jedoch nicht zur Berechnung des PCCL).

Abbildung D.1 Verfahren zur PCCL-Berechnung für Nicht-Neugeborene

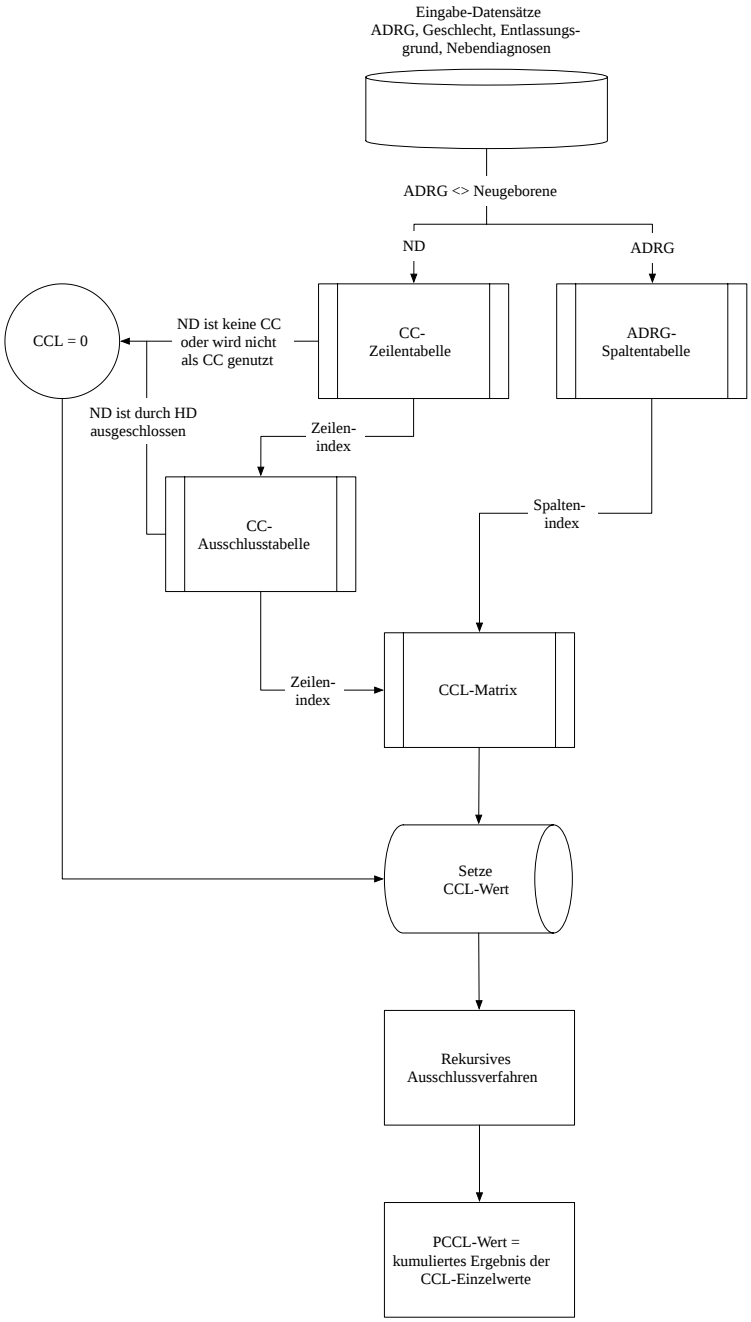

Für Neugeborenenepisoden – d.h. Behandlungsfälle, die den Basis-DRGs P02-P67 zugeordnet wurden – wird ein anderes Verfahren verwendet. Alle Diagnosekodes werden hierbei als Nebendiagnosen behandelt. Abbildung D.2 gibt einen Überblick über das Verfahren zur Zuweisung von CCL-Werten bei Neugeborenen. [Hinweis: Die für Neugeborene berechneten CCL- und PCCL-Werte dienen nicht zur Zuweisung von DRGs. Neugeborenenepisoden werden DRGs auf Basis der Liste schwerer Probleme für MDC 15 zugewiesen (siehe Band 3).]

Abbildung D.2 Verfahren zur PCCL-Berechnung für Neugeborene

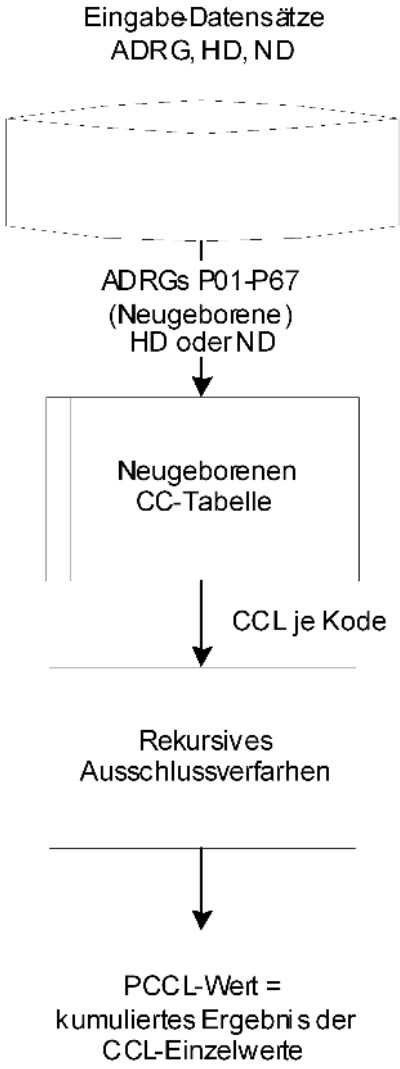

Patientenbezogener Gesamtschweregrad (PCCL) ist die Masszahl für den kumulativen Effekt der CCs je Behandlungsepisode. Die Ermittlung erfolgt in einem komplexen Verfahren, um zu vermeiden, dass ähnliche Umstände mehrfach gewertet werden. Die PCCL-Werte haben folgende Bedeutung:

0 =	keine CC
1 =	leichte CC
2 =	mässig schwere CC
3 =	schwere CC
4 =	äusserst schwere CC
5 oder 6 =	schwerste CC

Nachdem für jede Diagnose eines Datensatzes ein CCL-Wert ermittelt wurde (unabhängig davon, ob es sich um eine Neugeborenen- oder eine andere Behandlungsepisode handelt), sortiert der Grouper die Nebendiagnosen nach ihrem CCL-Wert in absteigender Reihenfolge und führt daran ein Ausschlussverfahren durch. Bei diesem Verfahren, das dazu dient, nicht signifikante Diagnosen auszuschliessen und ähnliche Diagnosen nur einmal zu zählen, wird jede Diagnose der Reihe nach so behandelt, als wäre sie die Hauptdiagnose. D.h. jede Diagnose wird nacheinander als „Anker-Diagnose“ behandelt, und der CC-Status der anderen Diagnosen wird in Bezug zu dieser Anker-Diagnose überprüft. Als Ergebnis dieses Vorgangs werden einige Nebendiagnosen als CCs ausgeschlossen (und erhalten somit den CCL-Wert Null). Diese Entscheidung fällt nicht aufgrund ihrer Beziehung zur Hauptdiagnose, sondern aufgrund der Beziehung zu einer anderen Nebendiagnose.

Es ist zu beachten, dass es sich bei den von der Grouper-Software ausgegebenen CCL-Werten um diejenigen handelt, die vor dem Ausschlussverfahren zugewiesen werden.

Am Ende des rekursiven Ausschlussverfahrens berechnet der Grouper mit Hilfe einer Formel auf Basis der verbleibenden CCL-Werte den PCCL.

Abbildung D.3 Formel zur Berechnung des patientenbezogenen Gesamtschweregrades (PCCL)

Formel zur Berechnung des patientenbezogenen Gesamtschweregrades (PCCL)

Sei $CCL = (CCL_1, CCL_2, \dots, CCL_n)$ ein Vektor, welcher die durch das Ausschlussverfahren n ermittelten CCL-Werte enthält. Der PCCL-Wert wird folgendermassen ermittelt:

$$PCCL = \begin{cases} 0 & , \quad falls\ SCCL \leq 1 \\ 6 & , \quad x > 6 \\ \lfloor x + 0.5 \rfloor & , \quad sonst \end{cases}$$

$$wobei\ x = \begin{cases} \dfrac{4}{\ln\left(\frac{3}{\alpha}\right)} \ln(SCCL) & , \quad SCCL < \left(\dfrac{3}{\alpha}\right)^{\frac{p}{4}} \\ t\dfrac{4}{\ln\left(\frac{3}{\alpha}\right)} \left(\dfrac{SCCL}{\left(\frac{3}{\alpha}\right)^{\frac{p}{4}}} - 1 \right) + p & , \quad sonst \end{cases}$$

$$und\ SCCL = \sum_{i=k}^{n} CCL_i e^{-\alpha(i-k)}$$

Parameter	Beschreibung	Ausprägung
α	Gewichtungsparameter der CCL-Werte, $0 < \alpha \in \mathbb{R} < 3$	0.3
p	Beginn der linearen Fortsetzung, $p \in \mathbb{R}^+$	3
t	Steigungsparameter der linearen Fortsetzung, $t \in \mathbb{R}^+$	1.15
k	Angabe zum Einbezug der Hauptdiagnose in die PCCL-Berechnung, $k \in \{1,2\}$	$\begin{cases} 1, & MDC\ 15 \\ 2, & sonst \end{cases}$

Der Algorithmus wurde von Dr. Xichuan (Mark) Zhang im Rahmen des CCL Refinement Project entwickelt und im Rahmen der SwissDRG-Weiterentwicklung modifiziert.

Die folgende Tabelle enthält die PCCL-Werte, die sich aus unterschiedlichen Kombinationen von CCL-Werten ergeben.

Tabelle D.1 Kombination von CCL-Werten zur Ermittlung des PCCL von 1 bis 6

PCCL	CCL1	CCL 2	CCL3	CCL4	CCL5	CCL6	CCL7
6	4	4	4	4	4	4	0
6	4	4	4	4	4	2	2
6	4	4	4	4	3	3	2
5	4	4	4	4	4	3	0
5	4	4	3	3	1	0	0
5	4	4	2	2	2	1	1
4	4	4	3	3	0	0	0
4	4	3	2	0	0	0	0
4	4	3	1	1	0	0	0
4	3	3	2	2	0	0	0
4	3	2	2	2	1	1	1
3	3	3	2	1	1	0	0
3	4	1	0	0	0	0	0
3	3	2	0	0	0	0	0
3	2	1	1	1	1	1	0
2	2	2	1	0	0	0	0
2	4	0	0	0	0	0	0
2	2	2	0	0	0	0	0
2	1	1	1	1	0	0	0
1	1	1	1	0	0	0	0
1	2	0	0	0	0	0	0
1	1	1	0	0	0	0	0
0	1	0	0	0	0	0	0
0	0	0	0	0	0	0	0

D.4 Beispiele

Berechnung des PCCL für drei Behandlungsepisoden, die nicht zur Kategorie Neugeborene gehören

Anhand der folgenden drei Fälle wird deutlich, wie der Grouper bei der Berechnung des PCCL andere Variablen neben der Diagnose berücksichtigt. Die Falldarstellungen dienen lediglich als Illustration der PCCL-Ermittlung und lassen keine Rückschlüsse auf den CC-Wert einzelner Diagnosen zu.

Fall 1

Es handelt sich um einen 74-jährigen männlichen Patienten, der nach einem dreitägigen Spitalaufenthalt nach Hause entlassen wurde. Die Hauptdiagnose – d.h. derjenige Zustand, der am Ende des Spitalaufenthaltes als Diagnose feststeht und der der Hauptanlass für die Behandlung und Untersuchung des Patienten war – lautete F43.9 *Reaktion auf schwere Belastung, nicht näher bezeichnet*. Nebendiagnosen waren F13.5 *Psychische und Verhaltensstörungen durch Sedativa oder Hypnotika: Psychotische Störung*, F10.0 *Psychische und Verhaltensstörungen durch Alkohol: Akute Intoxikation [akuter Rausch]* (zweimal vermerkt), I25.9 *Chronische ischämische Herzkrankheit, nicht näher bezeichnet*, M47.86 *Sonstige Spondylose: Lumbalbereich*, M47.82 *Sonstige Spondylose: Zervikalbereich*.

Dieser Datensatz würde der MDC 19 und der Basis-DRG U66 zugeordnet. Anschliessend würde der Grouper folgende Schritte zur Berechnung des PCCL ausführen:

Jeder Diagnose wird der Reihe nach – von links beginnend – ein CCL-Wert zugewiesen:

HD/ND	F43.9	F13.5	F10.0	I25.9	M47.86	M47.82	F10.0
	⬇ F43.9 ist kein CC-Kode						
CCLs	0						
		⬇ F13.5 ist ein CC-Kode					
CCLs	0	1					
			⬇ F10.0 ist ein CC-Kode				
CCLs	0	1	1				
				⬇ I25.9 ist kein CC-Kode			
CCLs	0	1	1	0			
					⬇ M47.86 ist kein CC-Kode		
CCLs	0	1	1	0	0		
						⬇ M47.82 ist kein CC-Kode	
CCLs	0	1	1	0	0	0	
CCLs	0	1	1	0	0	0	0

Die ND werden nach dem höchsten CCL-Wert in absteigender Reihenfolge neu geordnet:

HD/ND	F43.9	F13.5	F10.0	I25.9	M47.86	M47.82	F10.0
CCLs	0	2	1	0	0	0	0
CCLs	0	2	1	0	0	0	0

Rundung

PCCL= 1

Fall 2

Es handelt sich um einen 35-jährigen männlichen Patienten, der nach einem fünftägigen Spitalaufenthalt nach Hause entlassen wurde. Die Hauptdiagnose für diese Behandlungsepisode lautete D59.2 *Arzneimittelinduzierte nicht autoimmunhämolytische Anämie*. Als Nebendiagnosen wurden folgende Kodes dokumentiert: D61.8 *Sonstige näher bezeichnete aplastische Anämien*, A31.0 *Infektion der Lunge durch sonstige Mykobakterien*, A60.0 *Infektion der Genitalorgane und des Urogenitaltraktes durch Herpesviren*, B37.0 *Candida-Stomatitis*, B37.81 *Candida-Ösophagitis* und B24 *Nicht näher bezeichnete HIV-Krankheit [Humane Immundefizienz-Viruskrankheit]*.

Dieser Datensatz würde der MDC 16 sowie der Basis-DRG Q61 zugeordnet. Anschliessend würde der Grouper folgende Schritte zur Berechnung des PCCL ausführen:

Jeder Diagnose wird der Reihe nach – von links beginnend – ein CCL-Wert zugewiesen:

HD/ND	**D59.2**	**D61.8**	**A31.0**	**A60.0**	**B37.0**	**B37.81**	**B24**
	⬇ D59.2 ist ein CC-Kode						
CCLs	2						
		⬇ HD D59.2 ist in der CC-Ausschlussliste für D61.8 vermerkt, daher CCL = 0					
CCLs	2	0					
			⬇ A31.0 ist ein CC-Kode				
CCLs	2	0	3				
				⬇ A60.0 ist kein CC-Kode			
CCLs	2	0	3	0			
					⬇ B37.0 ist ein CC-Kode		
CCLs	2	0	3	0	2		
						⬇ B37.81 ist ein CC-Kode	
CCLs	2	0	3	0	2	2	
							⬇ B24 ist ein CC-Kode
CCLs	2	0	3	0	2	2	1

Die ND werden nach dem höchsten CCL-Wert in absteigender Reihenfolge neu geordnet:

HD/ND	**A31.0**	**D59.2**	**B37.0**	**B37.81**	**D61.8**	**A60.0**	**B24**
CCLs	3	2	2	2	0	0	1
				⬇ B37.0 ist in der CC-Ausschlussliste für B37.81 vermerkt, daher CCL = 0			
CCLs	3	2	2	0	0	0	1

Rundung

PCCL = 3

Fall 3

In diesem Fall handelt es sich um eine 46-jährige Patientin, die nach achttägigem Spitalaufenthalt nach Hause entlassen wurde. Als Hauptdiagnose wurde C79.6 *Sekundäre bösartige Neubildung des Ovars* festgestellt. Die Nebendiagnosen waren C79.82 *Sekundäre bösartige Neubildung der Genitalorgane*, C78.6 *Sekundäre bösartige Neubildung des Retroperitoneums und des Peritoneums*, C78.5 *Sekundäre bösartige Neubildung des Dickdarmes und des Rektums* und C97 *Bösartige Neubildungen als Primärtumoren an mehreren Lokalisationen*. Als durchgeführte Prozeduren wurden

65.13 *Laparoskopische Biopsie am Ovar* und 66.11.31 *Biopsie an den Tubae uterinae, laparoskopisch* [L] kodiert.

Der Grouper würde diesen Datensatz der MDC 13 und der Basis-DRG N02 zuordnen. Anschliessend würde der Grouper folgende Schritte zur Berechnung des PCCL ausführen:

Jeder Diagnose wird der Reihe nach – von links beginnend – ein CCL-Wert zugewiesen:

HD/ND	**C79.6**	**C79.82**	**C78.6**	**C78.5**	**C97**
	⬇ C79.6 ist ein CC-Kode für weibliche Patienten				
CCLs	4				
		⬇ C79.82 ist ein CC-Kode für weibliche Patienten			
CCLs	4	1			
			⬇ C78.6 ist ein CC-Kode		
CCLs	4	1	1		
				⬇ C78.5 ist ein CC-Kode	
CCLs	4	1	1	1	
					⬇ C97 ist kein CC-Kode
CCLs	4	1	1	1	0

Die ND werden nach dem höchsten CCL-Wert in absteigender Reihenfolge neu geordnet:

HD/ND	**C79.6**	**C79.82**	**C78.6**	**C78.5**	**C97**
CCLs	4	1	1	1	0

Rundung

PCCL= 1

ICD	Beschreibung	OP CCL	Med. CCL
A02.0	Salmonellenenteritis	2	2
A02.1	Salmonellensepsis	2	2
A04.70	Enterokolitis durch Clostridium difficile ohne Megakolon, ohne sonstige Organkomplikationen	2	2
A04.71	Enterokolitis durch Clostridium difficile ohne Megakolon, mit sonstigen Organkomplikationen	3	3
A04.72	Enterokolitis durch Clostridium difficile mit Megakolon, ohne sonstige Organkomplikationen	2	2
A04.73	Enterokolitis durch Clostridium difficile mit Megakolon, mit sonstigen Organkomplikationen	3	3
A07.1	Giardiasis [Lambliasis]	2	2
A07.3	Isosporose	2	2
A08.0	Enteritis durch Rotaviren	2	2
A08.1	Akute Gastroenteritis durch Norovirus	2	2
A09.0	Sonstige und nicht näher bezeichnete Gastroenteritis und Kolitis infektiösen Ursprungs	2	2
A15.0	Lungentuberkulose, durch mikroskopische Untersuchung des Sputums gesichert, mit oder ohne Nachweis durch Kultur oder molekularbiologische Verfahren	3, 4	3
A15.1	Lungentuberkulose, nur durch Kultur gesichert	3, 4	3
A15.2	Lungentuberkulose, histologisch gesichert	3, 4	3
A15.3	Lungentuberkulose, durch sonstige und nicht näher bezeichnete Untersuchungsverfahren gesichert	2	2
A15.4	Tuberkulose der intrathorakalen Lymphknoten, bakteriologisch, molekularbiologisch oder histologisch gesichert	3, 4	3
A15.5	Tuberkulose des Larynx, der Trachea und der Bronchien, bakteriologisch, molekularbiologisch oder histologisch gesichert	3, 4	3
A15.6	Tuberkulöse Pleuritis, bakteriologisch, molekularbiologisch oder histologisch gesichert	3, 4	3
A15.7	Primäre Tuberkulose der Atmungsorgane, bakteriologisch, molekularbiologisch oder histologisch gesichert	3, 4	3
A15.8	Sonstige Tuberkulose der Atmungsorgane, bakteriologisch, molekularbiologisch oder histologisch gesichert	3, 4	3
A15.9	Nicht näher bezeichnete Tuberkulose der Atmungsorgane, bakteriologisch, molekularbiologisch oder histologisch gesichert	2	2
A16.0	Lungentuberkulose, weder bakteriologisch, molekularbiologisch noch histologisch gesichert	3, 4	3
A16.1	Lungentuberkulose, bakteriologische, molekularbiologische und histologische Untersuchung nicht durchgeführt	3, 4	3
A16.2	Lungentuberkulose ohne Angabe einer bakteriologischen, molekularbiologischen oder histologischen Sicherung	3, 4	3
A16.3	Tuberkulose der intrathorakalen Lymphknoten ohne Angabe einer bakteriologischen, molekularbiologischen oder histologischen Sicherung	3, 4	3
A16.4	Tuberkulose des Larynx, der Trachea und der Bronchien ohne Angabe einer bakteriologischen, molekularbiologischen oder histologischen Sicherung	3, 4	3
A16.5	Tuberkulöse Pleuritis ohne Angabe einer bakteriologischen, molekularbiologischen oder histologischen Sicherung	3, 4	3
A16.7	Primäre Tuberkulose der Atmungsorgane ohne Angabe einer bakteriologischen, molekularbiologischen oder histologischen Sicherung	3, 4	3
A16.8	Sonstige Tuberkulose der Atmungsorgane ohne Angabe einer bakteriologischen, molekularbiologischen oder histologischen Sicherung	3, 4	3
A16.9	Nicht näher bezeichnete Tuberkulose der Atmungsorgane ohne Angabe einer bakteriologischen, molekularbiologischen oder histologischen Sicherung	3, 4	3
A17.0	Tuberkulöse Meningitis {G01}	3, 4	3
A17.1	Meningeales Tuberkulom {G07}	3, 4	3
A17.8	Sonstige Tuberkulose des Nervensystems	3, 4	3
A17.9	Tuberkulose des Nervensystems, nicht näher bezeichnet {G99.8}	3, 4	3
A18.0	Tuberkulose der Knochen und Gelenke	2	2
A18.1	Tuberkulose des Urogenitalsystems	2, 3, 4	2, 3
A18.2	Tuberkulose peripherer Lymphknoten	2, 3, 4	1, 2, 3
A18.3	Tuberkulose des Darmes, des Peritoneums und der Mesenteriallymphknoten	3, 4	3
A18.4	Tuberkulose der Haut und des Unterhautgewebes	2	2
A18.5	Tuberkulose des Auges	2, 3, 4	2
A18.6	Tuberkulose des Ohres	2	2
A18.7	Tuberkulose der Nebennieren {E35.1}	2	1, 2
A18.8	Tuberkulose sonstiger näher bezeichneter Organe	2	2
A19.0	Akute Miliartuberkulose einer einzelnen näher bezeichneten Lokalisation	3, 4	3
A19.1	Akute Miliartuberkulose mehrerer Lokalisationen	3, 4	3

ICD	Beschreibung	OP CCL	Med. CCL
A19.2	Akute Miliartuberkulose, nicht näher bezeichnet	3, 4	3
A19.8	Sonstige Miliartuberkulose	3, 4	3
A19.9	Miliartuberkulose, nicht näher bezeichnet	3, 4	3
A31.0	Infektion der Lunge durch sonstige Mykobakterien	3, 4	3
A31.80	Disseminierte atypische Mykobakteriose	3, 4	3
A32.1	Meningitis und Meningoenzephalitis durch Listerien	3, 4	3
A32.7	Listeriensepsis	3, 4	3
A34	Tetanus während der Schwangerschaft, der Geburt und des Wochenbettes	2	2
A35	Sonstiger Tetanus	3, 4	3
A39.0	Meningokokkenmeningitis {G01}	3, 4	3
A39.1	Waterhouse-Friderichsen-Syndrom {E35.1}	3, 4	3
A39.2	Akute Meningokokkensepsis	3, 4	3
A39.3	Chronische Meningokokkensepsis	3, 4	3
A39.4	Meningokokkensepsis, nicht näher bezeichnet	3, 4	3
A39.5	Herzkrankheit durch Meningokokken	1, 2, 3	1, 2
A39.8	Sonstige Meningokokkeninfektionen	3, 4	3
A39.9	Meningokokkeninfektion, nicht näher bezeichnet	3, 4	3
A40.0	Sepsis durch Streptokokken, Gruppe A	3, 4	2, 3
A40.1	Sepsis durch Streptokokken, Gruppe B	3, 4	2, 3
A40.2	Sepsis durch Streptokokken, Gruppe D, und Enterokokken	3, 4	2, 3
A40.3	Sepsis durch Streptococcus pneumoniae	3, 4	2, 3
A40.8	Sonstige Sepsis durch Streptokokken	3, 4	2, 3
A41.0	Sepsis durch Staphylococcus aureus	3, 4	2, 3
A41.1	Sepsis durch sonstige näher bezeichnete Staphylokokken	3, 4	2, 3
A41.2	Sepsis durch nicht näher bezeichnete Staphylokokken	2, 3	1, 2
A41.3	Sepsis durch Haemophilus influenzae	3, 4	2, 3
A41.4	Sepsis durch Anaerobier	3, 4	2, 3
A41.51	Sepsis: Escherichia coli [E. coli]	3, 4	2, 3
A41.52	Sepsis: Pseudomonas	3, 4	2, 3
A41.58	Sepsis: Sonstige gramnegative Erreger	3, 4	2, 3
A41.8	Sonstige näher bezeichnete Sepsis	3, 4	2, 3
A42.0	Aktinomykose der Lunge	3, 4	3
A42.1	Abdominale Aktinomykose	3, 4	3
A42.7	Aktinomykotische Sepsis	3, 4	3
A43.0	Pulmonale Nokardiose	3, 4	3
A46	Erysipel [Wundrose]	1, 2	1
A48.0	Gasbrand [Gasödem]	3, 4	3
A48.1	Legionellose mit Pneumonie	3, 4	3
A48.2	Legionellose ohne Pneumonie [Pontiac-Fieber]	3, 4	3
A48.3	Syndrom des toxischen Schocks	3, 4	3
A49.0	Staphylokokkeninfektion nicht näher bezeichneter Lokalisation	1, 2	1
A49.1	Streptokokken- und Enterokokkeninfektion nicht näher bezeichneter Lokalisation	1, 2	1
A49.2	Infektion durch Haemophilus influenzae nicht näher bezeichneter Lokalisation	1, 2	1
A50.4	Konnatale spätauftretende Neurosyphilis [Juvenile Neurosyphilis]	3, 4	3
A52.0	Kardiovaskuläre Syphilis	1, 2, 3	1, 2
A52.1	Floride Neurosyphilis	2, 3	1, 2, 3
A52.2	Asymptomatische Neurosyphilis	3, 4	3
A52.3	Neurosyphilis, nicht näher bezeichnet	2, 3	1, 2, 3
A54.0	Gonokokkeninfektion des unteren Urogenitaltraktes ohne periurethralen Abszess oder Abszess der Glandulae urethrales	2	2
A54.1	Gonokokkeninfektion des unteren Urogenitaltraktes mit periurethralem Abszess oder Abszess der Glandulae urethrales	2	2
A54.2	Pelviperitonitis durch Gonokokken und Gonokokkeninfektionen sonstiger Urogenitalorgane	2	2
A81.0	Creutzfeldt-Jakob-Krankheit	3, 4	3
A81.1	Subakute sklerosierende Panenzephalitis	3, 4	3
A81.2	Progressive multifokale Leukenzephalopathie	3, 4	3
A81.8	Sonstige atypische Virusinfektionen des Zentralnervensystems	2, 3	2
A84.0	Fernöstliche Enzephalitis, durch Zecken übertragen [Russische Frühsommer-Enzephalitis]	2, 3	1, 2, 3
A84.1	Mitteleuropäische Enzephalitis, durch Zecken übertragen	2, 3	1, 2, 3
A84.8	Sonstige Virusenzephalitis, durch Zecken übertragen	2, 3	1, 2, 3
A85.0	Enzephalitis durch Enteroviren {G05.1}	3, 4	3
A85.1	Enzephalitis durch Adenoviren {G05.1}	3, 4	3
A85.2	Virusenzephalitis, durch Arthropoden übertragen, nicht näher bezeichnet	3, 4	3
A85.8	Sonstige näher bezeichnete Virusenzephalitis	3, 4	3
A86	Virusenzephalitis, nicht näher bezeichnet	2, 3	1, 2, 3
A87.0	Meningitis durch Enteroviren {G02.0}	2, 3	1, 2, 3
A98.5	Hämorrhagisches Fieber mit renalem Syndrom	3, 4	2, 3
B00.3	Meningitis durch Herpesviren {G02.0}	3, 4	3
B00.4	Enzephalitis durch Herpesviren {G05.1}	3, 4	3
B00.5	Augenkrankheit durch Herpesviren	1	1
B00.7	Disseminierte Herpesvirus-Krankheit	3, 4	3
B00.8	Sonstige Infektionsformen durch Herpesviren	2, 3, 4	2, 3
B01.1	Varizellen-Enzephalitis {G05.1}	3, 4	3
B01.2	Varizellen-Pneumonie {J17.1}	3, 4	3

ICD	Beschreibung	OP CCL	Med. CCL
B02.0	Zoster-Enzephalitis {G05.1}	3, 4	3
B02.1	Zoster-Meningitis {G02.0}	3, 4	3
B02.2	Zoster mit Beteiligung anderer Abschnitte des Nervensystems	2, 3	2
B02.7	Zoster generalisatus	1	1
B05.0	Masern, kompliziert durch Enzephalitis {G05.1}	3, 4	3
B05.1	Masern, kompliziert durch Meningitis {G02.0}	2, 4	2
B05.2	Masern, kompliziert durch Pneumonie {J17.1}	3, 4	3
B05.3	Masern, kompliziert durch Otitis media {H67.1}	2	2
B05.4	Masern mit Darmkomplikationen	2, 4	2
B05.8	Masern mit sonstigen Komplikationen	2, 4	2
B06.0	Röteln mit neurologischen Komplikationen	2	2
B06.8	Röteln mit sonstigen Komplikationen	2, 4	2
B16.0	Akute Virushepatitis B mit Delta-Virus (Begleitinfektion) und mit Coma hepaticum	1, 2, 3	1, 2, 3
B16.1	Akute Virushepatitis B mit Delta-Virus (Begleitinfektion) ohne Coma hepaticum	1, 2, 3	1, 2, 3
B16.2	Akute Virushepatitis B ohne Delta-Virus mit Coma hepaticum	1, 2, 3	1, 2, 3
B16.9	Akute Virushepatitis B ohne Delta-Virus und ohne Coma hepaticum	1, 2, 3	1, 2, 3
B17.0	Akute Delta-Virus- (Super-) Infektion eines Hepatitis-B- (Virus-) Trägers	1, 2, 3	1, 2, 3
B17.1	Akute Virushepatitis C	1, 2, 3	1, 2, 3
B17.2	Akute Virushepatitis E	1, 2, 3	1, 2, 3
B17.8	Sonstige näher bezeichnete akute Virushepatitis	1, 2, 3	1, 2, 3
B17.9	Akute Virushepatitis, nicht näher bezeichnet	1, 2, 3	1, 2, 3
B18.0	Chronische Virushepatitis B mit Delta-Virus	1, 2, 3	1, 2, 3
B18.11	Chronische Virushepatitis B ohne Delta-Virus, Phase 1	1, 2, 3	1, 2, 3
B18.12	Chronische Virushepatitis B ohne Delta-Virus, Phase 2	1, 2, 3	1, 2, 3
B18.14	Chronische Virushepatitis B ohne Delta-Virus, Phase 4	1, 2, 3	1, 2, 3
B18.19	Chronische Virushepatitis B ohne Delta-Virus, Phase nicht näher bezeichnet	1, 2, 3	1, 2, 3
B18.2	Chronische Virushepatitis C	2, 3, 4	1, 2, 3
B18.8	Sonstige chronische Virushepatitis	1, 2, 3	1, 2, 3
B19.0	Nicht näher bezeichnete Virushepatitis mit hepatischem Koma	1, 2, 3	1, 2, 3
B19.9	Nicht näher bezeichnete Virushepatitis ohne hepatisches Koma	1, 2, 3	1, 2, 3
B20	Infektiöse und parasitäre Krankheiten infolge HIV-Krankheit [Humane Immundefizienz-Viruskrankheit]	2, 3	2, 3
B21	Bösartige Neubildungen infolge HIV-Krankheit [Humane Immundefizienz-Viruskrankheit]	2, 3	2, 3
B22	Sonstige näher bezeichnete Krankheiten infolge HIV-Krankheit [Humane Immundefizienz-Viruskrankheit]	2, 3	2, 3
B23.0	Akutes HIV-Infektionssyndrom	2, 3	2, 3
B23.8	Sonstige näher bezeichnete Krankheitszustände infolge HIV-Krankheit	2, 3	2, 3
B24	Nicht näher bezeichnete HIV-Krankheit [Humane Immundefizienz-Viruskrankheit]	1	1, 2
B25.0	Pneumonie durch Zytomegalieviren {J17.1}	3, 4	3
B25.1	Hepatitis durch Zytomegalieviren {K77.0}	3, 4	3
B25.2	Pankreatitis durch Zytomegalieviren {K87.1}	3, 4	3
B25.80	Infektion des Verdauungstraktes durch Zytomegalieviren	3, 4	3
B25.88	Sonstige Zytomegalie	3, 4	3
B25.9	Zytomegalie, nicht näher bezeichnet	3, 4	3
B26.0	Mumps-Orchitis {N51.1}	2	2
B26.1	Mumps-Meningitis {G02.0}	3, 4	3
B26.2	Mumps-Enzephalitis {G05.1}	3, 4	3
B26.3	Mumps-Pankreatitis {K87.1}	2, 3	2
B26.8	Mumps mit sonstigen Komplikationen	2, 4	2
B37.0	Candida-Stomatitis	2	2
B37.1	Kandidose der Lunge	3, 4	3
B37.3	Kandidose der Vulva und der Vagina {N77.1}	1	1
B37.4	Kandidose an sonstigen Lokalisationen des Urogenitalsystems	1	1
B37.5	Candida-Meningitis {G02.1}	3, 4	3
B37.6	Candida-Endokarditis {I39.8}	3, 4	3
B37.7	Candida-Sepsis	3, 4	3
B37.81	Candida-Ösophagitis	2	2
B37.88	Kandidose an sonstigen Lokalisationen	3, 4	3
B38.0	Akute Kokzidioidomykose der Lunge	3, 4	3
B38.1	Chronische Kokzidioidomykose der Lunge	3, 4	3
B38.2	Kokzidioidomykose der Lunge, nicht näher bezeichnet	3, 4	3
B38.4	Kokzidioidomykose der Meningen {G02.1}	3, 4	3
B38.7	Disseminierte Kokzidioidomykose	3, 4	3
B38.8	Sonstige Formen der Kokzidioidomykose	3, 4	3
B38.9	Kokzidioidomykose, nicht näher bezeichnet	2	2
B39.0	Akute Histoplasmose der Lunge durch Histoplasma capsulatum	2	2
B39.1	Chronische Histoplasmose der Lunge durch Histoplasma capsulatum	2	2
B39.2	Histoplasmose der Lunge durch Histoplasma capsulatum, nicht näher bezeichnet	2	2
B39.3	Disseminierte Histoplasmose durch Histoplasma capsulatum	2	2
B39.4	Histoplasmose durch Histoplasma capsulatum, nicht näher bezeichnet	2	2
B39.5	Histoplasmose durch Histoplasma duboisii	2	2

ICD	Beschreibung	OP CCL	Med. CCL
B39.9	Histoplasmose, nicht näher bezeichnet	2	2
B40.0	Akute Blastomykose der Lunge	2	2
B40.1	Chronische Blastomykose der Lunge	2	2
B40.2	Blastomykose der Lunge, nicht näher bezeichnet	2	2
B40.3	Blastomykose der Haut	2	2
B40.7	Disseminierte Blastomykose	2	2
B40.8	Sonstige Formen der Blastomykose	2	2
B40.9	Blastomykose, nicht näher bezeichnet	2	2
B41.0	Parakokzidioidomykose der Lunge	2	2
B41.7	Disseminierte Parakokzidioidomykose	2	2
B41.8	Sonstige Formen der Parakokzidioidomykose	2	2
B41.9	Parakokzidioidomykose, nicht näher bezeichnet	2	2
B44.0	Invasive Aspergillose der Lunge	3, 4	3
B44.1	Sonstige Aspergillose der Lunge	3, 4	3
B44.2	Aspergillose der Tonsillen	3, 4	3
B44.7	Disseminierte Aspergillose	3, 4	3
B44.8	Sonstige Formen der Aspergillose	3, 4	3
B44.9	Aspergillose, nicht näher bezeichnet	3, 4	3
B45.0	Kryptokokkose der Lunge	3, 4	3
B45.1	Kryptokokkose des Gehirns	3, 4	3
B45.2	Kryptokokkose der Haut	3, 4	3
B45.3	Kryptokokkose der Knochen	3, 4	3
B45.7	Disseminierte Kryptokokkose	3, 4	3
B45.8	Sonstige Formen der Kryptokokkose	3, 4	3
B45.9	Kryptokokkose, nicht näher bezeichnet	3, 4	3
B46.0	Mukormykose der Lunge	2	2
B46.1	Rhinozerebrale Mukormykose	2	2
B46.2	Mukormykose des Magen-Darm-Trakts	2	2
B46.3	Mukormykose der Haut	2	2
B46.4	Disseminierte Mukormykose	2	2
B46.5	Mukormykose, nicht näher bezeichnet	2	2
B46.8	Sonstige Formen der Zygomykose	2	2
B46.9	Zygomykose, nicht näher bezeichnet	2	2
B47.0	Eumyzetom	3, 4	3
B47.1	Aktinomyzetom	3, 4	3
B48.2	Allescheriose	2	2
B48.5	Pneumozystose {J17.2}	3, 4	3
B48.7	Mykosen durch opportunistisch-pathogene Pilze	3, 4	3
B57.0	Akute Chagas-Krankheit mit Herzbeteiligung {I41.2}, {I98.1}	1, 2, 3	1, 2
B57.2	Chagas-Krankheit (chronisch) mit Herzbeteiligung	1, 2, 3	1, 2
B58.0	Augenerkrankung durch Toxoplasmen	1	1
B58.1	Hepatitis durch Toxoplasmen {K77.0}	1	1
B58.2	Meningoenzephalitis durch Toxoplasmen {G05.2}	3, 4	3
B58.3	Toxoplasmose der Lunge {J17.3}	1	1
B58.8	Toxoplasmosen mit Beteiligung sonstiger Organe	1	1
B60.0	Babesiose	2	2
B60.1	Akanthamöbiasis	2	2
B60.2	Naegleriainfektion	2	2
B60.8	Sonstige näher bezeichnete Protozoenkrankheiten	2	2
B78.0	Strongyloidiasis des Darmes	2	2
B78.1	Strongyloidiasis der Haut	2	2
B78.7	Disseminierte Strongyloidiasis	2	2
B78.9	Strongyloidiasis, nicht näher bezeichnet	2	2
B79	Trichuriasis	2	2
B90.0	Folgezustände einer Tuberkulose des Zentralnervensystems	1, 2	2
B90.1	Folgezustände einer Tuberkulose des Urogenitalsystems	1, 2	2
B90.2	Folgezustände einer Tuberkulose der Knochen und der Gelenke	2	2
B90.8	Folgezustände einer Tuberkulose sonstiger Organe	2	2
B90.9	Folgezustände einer Tuberkulose der Atmungsorgane und einer nicht näher bezeichneten Tuberkulose	2	2
B91	Folgezustände der Poliomyelitis	1, 2	2
B95.1	Streptokokken, Gruppe B, als Ursache von Krankheiten, die in anderen Kapiteln klassifiziert sind	2	2
B95.2	Streptokokken, Gruppe D, und Enterokokken als Ursache von Krankheiten, die in anderen Kapiteln klassifiziert sind	1, 2	1, 2
B95.3	Streptococcus pneumoniae als Ursache von Krankheiten, die in anderen Kapiteln klassifiziert sind	1, 2	1, 2
B95.42	Streptokokken, Gruppe G, als Ursache von Krankheiten, die in anderen Kapiteln klassifiziert sind	1, 2	1, 2
B95.48	Sonstige näher bezeichnete Streptokokken als Ursache von Krankheiten, die in anderen Kapiteln klassifiziert sind	1, 2	1, 2
B95.6	Staphylococcus aureus als Ursache von Krankheiten, die in anderen Kapiteln klassifiziert sind	1, 2	1, 2
B95.7	Sonstige Staphylokokken als Ursache von Krankheiten, die in anderen Kapiteln klassifiziert sind	1, 2	1, 2
B96.2	Escherichia coli [E. coli] und andere Enterobacterales als Ursache von Krankheiten, die in anderen Kapiteln klassifiziert sind	3, 4	1, 3
B96.3	Haemophilus und Moraxella als Ursache von Krankheiten, die in anderen Kapiteln klassifiziert sind	3, 4	1, 3
B96.5	Pseudomonas und andere Nonfermenter als Ursache von Krankheiten, die in anderen Kapiteln klassifiziert sind	3, 4	1, 3

ICD	Beschreibung	OP CCL	Med. CCL
B96.6	Bacteroides fragilis [B. fragilis] und andere gramnegative Anaerobier als Ursache von Krankheiten, die in anderen Kapiteln klassifiziert sind	1	1
B96.7	Clostridium perfringens [C. perfringens] und andere grampositive, sporenbildende Anaerobier als Ursache von Krankheiten, die in anderen Kapiteln klassifiziert sind	2, 3	2
C15.0	Bösartige Neubildung: Zervikaler Ösophagus	1, 2, 3	1, 2
C15.1	Bösartige Neubildung: Thorakaler Ösophagus	1, 2, 3	1, 2
C15.2	Bösartige Neubildung: Abdominaler Ösophagus	1, 2, 3	1, 2
C15.3	Bösartige Neubildung: Ösophagus, oberes Drittel	1, 2, 3	1, 2
C15.4	Bösartige Neubildung: Ösophagus, mittleres Drittel	1, 2, 3	1, 2
C15.5	Bösartige Neubildung: Ösophagus, unteres Drittel	1, 2, 3	1, 2
C15.8	Bösartige Neubildung: Ösophagus, mehrere Teilbereiche überlappend	1, 2, 3	1, 2
C15.9	Bösartige Neubildung: Ösophagus, nicht näher bezeichnet	1, 2, 3	1, 2
C16.0	Bösartige Neubildung: Kardia	1, 2, 3	1, 2
C16.1	Bösartige Neubildung: Fundus ventriculi	1, 2, 3	1, 2
C16.2	Bösartige Neubildung: Corpus ventriculi	1, 2, 3	1, 2
C16.3	Bösartige Neubildung: Antrum pyloricum	1, 2, 3	1, 2
C16.4	Bösartige Neubildung: Pylorus	1, 2, 3	1, 2
C16.5	Bösartige Neubildung: Kleine Kurvatur des Magens, nicht näher bezeichnet	1, 2, 3	1, 2
C16.6	Bösartige Neubildung: Große Kurvatur des Magens, nicht näher bezeichnet	1, 2, 3	1, 2
C16.8	Bösartige Neubildung: Magen, mehrere Teilbereiche überlappend	1, 2, 3	1, 2
C16.9	Bösartige Neubildung: Magen, nicht näher bezeichnet	1, 2, 3	1, 2
C17.0	Bösartige Neubildung: Duodenum	1, 2, 3	1, 2
C17.1	Bösartige Neubildung: Jejunum	1, 2, 3	1, 2
C17.2	Bösartige Neubildung: Ileum	1, 2, 3	1, 2
C17.3	Bösartige Neubildung: Meckel-Divertikel	1, 2, 3	1, 2
C17.8	Bösartige Neubildung: Dünndarm, mehrere Teilbereiche überlappend	1, 2, 3	1, 2
C17.9	Bösartige Neubildung: Dünndarm, nicht näher bezeichnet	1, 2, 3	1, 2
C18.0	Bösartige Neubildung: Zäkum	1, 2, 3	1, 2
C18.1	Bösartige Neubildung: Appendix vermiformis	1, 2, 3	1, 2
C18.2	Bösartige Neubildung: Colon ascendens	1, 2, 3	1, 2
C18.3	Bösartige Neubildung: Flexura coli dextra [hepatica]	1, 2, 3	1, 2
C18.4	Bösartige Neubildung: Colon transversum	1, 2, 3	1, 2
C18.5	Bösartige Neubildung: Flexura coli sinistra [lienalis]	1, 2, 3	1, 2
C18.6	Bösartige Neubildung: Colon descendens	1, 2, 3	1, 2
C18.7	Bösartige Neubildung: Colon sigmoideum	1, 2, 3	1, 2
C18.8	Bösartige Neubildung: Kolon, mehrere Teilbereiche überlappend	1, 2, 3	1, 2
C18.9	Bösartige Neubildung: Kolon, nicht näher bezeichnet	1, 2, 3	1, 2
C19	Bösartige Neubildung am Rektosigmoid, Übergang	1, 2, 3	1, 2
C20	Bösartige Neubildung des Rektums	1, 2, 3	1, 2
C21.0	Bösartige Neubildung: Anus, nicht näher bezeichnet	1, 2, 3	1, 2
C21.1	Bösartige Neubildung: Analkanal	1, 2, 3	1, 2
C21.2	Bösartige Neubildung: Kloakenregion	1, 2, 3	1, 2
C21.8	Bösartige Neubildung: Rektum, Anus und Analkanal, mehrere Teilbereiche überlappend	1, 2, 3	1, 2
C22.0	Leberzellkarzinom	1, 2, 3, 4	1, 2
C33	Bösartige Neubildung der Trachea	1, 2	1, 2
C34.0	Bösartige Neubildung: Hauptbronchus	1, 2	1, 2
C34.1	Bösartige Neubildung: Oberlappen (-Bronchus)	1, 2	1, 2
C34.2	Bösartige Neubildung: Mittellappen (-Bronchus)	1, 2	1, 2
C34.3	Bösartige Neubildung: Unterlappen (-Bronchus)	1, 2	1, 2
C34.8	Bösartige Neubildung: Bronchus und Lunge, mehrere Teilbereiche überlappend	1, 2	1, 2
C34.9	Bösartige Neubildung: Bronchus oder Lunge, nicht näher bezeichnet	1, 2	1, 2
C37	Bösartige Neubildung des Thymus	1, 2, 3, 4	1, 2
C38.0	Bösartige Neubildung: Herz	1, 2, 3	1, 2
C38.1	Bösartige Neubildung: Vorderes Mediastinum	1, 2, 3, 4	1, 2
C38.2	Bösartige Neubildung: Hinteres Mediastinum	1, 2, 3, 4	1, 2
C38.3	Bösartige Neubildung: Mediastinum, Teil nicht näher bezeichnet	1, 2, 3, 4	1, 2
C38.4	Bösartige Neubildung: Pleura	1, 2, 3, 4	1, 2
C38.8	Bösartige Neubildung: Herz, Mediastinum und Pleura, mehrere Teilbereiche überlappend	1, 2, 3, 4	1, 2
C40.0	Bösartige Neubildung des Knochens und des Gelenkknorpels: Skapula und lange Knochen der oberen Extremität	1, 2, 3	1, 2, 3
C40.1	Bösartige Neubildung des Knochens und des Gelenkknorpels: Kurze Knochen der oberen Extremität	1, 2, 3	1, 2, 3
C40.2	Bösartige Neubildung des Knochens und des Gelenkknorpels: Lange Knochen der unteren Extremität	1, 2, 3	1, 2, 3

ICD	Beschreibung	OP CCL	Med. CCL
C40.3	Bösartige Neubildung des Knochens und des Gelenkknorpels: Kurze Knochen der unteren Extremität	1, 2, 3	1, 2, 3
C40.8	Bösartige Neubildung: Knochen und Gelenkknorpel der Extremitäten, mehrere Teilbereiche überlappend	1, 2, 3	1, 2, 3
C41.01	Bösartige Neubildung des Knochens und des Gelenkknorpels: Kraniofazial	1, 2, 3	1, 2, 3
C41.02	Bösartige Neubildung des Knochens und des Gelenkknorpels: Maxillofazial	1, 2, 3	1, 2, 3
C41.1	Bösartige Neubildung des Knochens und des Gelenkknorpels: Unterkieferknochen	1, 2, 3	1, 2, 3
C41.2	Bösartige Neubildung des Knochens und des Gelenkknorpels: Wirbelsäule	1, 2, 3	1, 2, 3
C41.30	Bösartige Neubildung des Knochens und des Gelenkknorpels: Rippen	1, 2, 3	1, 2, 3
C41.31	Bösartige Neubildung des Knochens und des Gelenkknorpels: Sternum	1, 2, 3	1, 2, 3
C41.32	Bösartige Neubildung des Knochens und des Gelenkknorpels: Klavikula	1, 2, 3	1, 2, 3
C41.4	Bösartige Neubildung des Knochens und des Gelenkknorpels: Beckenknochen	1, 2, 3	1, 2, 3
C41.8	Bösartige Neubildung: Knochen und Gelenkknorpel, mehrere Teilbereiche überlappend	1, 2, 3	1, 2, 3
C45.0	Mesotheliom der Pleura	1, 2, 3, 4	1, 2
C45.1	Mesotheliom des Peritoneums	1, 2, 3	1, 2
C45.2	Mesotheliom des Perikards	1, 2, 3	1, 2
C45.7	Mesotheliom sonstiger Lokalisationen	2, 3, 4	1, 2, 3
C45.9	Mesotheliom, nicht näher bezeichnet	2, 3, 4	1, 2, 3
C46.3	Kaposi-Sarkom der Lymphknoten	1, 2, 3	1, 2
C46.8	Kaposi-Sarkom mehrerer Organe	2	2
C64	Bösartige Neubildung der Niere, ausgenommen Nierenbecken	2	2
C65	Bösartige Neubildung des Nierenbeckens	2	2
C66	Bösartige Neubildung des Ureters	2	2
C70.0	Bösartige Neubildung: Hirnhäute	1, 2, 3	1, 2, 3
C70.1	Bösartige Neubildung: Rückenmarkhäute	1, 2, 3	1, 2, 3
C70.9	Bösartige Neubildung: Meningen, nicht näher bezeichnet	1, 2, 3	1, 2, 3
C71.0	Bösartige Neubildung: Zerebrum, ausgenommen Hirnlappen und Ventrikel	1, 2, 3	1, 2, 3
C71.1	Bösartige Neubildung: Frontallappen	1, 2, 3	1, 2, 3
C71.2	Bösartige Neubildung: Temporallappen	1, 2, 3	1, 2, 3
C71.3	Bösartige Neubildung: Parietallappen	1, 2, 3	1, 2, 3
C71.4	Bösartige Neubildung: Okzipitallappen	1, 2, 3	1, 2, 3
C71.5	Bösartige Neubildung: Hirnventrikel	1, 2, 3	1, 2, 3
C71.6	Bösartige Neubildung: Zerebellum	1, 2, 3	1, 2, 3
C71.7	Bösartige Neubildung: Hirnstamm	1, 2, 3	1, 2, 3
C71.8	Bösartige Neubildung: Gehirn, mehrere Teilbereiche überlappend	1, 2, 3	1, 2, 3
C71.9	Bösartige Neubildung: Gehirn, nicht näher bezeichnet	1, 2, 3	1, 2, 3
C72.0	Bösartige Neubildung: Rückenmark	1, 2, 3	1, 2, 3
C72.1	Bösartige Neubildung: Cauda equina	1, 2, 3	1, 2, 3
C72.2	Bösartige Neubildung: Nn. olfactorii [I. Hirnnerv]	1, 2, 3	1, 2, 3
C72.3	Bösartige Neubildung: N. opticus [II. Hirnnerv]	1, 2, 3	1, 2, 3
C72.4	Bösartige Neubildung: N. vestibulocochlearis [VIII. Hirnnerv]	1, 2, 3	1, 2, 3
C72.5	Bösartige Neubildung: Sonstige und nicht näher bezeichnete Hirnnerven	1, 2, 3	1, 2, 3
C72.8	Bösartige Neubildung: Gehirn und andere Teile des Zentralnervensystems, mehrere Teilbereiche überlappend	1, 2, 3	1, 2, 3
C77.0	Sekundäre und nicht näher bezeichnete bösartige Neubildung: Lymphknoten des Kopfes, des Gesichtes und des Halses	1, 2	1, 2
C77.1	Sekundäre und nicht näher bezeichnete bösartige Neubildung: Intrathorakale Lymphknoten	1, 2	1, 2
C77.2	Sekundäre und nicht näher bezeichnete bösartige Neubildung: Intraabdominale Lymphknoten	1, 2	1, 2
C77.3	Sekundäre und nicht näher bezeichnete bösartige Neubildung: Axilläre Lymphknoten und Lymphknoten der oberen Extremität	1, 2	1, 2
C77.4	Sekundäre und nicht näher bezeichnete bösartige Neubildung: Inguinale Lymphknoten und Lymphknoten der unteren Extremität	1, 2	1, 2
C77.5	Sekundäre und nicht näher bezeichnete bösartige Neubildung: Intrapelvine Lymphknoten	1, 2	1, 2
C77.8	Sekundäre und nicht näher bezeichnete bösartige Neubildung: Lymphknoten mehrerer Regionen	1, 2	1, 2
C78.0	Sekundäre bösartige Neubildung der Lunge	1	1
C78.1	Sekundäre bösartige Neubildung des Mediastinums	1	1
C78.2	Sekundäre bösartige Neubildung der Pleura	1	1

ICD	Beschreibung	OP CCL	Med. CCL
C78.3	Sekundäre bösartige Neubildung sonstiger und nicht näher bezeichneter Atmungsorgane	1	1
C78.4	Sekundäre bösartige Neubildung des Dünndarmes	1	1
C78.5	Sekundäre bösartige Neubildung des Dickdarmes und des Rektums	1	1
C78.6	Sekundäre bösartige Neubildung des Retroperitoneums und des Peritoneums	1	1
C78.7	Sekundäre bösartige Neubildung der Leber und der intrahepatischen Gallengänge	1, 2	1, 2
C78.8	Sekundäre bösartige Neubildung sonstiger und nicht näher bezeichneter Verdauungsorgane	1	1
C79.0	Sekundäre bösartige Neubildung der Niere und des Nierenbeckens	1	1
C79.1	Sekundäre bösartige Neubildung der Harnblase sowie sonstiger und nicht näher bezeichneter Harnorgane	1	1
C79.2	Sekundäre bösartige Neubildung der Haut	1	1
C79.3	Sekundäre bösartige Neubildung des Gehirns und der Hirnhäute	1, 2, 3	1, 2, 3
C79.4	Sekundäre bösartige Neubildung sonstiger und nicht näher bezeichneter Teile des Nervensystems	1	1
C79.5	Sekundäre bösartige Neubildung des Knochens und des Knochenmarkes	1	1
C79.6	Sekundäre bösartige Neubildung des Ovars	3, 4	3
C79.7	Sekundäre bösartige Neubildung der Nebenniere	1	1
C79.81	Sekundäre bösartige Neubildung der Brustdrüse	1	1
C79.82	Sekundäre bösartige Neubildung der Genitalorgane	1	1
C81.0	Noduläres lymphozytenprädominantes Hodgkin-Lymphom	1, 2, 3	1, 2
C81.1	Nodulär-sklerosierendes (klassisches) Hodgkin-Lymphom	1, 2, 3	1, 2
C81.2	Gemischtzelliges (klassisches) Hodgkin-Lymphom	1, 2, 3	1, 2
C81.3	Lymphozytenarmes (klassisches) Hodgkin-Lymphom	1, 2, 3	1, 2
C81.4	Lymphozytenreiches (klassisches) Hodgkin-Lymphom	1, 2, 3	1, 2
C81.7	Sonstige Typen des (klassischen) Hodgkin-Lymphoms	1, 2, 3	1, 2
C81.9	Hodgkin-Lymphom, nicht näher bezeichnet	1, 2, 3	1, 2
C82.0	Follikuläres Lymphom Grad I	1, 2, 3	1, 2
C82.1	Follikuläres Lymphom Grad II	1, 2, 3	1, 2
C82.2	Follikuläres Lymphom Grad III, nicht näher bezeichnet	1, 2, 3	1, 2
C82.3	Follikuläres Lymphom Grad IIIa	1, 2, 3	1, 2
C82.4	Follikuläres Lymphom Grad IIIb	1, 2, 3	1, 2
C82.5	Diffuses Follikelzentrumslymphom	1, 2, 3	1, 2
C82.6	Kutanes Follikelzentrumslymphom	1, 2, 3	1, 2
C82.7	Sonstige Typen des follikulären Lymphoms	1, 2, 3	1, 2
C82.9	Follikuläres Lymphom, nicht näher bezeichnet	1, 2, 3	1, 2
C83.0	Kleinzelliges B-Zell-Lymphom	1, 2, 3	1, 2
C83.1	Mantelzell-Lymphom	1, 2, 3	1, 2
C83.3	Diffuses großzelliges B-Zell-Lymphom	1, 2, 3	1, 2
C83.5	Lymphoblastisches Lymphom	1, 2, 3	1, 2
C83.7	Burkitt-Lymphom	1, 2, 3	1, 2
C83.8	Sonstige nicht follikuläre Lymphome	1, 2, 3	1, 2
C83.9	Nicht follikuläres Lymphom, nicht näher bezeichnet	1, 2, 3	1, 2
C84.0	Mycosis fungoides	1, 2, 3	1, 2
C84.1	Sézary-Syndrom	1, 2, 3	1, 2
C84.4	Peripheres T-Zell-Lymphom, nicht spezifiziert	1, 2, 3	1, 2
C84.5	Sonstige reifzellige T/NK-Zell-Lymphome	1, 2, 3	1, 2
C84.6	Anaplastisches großzelliges Lymphom, ALK-positiv	1, 2, 3	1, 2
C84.7	Anaplastisches großzelliges Lymphom, ALK-negativ	1, 2, 3	1, 2
C84.8	Kutanes T-Zell-Lymphom, nicht näher bezeichnet	1, 2, 3	1, 2
C84.9	Reifzelliges T/NK-Zell-Lymphom, nicht näher bezeichnet	1, 2, 3	1, 2
C85.1	B-Zell-Lymphom, nicht näher bezeichnet	1, 2, 3	1, 2
C85.2	Mediastinales (thymisches) großzelliges B-Zell-Lymphom	1, 2, 3	1, 2
C85.7	Sonstige näher bezeichnete Typen des Non-Hodgkin-Lymphoms	1, 2, 3	1, 2
C85.9	Non-Hodgkin-Lymphom, nicht näher bezeichnet	1, 2, 3	1, 2
C86.0	Extranodales NK/T-Zell-Lymphom, nasaler Typ	1, 2, 3	1, 2
C86.1	Hepatosplenisches T-Zell-Lymphom	1, 2, 3	1, 2
C86.2	T-Zell-Lymphom vom Enteropathie-Typ	1, 2, 3	1, 2
C86.3	Subkutanes pannikulitisches T-Zell-Lymphom	1, 2, 3	1, 2
C86.4	Blastisches NK-Zell-Lymphom	1, 2, 3	1, 2
C86.5	Angioimmunoblastisches T-Zell-Lymphom	1, 2, 3	1, 2
C86.6	Primäre kutane CD30-positive T-Zell-Proliferationen	1, 2, 3	1, 2
C88.00	Makroglobulinämie Waldenström: Ohne Angabe einer kompletten Remission	1, 2, 3	1, 2
C88.01	Makroglobulinämie Waldenström: In kompletter Remission	1, 2, 3	1, 2
C88.30	Immunproliferative Dünndarmkrankheit: Ohne Angabe einer kompletten Remission	1, 2, 3	1, 2
C88.31	Immunproliferative Dünndarmkrankheit: In kompletter Remission	1, 2, 3	1, 2
C88.40	Extranodales Marginalzonen-B-Zell-Lymphom des Mukosa-assoziierten lymphatischen Gewebes [MALT-Lymphom]: Ohne Angabe einer kompletten Remission	1, 2, 3	1, 2

ICD	Beschreibung	OP CCL	Med. CCL
C88.41	Extranodales Marginalzonen-B-Zell-Lymphom des Mukosa-assoziierten lymphatischen Gewebes [MALT-Lymphom]: In kompletter Remission	1, 2, 3	1, 2
C88.70	Sonstige bösartige immunproliferative Krankheiten: Ohne Angabe einer kompletten Remission	1, 2, 3	1, 2
C88.71	Sonstige bösartige immunproliferative Krankheiten: In kompletter Remission	1, 2, 3	1, 2
C88.90	Bösartige immunproliferative Krankheit, nicht näher bezeichnet: Ohne Angabe einer kompletten Remission	1, 2, 3	1, 2
C88.91	Bösartige immunproliferative Krankheit, nicht näher bezeichnet: In kompletter Remission	1, 2, 3	1, 2
C90.00	Multiples Myelom: Ohne Angabe einer kompletten Remission	1, 2, 3	1, 2
C90.01	Multiples Myelom: In kompletter Remission	1, 2, 3	1, 2
C90.10	Plasmazellenleukämie: Ohne Angabe einer kompletten Remission	1, 2, 3	1, 2
C90.11	Plasmazellenleukämie: In kompletter Remission	1, 2, 3	1, 2
C90.20	Extramedulläres Plasmozytom: Ohne Angabe einer kompletten Remission	1, 2, 3	1, 2
C90.21	Extramedulläres Plasmozytom: In kompletter Remission	1, 2, 3	1, 2
C90.30	Solitäres Plasmozytom: Ohne Angabe einer kompletten Remission	1, 2, 3	1, 2
C90.31	Solitäres Plasmozytom: In kompletter Remission	1, 2, 3	1, 2
C91.00	Akute lymphatische Leukämie [ALL]: Ohne Angabe einer kompletten Remission	1, 2, 3, 4	1, 2, 3
C91.01	Akute lymphatische Leukämie [ALL]: In kompletter Remission	1, 2, 3, 4	1, 2, 3
C91.10	Chronische lymphatische Leukämie vom B-Zell-Typ [CLL]: Ohne Angabe einer kompletten Remission	1, 2, 3	1, 2
C91.11	Chronische lymphatische Leukämie vom B-Zell-Typ [CLL]: In kompletter Remission	1, 2, 3	1, 2
C91.30	Prolymphozytäre Leukämie vom B-Zell-Typ: Ohne Angabe einer kompletten Remission	1, 2, 3	1, 2
C91.31	Prolymphozytäre Leukämie vom B-Zell-Typ: In kompletter Remission	1, 2, 3	1, 2
C91.40	Haarzellenleukämie: Ohne Angabe einer kompletten Remission	1, 2, 3	1, 2
C91.41	Haarzellenleukämie: In kompletter Remission	1, 2, 3	1, 2
C91.50	Adulte(s) T-Zell-Lymphom/Leukämie (HTLV-1-assoziiert): Ohne Angabe einer kompletten Remission	1, 2, 3	1, 2
C91.51	Adulte(s) T-Zell-Lymphom/Leukämie (HTLV-1-assoziiert): In kompletter Remission	1, 2, 3	1, 2
C91.60	Prolymphozyten-Leukämie vom T-Zell-Typ: Ohne Angabe einer kompletten Remission	1, 2, 3	1, 2
C91.61	Prolymphozyten-Leukämie vom T-Zell-Typ: In kompletter Remission	1, 2, 3	1, 2
C91.70	Sonstige lymphatische Leukämie: Ohne Angabe einer kompletten Remission	1, 2, 3	1, 2
C91.71	Sonstige lymphatische Leukämie: In kompletter Remission	1, 2, 3	1, 2
C91.80	Reifzellige B-ALL vom Burkitt-Typ: Ohne Angabe einer kompletten Remission	1, 2, 3, 4	1, 2, 3
C91.81	Reifzellige B-ALL vom Burkitt-Typ: In kompletter Remission	1, 2, 3, 4	1, 2, 3
C91.90	Lymphatische Leukämie, nicht näher bezeichnet: Ohne Angabe einer kompletten Remission	1, 2, 3	1, 2
C91.91	Lymphatische Leukämie, nicht näher bezeichnet: In kompletter Remission	1, 2, 3	1, 2
C92.00	Akute myeloblastische Leukämie [AML]: Ohne Angabe einer kompletten Remission	1, 2, 3, 4	1, 2, 3
C92.01	Akute myeloblastische Leukämie [AML]: In kompletter Remission	1, 2	1
C92.10	Chronische myeloische Leukämie [CML], BCR/ABL-positiv: Ohne Angabe einer kompletten Remission	1, 2, 3	1, 2
C92.11	Chronische myeloische Leukämie [CML], BCR/ABL-positiv: In kompletter Remission	1, 2, 3	1, 2
C92.20	Atypische chronische myeloische Leukämie, BCR/ABL-negativ: Ohne Angabe einer kompletten Remission	1, 2, 3	1, 2
C92.21	Atypische chronische myeloische Leukämie, BCR/ABL-negativ: In kompletter Remission	1, 2, 3	1, 2
C92.30	Myelosarkom: Ohne Angabe einer kompletten Remission	1, 2, 3	1, 2
C92.31	Myelosarkom: In kompletter Remission	1, 2, 3	1, 2
C92.40	Akute Promyelozyten-Leukämie [PCL]: Ohne Angabe einer kompletten Remission	1, 2, 3, 4	1, 2, 3
C92.41	Akute Promyelozyten-Leukämie [PCL]: In kompletter Remission	1, 2, 3, 4	1, 2, 3
C92.50	Akute myelomonozytäre Leukämie: Ohne Angabe einer kompletten Remission	1, 2, 3, 4	1, 2, 3
C92.51	Akute myelomonozytäre Leukämie: In kompletter Remission	1, 2, 3, 4	1, 2, 3
C92.60	Akute myeloische Leukämie mit 11q23-Abnormität: Ohne Angabe einer kompletten Remission	1, 2, 3, 4	1, 2, 3
C92.61	Akute myeloische Leukämie mit 11q23-Abnormität: In kompletter Remission	1, 2, 3, 4	1, 2, 3

ICD	Beschreibung	OP CCL	Med. CCL
C92.70	Sonstige myeloische Leukämie: Ohne Angabe einer kompletten Remission	1, 2, 3	1, 2
C92.71	Sonstige myeloische Leukämie: In kompletter Remission	1, 2, 3	1, 2
C92.80	Akute myeloische Leukämie mit multilineärer Dysplasie: Ohne Angabe einer kompletten Remission	1, 2, 3, 4	1, 2, 3
C92.81	Akute myeloische Leukämie mit multilineärer Dysplasie: In kompletter Remission	1, 2, 3, 4	1, 2, 3
C92.90	Myeloische Leukämie, nicht näher bezeichnet: Ohne Angabe einer kompletten Remission	1, 2, 3	1, 2
C92.91	Myeloische Leukämie, nicht näher bezeichnet: In kompletter Remission	1, 2, 3	1, 2
C93.00	Akute Monoblasten-/Monozytenleukämie: Ohne Angabe einer kompletten Remission	1, 2, 3, 4	1, 2, 3
C93.01	Akute Monoblasten-/Monozytenleukämie: In kompletter Remission	1, 2, 3, 4	1, 2, 3
C93.10	Chronische myelomonozytäre Leukämie: Ohne Angabe einer kompletten Remission	1, 2, 3	1, 2
C93.11	Chronische myelomonozytäre Leukämie: In kompletter Remission	1, 2, 3	1, 2
C93.30	Juvenile myelomonozytäre Leukämie: Ohne Angabe einer kompletten Remission	1, 2, 3	1, 2
C93.31	Juvenile myelomonozytäre Leukämie: In kompletter Remission	1, 2, 3	1, 2
C93.70	Sonstige Monozytenleukämie: Ohne Angabe einer kompletten Remission	1, 2, 3	1, 2
C93.71	Sonstige Monozytenleukämie: In kompletter Remission	1, 2, 3	1, 2
C93.90	Monozytenleukämie, nicht näher bezeichnet: Ohne Angabe einer kompletten Remission	1, 2, 3	1, 2
C93.91	Monozytenleukämie, nicht näher bezeichnet: In kompletter Remission	1, 2, 3	1, 2
C94.00	Akute Erythroleukämie: Ohne Angabe einer kompletten Remission	1, 2, 3, 4	1, 2, 3
C94.01	Akute Erythroleukämie: In kompletter Remission	1, 2, 3, 4	1, 2, 3
C94.20	Akute Megakaryoblastenleukämie: Ohne Angabe einer kompletten Remission	1, 2, 3	1, 2
C94.21	Akute Megakaryoblastenleukämie: In kompletter Remission	1, 2, 3	1, 2
C94.30	Mastzellenleukämie: Ohne Angabe einer kompletten Remission	1, 2, 3	1, 2
C94.31	Mastzellenleukämie: In kompletter Remission	1, 2, 3	1, 2
C94.40	Akute Panmyelose mit Myelofibrose: Ohne Angabe einer kompletten Remission	1, 2, 3	1, 2
C94.41	Akute Panmyelose mit Myelofibrose: In kompletter Remission	1, 2, 3	1, 2
C94.70	Sonstige näher bezeichnete Leukämien: Ohne Angabe einer kompletten Remission	1, 2, 3	1, 2
C94.71	Sonstige näher bezeichnete Leukämien: In kompletter Remission	1, 2, 3	1, 2
C95.00	Akute Leukämie nicht näher bezeichneten Zelltyps: Ohne Angabe einer kompletten Remission	1, 2, 3, 4	1, 2, 3
C95.01	Akute Leukämie nicht näher bezeichneten Zelltyps: In kompletter Remission	1, 2, 3, 4	1, 2, 3
C95.10	Chronische Leukämie nicht näher bezeichneten Zelltyps: Ohne Angabe einer kompletten Remission	1, 2, 3	1, 2
C95.11	Chronische Leukämie nicht näher bezeichneten Zelltyps: In kompletter Remission	1, 2, 3	1, 2
C95.70	Sonstige Leukämie nicht näher bezeichneten Zelltyps: Ohne Angabe einer kompletten Remission	1, 2, 3	1, 2
C95.71	Sonstige Leukämie nicht näher bezeichneten Zelltyps: In kompletter Remission	1, 2, 3	1, 2
C95.90	Leukämie, nicht näher bezeichnet: Ohne Angabe einer kompletten Remission	1, 2, 3	1, 2
C95.91	Leukämie, nicht näher bezeichnet: In kompletter Remission	1, 2, 3	1, 2
C96.0	Multifokale und multisystemische (disseminierte) Langerhans-Zell-Histiozytose [Abt-Letterer-Siwe-Krankheit]	1, 2, 3, 4	1, 2
C96.2	Bösartiger Mastzelltumor	1, 2, 3	1, 2
C96.4	Sarkom der dendritischen Zellen (akzessorische Zellen)	1, 2, 3	1, 2
C96.7	Sonstige näher bezeichnete bösartige Neubildungen des lymphatischen, blutbildenden und verwandten Gewebes	1, 2, 3	1, 2
C96.8	Histiozytisches Sarkom	1, 2, 3	1, 2
C96.9	Bösartige Neubildung des lymphatischen, blutbildenden und verwandten Gewebes, nicht näher bezeichnet	1, 2, 3	1, 2
D44.8	Neubildung unsicheren oder unbekannten Verhaltens: Beteiligung mehrerer endokriner Drüsen	2	1, 2
D53.1	Sonstige megaloblastäre Anämien, anderenorts nicht klassifiziert	1	1
D53.2	Skorbutanämie	1	1
D56.0	Alpha-Thalassämie	2, 3	1, 2, 3
D56.1	Beta-Thalassämie	2, 3	1, 2, 3
D56.2	Delta-Beta-Thalassämie	2, 3	1, 2, 3
D56.3	Thalassämie-Erbanlage	2, 3	1, 2, 3
D56.4	Hereditäre Persistenz fetalen Hämoglobins [HPFH]	2, 3	1, 2, 3
D56.8	Sonstige Thalassämien	2, 3	1, 2, 3
D56.9	Thalassämie, nicht näher bezeichnet	2, 3	1, 2, 3
D57.0	Sichelzellenanämie mit Krisen	2, 3	1, 2, 3

ICD	Beschreibung	OP CCL	Med. CCL
D57.1	Sichelzellenanämie ohne Krisen	2, 3	1, 2, 3
D57.2	Doppelt heterozygote Sichelzellenkrankheiten	2, 3	1, 2, 3
D57.8	Sonstige Sichelzellenkrankheiten	2, 3	1, 2, 3
D58.9	Hereditäre hämolytische Anämie, nicht näher bezeichnet	2, 3	1, 2, 3
D59.0	Arzneimittelinduzierte autoimmunhämolytische Anämie	2, 3	1, 2, 3
D59.1	Sonstige autoimmunhämolytische Anämien	2, 3	1, 2, 3
D59.2	Arzneimittelinduzierte nicht autoimmunhämolytische Anämie	2, 3	1, 2, 3
D59.3	Hämolytisch-urämisches Syndrom	2, 3	1, 2, 3
D59.4	Sonstige nicht autoimmunhämolytische Anämien	2, 3	1, 2, 3
D59.5	Paroxysmale nächtliche Hämoglobinurie [Marchiafava-Micheli]	2, 3	1, 2, 3
D59.6	Hämoglobinurie durch Hämolyse infolge sonstiger äußerer Ursachen	2, 3	1, 2, 3
D59.8	Sonstige erworbene hämolytische Anämien	2, 3	1, 2, 3
D59.9	Erworbene hämolytische Anämie, nicht näher bezeichnet	2, 3	1, 2, 3
D60.0	Chronische erworbene isolierte aplastische Anämie	2, 3	1, 2, 3
D60.1	Transitorische erworbene isolierte aplastische Anämie	2, 3	1, 2, 3
D60.8	Sonstige erworbene isolierte aplastische Anämien	2, 3	1, 2, 3
D60.9	Erworbene isolierte aplastische Anämie, nicht näher bezeichnet	2, 3	1, 2, 3
D61.0	Angeborene aplastische Anämie	2, 3	1, 2, 3
D61.10	Aplastische Anämie infolge zytostatischer Therapie	2, 3	1, 2, 3
D61.18	Sonstige arzneimittelinduzierte aplastische Anämie	2, 3	1, 2, 3
D61.19	Arzneimittelinduzierte aplastische Anämie, nicht näher bezeichnet	2, 3	1, 2, 3
D61.2	Aplastische Anämie infolge sonstiger äußerer Ursachen	2, 3	1, 2, 3
D61.3	Idiopathische aplastische Anämie	2, 3	1, 2, 3
D61.8	Sonstige näher bezeichnete aplastische Anämien	2, 3	1, 2, 3
D61.9	Aplastische Anämie, nicht näher bezeichnet	2, 3	1, 2, 3
D62	Akute Blutungsanämie	1, 2, 3	2, 3
D63.0	Anämie bei Neubildungen {C00-D48}	1, 2, 3, 4	1, 2
D64.0	Hereditäre sideroachrestische [sideroblastische] Anämie	3, 4	3
D64.1	Sekundäre sideroachrestische [sideroblastische] Anämie (krankheitsbedingt)	3, 4	3
D64.2	Sekundäre sideroachrestische [sideroblastische] Anämie durch Arzneimittel oder Toxine	3, 4	3
D64.3	Sonstige sideroachrestische [sideroblastische] Anämien	3, 4	3
D64.4	Kongenitale dyserythropoetische Anämie	3, 4	3
D65.0	Erworbene Afibrinogenämie	2, 3	1, 2, 3
D65.1	Disseminierte intravasale Gerinnung [DIG, DIC]	2, 3	1, 2, 3
D65.2	Erworbene Fibrinolyseblutung	2, 3	1, 2, 3
D66	Hereditärer Faktor-VIII-Mangel	3	3
D67	Hereditärer Faktor-IX-Mangel	3	3
D68.00	Hereditäres Willebrand-Jürgens-Syndrom	3	3
D68.01	Erworbenes Willebrand-Jürgens-Syndrom	3	3
D68.09	Willebrand-Jürgens-Syndrom, nicht näher bezeichnet	2, 3	1, 2, 3
D68.1	Hereditärer Faktor-XI-Mangel	3	3
D68.20	Hereditärer Faktor-I-Mangel	3	3
D68.21	Hereditärer Faktor-II-Mangel	3	3
D68.22	Hereditärer Faktor-V-Mangel	3	3
D68.23	Hereditärer Faktor-VII-Mangel	3	3
D68.24	Hereditärer Faktor-X-Mangel	3	3
D68.25	Hereditärer Faktor-XII-Mangel	3	3
D68.26	Hereditärer Faktor-XIII-Mangel	3	3
D68.28	Hereditärer Mangel an sonstigen Gerinnungsfaktoren	3	3
D68.31	Hämorrhagische Diathese durch Vermehrung von Antikörpern gegen Faktor VIII	2, 3	1, 2, 3
D68.32	Hämorrhagische Diathese durch Vermehrung von Antikörpern gegen sonstige Gerinnungsfaktoren	2, 3	1, 2, 3
D68.33	Hämorrhagische Diathese durch Cumarine (Vitamin-K-Antagonisten)	2, 3	1, 2, 3
D68.34	Hämorrhagische Diathese durch Heparine	2, 3	1, 2, 3
D68.35	Hämorrhagische Diathese durch sonstige Antikoagulanzien	2, 3	1, 2, 3
D68.4	Erworbener Mangel an Gerinnungsfaktoren	2, 3	1, 2, 3
D68.5	Primäre Thrombophilie	2, 3	1, 2, 3
D68.6	Sonstige Thrombophilien	2, 3	1, 2, 3
D68.8	Sonstige näher bezeichnete Koagulopathien	2, 3	1, 2, 3
D69.0	Purpura anaphylactoides	2, 3	1, 2, 3
D69.1	Qualitative Thrombozytendefekte	2, 3	1, 2, 3
D69.2	Sonstige nichtthrombozytopenische Purpura	2, 3	1, 2, 3
D69.3	Idiopathische thrombozytopenische Purpura	2, 3	1, 2, 3
D69.40	Sonstige primäre Thrombozytopenie, als transfusionsrefraktär bezeichnet	2, 3	1, 2, 3
D69.41	Sonstige primäre Thrombozytopenie, nicht als transfusionsrefraktär bezeichnet	1	1
D69.52	Heparin-induzierte Thrombozytopenie Typ I	2, 3	1, 2, 3
D69.53	Heparin-induzierte Thrombozytopenie Typ II	2, 3	1, 2, 3
D69.57	Sonstige sekundäre Thrombozytopenien, als transfusionsrefraktär bezeichnet	2, 3	1, 2, 3
D69.58	Sonstige sekundäre Thrombozytopenien, nicht als transfusionsrefraktär bezeichnet	2, 3	1, 2, 3
D69.59	Sekundäre Thrombozytopenie, nicht näher bezeichnet	2, 3	1, 2, 3
D69.60	Thrombozytopenie, nicht näher bezeichnet, als transfusionsrefraktär bezeichnet	2, 3	1, 2, 3

ICD	Beschreibung	OP CCL	Med. CCL
D69.61	Thrombozytopenie, nicht näher bezeichnet, nicht als transfusionsrefraktär bezeichnet	2	
D69.80	Hämorrhagische Diathese durch Thrombozytenaggregationshemmer	2, 3	1, 2, 3
D69.88	Sonstige näher bezeichnete hämorrhagische Diathesen	2, 3	1, 2, 3
D69.9	Hämorrhagische Diathese, nicht näher bezeichnet	2	
D70.0	Angeborene Agranulozytose und Neutropenie	3, 4	1, 2, 3
D70.10	Arzneimittelinduzierte Agranulozytose und Neutropenie: Kritische Phase unter 4 Tage	1	1
D70.11	Arzneimittelinduzierte Agranulozytose und Neutropenie: Kritische Phase 10 Tage bis unter 20 Tage	3, 4	1, 2, 3
D70.12	Arzneimittelinduzierte Agranulozytose und Neutropenie: Kritische Phase 20 Tage und mehr	3, 4	1, 2, 3
D70.13	Arzneimittelinduzierte Agranulozytose und Neutropenie: Kritische Phase 4 Tage bis unter 7 Tage	3, 4	1, 2, 3
D70.14	Arzneimittelinduzierte Agranulozytose und Neutropenie: Kritische Phase 7 Tage bis unter 10 Tage	3, 4	1, 2, 3
D70.18	Sonstige Verlaufsformen der arzneimittelinduzierten Agranulozytose und Neutropenie	1	1
D70.19	Arzneimittelinduzierte Agranulozytose und Neutropenie, nicht näher bezeichnet	1	1
D70.3	Sonstige Agranulozytose	1	1
D70.5	Zyklische Neutropenie	2, 3	1, 2
D70.6	Sonstige Neutropenie	2, 3	1, 2
D70.7	Neutropenie, nicht näher bezeichnet	1	1
D71	Funktionelle Störungen der neutrophilen Granulozyten	2, 3, 4	1, 2, 3
D73.1	Hypersplenismus	2	2
D73.3	Abszess der Milz	2	2
D73.5	Infarzierung der Milz	2	2
D76.4	Zytokinfreisetzungs-Syndrom [cytokine release syndrome]	3, 4	3
D80.0	Hereditäre Hypogammaglobulinämie	2, 3, 4	1, 2, 3
D80.3	Selektiver Mangel an Immunglobulin-G-Subklassen [IgG-Subklassen]	2, 3, 4	1, 2, 3
D80.4	Selektiver Immunglobulin-M-Mangel [IgM-Mangel]	2, 3, 4	1, 2, 3
D80.5	Immundefekt bei erhöhtem Immunglobulin M [IgM]	2, 3, 4	1, 2, 3
D80.6	Antikörpermangel bei Normo- oder Hypergammaglobulinämie	2, 3, 4	1, 2, 3
D80.7	Transitorische Hypogammaglobulinämie im Kindesalter	2, 3, 4	1, 2, 3
D80.8	Sonstige Immundefekte mit vorherrschendem Antikörpermangel	2, 3, 4	1, 2, 3
D80.9	Immundefekt mit vorherrschendem Antikörpermangel, nicht näher bezeichnet	2, 3, 4	1, 2, 3
D81.0	Schwerer kombinierter Immundefekt [SCID] mit retikulärer Dysgenesie	2, 3, 4	1, 2, 3
D81.1	Schwerer kombinierter Immundefekt [SCID] mit niedriger T- und B-Zellen-Zahl	2, 3, 4	1, 2, 3
D81.2	Schwerer kombinierter Immundefekt [SCID] mit niedriger oder normaler B-Zellen-Zahl	2, 3, 4	1, 2, 3
D81.4	Nezelof-Syndrom	2, 3, 4	1, 2, 3
D81.6	Haupthistokompatibilitäts-Komplex-Klasse-I-Defekt [MHC-Klasse-I-Defekt]	2, 3, 4	1, 2, 3
D81.7	Haupthistokompatibilitäts-Komplex-Klasse-II-Defekt [MHC-Klasse-II-Defekt]	2, 3, 4	1, 2, 3
D81.8	Sonstige kombinierte Immundefekte	2, 3, 4	1, 2, 3
D81.9	Kombinierter Immundefekt, nicht näher bezeichnet	2, 3, 4	1, 2, 3
D82.0	Wiskott-Aldrich-Syndrom	2, 3, 4	1, 2, 3
D82.1	Di-George-Syndrom	2, 3, 4	1, 2, 3
D82.2	Immundefekt mit disproportioniertem Kleinwuchs	2, 3, 4	1, 2, 3
D82.3	Immundefekt mit hereditär defekter Reaktion auf Epstein-Barr-Virus	2, 3, 4	1, 2, 3
D82.4	Hyperimmunglobulin-E[IgE]-Syndrom	2, 3, 4	1, 2, 3
D82.8	Immundefekte in Verbindung mit anderen näher bezeichneten schweren Defekten	2, 3, 4	1, 2, 3
D82.9	Immundefekt in Verbindung mit schwerem Defekt, nicht näher bezeichnet	2, 3, 4	1, 2, 3
D83.0	Variabler Immundefekt mit überwiegenden Abweichungen der B-Zellen-Zahl und -Funktion	2, 3, 4	1, 2, 3
D83.1	Variabler Immundefekt mit überwiegenden immunregulatorischen T-Zell-Störungen	2, 3, 4	1, 2, 3
D83.2	Variabler Immundefekt mit Autoantikörpern gegen B- oder T-Zellen	2, 3, 4	1, 2, 3
D83.8	Sonstige variable Immundefekte	2, 3, 4	1, 2, 3
D84.0	Lymphozytenfunktion-Antigen-1[LFA-1]-Defekt	2, 3, 4	1, 2, 3
D84.1	Defekte im Komplementsystem	2, 3, 4	1, 2, 3
D84.8	Sonstige näher bezeichnete Immundefekte	2, 3, 4	1, 2, 3
D86.0	Sarkoidose der Lunge	2	2
D86.1	Sarkoidose der Lymphknoten	2	2
D86.2	Sarkoidose der Lunge mit Sarkoidose der Lymphknoten	2	2
D86.3	Sarkoidose der Haut	2	2
D86.8	Sarkoidose an sonstigen und kombinierten Lokalisationen	2	2
D86.9	Sarkoidose, nicht näher bezeichnet	2	2
E03.5	Myxödemkoma	3, 4	3
E05.1	Hyperthyreose mit toxischem solitärem Schilddrüsenknoten	2	1, 2
E05.2	Hyperthyreose mit toxischer mehrknotiger Struma	2	1, 2

ICD	Beschreibung	OP CCL	Med. CCL
E05.3	Hyperthyreose durch ektopisches Schilddrüsengewebe	2	1, 2
E05.4	Hyperthyreosis factitia	2	1, 2
E05.5	Thyreotoxische Krise	2	1, 2
E10.01	Diabetes mellitus, Typ 1: Mit Koma: Als entgleist bezeichnet	2	2, 3
E10.11	Diabetes mellitus, Typ 1: Mit Ketoazidose: Als entgleist bezeichnet	2	2, 3
E10.20	Diabetes mellitus, Typ 1: Mit Nierenkomplikationen: Nicht als entgleist bezeichnet	2, 3, 4	1, 2
E10.21	Diabetes mellitus, Typ 1: Mit Nierenkomplikationen: Als entgleist bezeichnet	2, 3, 4	1, 2
E10.30	Diabetes mellitus, Typ 1: Mit Augenkomplikationen: Nicht als entgleist bezeichnet	2, 3, 4	1, 2
E10.31	Diabetes mellitus, Typ 1: Mit Augenkomplikationen: Als entgleist bezeichnet	2, 3, 4	1, 2
E10.40	Diabetes mellitus, Typ 1: Mit neurologischen Komplikationen: Nicht als entgleist bezeichnet	2	2
E10.41	Diabetes mellitus, Typ 1: Mit neurologischen Komplikationen: Als entgleist bezeichnet	2	2
E10.50	Diabetes mellitus, Typ 1: Mit peripheren vaskulären Komplikationen: Nicht als entgleist bezeichnet	1	1
E10.51	Diabetes mellitus, Typ 1: Mit peripheren vaskulären Komplikationen: Als entgleist bezeichnet	1	1
E10.60	Diabetes mellitus, Typ 1: Mit sonstigen näher bezeichneten Komplikationen: Nicht als entgleist bezeichnet	2	2, 3
E10.61	Diabetes mellitus, Typ 1: Mit sonstigen näher bezeichneten Komplikationen: Als entgleist bezeichnet	2	2, 3
E10.72	Diabetes mellitus, Typ 1: Mit multiplen Komplikationen: Mit sonstigen multiplen Komplikationen, nicht als entgleist bezeichnet	2	2, 3
E10.73	Diabetes mellitus, Typ 1: Mit multiplen Komplikationen: Mit sonstigen multiplen Komplikationen, als entgleist bezeichnet	2	2, 3
E10.74	Diabetes mellitus, Typ 1: Mit multiplen Komplikationen: Mit diabetischem Fußsyndrom, nicht als entgleist bezeichnet	2	2, 3
E10.75	Diabetes mellitus, Typ 1: Mit multiplen Komplikationen: Mit diabetischem Fußsyndrom, als entgleist bezeichnet	2	2, 3
E10.80	Diabetes mellitus, Typ 1: Mit nicht näher bezeichneten Komplikationen: Nicht als entgleist bezeichnet	2	2, 3
E10.81	Diabetes mellitus, Typ 1: Mit nicht näher bezeichneten Komplikationen: Als entgleist bezeichnet	2	2, 3
E10.90	Diabetes mellitus, Typ 1: Ohne Komplikationen: Nicht als entgleist bezeichnet	2	2, 3
E10.91	Diabetes mellitus, Typ 1: Ohne Komplikationen: Als entgleist bezeichnet	2	2, 3
E11.01	Diabetes mellitus, Typ 2: Mit Koma: Als entgleist bezeichnet	2	2, 3
E11.11	Diabetes mellitus, Typ 2: Mit Ketoazidose: Als entgleist bezeichnet	2	2, 3
E11.20	Diabetes mellitus, Typ 2: Mit Nierenkomplikationen: Nicht als entgleist bezeichnet	2, 3, 4	1, 2
E11.21	Diabetes mellitus, Typ 2: Mit Nierenkomplikationen: Als entgleist bezeichnet	2, 3, 4	1, 2
E11.30	Diabetes mellitus, Typ 2: Mit Augenkomplikationen: Nicht als entgleist bezeichnet	2, 3, 4	1, 2
E11.31	Diabetes mellitus, Typ 2: Mit Augenkomplikationen: Als entgleist bezeichnet	2, 3, 4	1, 2
E11.40	Diabetes mellitus, Typ 2: Mit neurologischen Komplikationen: Nicht als entgleist bezeichnet	2	2
E11.41	Diabetes mellitus, Typ 2: Mit neurologischen Komplikationen: Als entgleist bezeichnet	2	2
E11.50	Diabetes mellitus, Typ 2: Mit peripheren vaskulären Komplikationen: Nicht als entgleist bezeichnet	1	1
E11.51	Diabetes mellitus, Typ 2: Mit peripheren vaskulären Komplikationen: Als entgleist bezeichnet	1	1
E11.60	Diabetes mellitus, Typ 2: Mit sonstigen näher bezeichneten Komplikationen: Nicht als entgleist bezeichnet	2	2, 3
E11.61	Diabetes mellitus, Typ 2: Mit sonstigen näher bezeichneten Komplikationen: Als entgleist bezeichnet	2	2, 3
E11.72	Diabetes mellitus, Typ 2: Mit multiplen Komplikationen: Mit sonstigen multiplen Komplikationen, nicht als entgleist bezeichnet	2	2, 3
E11.73	Diabetes mellitus, Typ 2: Mit multiplen Komplikationen: Mit sonstigen multiplen Komplikationen, als entgleist bezeichnet	2	2, 3
E11.74	Diabetes mellitus, Typ 2: Mit multiplen Komplikationen: Mit diabetischem Fußsyndrom, nicht als entgleist bezeichnet	2	2, 3
E11.75	Diabetes mellitus, Typ 2: Mit multiplen Komplikationen: Mit diabetischem Fußsyndrom, als entgleist bezeichnet	2	2, 3
E11.80	Diabetes mellitus, Typ 2: Mit nicht näher bezeichneten Komplikationen: Nicht als entgleist bezeichnet	2	2, 3

ICD	Beschreibung	OP CCL	Med. CCL
E11.81	Diabetes mellitus, Typ 2: Mit nicht näher bezeichneten Komplikationen: Als entgleist bezeichnet	2	2, 3
E11.91	Diabetes mellitus, Typ 2: Ohne Komplikationen: Als entgleist bezeichnet	1, 2	1, 2
E13.01	Sonstiger näher bezeichneter Diabetes mellitus: Mit Koma: Als entgleist bezeichnet	2	2, 3
E13.11	Sonstiger näher bezeichneter Diabetes mellitus: Mit Ketoazidose: Als entgleist bezeichnet	2	2, 3
E13.20	Sonstiger näher bezeichneter Diabetes mellitus: Mit Nierenkomplikationen: Nicht als entgleist bezeichnet	2, 3, 4	1, 2
E13.21	Sonstiger näher bezeichneter Diabetes mellitus: Mit Nierenkomplikationen: Als entgleist bezeichnet	2, 3, 4	1, 2
E13.30	Sonstiger näher bezeichneter Diabetes mellitus: Mit Augenkomplikationen: Nicht als entgleist bezeichnet	2, 3, 4	1, 2
E13.31	Sonstiger näher bezeichneter Diabetes mellitus: Mit Augenkomplikationen: Als entgleist bezeichnet	2, 3, 4	1, 2
E13.40	Sonstiger näher bezeichneter Diabetes mellitus: Mit neurologischen Komplikationen: Nicht als entgleist bezeichnet	2	2
E13.41	Sonstiger näher bezeichneter Diabetes mellitus: Mit neurologischen Komplikationen: Als entgleist bezeichnet	2	2
E13.50	Sonstiger näher bezeichneter Diabetes mellitus: Mit peripheren vaskulären Komplikationen: Nicht als entgleist bezeichnet	1	1
E13.51	Sonstiger näher bezeichneter Diabetes mellitus: Mit peripheren vaskulären Komplikationen: Als entgleist bezeichnet	1	1
E13.60	Sonstiger näher bezeichneter Diabetes mellitus: Mit sonstigen näher bezeichneten Komplikationen: Nicht als entgleist bezeichnet	2	2, 3
E13.61	Sonstiger näher bezeichneter Diabetes mellitus: Mit sonstigen näher bezeichneten Komplikationen: Als entgleist bezeichnet	2	2, 3
E13.72	Sonstiger näher bezeichneter Diabetes mellitus: Mit multiplen Komplikationen: Mit sonstigen multiplen Komplikationen, nicht als entgleist bezeichnet	2	2, 3
E13.73	Sonstiger näher bezeichneter Diabetes mellitus: Mit multiplen Komplikationen: Mit sonstigen multiplen Komplikationen, als entgleist bezeichnet	2	2, 3
E13.74	Sonstiger näher bezeichneter Diabetes mellitus: Mit multiplen Komplikationen: Mit diabetischem Fußsyndrom, nicht als entgleist bezeichnet	2	2, 3
E13.75	Sonstiger näher bezeichneter Diabetes mellitus: Mit multiplen Komplikationen: Mit diabetischem Fußsyndrom, als entgleist bezeichnet	2	2, 3
E13.80	Sonstiger näher bezeichneter Diabetes mellitus: Mit nicht näher bezeichneten Komplikationen: Nicht als entgleist bezeichnet	2	2, 3
E13.81	Sonstiger näher bezeichneter Diabetes mellitus: Mit nicht näher bezeichneten Komplikationen: Als entgleist bezeichnet	2	2, 3
E13.90	Sonstiger näher bezeichneter Diabetes mellitus: Ohne Komplikationen: Nicht als entgleist bezeichnet	2	2, 3
E13.91	Sonstiger näher bezeichneter Diabetes mellitus: Ohne Komplikationen: Als entgleist bezeichnet	2	2, 3
E14.30	Nicht näher bezeichneter Diabetes mellitus: Mit Augenkomplikationen: Nicht als entgleist bezeichnet	1, 2, 3, 4	1, 2
E14.31	Nicht näher bezeichneter Diabetes mellitus: Mit Augenkomplikationen: Als entgleist bezeichnet	1, 2, 3, 4	1, 2
E14.60	Nicht näher bezeichneter Diabetes mellitus: Mit sonstigen näher bezeichneten Komplikationen: Nicht als entgleist bezeichnet	2	2, 3
E14.61	Nicht näher bezeichneter Diabetes mellitus: Mit sonstigen näher bezeichneten Komplikationen: Als entgleist bezeichnet	2	2, 3
E14.72	Nicht näher bezeichneter Diabetes mellitus: Mit multiplen Komplikationen: Mit sonstigen multiplen Komplikationen, nicht als entgleist bezeichnet	2	2, 3
E14.73	Nicht näher bezeichneter Diabetes mellitus: Mit multiplen Komplikationen: Mit sonstigen multiplen Komplikationen, als entgleist bezeichnet	2	2, 3
E14.74	Nicht näher bezeichneter Diabetes mellitus: Mit multiplen Komplikationen: Mit diabetischem Fußsyndrom, nicht als entgleist bezeichnet	2	2, 3
E14.75	Nicht näher bezeichneter Diabetes mellitus: Mit multiplen Komplikationen: Mit diabetischem Fußsyndrom, als entgleist bezeichnet	2	2, 3
E15	Hypoglykämisches Koma, nichtdiabetisch	2, 3, 4	2, 3
E20.0	Idiopathischer Hypoparathyreoidismus	2	1, 2

ICD	Beschreibung	OP CCL	Med. CCL
E20.1	Pseudohypoparathyreoidismus	2, 3, 4	2, 3
E20.8	Sonstiger Hypoparathyreoidismus	2	1, 2
E20.9	Hypoparathyreoidismus, nicht näher bezeichnet	2	1, 2
E21.0	Primärer Hyperparathyreoidismus	2	1, 2
E21.1	Sekundärer Hyperparathyreoidismus, anderenorts nicht klassifiziert	2	1, 2
E21.2	Sonstiger Hyperparathyreoidismus	2	1, 2
E21.3	Hyperparathyreoidismus, nicht näher bezeichnet	2	1, 2
E22.2	Syndrom der inadäquaten Sekretion von Adiuretin	2	2
E23.2	Diabetes insipidus	2	1, 2
E24.0	Hypophysäres Cushing-Syndrom	2	1, 2
E24.1	Nelson-Tumor	2	1, 2
E24.2	Arzneimittelinduziertes Cushing-Syndrom	2	1, 2
E24.3	Ektopisches ACTH-Syndrom	2	1, 2
E24.4	Alkoholinduziertes Pseudo-Cushing-Syndrom	2	1, 2
E24.8	Sonstiges Cushing-Syndrom	2	1, 2
E27.0	Sonstige Nebennierenrindenüberfunktion	2	1, 2
E27.1	Primäre Nebennierenrindeninsuffizienz	2	1, 2
E27.2	Addison-Krise	2	1, 2
E27.3	Arzneimittelinduzierte Nebennierenrindeninsuffizienz	2	1, 2
E27.4	Sonstige und nicht näher bezeichnete Nebennierenrindeninsuffizienz	2	1, 2
E27.5	Nebennierenmarküberfunktion	2	1, 2
E31.0	Autoimmune polyglanduläre Insuffizienz	2	1, 2
E31.1	Polyglanduläre Überfunktion	2	1, 2
E31.8	Sonstige polyglanduläre Dysfunktion	2	1, 2
E31.9	Polyglanduläre Dysfunktion, nicht näher bezeichnet	2	1, 2
E32.1	Abszess des Thymus	2, 3, 4	1, 2, 3
E34.0	Karzinoid-Syndrom	2	1, 2
E40	Kwashiorkor	2	2
E41	Alimentärer Marasmus	2	2
E42	Kwashiorkor-Marasmus	2	2
E43	Nicht näher bezeichnete erhebliche Energie- und Eiweißmangelernährung	2	2
E44.0	Mäßige Energie- und Eiweißmangelernährung	1, 2	2
E66.06	Adipositas durch übermäßige Kalorienzufuhr: Adipositas Grad III (WHO) bei Patienten von 18 Jahren und älter, Body-Mass-Index [BMI] von 40 bis unter 50	1, 2, 3	1, 3
E66.07	Adipositas durch übermäßige Kalorienzufuhr: Adipositas Grad III (WHO) bei Patienten von 18 Jahren und älter, Body-Mass-Index [BMI] von 50 bis unter 60	1, 2, 3	1, 3
E66.08	Adipositas durch übermäßige Kalorienzufuhr: Adipositas Grad III (WHO) bei Patienten von 18 Jahren und älter, Body-Mass-Index [BMI] von 60 und mehr	1, 2, 3	1, 3
E66.16	Arzneimittelinduzierte Adipositas: Adipositas Grad III (WHO) bei Patienten von 18 Jahren und älter, Body-Mass-Index [BMI] von 40 bis unter 50	1, 2, 3	1, 3
E66.17	Arzneimittelinduzierte Adipositas: Adipositas Grad III (WHO) bei Patienten von 18 Jahren und älter, Body-Mass-Index [BMI] von 50 bis unter 60	1, 2, 3	1, 3
E66.18	Arzneimittelinduzierte Adipositas: Adipositas Grad III (WHO) bei Patienten von 18 Jahren und älter, Body-Mass-Index [BMI] von 60 und mehr	1, 2, 3	1, 3
E66.26	Übermäßige Adipositas mit alveolärer Hypoventilation: Adipositas Grad III (WHO) bei Patienten von 18 Jahren und älter, Body-Mass-Index [BMI] von 40 bis unter 50	1, 2, 3	1, 3
E66.27	Übermäßige Adipositas mit alveolärer Hypoventilation: Adipositas Grad III (WHO) bei Patienten von 18 Jahren und älter, Body-Mass-Index [BMI] von 50 bis unter 60	1, 2, 3	1, 3
E66.28	Übermäßige Adipositas mit alveolärer Hypoventilation: Adipositas Grad III (WHO) bei Patienten von 18 Jahren und älter, Body-Mass-Index [BMI] von 60 und mehr	1, 2, 3	1, 3
E66.86	Sonstige Adipositas: Adipositas Grad III (WHO) bei Patienten von 18 Jahren und älter, Body-Mass-Index [BMI] von 40 bis unter 50	1, 2, 3	1, 3
E66.87	Sonstige Adipositas: Adipositas Grad III (WHO) bei Patienten von 18 Jahren und älter, Body-Mass-Index [BMI] von 50 bis unter 60	1, 2, 3	1, 3
E66.88	Sonstige Adipositas: Adipositas Grad III (WHO) bei Patienten von 18 Jahren und älter, Body-Mass-Index [BMI] von 60 und mehr	1, 2, 3	1, 3
E83.50	Kalziphylaxie	2, 3, 4	2, 3
E84.0	Zystische Fibrose mit Lungenmanifestationen	2, 3	2
E84.1	Zystische Fibrose mit Darmmanifestationen	2, 3	2
E84.80	Zystische Fibrose mit Lungen- und Darm-Manifestation	2, 3	2
E84.87	Zystische Fibrose mit sonstigen multiplen Manifestationen	2, 3	2
E84.88	Zystische Fibrose mit sonstigen Manifestationen	2, 3	2
E84.9	Zystische Fibrose, nicht näher bezeichnet	2, 3	2
E87.0	Hyperosmolalität und Hypernatriämie	2, 3, 4	1, 2, 3
E87.1	Hypoosmolalität und Hyponatriämie	2	1, 2
E88.3	Tumorlyse-Syndrom	3, 4	3
E89.1	Hypoinsulinämie nach medizinischen Maßnahmen	2, 3, 4	2, 3
E89.2	Hypoparathyreoidismus nach medizinischen Maßnahmen	2	1, 2

ICD	Beschreibung	OP CCL	Med. CCL
E89.6	Nebennierenrinden-(Nebennierenmark-) Unterfunktion nach medizinischen Maßnahmen	2	1, 2
F00.0	Demenz bei Alzheimer-Krankheit, mit frühem Beginn (Typ 2) {G30.0}	2, 3, 4	2, 3
F00.1	Demenz bei Alzheimer-Krankheit, mit spätem Beginn (Typ 1) {G30.1}	2, 3, 4	2, 3
F00.2	Demenz bei Alzheimer-Krankheit, atypische oder gemischte Form {G30.8}	2, 3, 4	2, 3
F00.9	Demenz bei Alzheimer-Krankheit, nicht näher bezeichnet {G30.9}	2, 3, 4	2, 3
F01.0	Vaskuläre Demenz mit akutem Beginn	2, 3, 4	2, 3
F01.1	Multiinfarkt-Demenz	2, 3, 4	2, 3
F01.2	Subkortikale vaskuläre Demenz	2, 3, 4	2, 3
F01.3	Gemischte kortikale und subkortikale vaskuläre Demenz	2, 3, 4	2, 3
F01.8	Sonstige vaskuläre Demenz	2, 3, 4	2, 3
F02.0	Demenz bei Pick-Krankheit {G31.0}	2, 3, 4	2, 3
F02.1	Demenz bei Creutzfeldt-Jakob-Krankheit {A81.0}	2, 3, 4	2, 3
F02.2	Demenz bei Chorea Huntington {G10}	2, 3, 4	2, 3
F02.3	Demenz bei primärem Parkinson-Syndrom {G20.-}	2, 3, 4	2, 3
F02.4	Demenz bei HIV-Krankheit [Humane Immundefizienz-Viruskrankheit] {B22}	2, 3, 4	2, 3
F02.8	Demenz bei anderenorts klassifizierten Krankheitsbildern	2, 3, 4	2, 3
F04	Organisches amnestisches Syndrom, nicht durch Alkohol oder andere psychotrope Substanzen bedingt	1	1
F05.0	Delir ohne Demenz	3, 4	1, 3
F05.1	Delir bei Demenz	3, 4	1, 3
F05.8	Sonstige Formen des Delirs	3, 4	1, 3
F06.0	Organische Halluzinose	2, 3, 4	2, 3
F06.1	Organische katatone Störung	2, 3, 4	2, 3
F06.2	Organische wahnhafte [schizophreniforme] Störung	2, 3, 4	2, 3
F06.3	Organische affektive Störungen	2, 3, 4	2, 3
F06.4	Organische Angststörung	2, 3, 4	2, 3
F06.5	Organische dissoziative Störung	2, 3, 4	2, 3
F06.6	Organische emotional labile [asthenische] Störung	2, 3, 4	2, 3
F07.0	Organische Persönlichkeitsstörung	2, 3, 4	2, 3
F10.0	Psychische und Verhaltensstörungen durch Alkohol: Akute Intoxikation [akuter Rausch]	1	1
F10.2	Psychische und Verhaltensstörungen durch Alkohol: Abhängigkeitssyndrom	1, 2	1
F10.3	Psychische und Verhaltensstörungen durch Alkohol: Entzugssyndrom	1, 2	1
F10.4	Psychische und Verhaltensstörungen durch Alkohol: Entzugssyndrom mit Delir	3, 4	3
F10.5	Psychische und Verhaltensstörungen durch Alkohol: Psychotische Störung	1	1
F10.7	Psychische und Verhaltensstörungen durch Alkohol: Restzustand und verzögert auftretende psychotische Störung	1	1
F10.8	Psychische und Verhaltensstörungen durch Alkohol: Sonstige psychische und Verhaltensstörungen	1	1
F11.0	Psychische und Verhaltensstörungen durch Opioide: Akute Intoxikation [akuter Rausch]	2	2
F11.2	Psychische und Verhaltensstörungen durch Opioide: Abhängigkeitssyndrom	2	2
F11.3	Psychische und Verhaltensstörungen durch Opioide: Entzugssyndrom	2	2
F11.4	Psychische und Verhaltensstörungen durch Opioide: Entzugssyndrom mit Delir	3, 4	3
F11.5	Psychische und Verhaltensstörungen durch Opioide: Psychotische Störung	1	1
F11.7	Psychische und Verhaltensstörungen durch Opioide: Restzustand und verzögert auftretende psychotische Störung	1	1
F11.8	Psychische und Verhaltensstörungen durch Opioide: Sonstige psychische und Verhaltensstörungen	1	1
F12.0	Psychische und Verhaltensstörungen durch Cannabinoide: Akute Intoxikation [akuter Rausch]	2	2
F12.2	Psychische und Verhaltensstörungen durch Cannabinoide: Abhängigkeitssyndrom	2	2
F12.3	Psychische und Verhaltensstörungen durch Cannabinoide: Entzugssyndrom	2	2
F12.4	Psychische und Verhaltensstörungen durch Cannabinoide: Entzugssyndrom mit Delir	3, 4	3
F12.5	Psychische und Verhaltensstörungen durch Cannabinoide: Psychotische Störung	1	1
F12.7	Psychische und Verhaltensstörungen durch Cannabinoide: Restzustand und verzögert auftretende psychotische Störung	1	1
F12.8	Psychische und Verhaltensstörungen durch Cannabinoide: Sonstige psychische und Verhaltensstörungen	1	1

ICD	Beschreibung	OP CCL	Med. CCL
F13.0	Psychische und Verhaltensstörungen durch Sedativa oder Hypnotika: Akute Intoxikation [akuter Rausch]	2	2
F13.2	Psychische und Verhaltensstörungen durch Sedativa oder Hypnotika: Abhängigkeitssyndrom	2	2
F13.3	Psychische und Verhaltensstörungen durch Sedativa oder Hypnotika: Entzugssyndrom	2	2
F13.4	Psychische und Verhaltensstörungen durch Sedativa oder Hypnotika: Entzugssyndrom mit Delir	3, 4	3
F13.5	Psychische und Verhaltensstörungen durch Sedativa oder Hypnotika: Psychotische Störung	1	1
F13.7	Psychische und Verhaltensstörungen durch Sedativa oder Hypnotika: Restzustand und verzögert auftretende psychotische Störung	1	1
F13.8	Psychische und Verhaltensstörungen durch Sedativa oder Hypnotika: Sonstige psychische und Verhaltensstörungen	1	1
F14.0	Psychische und Verhaltensstörungen durch Kokain: Akute Intoxikation [akuter Rausch]	2	2
F14.2	Psychische und Verhaltensstörungen durch Kokain: Abhängigkeitssyndrom	2	2
F14.3	Psychische und Verhaltensstörungen durch Kokain: Entzugssyndrom	2	2
F14.4	Psychische und Verhaltensstörungen durch Kokain: Entzugssyndrom mit Delir	3, 4	3
F14.5	Psychische und Verhaltensstörungen durch Kokain: Psychotische Störung	1	1
F14.7	Psychische und Verhaltensstörungen durch Kokain: Restzustand und verzögert auftretende psychotische Störung	1	1
F14.8	Psychische und Verhaltensstörungen durch Kokain: Sonstige psychische und Verhaltensstörungen	1	1
F15.0	Psychische und Verhaltensstörungen durch andere Stimulanzien, einschließlich Koffein: Akute Intoxikation [akuter Rausch]	2	2
F15.2	Psychische und Verhaltensstörungen durch andere Stimulanzien, einschließlich Koffein: Abhängigkeitssyndrom	2	2
F15.3	Psychische und Verhaltensstörungen durch andere Stimulanzien, einschließlich Koffein: Entzugssyndrom	2	2
F15.4	Psychische und Verhaltensstörungen durch andere Stimulanzien, einschließlich Koffein: Entzugssyndrom mit Delir	3, 4	3
F15.5	Psychische und Verhaltensstörungen durch andere Stimulanzien, einschließlich Koffein: Psychotische Störung	1	1
F15.7	Psychische und Verhaltensstörungen durch andere Stimulanzien, einschließlich Koffein: Restzustand und verzögert auftretende psychotische Störung	1	1
F15.8	Psychische und Verhaltensstörungen durch andere Stimulanzien, einschließlich Koffein: Sonstige psychische und Verhaltensstörungen	1	1
F16.0	Psychische und Verhaltensstörungen durch Halluzinogene: Akute Intoxikation [akuter Rausch]	2	2
F16.2	Psychische und Verhaltensstörungen durch Halluzinogene: Abhängigkeitssyndrom	2	2
F16.3	Psychische und Verhaltensstörungen durch Halluzinogene: Entzugssyndrom	2	2
F16.4	Psychische und Verhaltensstörungen durch Halluzinogene: Entzugssyndrom mit Delir	3, 4	3
F16.5	Psychische und Verhaltensstörungen durch Halluzinogene: Psychotische Störung	1	1
F16.7	Psychische und Verhaltensstörungen durch Halluzinogene: Restzustand und verzögert auftretende psychotische Störung	1	1
F16.8	Psychische und Verhaltensstörungen durch Halluzinogene: Sonstige psychische und Verhaltensstörungen	1	1
F18.0	Psychische und Verhaltensstörungen durch flüchtige Lösungsmittel: Akute Intoxikation [akuter Rausch]	2	2
F18.2	Psychische und Verhaltensstörungen durch flüchtige Lösungsmittel: Abhängigkeitssyndrom	2	2
F18.3	Psychische und Verhaltensstörungen durch flüchtige Lösungsmittel: Entzugssyndrom	2	2

ICD	Beschreibung	OP CCL	Med. CCL
F18.4	Psychische und Verhaltensstörungen durch flüchtige Lösungsmittel: Entzugssyndrom mit Delir	3, 4	3
F18.5	Psychische und Verhaltensstörungen durch flüchtige Lösungsmittel: Psychotische Störung	1	1
F18.7	Psychische und Verhaltensstörungen durch flüchtige Lösungsmittel: Restzustand und verzögert auftretende psychotische Störung	1	1
F18.8	Psychische und Verhaltensstörungen durch flüchtige Lösungsmittel: Sonstige psychische und Verhaltensstörungen	1	1
F19.0	Psychische und Verhaltensstörungen durch multiplen Substanzgebrauch und Konsum anderer psychotroper Substanzen: Akute Intoxikation [akuter Rausch]	2	2
F19.2	Psychische und Verhaltensstörungen durch multiplen Substanzgebrauch und Konsum anderer psychotroper Substanzen: Abhängigkeitssyndrom	2	2
F19.3	Psychische und Verhaltensstörungen durch multiplen Substanzgebrauch und Konsum anderer psychotroper Substanzen: Entzugssyndrom	2	2
F19.4	Psychische und Verhaltensstörungen durch multiplen Substanzgebrauch und Konsum anderer psychotroper Substanzen: Entzugssyndrom mit Delir	3, 4	3
F19.5	Psychische und Verhaltensstörungen durch multiplen Substanzgebrauch und Konsum anderer psychotroper Substanzen: Psychotische Störung	1	1
F19.7	Psychische und Verhaltensstörungen durch multiplen Substanzgebrauch und Konsum anderer psychotroper Substanzen: Restzustand und verzögert auftretende psychotische Störung	1	1
F19.8	Psychische und Verhaltensstörungen durch multiplen Substanzgebrauch und Konsum anderer psychotroper Substanzen: Sonstige psychische und Verhaltensstörungen	1	1
F20.0	Paranoide Schizophrenie	2	2
F20.1	Hebephrene Schizophrenie	2	2
F20.2	Katatone Schizophrenie	2	2
F20.3	Undifferenzierte Schizophrenie	2	2
F20.5	Schizophrenes Residuum	2	2
F20.6	Schizophrenia simplex	2	2
F20.8	Sonstige Schizophrenie	2	2
F20.9	Schizophrenie, nicht näher bezeichnet	2	2

ICD	Beschreibung	OP CCL	Med. CCL
F21	Schizotype Störung	2, 3	2, 3
F22.0	Wahnhafte Störung	2, 3	2, 3
F23.0	Akute polymorphe psychotische Störung ohne Symptome einer Schizophrenie	2	2
F23.1	Akute polymorphe psychotische Störung mit Symptomen einer Schizophrenie	2	2
F23.2	Akute schizophreniforme psychotische Störung	2	2
F23.3	Sonstige akute vorwiegend wahnhafte psychotische Störungen	2	2
F23.8	Sonstige akute vorübergehende psychotische Störungen	2	2
F23.9	Akute vorübergehende psychotische Störung, nicht näher bezeichnet	2	2
F25.0	Schizoaffektive Störung, gegenwärtig manisch	2	2
F25.1	Schizoaffektive Störung, gegenwärtig depressiv	2	2
F25.2	Gemischte schizoaffektive Störung	2	2
F25.8	Sonstige schizoaffektive Störungen	2	2
F25.9	Schizoaffektive Störung, nicht näher bezeichnet	2	2
F29	Nicht näher bezeichnete nichtorganische Psychose	2	2
F30.0	Hypomanie	2	2
F30.1	Manie ohne psychotische Symptome	2	2
F30.2	Manie mit psychotischen Symptomen	2	2
F30.8	Sonstige manische Episoden	2	2
F30.9	Manische Episode, nicht näher bezeichnet	2	2
F31.0	Bipolare affektive Störung, gegenwärtig hypomanische Episode	2	2
F31.1	Bipolare affektive Störung, gegenwärtig manische Episode ohne psychotische Symptome	2	2
F31.2	Bipolare affektive Störung, gegenwärtig manische Episode mit psychotischen Symptomen	2	2
F31.4	Bipolare affektive Störung, gegenwärtig schwere depressive Episode ohne psychotische Symptome	2	2
F31.5	Bipolare affektive Störung, gegenwärtig schwere depressive Episode mit psychotischen Symptomen	2	2
F31.6	Bipolare affektive Störung, gegenwärtig gemischte Episode	2	2
F31.8	Sonstige bipolare affektive Störungen	2	2
F31.9	Bipolare affektive Störung, nicht näher bezeichnet	2	2
F32.2	Schwere depressive Episode ohne psychotische Symptome	2	2
F32.3	Schwere depressive Episode mit psychotischen Symptomen	2	2
F33.2	Rezidivierende depressive Störung, gegenwärtig schwere Episode ohne psychotische Symptome	2	2

ICD	Beschreibung	OP CCL	Med. CCL
F33.3	Rezidivierende depressive Störung, gegenwärtig schwere Episode mit psychotischen Symptomen	2	2
F50.00	Anorexia nervosa, restriktiver Typ	1, 2	1, 2
F50.01	Anorexia nervosa, aktiver Typ	1, 2	1, 2
F50.08	Sonstige und nicht näher bezeichnete Anorexia nervosa	1, 2	1, 2
F50.1	Atypische Anorexia nervosa	1, 2	1, 2
F50.2	Bulimia nervosa	1, 2	1, 2
F50.3	Atypische Bulimia nervosa	1, 2	1, 2
F60.0	Paranoide Persönlichkeitsstörung	2, 3	2, 3
F60.1	Schizoide Persönlichkeitsstörung	2, 3	2, 3
F72.0	Schwere Intelligenzminderung: Keine oder geringfügige Verhaltensstörung	1	1
F72.1	Schwere Intelligenzminderung: Deutliche Verhaltensstörung, die Beobachtung oder Behandlung erfordert	1	1
F72.8	Schwere Intelligenzminderung: Sonstige Verhaltensstörung	1	1
F72.9	Schwere Intelligenzminderung: Ohne Angabe einer Verhaltensstörung	1	1
F73.0	Schwerste Intelligenzminderung: Keine oder geringfügige Verhaltensstörung	2, 3, 4	2, 3
F73.1	Schwerste Intelligenzminderung: Deutliche Verhaltensstörung, die Beobachtung oder Behandlung erfordert	2, 3, 4	2, 3
F73.8	Schwerste Intelligenzminderung: Sonstige Verhaltensstörung	2, 3, 4	2, 3
F73.9	Schwerste Intelligenzminderung: Ohne Angabe einer Verhaltensstörung	2, 3, 4	2, 3
F84.0	Frühkindlicher Autismus	1, 2	1, 2
F84.1	Atypischer Autismus	1, 2	1, 2
F84.2	Rett-Syndrom	2, 3	1, 2, 3
F84.3	Andere desintegrative Störung des Kindesalters	1, 2	1, 2
F84.4	Überaktive Störung mit Intelligenzminderung und Bewegungsstereotypien	1, 2	1, 2
F84.5	Asperger-Syndrom	1, 2	1, 2
F84.8	Sonstige tief greifende Entwicklungsstörungen	1, 2	1, 2
F84.9	Tief greifende Entwicklungsstörung, nicht näher bezeichnet	1, 2	1, 2
F98.2	Fütterstörung im frühen Kindesalter	1, 2	1, 2
G00.0	Meningitis durch Haemophilus influenzae	3, 4	3
G00.1	Pneumokokkenmeningitis	3, 4	3
G00.2	Streptokokkenmeningitis	3, 4	3
G00.3	Staphylokokkenmeningitis	3, 4	3
G00.8	Sonstige bakterielle Meningitis	3, 4	3
G00.9	Bakterielle Meningitis, nicht näher bezeichnet	3, 4	3
G01	Meningitis bei anderenorts klassifizierten bakteriellen Krankheiten	3, 4	3
G02.0	Meningitis bei anderenorts klassifizierten Viruskrankheiten	3, 4	3
G02.1	Meningitis bei anderenorts klassifizierten Mykosen	3, 4	3
G02.8	Meningitis bei sonstigen näher bezeichneten anderenorts klassifizierten infektiösen und parasitären Krankheiten	3, 4	3
G03.0	Nichteitrige Meningitis	3, 4	3
G03.1	Chronische Meningitis	3, 4	3
G03.2	Benigne rezidivierende Meningitis [Mollaret-Meningitis]	3, 4	3
G03.8	Meningitis durch sonstige näher bezeichnete Ursachen	3, 4	3
G03.9	Meningitis, nicht näher bezeichnet	3, 4	3
G04.0	Akute disseminierte Enzephalitis	3, 4	3
G04.1	Humane T-Zell-lymphotrope Virus-assoziierte Myelopathie	1, 3, 4	1, 3
G04.2	Bakterielle Meningoenzephalitis und Meningomyelitis, anderenorts nicht klassifiziert	3, 4	3
G04.8	Sonstige Enzephalitis, Myelitis und Enzephalomyelitis	3, 4	3
G04.9	Enzephalitis, Myelitis und Enzephalomyelitis, nicht näher bezeichnet	1	1
G05.0	Enzephalitis, Myelitis und Enzephalomyelitis bei anderenorts klassifizierten bakteriellen Krankheiten	3, 4	3
G05.1	Enzephalitis, Myelitis und Enzephalomyelitis bei anderenorts klassifizierten Viruskrankheiten	3, 4	3
G05.2	Enzephalitis, Myelitis und Enzephalomyelitis bei sonstigen anderenorts klassifizierten infektiösen und parasitären Krankheiten	3, 4	3
G05.8	Enzephalitis, Myelitis und Enzephalomyelitis bei sonstigen anderenorts klassifizierten Krankheiten	3, 4	3
G06.0	Intrakranieller Abszess und intrakranielles Granulom	3, 4	3
G06.1	Intraspinaler Abszess und intraspinales Granulom	3, 4	3
G06.2	Extraduraler und subduraler Abszess, nicht näher bezeichnet	3, 4	3
G07	Intrakranielle und intraspinale Abszesse und Granulome bei anderenorts klassifizierten Krankheiten	3, 4	3
G08	Intrakranielle und intraspinale Phlebitis und Thrombophlebitis	1, 2	2
G12.0	Infantile spinale Muskelatrophie, Typ I [Typ Werdnig-Hoffmann]	2, 3	1, 2, 3
G12.1	Sonstige vererbte spinale Muskelatrophie	2, 3	1, 2, 3
G12.2	Motoneuron-Krankheit	2, 3	1, 2, 3
G12.8	Sonstige spinale Muskelatrophien und verwandte Syndrome	2, 3	1, 2, 3
G12.9	Spinale Muskelatrophie, nicht näher bezeichnet	2, 3	1, 2, 3
G14	Postpolio-Syndrom	1, 2	2
G20.00	Primäres Parkinson-Syndrom mit fehlender oder geringer Beeinträchtigung: Ohne Wirkungsfluktuation	2, 3	1, 2, 3

ICD	Beschreibung	OP CCL	Med. CCL
G20.01	Primäres Parkinson-Syndrom mit fehlender oder geringer Beeinträchtigung: Mit Wirkungsfluktuation	2, 3	1, 2, 3
G20.10	Primäres Parkinson-Syndrom mit mäßiger bis schwerer Beeinträchtigung: Ohne Wirkungsfluktuation	3	3
G20.11	Primäres Parkinson-Syndrom mit mäßiger bis schwerer Beeinträchtigung: Mit Wirkungsfluktuation	3	3
G20.20	Primäres Parkinson-Syndrom mit schwerster Beeinträchtigung: Ohne Wirkungsfluktuation	3	3
G20.21	Primäres Parkinson-Syndrom mit schwerster Beeinträchtigung: Mit Wirkungsfluktuation	3	3
G21.0	Malignes Neuroleptika-Syndrom	2	2
G21.1	Sonstiges arzneimittelinduziertes Parkinson-Syndrom	2	2
G21.2	Parkinson-Syndrom durch sonstige exogene Agenzien	2	2
G21.3	Postenzephalitisches Parkinson-Syndrom	2	2
G21.4	Vaskuläres Parkinson-Syndrom	2	2
G21.8	Sonstiges sekundäres Parkinson-Syndrom	2	2
G30.0	Alzheimer-Krankheit mit frühem Beginn {F00.0}	2	2
G30.1	Alzheimer-Krankheit mit spätem Beginn {F00.1}	2	2
G30.8	Sonstige Alzheimer-Krankheit {F00.2}	2	2
G31.81	Mitochondriale Zytopathie	2	2
G31.82	Lewy-Körper-Krankheit	2	2
G31.88	Sonstige näher bezeichnete degenerative Krankheiten des Nervensystems	2	2
G35.0	Erstmanifestation einer multiplen Sklerose	2	2
G35.10	Multiple Sklerose mit vorherrschend schubförmigem Verlauf: Ohne Angabe einer akuten Exazerbation oder Progression	2	2
G35.11	Multiple Sklerose mit vorherrschend schubförmigem Verlauf: Mit Angabe einer akuten Exazerbation oder Progression	2	2
G35.20	Multiple Sklerose mit primär-chronischem Verlauf: Ohne Angabe einer akuten Exazerbation oder Progression	2	2
G35.21	Multiple Sklerose mit primär-chronischem Verlauf: Mit Angabe einer akuten Exazerbation oder Progression	2	2
G35.30	Multiple Sklerose mit sekundär-chronischem Verlauf: Ohne Angabe einer akuten Exazerbation oder Progression	2	2
G35.31	Multiple Sklerose mit sekundär-chronischem Verlauf: Mit Angabe einer akuten Exazerbation oder Progression	2	2
G40.3	Generalisierte idiopathische Epilepsie und epileptische Syndrome	1, 2, 3, 4	1, 2
G40.6	Grand-Mal-Anfälle, nicht näher bezeichnet (mit oder ohne Petit-Mal)	1, 2, 3, 4	1, 2
G41.0	Grand-Mal-Status	1, 2, 3, 4	1, 2
G41.1	Petit-Mal-Status	1, 2, 3, 4	1, 2
G41.2	Status epilepticus mit komplexfokalen Anfällen	1, 2, 3, 4	1, 2
G41.8	Sonstiger Status epilepticus	1, 2, 3, 4	1, 2
G41.9	Status epilepticus, nicht näher bezeichnet	1, 2, 3, 4	1, 2
G46.3	Hirnstammsyndrom {I60-I67}	3, 4	2, 3
G46.4	Kleinhirnsyndrom {I60-I67}	3, 4	2, 3
G61.0	Guillain-Barré-Syndrom	2	2
G70.0	Myasthenia gravis	2, 3	1, 2, 3
G70.2	Angeborene oder entwicklungsbedingte Myasthenie	2, 3	1, 2, 3
G71.0	Muskeldystrophie	2, 3	1, 2, 3
G71.2	Angeborene Myopathien	2, 3	1, 2, 3
G71.3	Mitochondriale Myopathie, anderenorts nicht klassifiziert	2, 3	1, 2, 3
G71.8	Sonstige primäre Myopathien	2, 3	1, 2, 3
G72.0	Arzneimittelinduzierte Myopathie	3, 4	3
G72.1	Alkoholmyopathie	3, 4	3
G72.2	Myopathie durch sonstige toxische Agenzien	3, 4	3
G72.4	Entzündliche Myopathie, anderenorts nicht klassifiziert	2, 3	1, 2, 3
G73.0	Myastheniesyndrome bei endokrinen Krankheiten	2, 3	1, 2, 3
G73.1	Lambert-Eaton-Syndrom {C00-D48}	2, 3	1, 2, 3
G73.2	Sonstige Myastheniesyndrome bei Neubildungen {C00-D48}	2, 3	1, 2, 3
G73.3	Myastheniesyndrome bei sonstigen anderenorts klassifizierten Krankheiten	2, 3	1, 2, 3
G73.6	Myopathie bei Stoffwechselkrankheiten	3, 4	3
G80.0	Spastische tetraplegische Zerebralparese	1, 3, 4	1, 3
G80.1	Spastische diplegische Zerebralparese	1, 3, 4	1, 3
G80.2	Infantile hemiplegische Zerebralparese	1, 3, 4	1, 3
G80.3	Dyskinetische Zerebralparese	1, 3, 4	1, 3
G80.4	Ataktische Zerebralparese	1, 3, 4	1, 3
G80.8	Sonstige infantile Zerebralparese	1, 3, 4	1, 3
G81.0	Schlaffe Hemiparese und Hemiplegie	1, 3, 4	1, 3
G81.1	Spastische Hemiparese und Hemiplegie	1, 3, 4	1, 3
G82.00	Schlaffe Paraparese und Paraplegie: Akute komplette Querschnittlähmung nichttraumatischer Genese	1, 3, 4	1, 3
G82.01	Schlaffe Paraparese und Paraplegie: Akute inkomplette Querschnittlähmung nichttraumatischer Genese	1, 3, 4	1, 3
G82.02	Schlaffe Paraparese und Paraplegie: Chronische komplette Querschnittlähmung	1, 3, 4	1, 3

ICD	Beschreibung	OP CCL	Med. CCL
G82.03	Schlaffe Paraparese und Paraplegie: Chronische inkomplette Querschnittlähmung	1, 3, 4	1, 3
G82.10	Spastische Paraparese und Paraplegie: Akute komplette Querschnittlähmung nichttraumatischer Genese	1, 3, 4	1, 3
G82.11	Spastische Paraparese und Paraplegie: Akute inkomplette Querschnittlähmung nichttraumatischer Genese	1, 3, 4	1, 3
G82.12	Spastische Paraparese und Paraplegie: Chronische komplette Querschnittlähmung	1, 3, 4	1, 3
G82.13	Spastische Paraparese und Paraplegie: Chronische inkomplette Querschnittlähmung	1, 3, 4	1, 3
G82.20	Paraparese und Paraplegie, nicht näher bezeichnet: Akute komplette Querschnittlähmung nichttraumatischer Genese	1, 3, 4	1, 3
G82.21	Paraparese und Paraplegie, nicht näher bezeichnet: Akute inkomplette Querschnittlähmung nichttraumatischer Genese	1, 3, 4	1, 3
G82.22	Paraparese und Paraplegie, nicht näher bezeichnet: Chronische komplette Querschnittlähmung	1, 3, 4	1, 3
G82.23	Paraparese und Paraplegie, nicht näher bezeichnet: Chronische inkomplette Querschnittlähmung	1, 3, 4	1, 3
G82.30	Schlaffe Tetraparese und Tetraplegie: Akute komplette Querschnittlähmung nichttraumatischer Genese	1, 3, 4	1, 3
G82.31	Schlaffe Tetraparese und Tetraplegie: Akute inkomplette Querschnittlähmung nichttraumatischer Genese	1, 3, 4	1, 3
G82.32	Schlaffe Tetraparese und Tetraplegie: Chronische komplette Querschnittlähmung	1, 3, 4	1, 3
G82.33	Schlaffe Tetraparese und Tetraplegie: Chronische inkomplette Querschnittlähmung	1, 3, 4	1, 3
G82.40	Spastische Tetraparese und Tetraplegie: Akute komplette Querschnittlähmung nichttraumatischer Genese	1, 3, 4	1, 3
G82.41	Spastische Tetraparese und Tetraplegie: Akute inkomplette Querschnittlähmung nichttraumatischer Genese	1, 3, 4	1, 3
G82.42	Spastische Tetraparese und Tetraplegie: Chronische komplette Querschnittlähmung	1, 3, 4	1, 3
G82.43	Spastische Tetraparese und Tetraplegie: Chronische inkomplette Querschnittlähmung	1, 3, 4	1, 3
G83.0	Diparese und Diplegie der oberen Extremitäten	2, 3	1, 2, 3
G83.40	Komplettes Cauda- (equina-) Syndrom	2, 3	1, 2, 3
G83.41	Inkomplettes Cauda- (equina-) Syndrom	2, 3	1, 2, 3
G83.49	Cauda- (equina-) Syndrom, nicht näher bezeichnet	2, 3	1, 2, 3
G83.5	Locked-in-Syndrom	2, 3	1, 2, 3
G83.6	Zentrale faziale Parese	2, 3	1, 2, 3
G83.8	Sonstige näher bezeichnete Lähmungssyndrome	2, 3	1, 2, 3
G91.1	Hydrocephalus occlusus	2, 3	1, 2, 3
G91.20	Idiopathischer Normaldruckhydrozephalus	2, 3	1, 2, 3
G91.21	Sekundärer Normaldruckhydrozephalus	2, 3	1, 2, 3
G91.29	Normaldruckhydrozephalus, nicht näher bezeichnet	2, 3	1, 2, 3
G91.3	Posttraumatischer Hydrozephalus, nicht näher bezeichnet	2, 3	1, 2, 3
G91.8	Sonstiger Hydrozephalus	2, 3	1, 2, 3
G91.9	Hydrozephalus, nicht näher bezeichnet	2, 3	1, 2, 3
G92.0	Toxische Enzephalopathie unter Immuntherapie	3, 4	3
G92.9	Sonstige und nicht näher bezeichnete toxische Enzephalopathie	3, 4	3
G93.0	Hirnzysten	2, 3	1, 2, 3
G93.1	Anoxische Hirnschädigung, anderenorts nicht klassifiziert	2, 3	1, 2, 3
G93.2	Benigne intrakranielle Hypertension [Pseudotumor cerebri]	2, 3	1, 2, 3
G93.5	Compressio cerebri	2, 3	1, 2, 3
G93.6	Hirnödem	2, 3	1, 2, 3
G93.7	Reye-Syndrom	2, 3	1, 2, 3
G93.80	Apallisches Syndrom	2, 4	2, 3
G94.0	Hydrozephalus bei anderenorts klassifizierten infektiösen und parasitären Krankheiten {A00-B99}	2, 3	1, 2, 3
G94.1	Hydrozephalus bei Neubildungen {C00-D48}	2, 3	1, 2, 3
G94.2	Hydrozephalus bei sonstigen anderenorts klassifizierten Krankheiten	2, 3	1, 2, 3
G94.30	Enzephalopathie bei anderenorts klassifizierten endokrinen und Stoffwechselkrankheiten	1	1
G94.31	Enzephalopathie bei anderenorts klassifizierten infektiösen und parasitären Krankheiten	1	1
G94.32	Septische Enzephalopathie	1	1
G96.0	Austritt von Liquor cerebrospinalis	3, 4	3
G97.0	Austritt von Liquor cerebrospinalis nach Lumbalpunktion	3, 4	3
G97.1	Sonstige Reaktion auf Spinal- und Lumbalpunktion	3, 4	3
G97.2	Intrakranielle Druckminderung nach ventrikulärem Shunt	1, 2, 3	1, 2
G97.80	Postoperative Liquorfistel	3, 4	3
H59.0	Keratopathie (bullös-aphak) nach Kataraktextraktion	2, 3, 4	2, 3
H60.1	Phlegmone des äußeren Ohres	2	2
H95.0	Rezidivierendes Cholesteatom in der Mastoidhöhle nach Mastoidektomie	2	2

ICD	Beschreibung	OP CCL	Med. CCL
H95.1	Sonstige Krankheiten nach Mastoidektomie	2	2
I05.0	Mitralklappenstenose	1	1
I05.1	Rheumatische Mitralklappeninsuffizienz	1	1
I05.2	Mitralklappenstenose mit Insuffizienz	1	1
I05.8	Sonstige Mitralklappenkrankheiten	1	1
I06.0	Rheumatische Aortenklappenstenose	2, 3	2, 3
I06.1	Rheumatische Aortenklappeninsuffizienz	2, 3	2, 3
I06.2	Rheumatische Aortenklappenstenose mit Insuffizienz	2, 3	2, 3
I06.8	Sonstige rheumatische Aortenklappenkrankheiten	2, 3	2, 3
I07.0	Trikuspidalklappenstenose	2, 3	2, 3
I07.1	Trikuspidalklappeninsuffizienz	2, 3	2, 3
I07.2	Trikuspidalklappenstenose mit Insuffizienz	2, 3	2, 3
I07.8	Sonstige Trikuspidalklappenkrankheiten	2, 3	2, 3
I08.0	Krankheiten der Mitral- und Aortenklappe, kombiniert	2, 3	2, 3
I08.1	Krankheiten der Mitral- und Trikuspidalklappe, kombiniert	2, 3	2, 3
I08.2	Krankheiten der Aorten- und Trikuspidalklappe, kombiniert	2, 3	2, 3
I08.3	Krankheiten der Mitral-, Aorten- und Trikuspidalklappe, kombiniert	2, 3	2, 3
I08.8	Sonstige Krankheiten mehrerer Herzklappen	2, 3	2, 3
I09.0	Rheumatische Myokarditis	1, 2, 3	1, 2
I09.1	Rheumatische Krankheiten des Endokards, Herzklappe nicht näher bezeichnet	2, 3	2, 3
I09.8	Sonstige näher bezeichnete rheumatische Herzkrankheiten	1, 2, 3	1, 2
I11.00	Hypertensive Herzkrankheit mit (kongestiver) Herzinsuffizienz: Ohne Angabe einer hypertensiven Krise	1, 2, 3	2, 3
I11.01	Hypertensive Herzkrankheit mit (kongestiver) Herzinsuffizienz: Mit Angabe einer hypertensiven Krise	1, 2, 3	2, 3
I13.00	Hypertensive Herz- und Nierenkrankheit mit (kongestiver) Herzinsuffizienz: Ohne Angabe einer hypertensiven Krise	1, 2, 3	2, 3
I13.01	Hypertensive Herz- und Nierenkrankheit mit (kongestiver) Herzinsuffizienz: Mit Angabe einer hypertensiven Krise	1, 2, 3	2, 3
I13.20	Hypertensive Herz- und Nierenkrankheit mit (kongestiver) Herzinsuffizienz und Niereninsuffizienz: Ohne Angabe einer hypertensiven Krise	1, 2, 3	2, 3
I13.21	Hypertensive Herz- und Nierenkrankheit mit (kongestiver) Herzinsuffizienz und Niereninsuffizienz: Mit Angabe einer hypertensiven Krise	1, 2, 3	2, 3
I20.0	Instabile Angina pectoris	2	2, 3
I20.1	Angina pectoris mit nachgewiesenem Koronarspasmus	2	2, 3
I21.0	Akuter transmuraler Myokardinfarkt der Vorderwand	3, 4	1, 3
I21.1	Akuter transmuraler Myokardinfarkt der Hinterwand	3, 4	1, 3
I21.2	Akuter transmuraler Myokardinfarkt an sonstigen Lokalisationen	3, 4	1, 3
I21.3	Akuter transmuraler Myokardinfarkt an nicht näher bezeichneter Lokalisation	3, 4	1, 3
I21.4	Akuter subendokardialer Myokardinfarkt	3, 4	1, 3
I21.9	Akuter Myokardinfarkt, nicht näher bezeichnet	3, 4	1, 3
I23.0	Hämoperikard als akute Komplikation nach akutem Myokardinfarkt	2, 3, 4	3
I23.1	Vorhofseptumdefekt als akute Komplikation nach akutem Myokardinfarkt	1, 2, 3	1, 2
I23.2	Ventrikelseptumdefekt als akute Komplikation nach akutem Myokardinfarkt	1, 2, 3	1, 2
I23.3	Ruptur der Herzwand ohne Hämoperikard als akute Komplikation nach akutem Myokardinfarkt	1, 2, 3	1, 2
I23.4	Ruptur der Chordae tendineae als akute Komplikation nach akutem Myokardinfarkt	2, 3	2, 3
I23.5	Papillarmuskelruptur als akute Komplikation nach akutem Myokardinfarkt	2, 3	2, 3
I23.6	Thrombose des Vorhofes, des Herzohres oder der Kammer als akute Komplikation nach akutem Myokardinfarkt	1, 2, 3	1, 2
I24.0	Koronarthrombose ohne nachfolgenden Myokardinfarkt	2	2, 3
I24.1	Postmyokardinfarkt-Syndrom	1, 2, 3	1, 2
I24.8	Sonstige Formen der akuten ischämischen Herzkrankheit	2	2, 3
I26.0	Lungenembolie mit Angabe eines akuten Cor pulmonale	3, 4	2, 3
I26.9	Lungenembolie ohne Angabe eines akuten Cor pulmonale	3, 4	2, 3
I27.0	Primäre pulmonale Hypertonie	1, 2, 3	1, 2
I30.0	Akute unspezifische idiopathische Perikarditis	1, 2, 3	1, 2
I30.1	Infektiöse Perikarditis	2, 3, 4	3
I30.8	Sonstige Formen der akuten Perikarditis	2, 3, 4	3
I31.0	Chronische adhäsive Perikarditis	2, 3, 4	3
I31.1	Chronische konstriktive Perikarditis	2, 3, 4	3
I31.2	Hämoperikard, anderenorts nicht klassifiziert	2, 3, 4	3
I31.3	Perikarderguss (nichtentzündlich)	1, 2, 3	1, 2

ICD	Beschreibung	OP CCL	Med. CCL
I32.0	Perikarditis bei anderenorts klassifizierten bakteriellen Krankheiten	1, 2, 3	1, 2
I32.1	Perikarditis bei sonstigen anderenorts klassifizierten infektiösen und parasitären Krankheiten	1, 2, 3	1, 2
I32.8	Perikarditis bei sonstigen anderenorts klassifizierten Krankheiten	1, 2, 3	1, 2
I33.0	Akute und subakute infektiöse Endokarditis	3, 4	3
I33.9	Akute Endokarditis, nicht näher bezeichnet	3, 4	3
I34.1	Mitralklappenprolaps	1	1
I34.2	Nichtrheumatische Mitralklappenstenose	1	1
I34.80	Nichtrheumatische Mitralklappenstenose mit Mitralklappeninsuffizienz	1	1
I35.0	Aortenklappenstenose	1	1
I35.2	Aortenklappenstenose mit Insuffizienz	1	1
I36.0	Nichtrheumatische Trikuspidalklappenstenose	1, 2	1, 2
I36.2	Nichtrheumatische Trikuspidalklappenstenose mit Insuffizienz	1, 2	1, 2
I36.8	Sonstige nichtrheumatische Trikuspidalklappenkrankheiten	1, 2	1, 2
I37.0	Pulmonalklappenstenose	2, 3	2, 3
I37.1	Pulmonalklappeninsuffizienz	2, 3	2, 3
I37.2	Pulmonalklappenstenose mit Insuffizienz	2, 3	2, 3
I37.8	Sonstige Pulmonalklappenkrankheiten	2, 3	2, 3
I39.0	Mitralklappenkrankheiten bei anderenorts klassifizierten Krankheiten	2, 3	2, 3
I39.1	Aortenklappenkrankheiten bei anderenorts klassifizierten Krankheiten	2, 3	2, 3
I39.2	Trikuspidalklappenkrankheiten bei anderenorts klassifizierten Krankheiten	2, 3	2, 3
I39.3	Pulmonalklappenkrankheiten bei anderenorts klassifizierten Krankheiten	2, 3	2, 3
I39.4	Krankheiten mehrerer Herzklappen bei anderenorts klassifizierten Krankheiten	2, 3	2, 3
I40.0	Infektiöse Myokarditis	1, 2, 3	1, 2
I40.1	Isolierte Myokarditis	1, 2, 3	1, 2
I40.8	Sonstige akute Myokarditis	1, 2, 3	1, 2
I41.0	Myokarditis bei anderenorts klassifizierten bakteriellen Krankheiten	1, 2, 3	1, 2
I41.1	Myokarditis bei anderenorts klassifizierten Viruskrankheiten	1, 2, 3	1, 2
I41.2	Myokarditis bei sonstigen anderenorts klassifizierten infektiösen und parasitären Krankheiten	1, 2, 3	1, 2
I41.8	Myokarditis bei sonstigen anderenorts klassifizierten Krankheiten	1, 2, 3	1, 2
I42.0	Dilatative Kardiomyopathie	1, 2	1, 2
I42.1	Hypertrophische obstruktive Kardiomyopathie	1, 2	1, 2
I42.2	Sonstige hypertrophische Kardiomyopathie	1, 2	1, 2
I42.3	Eosinophile endomyokardiale Krankheit	1, 2	1, 2
I42.4	Endokardfibroelastose	1, 2	1, 2
I42.5	Sonstige restriktive Kardiomyopathie	1, 2	1, 2
I42.6	Alkoholische Kardiomyopathie	1, 2	1, 2
I42.7	Kardiomyopathie durch Arzneimittel oder sonstige exogene Substanzen	1, 2	1, 2
I42.80	Arrhythmogene rechtsventrikuläre Kardiomyopathie [ARVCM]	1, 2	1, 2
I42.88	Sonstige Kardiomyopathien	1, 2	1, 2
I43.0	Kardiomyopathie bei anderenorts klassifizierten infektiösen und parasitären Krankheiten	1, 2, 3	1, 2
I43.1	Kardiomyopathie bei Stoffwechselkrankheiten	2, 3, 4	3
I43.2	Kardiomyopathie bei alimentären Krankheiten	2, 3, 4	3
I43.8	Kardiomyopathie bei sonstigen anderenorts klassifizierten Krankheiten	1, 2, 3	1, 2
I44.1	Atrioventrikulärer Block 2. Grades	2, 3	1, 2, 3
I44.2	Atrioventrikulärer Block 3. Grades	2, 3	1, 2, 3
I45.3	Trifaszikulärer Block	2, 3	1, 2, 3
I45.5	Sonstiger näher bezeichneter Herzblock	2, 3	1, 2, 3
I45.6	Präexzitations-Syndrom	2, 3	1, 2, 3
I46.0	Herzstillstand mit erfolgreicher Wiederbelebung	2, 3	1, 2, 3
I46.9	Herzstillstand, nicht näher bezeichnet	2, 3	1, 2, 3
I47.1	Supraventrikuläre Tachykardie	2, 3	2, 3
I47.2	Ventrikuläre Tachykardie	2, 3	1, 2, 3
I48.3	Vorhofflattern, typisch	2, 3	2, 3
I48.4	Vorhofflattern, atypisch	2, 3	2, 3
I49.0	Kammerflattern und Kammerflimmern	2, 3	1, 2, 3
I50.00	Primäre Rechtsherzinsuffizienz	2, 3, 4	2, 3
I50.01	Sekundäre Rechtsherzinsuffizienz	2, 3, 4	2, 3
I50.13	Linksherzinsuffizienz: Mit Beschwerden bei leichterer Belastung	2, 3, 4	2, 3
I50.14	Linksherzinsuffizienz: Mit Beschwerden in Ruhe	2, 3, 4	2, 3
I51.0	Herzseptumdefekt, erworben	1, 2, 3	1, 2
I51.1	Ruptur der Chordae tendineae, anderenorts nicht klassifiziert	2, 3	2, 3
I51.2	Papillarmuskelruptur, anderenorts nicht klassifiziert	2, 3	2, 3
I51.3	Intrakardiale Thrombose, anderenorts nicht klassifiziert	1, 2, 3	1, 2
I60.0	Subarachnoidalblutung, vom Karotissiphon oder der Karotisbifurkation ausgehend	3, 4	2, 3
I60.1	Subarachnoidalblutung, von der A. cerebri media ausgehend	3, 4	2, 3
I60.2	Subarachnoidalblutung, von der A. communicans anterior ausgehend	3, 4	2, 3
I60.3	Subarachnoidalblutung, von der A. communicans posterior ausgehend	3, 4	2, 3

ICD	Beschreibung	OP CCL	Med. CCL
I60.4	Subarachnoidalblutung, von der A. basilaris ausgehend	3, 4	2, 3
I60.5	Subarachnoidalblutung, von der A. vertebralis ausgehend	3, 4	2, 3
I60.6	Subarachnoidalblutung, von sonstigen intrakraniellen Arterien ausgehend	3, 4	2, 3
I60.7	Subarachnoidalblutung, von nicht näher bezeichneter intrakranieller Arterie ausgehend	3, 4	2, 3
I60.8	Sonstige Subarachnoidalblutung	3, 4	2, 3
I60.9	Subarachnoidalblutung, nicht näher bezeichnet	3, 4	2, 3
I61.0	Intrazerebrale Blutung in die Großhirnhemisphäre, subkortikal	3, 4	2, 3
I61.1	Intrazerebrale Blutung in die Großhirnhemisphäre, kortikal	3, 4	2, 3
I61.3	Intrazerebrale Blutung in den Hirnstamm	3, 4	2, 3
I61.4	Intrazerebrale Blutung in das Kleinhirn	3, 4	2, 3
I61.5	Intrazerebrale intraventrikuläre Blutung	3, 4	2, 3
I61.6	Intrazerebrale Blutung an mehreren Lokalisationen	3, 4	2, 3
I61.8	Sonstige intrazerebrale Blutung	3, 4	2, 3
I62.00	Nichttraumatische subdurale Blutung: Akut	3, 4	2, 3
I62.01	Nichttraumatische subdurale Blutung: Subakut	3, 4	2, 3
I62.02	Nichttraumatische subdurale Blutung: Chronisch	3, 4	2, 3
I62.1	Nichttraumatische extradurale Blutung	3, 4	2, 3
I63.0	Hirninfarkt durch Thrombose präzerebraler Arterien	3, 4	2, 3
I63.1	Hirninfarkt durch Embolie präzerebraler Arterien	3, 4	2, 3
I63.2	Hirninfarkt durch nicht näher bezeichneten Verschluss oder Stenose präzerebraler Arterien	3, 4	2, 3
I63.3	Hirninfarkt durch Thrombose zerebraler Arterien	3, 4	2, 3
I63.4	Hirninfarkt durch Embolie zerebraler Arterien	3, 4	2, 3
I63.5	Hirninfarkt durch nicht näher bezeichneten Verschluss oder Stenose zerebraler Arterien	3, 4	2, 3
I63.6	Hirninfarkt durch Thrombose der Hirnvenen, nichteitrig	1, 2	2
I63.8	Sonstiger Hirninfarkt	3, 4	2, 3
I64	Schlaganfall, nicht als Blutung oder Infarkt bezeichnet	3, 4	2, 3
I65.0	Verschluss und Stenose der A. vertebralis	2, 3, 4	1, 2, 3
I65.1	Verschluss und Stenose der A. basilaris	2, 3, 4	1, 2, 3
I65.2	Verschluss und Stenose der A. carotis	1, 2, 3	2, 3
I65.3	Verschluss und Stenose mehrerer und beidseitiger präzerebraler Arterien	2, 3, 4	1, 2, 3
I66.0	Verschluss und Stenose der A. cerebri media	3, 4	2, 3
I66.1	Verschluss und Stenose der A. cerebri anterior	2, 3	2, 3
I66.2	Verschluss und Stenose der A. cerebri posterior	2, 3	2, 3
I66.3	Verschluss und Stenose der Aa. cerebelli	2, 3	2, 3
I66.4	Verschluss und Stenose mehrerer und beidseitiger zerebraler Arterien	3, 4	2, 3
I66.8	Verschluss und Stenose sonstiger zerebraler Arterien	3, 4	2, 3
I67.0	Dissektion zerebraler Arterien	1, 2	1, 2
I67.11	Zerebrale arteriovenöse Fistel (erworben)	3, 4	2, 3
I67.4	Hypertensive Enzephalopathie	2	1, 2
I67.5	Moyamoya-Syndrom	1, 2	2
I67.6	Nichteitrige Thrombose des intrakraniellen Venensystems	1, 2	2
I67.80	Vasospasmen bei Subarachnoidalblutung	3, 4	2, 3
I69.0	Folgen einer Subarachnoidalblutung	2	2
I69.1	Folgen einer intrazerebralen Blutung	2	2
I69.2	Folgen einer sonstigen nichttraumatischen intrakraniellen Blutung	2	2
I69.3	Folgen eines Hirninfarktes	2	2
I70.24	Atherosklerose der Extremitätenarterien: Becken-Bein-Typ, mit Ulzeration	2, 3	2, 3
I70.25	Atherosklerose der Extremitätenarterien: Becken-Bein-Typ, mit Gangrän	2, 3	2, 3
I71.01	Dissektion der Aorta thoracica, ohne Angabe einer Ruptur	3, 4	3
I71.02	Dissektion der Aorta abdominalis, ohne Angabe einer Ruptur	3, 4	3
I71.03	Dissektion der Aorta, thorakoabdominal, ohne Angabe einer Ruptur	3, 4	3
I71.04	Dissektion der Aorta nicht näher bezeichneter Lokalisation, rupturiert	3, 4	3
I71.05	Dissektion der Aorta thoracica, rupturiert	3, 4	3
I71.06	Dissektion der Aorta abdominalis, rupturiert	3, 4	3
I71.07	Dissektion der Aorta, thorakoabdominal, rupturiert	3, 4	3
I71.1	Aneurysma der Aorta thoracica, rupturiert	3, 4	3
I71.3	Aneurysma der Aorta abdominalis, rupturiert	3, 4	3
I71.5	Aortenaneurysma, thorakoabdominal, rupturiert	3, 4	3
I71.8	Aortenaneurysma nicht näher bezeichneter Lokalisation, rupturiert	3, 4	3
I72.0	Aneurysma und Dissektion der A. carotis	3, 4	3
I73.0	Raynaud-Syndrom	1, 2	1, 2
I74.0	Embolie und Thrombose der Aorta abdominalis	2, 3, 4	2, 3
I74.1	Embolie und Thrombose sonstiger und nicht näher bezeichneter Abschnitte der Aorta	2, 3, 4	2, 3
I74.2	Embolie und Thrombose der Arterien der oberen Extremitäten	2, 3, 4	2, 3

ICD	Beschreibung	OP CCL	Med. CCL
I74.3	Embolie und Thrombose der Arterien der unteren Extremitäten	2, 3, 4	2, 3
I74.5	Embolie und Thrombose der A. iliaca	2, 3, 4	2, 3
I74.8	Embolie und Thrombose sonstiger Arterien	2, 3, 4	2, 3
I80.1	Thrombose, Phlebitis und Thrombophlebitis der V. femoralis	2, 3, 4	2, 3
I80.20	Thrombose, Phlebitis und Thrombophlebitis der Beckenvenen	2, 3, 4	2, 3
I80.28	Thrombose, Phlebitis und Thrombophlebitis sonstiger tiefer Gefäße der unteren Extremitäten	2, 3, 4	2, 3
I80.80	Thrombose, Phlebitis und Thrombophlebitis oberflächlicher Gefäße der oberen Extremitäten	2, 3, 4	2, 3
I80.81	Thrombose, Phlebitis und Thrombophlebitis tiefer Gefäße der oberen Extremitäten	2, 3, 4	2, 3
I81	Pfortaderthrombose	1, 2, 3	1, 2, 3
I82.0	Budd-Chiari-Syndrom	1, 2, 3	1, 2, 3
I82.1	Thrombophlebitis migrans	2, 3, 4	2, 3
I82.2	Embolie und Thrombose der V. cava	2, 3, 4	2, 3
I82.80	Embolie und Thrombose der Milzvene	2, 3, 4	2, 3
I82.81	Embolie und Thrombose der Jugularisvene	2, 3, 4	2, 3
I82.88	Embolie und Thrombose sonstiger näher bezeichneter Venen	2, 3, 4	2, 3
I83.0	Varizen der unteren Extremitäten mit Ulzeration	1, 2	1, 2
I83.2	Varizen der unteren Extremitäten mit Ulzeration und Entzündung	1, 2	1, 2
I85.0	Ösophagusvarizen mit Blutung	1, 2, 3, 4	2, 3
I87.01	Postthrombotisches Syndrom mit Ulzeration	2, 3, 4	1, 2, 3
I87.21	Venöse Insuffizienz (chronisch) (peripher) mit Ulzeration	2, 3, 4	1, 2, 3
I97.0	Postkardiotomie-Syndrom	1, 2, 3	1, 2
I97.1	Sonstige Funktionsstörungen nach kardiochirurgischem Eingriff	1, 2, 3	1, 2
I98.2	Ösophagus- und Magenvarizen bei anderenorts klassifizierten Krankheiten, ohne Angabe einer Blutung	3, 4	3
I98.3	Ösophagus- und Magenvarizen bei anderenorts klassifizierten Krankheiten, mit Angabe einer Blutung	3, 4	3
J01.0	Akute Sinusitis maxillaris	2	2
J01.1	Akute Sinusitis frontalis	2	2
J01.2	Akute Sinusitis ethmoidalis	2	2
J01.3	Akute Sinusitis sphenoidalis	2	2
J01.4	Akute Pansinusitis	2	2
J01.8	Sonstige akute Sinusitis	1, 2	1, 2
J05.0	Akute obstruktive Laryngitis [Krupp]	2	2
J05.1	Akute Epiglottitis	2	2
J09	Grippe durch zoonotische oder pandemische nachgewiesene Influenzaviren	2, 3, 4	2, 3
J10.0	Grippe mit Pneumonie, saisonale Influenzaviren nachgewiesen	2, 3, 4	2, 3
J10.1	Grippe mit sonstigen Manifestationen an den Atemwegen, saisonale Influenzaviren nachgewiesen	2	2
J11.0	Grippe mit Pneumonie, Viren nicht nachgewiesen	2, 3, 4	2, 3
J11.1	Grippe mit sonstigen Manifestationen an den Atemwegen, Viren nicht nachgewiesen	2	2
J12.0	Pneumonie durch Adenoviren	2, 3, 4	2, 3
J12.1	Pneumonie durch Respiratory-Syncytial-Viren [RS-Viren]	2, 3, 4	2, 3
J12.2	Pneumonie durch Parainfluenzaviren	2, 3, 4	2, 3
J12.3	Pneumonie durch humanes Metapneumovirus	2, 3, 4	2, 3
J12.8	Pneumonie durch sonstige Viren	2, 3, 4	2, 3
J13	Pneumonie durch Streptococcus pneumoniae	2, 3, 4	2, 3
J14	Pneumonie durch Haemophilus influenzae	2, 3, 4	2, 3
J15.0	Pneumonie durch Klebsiella pneumoniae	3, 4	3
J15.1	Pneumonie durch Pseudomonas	3, 4	3
J15.2	Pneumonie durch Staphylokokken	3, 4	3
J15.3	Pneumonie durch Streptokokken der Gruppe B	2, 3, 4	2, 3
J15.4	Pneumonie durch sonstige Streptokokken	2, 3, 4	2, 3
J15.5	Pneumonie durch Escherichia coli	3, 4	3
J15.6	Pneumonie durch andere gramnegative Bakterien	3, 4	3
J15.7	Pneumonie durch Mycoplasma pneumoniae	2, 3, 4	2, 3
J15.8	Sonstige bakterielle Pneumonie	3, 4	3
J15.9	Bakterielle Pneumonie, nicht näher bezeichnet		1
J16.0	Pneumonie durch Chlamydien	2, 3, 4	2, 3
J16.8	Pneumonie durch sonstige näher bezeichnete Infektionserreger	2, 3, 4	2, 3
J17.0	Pneumonie bei anderenorts klassifizierten bakteriellen Krankheiten	3, 4	3
J17.1	Pneumonie bei anderenorts klassifizierten Viruskrankheiten	3, 4	3
J17.2	Pneumonie bei Mykosen	3, 4	3
J17.3	Pneumonie bei parasitären Krankheiten	3, 4	3
J18.0	Bronchopneumonie, nicht näher bezeichnet	2	2
J18.1	Lobärpneumonie, nicht näher bezeichnet	2	2
J18.2	Hypostatische Pneumonie, nicht näher bezeichnet	2	2
J18.8	Sonstige Pneumonie, Erreger nicht näher bezeichnet	2	2
J18.9	Pneumonie, nicht näher bezeichnet		1
J20.0	Akute Bronchitis durch Mycoplasma pneumoniae	2	1, 2
J20.1	Akute Bronchitis durch Haemophilus influenzae	2	1, 2
J20.2	Akute Bronchitis durch Streptokokken	2	1, 2

ICD	Beschreibung	OP CCL	Med. CCL
J20.3	Akute Bronchitis durch Coxsackieviren	2	1, 2
J20.4	Akute Bronchitis durch Parainfluenzaviren	2	1, 2
J20.5	Akute Bronchitis durch Respiratory-Syncytial-Viren [RS-Viren]	2	1, 2
J20.6	Akute Bronchitis durch Rhinoviren	2	1, 2
J20.7	Akute Bronchitis durch ECHO-Viren	2	1, 2
J20.8	Akute Bronchitis durch sonstige näher bezeichnete Erreger	2	1, 2
J20.9	Akute Bronchitis, nicht näher bezeichnet	2	1, 2
J36	Peritonsillarabszess	2	2
J38.01	Lähmung der Stimmlippen und des Kehlkopfes: Einseitig, partiell	2	2
J38.02	Lähmung der Stimmlippen und des Kehlkopfes: Einseitig, komplett	2	2
J38.03	Lähmung der Stimmlippen und des Kehlkopfes: Beidseitig, partiell	2	2
J38.4	Larynxödem	2	2
J39.0	Retropharyngealabszess und Parapharyngealabszess	2	2
J41.1	Schleimig-eitrige chronische Bronchitis	2, 3	2, 3
J41.8	Mischformen von einfacher und schleimig-eitriger chronischer Bronchitis	2, 3	2, 3
J42	Nicht näher bezeichnete chronische Bronchitis	1	1
J43.0	McLeod-Syndrom	2, 3	2, 3
J43.1	Panlobuläres Emphysem	2, 3	2, 3
J43.2	Zentrilobuläres Emphysem	2, 3	2, 3
J43.8	Sonstiges Emphysem	2, 3	2, 3
J44.00	Chronische obstruktive Lungenkrankheit mit akuter Infektion der unteren Atemwege: FEV1 <35 % des Sollwertes	2, 3	2, 3
J44.01	Chronische obstruktive Lungenkrankheit mit akuter Infektion der unteren Atemwege: FEV1 >=35 % und <50 % des Sollwertes	2, 3	2, 3
J44.02	Chronische obstruktive Lungenkrankheit mit akuter Infektion der unteren Atemwege: FEV1 >=50 % und <70 % des Sollwertes	2, 3	2, 3
J44.03	Chronische obstruktive Lungenkrankheit mit akuter Infektion der unteren Atemwege: FEV1 >=70 % des Sollwertes	2	1, 2
J44.10	Chronische obstruktive Lungenkrankheit mit akuter Exazerbation, nicht näher bezeichnet: FEV1 <35 % des Sollwertes	2, 3	2, 3
J44.11	Chronische obstruktive Lungenkrankheit mit akuter Exazerbation, nicht näher bezeichnet: FEV1 >=35 % und <50 % des Sollwertes	2, 3	2, 3
J44.80	Sonstige näher bezeichnete chronische obstruktive Lungenkrankheit: FEV1 <35 % des Sollwertes	2, 3	2, 3
J44.81	Sonstige näher bezeichnete chronische obstruktive Lungenkrankheit: FEV1 >=35 % und <50 % des Sollwertes	2, 3	2, 3
J46	Status asthmaticus	2	1, 2
J47	Bronchiektasen	2, 3	2, 3
J65	Pneumokoniose in Verbindung mit Tuberkulose	2	2
J67.0	Farmerlunge	2	2
J67.1	Bagassose	2	2
J67.2	Vogelzüchterlunge	2	2
J67.3	Suberose	2	2
J67.4	Malzarbeiter-Lunge	2	2
J67.5	Pilzarbeiter-Lunge	2	2
J67.6	Ahornrindenschäler-Lunge	2	2
J67.7	Befeuchter- und Klimaanlage-Lunge	2	2
J67.8	Allergische Alveolitis durch organische Stäube	2	2
J68.0	Bronchitis und Pneumonie durch chemische Substanzen, Gase, Rauch und Dämpfe	2, 3	1, 2
J68.1	Lungenödem durch chemische Substanzen, Gase, Rauch und Dämpfe	2, 3, 4	2, 3
J69.0	Pneumonie durch Nahrung oder Erbrochenes	3, 4	3
J69.1	Pneumonie durch Öle und Extrakte	3, 4	3
J69.8	Pneumonie durch sonstige feste und flüssige Substanzen	3, 4	3
J70.0	Akute Lungenbeteiligung bei Strahleneinwirkung	2, 3	1, 2
J70.1	Chronische und sonstige Lungenbeteiligung bei Strahleneinwirkung	2	2
J70.2	Akute arzneimittelinduzierte interstitielle Lungenkrankheiten	2, 3	1, 2
J70.3	Chronische arzneimittelinduzierte interstitielle Lungenkrankheiten	2, 3	1, 2
J80.01	Atemnotsyndrom des Erwachsenen [ARDS]: Mildes Atemnotsyndrom des Erwachsenen [ARDS]	1, 2	1, 2
J80.02	Atemnotsyndrom des Erwachsenen [ARDS]: Moderates Atemnotsyndrom des Erwachsenen [ARDS]	1, 2	1, 2
J80.03	Atemnotsyndrom des Erwachsenen [ARDS]: Schweres Atemnotsyndrom des Erwachsenen [ARDS]	1, 2	1, 2
J80.09	Atemnotsyndrom des Erwachsenen [ARDS]: Atemnotsyndrom des Erwachsenen [ARDS], Schweregrad nicht näher bezeichnet	1, 2	1, 2
J81	Lungenödem	2, 3, 4	2, 3
J84.0	Alveoläre und parietoalveoläre Krankheitszustände	2	2
J84.1	Sonstige interstitielle Lungenkrankheiten mit Fibrose	2	2
J84.8	Sonstige näher bezeichnete interstitielle Lungenkrankheiten	2	2

ICD	Beschreibung	OP CCL	Med. CCL
J85.0	Gangrän und Nekrose der Lunge	3, 4	3
J85.1	Abszess der Lunge mit Pneumonie	3, 4	3
J85.2	Abszess der Lunge ohne Pneumonie	3, 4	3
J85.3	Abszess des Mediastinums	3, 4	3
J86.0	Pyothorax mit Fistel	3, 4	3
J86.9	Pyothorax ohne Fistel	3, 4	3
J90	Pleuraerguss, anderenorts nicht klassifiziert	2	2
J91	Pleuraerguss bei anderenorts klassifizierten Krankheiten	2	2
J93.0	Spontaner Spannungspneumothorax	1, 2, 3	2, 3
J93.1	Sonstiger Spontanpneumothorax	1, 2, 3	2, 3
J93.8	Sonstiger Pneumothorax	1, 2, 3	2, 3
J93.9	Pneumothorax, nicht näher bezeichnet	1, 2, 3	2, 3
J94.0	Chylöser (Pleura-) Erguss	2, 3, 4	2, 3
J94.1	Fibrothorax	2, 3, 4	2, 3
J94.2	Hämatothorax	2, 3, 4	2, 3
J95.0	Funktionsstörung eines Tracheostomas	3, 4	1, 3
J95.1	Akute pulmonale Insuffizienz nach Thoraxoperation	3	2
J95.2	Akute pulmonale Insuffizienz nach nicht am Thorax vorgenommener Operation	3	2
J95.3	Chronische pulmonale Insuffizienz nach Operation	3	2
J95.4	Mendelson-Syndrom	3, 4	1, 3
J95.5	Subglottische Stenose nach medizinischen Maßnahmen	3, 4	1, 3
J95.80	Iatrogener Pneumothorax	3, 4	1, 3
J95.81	Stenose der Trachea nach medizinischen Maßnahmen	3, 4	1, 3
J95.82	Insuffizienzen von Anastomosen und Nähten nach Operationen an Trachea, Bronchien und Lunge	1, 2	1
J95.88	Sonstige Krankheiten der Atemwege nach medizinischen Maßnahmen	1, 2	1
J96.00	Akute respiratorische Insuffizienz, anderenorts nicht klassifiziert: Typ I [hypoxisch]	1, 2, 3	1, 2, 3
J96.01	Akute respiratorische Insuffizienz, anderenorts nicht klassifiziert: Typ II [hyperkapnisch]	1, 2, 3	1, 2, 3
J96.09	Akute respiratorische Insuffizienz, anderenorts nicht klassifiziert: Typ nicht näher bezeichnet	2	2
J96.10	Chronische respiratorische Insuffizienz, anderenorts nicht klassifiziert: Typ I [hypoxisch]	1, 2, 3	1, 2, 3
J96.11	Chronische respiratorische Insuffizienz, anderenorts nicht klassifiziert: Typ II [hyperkapnisch]	1, 2, 3	1, 2, 3
J98.10	Dystelektase	1, 2	1, 2
J98.11	Partielle Atelektase	1, 2	1, 2
J98.12	Totalatelektase	1, 2	1, 2
J98.18	Sonstiger und nicht näher bezeichneter Lungenkollaps	1, 2	1, 2
J98.2	Interstitielles Emphysem	1, 2	1, 2

ICD	Beschreibung	OP CCL	Med. CCL
J99.0	Lungenkrankheit bei seropositiver chronischer Polyarthritis {M05.1-}	2	2
J99.1	Krankheiten der Atemwege bei sonstigen diffusen Bindegewebskrankheiten	2	2
J99.21	Stadium 1 der chronischen Lungen-Graft-versus-Host-Krankheit {T86.06}	2	2
J99.22	Stadium 2 der chronischen Lungen-Graft-versus-Host-Krankheit {T86.07}	2	2
J99.23	Stadium 3 der chronischen Lungen-Graft-versus-Host-Krankheit {T86.07}	2	2
J99.8	Krankheiten der Atemwege bei sonstigen anderenorts klassifizierten Krankheiten	2	2
K11.3	Speicheldrüsenabszess	2	2
K11.4	Speicheldrüsenfistel	2	2
K12.20	Mund- (Boden-) Phlegmone	2, 3	2, 3
K12.21	Submandibularabszess ohne Angabe einer Ausbreitung nach mediastinal, parapharyngeal oder zervikal	2, 3	2, 3
K12.22	Submandibularabszess mit Ausbreitung nach mediastinal, parapharyngeal oder zervikal	2, 3	2, 3
K12.23	Wangenabszess	2, 3	2, 3
K12.28	Sonstige Phlegmone und Abszess des Mundes	2, 3	2, 3
K22.3	Perforation des Ösophagus	2, 4	2, 3
K22.6	Mallory-Weiss-Syndrom	1, 2, 3, 4	2, 3
K23.0	Tuberkulose des Ösophagus {A18.8}	2, 4	2, 3
K25.0	Ulcus ventriculi: Akut, mit Blutung	1, 2, 3, 4	2, 3
K25.2	Ulcus ventriculi: Akut, mit Blutung und Perforation	1, 2, 3, 4	2, 3
K25.4	Ulcus ventriculi: Chronisch oder nicht näher bezeichnet, mit Blutung	1, 2, 3, 4	2, 3
K25.6	Ulcus ventriculi: Chronisch oder nicht näher bezeichnet, mit Blutung und Perforation	1, 2, 3, 4	2, 3
K26.0	Ulcus duodeni: Akut, mit Blutung	1, 2, 3, 4	2, 3
K26.2	Ulcus duodeni: Akut, mit Blutung und Perforation	1, 2, 3, 4	2, 3
K26.4	Ulcus duodeni: Chronisch oder nicht näher bezeichnet, mit Blutung	1, 2, 3, 4	2, 3
K26.6	Ulcus duodeni: Chronisch oder nicht näher bezeichnet, mit Blutung und Perforation	1, 2, 3, 4	2, 3
K27.0	Ulcus pepticum, Lokalisation nicht näher bezeichnet: Akut, mit Blutung	1, 2, 3, 4	2, 3
K27.2	Ulcus pepticum, Lokalisation nicht näher bezeichnet: Akut, mit Blutung und Perforation	1, 2, 3, 4	2, 3
K27.4	Ulcus pepticum, Lokalisation nicht näher bezeichnet: Chronisch oder nicht näher bezeichnet, mit Blutung	1, 2, 3, 4	2, 3
K27.6	Ulcus pepticum, Lokalisation nicht näher bezeichnet: Chronisch oder nicht näher bezeichnet, mit Blutung und Perforation	1, 2, 3, 4	2, 3

ICD	Beschreibung	OP CCL	Med. CCL
K28.0	Ulcus pepticum jejuni: Akut, mit Blutung	1, 2, 3, 4	2, 3
K28.2	Ulcus pepticum jejuni: Akut, mit Blutung und Perforation	1, 2, 3, 4	2, 3
K28.4	Ulcus pepticum jejuni: Chronisch oder nicht näher bezeichnet, mit Blutung	1, 2, 3, 4	2, 3
K28.6	Ulcus pepticum jejuni: Chronisch oder nicht näher bezeichnet, mit Blutung und Perforation	1, 2, 3, 4	2, 3
K29.0	Akute hämorrhagische Gastritis	1, 2, 3, 4	2, 3
K31.0	Akute Magendilatation	2, 4	2, 3
K31.5	Duodenalverschluss	2, 3	2
K31.6	Fistel des Magens und des Duodenums	2, 4	2, 3
K31.82	Angiodysplasie des Magens und des Duodenums mit Blutung	1, 2, 3, 4	2, 3
K35.2	Akute Appendizitis mit generalisierter Peritonitis	3, 4	3
K35.30	Akute Appendizitis mit lokalisierter Peritonitis ohne Perforation oder Ruptur	2, 4	2, 3
K35.31	Akute Appendizitis mit lokalisierter Peritonitis mit Perforation oder Ruptur	3, 4	3
K35.32	Akute Appendizitis mit Peritonealabszess	2, 4	2, 3
K35.8	Akute Appendizitis, nicht näher bezeichnet	2, 4	2, 3
K40.00	Doppelseitige Hernia inguinalis mit Einklemmung, ohne Gangrän: Nicht als Rezidivhernie bezeichnet	2, 4	2, 3
K40.01	Doppelseitige Hernia inguinalis mit Einklemmung, ohne Gangrän: Rezidivhernie	2, 4	2, 3
K40.10	Doppelseitige Hernia inguinalis mit Gangrän: Nicht als Rezidivhernie bezeichnet	2, 4	2, 3
K40.11	Doppelseitige Hernia inguinalis mit Gangrän: Rezidivhernie	2, 4	2, 3
K40.30	Hernia inguinalis, einseitig oder ohne Seitenangabe, mit Einklemmung, ohne Gangrän: Nicht als Rezidivhernie bezeichnet	2, 4	2, 3
K40.31	Hernia inguinalis, einseitig oder ohne Seitenangabe, mit Einklemmung, ohne Gangrän: Rezidivhernie	2, 4	2, 3
K40.40	Hernia inguinalis, einseitig oder ohne Seitenangabe, mit Gangrän: Nicht als Rezidivhernie bezeichnet	2, 4	2, 3
K40.41	Hernia inguinalis, einseitig oder ohne Seitenangabe, mit Gangrän: Rezidivhernie	2, 4	2, 3
K41.00	Doppelseitige Hernia femoralis mit Einklemmung, ohne Gangrän: Nicht als Rezidivhernie bezeichnet	2, 4	2, 3
K41.01	Doppelseitige Hernia femoralis mit Einklemmung, ohne Gangrän: Rezidivhernie	2, 4	2, 3
K41.10	Doppelseitige Hernia femoralis mit Gangrän: Nicht als Rezidivhernie bezeichnet	2, 4	2, 3
K41.11	Doppelseitige Hernia femoralis mit Gangrän: Rezidivhernie	2, 4	2, 3
K41.30	Hernia femoralis, einseitig oder ohne Seitenangabe, mit Einklemmung, ohne Gangrän: Nicht als Rezidivhernie bezeichnet	2, 4	2, 3
K41.31	Hernia femoralis, einseitig oder ohne Seitenangabe, mit Einklemmung, ohne Gangrän: Rezidivhernie	2, 4	2, 3
K41.40	Hernia femoralis, einseitig oder ohne Seitenangabe, mit Gangrän: Nicht als Rezidivhernie bezeichnet	2, 4	2, 3
K41.41	Hernia femoralis, einseitig oder ohne Seitenangabe, mit Gangrän: Rezidivhernie	2, 4	2, 3
K42.0	Hernia umbilicalis mit Einklemmung, ohne Gangrän	2, 4	2, 3
K42.1	Hernia umbilicalis mit Gangrän	2, 4	2, 3
K43.0	Narbenhernie mit Einklemmung, ohne Gangrän	2, 4	2, 3
K43.1	Narbenhernie mit Gangrän	2, 4	2, 3
K43.3	Parastomale Hernie mit Einklemmung, ohne Gangrän	2, 4	2, 3
K43.4	Parastomale Hernie mit Gangrän	2, 4	2, 3
K43.60	Epigastrische Hernie mit Einklemmung, ohne Gangrän	2, 4	2, 3
K43.68	Sonstige Hernia ventralis mit Einklemmung, ohne Gangrän	2, 4	2, 3
K43.69	Nicht näher bezeichnete Hernia ventralis mit Einklemmung, ohne Gangrän	2, 4	2, 3
K43.70	Epigastrische Hernie mit Gangrän	2, 4	2, 3
K43.78	Sonstige Hernia ventralis mit Gangrän	2, 4	2, 3
K43.79	Nicht näher bezeichnete Hernia ventralis mit Gangrän	2, 4	2, 3
K44.0	Hernia diaphragmatica mit Einklemmung, ohne Gangrän	2, 4	2, 3
K44.1	Hernia diaphragmatica mit Gangrän	2, 4	2, 3
K45.0	Sonstige näher bezeichnete abdominale Hernien mit Einklemmung, ohne Gangrän	2, 4	2, 3
K45.1	Sonstige näher bezeichnete abdominale Hernien mit Gangrän	2, 4	2, 3
K46.0	Nicht näher bezeichnete abdominale Hernie mit Einklemmung, ohne Gangrän	2, 4	2, 3
K46.1	Nicht näher bezeichnete abdominale Hernie mit Gangrän	2, 4	2, 3
K52.0	Gastroenteritis und Kolitis durch Strahleneinwirkung	2, 4	2, 3
K52.1	Toxische Gastroenteritis und Kolitis	2, 4	2, 3
K55.0	Akute Gefäßkrankheiten des Darmes	3, 4	3
K55.22	Angiodysplasie des Kolons: Mit Blutung	1, 2, 3, 4	2, 3
K56.0	Paralytischer Ileus	2, 3	2
K56.1	Invagination	2, 3	2
K56.2	Volvulus	2, 3	2
K56.3	Gallensteinileus	2, 3	2
K56.5	Intestinale Adhäsionen [Briden] mit Obstruktion	2, 3	2
K56.6	Sonstige und nicht näher bezeichnete intestinale Obstruktion	2, 3	2

ICD	Beschreibung	OP CCL	Med. CCL
K57.02	Divertikulitis des Dünndarmes mit Perforation und Abszess, ohne Angabe einer Blutung	2, 4	2, 3
K57.03	Divertikulitis des Dünndarmes mit Perforation, Abszess und Blutung	1, 2, 3, 4	2, 3
K57.11	Divertikulose des Dünndarmes ohne Perforation und Abszess, mit Blutung	1, 2, 3, 4	2, 3
K57.13	Divertikulitis des Dünndarmes ohne Perforation und Abszess, mit Blutung	1, 2, 3, 4	2, 3
K57.23	Divertikulitis des Dickdarmes mit Perforation, Abszess und Blutung	1, 2, 3, 4	2, 3
K57.31	Divertikulose des Dickdarmes ohne Perforation oder Abszess, mit Blutung	1, 2, 3, 4	2, 3
K57.33	Divertikulitis des Dickdarmes ohne Perforation oder Abszess, mit Blutung	1, 2, 3, 4	2, 3
K57.42	Divertikulitis sowohl des Dünndarmes als auch des Dickdarmes mit Perforation und Abszess, ohne Angabe einer Blutung	2, 4	2, 3
K57.43	Divertikulitis sowohl des Dünndarmes als auch des Dickdarmes mit Perforation, Abszess und Blutung	1, 2, 3, 4	2, 3
K57.51	Divertikulose sowohl des Dünndarmes als auch des Dickdarmes ohne Perforation oder Abszess, mit Blutung	1, 2, 3, 4	2, 3
K57.53	Divertikulitis sowohl des Dünndarmes als auch des Dickdarmes ohne Perforation oder Abszess, mit Blutung	1, 2, 3, 4	2, 3
K61.0	Analabszess	2, 4	2, 3
K61.1	Rektalabszess	2, 4	2, 3
K61.2	Anorektalabszess	2, 4	2, 3
K61.3	Ischiorektalabszess	2, 4	2, 3
K61.4	Intrasphinktärer Abszess	2, 4	2, 3
K62.50	Hämorrhagie des Anus	1, 2, 3	1, 2
K62.51	Hämorrhagie des Rektums	1, 2, 3	1, 2
K63.0	Darmabszess	2, 4	2, 3
K63.1	Perforation des Darmes (nichttraumatisch)	3, 4	3
K63.2	Darmfistel	2, 4	2, 3
K65.00	Spontane bakterielle Peritonitis [SBP] (akut)	3, 4	3
K65.09	Sonstige und nicht näher bezeichnete akute Peritonitis	3, 4	3
K65.8	Sonstige Peritonitis	3, 4	3
K66.1	Hämoperitoneum	2, 4	2, 3
K67.0	Chlamydienperitonitis {A74.8}	3, 4	3
K67.1	Gonokokkenperitonitis {A54.8}	3, 4	3
K67.2	Syphilitische Peritonitis {A52.7}	3, 4	3
K67.3	Tuberkulöse Peritonitis {A18.3}	3, 4	3
K67.8	Sonstige Krankheiten des Peritoneums bei anderenorts klassifizierten Infektionskrankheiten	3, 4	3
K70.2	Alkoholische Fibrose und Sklerose der Leber	1, 2	1, 2
K70.3	Alkoholische Leberzirrhose	1, 2	1, 2
K70.40	Akutes und subakutes alkoholisches Leberversagen	2, 3	2
K70.41	Chronisches alkoholisches Leberversagen	2, 3	2
K70.42	Akut-auf-chronisches alkoholisches Leberversagen	2, 3	2
K70.48	Sonstiges und nicht näher bezeichnetes alkoholisches Leberversagen	2, 3	2
K71.0	Toxische Leberkrankheit mit Cholestase	2, 3	2
K71.1	Toxische Leberkrankheit mit Lebernekrose	2, 3	2
K71.2	Toxische Leberkrankheit mit akuter Hepatitis	2, 3	2
K71.3	Toxische Leberkrankheit mit chronisch-persistierender Hepatitis	2, 3	2
K71.4	Toxische Leberkrankheit mit chronischer lobulärer Hepatitis	2, 3	2
K71.5	Toxische Leberkrankheit mit chronisch-aktiver Hepatitis	2, 3	2
K71.6	Toxische Leberkrankheit mit Hepatitis, anderenorts nicht klassifiziert	2, 3	2
K71.7	Toxische Leberkrankheit mit Fibrose und Zirrhose der Leber	2, 3	2
K71.80	Toxische veno-okklusive Leberkrankheit	2, 3	2
K71.88	Toxische Leberkrankheit mit sonstigen Affektionen der Leber	2, 3	2
K72.0	Akutes und subakutes Leberversagen, anderenorts nicht klassifiziert	1, 2, 3	1, 2, 3
K72.10	Akut-auf-chronisches Leberversagen, anderenorts nicht klassifiziert	1, 2, 3	1, 2, 3
K72.18	Sonstiges und nicht näher bezeichnetes chronisches Leberversagen, anderenorts nicht klassifiziert	1, 2, 3	1, 2, 3
K72.71	Hepatische Enzephalopathie Grad 1	1, 2, 3	1, 2, 3
K72.72	Hepatische Enzephalopathie Grad 2	1, 2, 3	1, 2, 3
K72.73	Hepatische Enzephalopathie Grad 3	1, 2, 3	1, 2, 3
K72.74	Hepatische Enzephalopathie Grad 4	1, 2, 3	1, 2, 3
K73.1	Chronische lobuläre Hepatitis, anderenorts nicht klassifiziert	1, 2, 3	1, 2, 3
K73.2	Chronische aktive Hepatitis, anderenorts nicht klassifiziert	1, 2, 3	1, 2, 3
K73.8	Sonstige chronische Hepatitis, anderenorts nicht klassifiziert	1, 2, 3	1, 2, 3
K74.0	Leberfibrose	1, 3	1
K74.2	Leberfibrose mit Lebersklerose	2, 3	2
K74.3	Primäre biliäre Cholangitis	2, 3	2
K74.4	Sekundäre biliäre Zirrhose	2, 3	2
K74.5	Biliäre Zirrhose, nicht näher bezeichnet	2, 3	2
K74.6	Sonstige und nicht näher bezeichnete Zirrhose der Leber	2, 3	2
K74.70	Leberzirrhose, Stadium Child-Pugh A	1, 2, 3	2
K74.71	Leberzirrhose, Stadium Child-Pugh B	1, 2, 3	2
K74.72	Leberzirrhose, Stadium Child-Pugh C	1, 2, 3	2
K75.0	Leberabszess	1, 2, 3	1, 2, 3
K75.1	Phlebitis der Pfortader	1, 2, 3	1, 2, 3
K75.2	Unspezifische reaktive Hepatitis	1, 2, 3	1, 2, 3
K75.3	Granulomatöse Hepatitis, anderenorts nicht klassifiziert	1, 2, 3	1, 2, 3

ICD	Beschreibung	OP CCL	Med. CCL
K75.4	Autoimmune Hepatitis	1, 2, 3	1, 2, 3
K75.8	Sonstige näher bezeichnete entzündliche Leberkrankheiten	1, 2, 3	1, 2, 3
K76.2	Zentrale hämorrhagische Lebernekrose	2	2
K76.3	Leberinfarkt	2	2
K76.4	Peliosis hepatis	2	2
K76.5	Veno-okklusive Leberkrankheit	2	2
K76.6	Portale Hypertonie	2	2
K76.7	Hepatorenales Syndrom	2	2
K77.0	Leberkrankheiten bei anderenorts klassifizierten infektiösen und parasitären Krankheiten	1, 2, 3	1, 2, 3
K77.11	Stadium 1 der akuten Leber-Graft-versus-Host-Krankheit {T86.01}	1, 2, 3	1, 2, 3
K77.12	Stadium 2 der akuten Leber-Graft-versus-Host-Krankheit {T86.02}	1, 2, 3	1, 2, 3
K77.13	Stadium 3 der akuten Leber-Graft-versus-Host-Krankheit {T86.02}	1, 2, 3	1, 2, 3
K77.14	Stadium 4 der akuten Leber-Graft-versus-Host-Krankheit {T86.02}	1, 2, 3	1, 2, 3
K77.21	Stadium 1 der chronischen Leber-Graft-versus-Host-Krankheit {T86.05}, {T86.06}	1, 2, 3	1, 2, 3
K77.22	Stadium 2 der chronischen Leber-Graft-versus-Host-Krankheit {T86.06}	1, 2, 3	1, 2, 3
K77.23	Stadium 3 der chronischen Leber-Graft-versus-Host-Krankheit {T86.07}	1, 2, 3	1, 2, 3
K77.8	Leberkrankheiten bei sonstigen anderenorts klassifizierten Krankheiten	1, 2, 3	1, 2, 3
K80.00	Gallenblasenstein mit akuter Cholezystitis: Ohne Angabe einer Gallenwegsobstruktion	2, 3, 4	2, 3
K80.01	Gallenblasenstein mit akuter Cholezystitis: Mit Gallenwegsobstruktion	2, 3, 4	2, 3
K80.10	Gallenblasenstein mit sonstiger Cholezystitis: Ohne Angabe einer Gallenwegsobstruktion	2, 3, 4	2, 3
K80.11	Gallenblasenstein mit sonstiger Cholezystitis: Mit Gallenwegsobstruktion	2, 3, 4	2, 3
K80.21	Gallenblasenstein ohne Cholezystitis: Mit Gallenwegsobstruktion	2, 3, 4	2, 3
K80.30	Gallengangsstein mit Cholangitis: Ohne Angabe einer Gallenwegsobstruktion	2, 3, 4	2, 3
K80.31	Gallengangsstein mit Cholangitis: Mit Gallenwegsobstruktion	2, 3, 4	2, 3
K80.40	Gallengangsstein mit Cholezystitis: Ohne Angabe einer Gallenwegsobstruktion	2, 3, 4	2, 3
K80.41	Gallengangsstein mit Cholezystitis: Mit Gallenwegsobstruktion	2, 3, 4	2, 3
K80.50	Gallengangsstein ohne Cholangitis oder Cholezystitis: Ohne Angabe einer Gallenwegsobstruktion	2, 3, 4	2, 3
K80.51	Gallengangsstein ohne Cholangitis oder Cholezystitis: Mit Gallenwegsobstruktion	2, 3, 4	2, 3
K80.80	Sonstige Cholelithiasis: Ohne Angabe einer Gallenwegsobstruktion	2, 3, 4	2, 3
K80.81	Sonstige Cholelithiasis: Mit Gallenwegsobstruktion	2, 3, 4	2, 3
K81.0	Akute Cholezystitis	2, 3, 4	2, 3
K82.0	Verschluss der Gallenblase	2, 3, 4	2, 3
K82.1	Hydrops der Gallenblase	2, 3, 4	2, 3
K82.2	Perforation der Gallenblase	2, 3, 4	2, 3
K82.3	Gallenblasenfistel	2, 3, 4	2, 3
K83.00	Primär sklerosierende Cholangitis	2, 3, 4	2, 3
K83.01	Sekundär sklerosierende Cholangitis	2, 3, 4	2, 3
K83.08	Sonstige Cholangitis	2, 3, 4	2, 3
K83.09	Cholangitis, nicht näher bezeichnet	2, 3, 4	2, 3
K83.2	Perforation des Gallenganges	2, 3, 4	2, 3
K83.3	Fistel des Gallenganges	2, 3, 4	2, 3
K85.00	Idiopathische akute Pankreatitis: Ohne Angabe einer Organkomplikation	2, 3	2
K85.01	Idiopathische akute Pankreatitis: Mit Organkomplikation	2, 3	2
K85.10	Biliäre akute Pankreatitis: Ohne Angabe einer Organkomplikation	2, 3	2
K85.11	Biliäre akute Pankreatitis: Mit Organkomplikation	2, 3	2
K85.20	Alkoholinduzierte akute Pankreatitis: Ohne Angabe einer Organkomplikation	2, 3	2
K85.21	Alkoholinduzierte akute Pankreatitis: Mit Organkomplikation	2, 3	2
K85.30	Medikamenten-induzierte akute Pankreatitis: Ohne Angabe einer Organkomplikation	2, 3	2
K85.31	Medikamenten-induzierte akute Pankreatitis: Mit Organkomplikation	2, 3	2
K85.80	Sonstige akute Pankreatitis: Ohne Angabe einer Organkomplikation	2, 3	2
K85.81	Sonstige akute Pankreatitis: Mit Organkomplikation	2, 3	2
K86.0	Alkoholinduzierte chronische Pankreatitis	2, 3	2
K86.1	Sonstige chronische Pankreatitis	2, 3	2
K86.2	Pankreaszyste	2, 3	2
K86.3	Pseudozyste des Pankreas	2, 3	2
K91.2	Malabsorption nach chirurgischem Eingriff, anderenorts nicht klassifiziert	1	1
K91.3	Postoperativer Darmverschluss	2, 3, 4	2
K91.4	Funktionsstörung nach Kolostomie oder Enterostomie	3, 4	3
K91.80	Generalisierte Mukositis bei Immunkompromittierung	3	3
K91.81	Insuffizienzen von Anastomosen und Nähten nach Operationen an Gallenblase und Gallenwegen	2, 4	2, 3
K91.82	Insuffizienzen von Anastomosen und Nähten nach Operationen am Pankreas	2, 4	2, 3

ICD	Beschreibung	OP CCL	Med. CCL
K91.83	Insuffizienzen von Anastomosen und Nähten nach Operationen am sonstigen Verdauungstrakt	2, 4	2, 3
K92.0	Hämatemesis	1, 2, 3, 4	2, 3
K92.1	Meläna	1, 2, 3, 4	2, 3
K93.0	Tuberkulose des Darmes, des Peritoneums und der Mesenteriallymphknoten {A18.3}	2, 4	2, 3
L03.10	Phlegmone an der oberen Extremität	2, 3, 4	2, 3
L03.11	Phlegmone an der unteren Extremität	2, 3, 4	2, 3
L03.2	Phlegmone im Gesicht	2, 3, 4	2, 3
L03.3	Phlegmone am Rumpf	2, 3, 4	2, 3
L05.0	Pilonidalzyste mit Abszess	2, 3, 4	2, 3
L10.0	Pemphigus vulgaris	2	2
L10.1	Pemphigus vegetans	2	2
L10.2	Pemphigus foliaceus	2	2
L10.3	Brasilianischer Pemphigus [fogo selvagem]	2	2
L10.4	Pemphigus erythematosus	2	2
L10.5	Arzneimittelinduzierter Pemphigus	2	2
L10.8	Sonstige Pemphiguskrankheiten	2	2
L10.9	Pemphiguskrankheit, nicht näher bezeichnet	2	2
L12.0	Bullöses Pemphigoid	2	2
L12.1	Vernarbendes Pemphigoid	2	2
L12.2	Chronisch-bullöse Dermatose des Kindesalters	2	2
L12.3	Erworbene Epidermolysis bullosa	2	2
L12.8	Sonstige Pemphigoidkrankheiten	2	2
L12.9	Pemphigoidkrankheit, nicht näher bezeichnet	2	2
L40.5	Psoriasis-Arthropathie {M07.0-M07.3}, {M09.0-}	1, 2	1, 2
L44.4	Infantile papulöse Akrodermatitis [Gianotti-Crosti-Syndrom]	2	2
L53.0	Erythema toxicum	2	2
L53.1	Erythema anulare centrifugum	2	2
L53.2	Erythema marginatum	2	2
L53.3	Sonstiges figuriertes chronisches Erythem	2	2
L89.10	Dekubitus, Stadium 2: Kopf	2, 3	2, 3
L89.11	Dekubitus, Stadium 2: Obere Extremität	2, 3	2, 3
L89.12	Dekubitus, Stadium 2: Dornfortsätze	2, 3	2, 3
L89.13	Dekubitus, Stadium 2: Beckenkamm	2, 3	2, 3
L89.14	Dekubitus, Stadium 2: Kreuzbein	2, 3	2, 3
L89.15	Dekubitus, Stadium 2: Sitzbein	2, 3	2, 3
L89.16	Dekubitus, Stadium 2: Trochanter	2, 3	2, 3
L89.17	Dekubitus, Stadium 2: Ferse	1	1
L89.18	Dekubitus, Stadium 2: Sonstige Lokalisationen der unteren Extremität	1	1
L89.20	Dekubitus, Stadium 3: Kopf	3, 4	2, 3
L89.21	Dekubitus, Stadium 3: Obere Extremität	3, 4	2, 3
L89.22	Dekubitus, Stadium 3: Dornfortsätze	3, 4	2, 3
L89.23	Dekubitus, Stadium 3: Beckenkamm	3, 4	2, 3
L89.24	Dekubitus, Stadium 3: Kreuzbein	3, 4	2, 3
L89.25	Dekubitus, Stadium 3: Sitzbein	3, 4	2, 3
L89.26	Dekubitus, Stadium 3: Trochanter	3, 4	2, 3
L89.27	Dekubitus, Stadium 3: Ferse	3, 4	2, 3
L89.28	Dekubitus, Stadium 3: Sonstige Lokalisationen der unteren Extremität	3, 4	2, 3
L89.29	Dekubitus, Stadium 3: Sonstige und nicht näher bezeichnete Lokalisationen	3, 4	2, 3
L89.30	Dekubitus, Stadium 4: Kopf	3, 4	2, 3
L89.31	Dekubitus, Stadium 4: Obere Extremität	3, 4	2, 3
L89.32	Dekubitus, Stadium 4: Dornfortsätze	3, 4	2, 3
L89.33	Dekubitus, Stadium 4: Beckenkamm	3, 4	2, 3
L89.34	Dekubitus, Stadium 4: Kreuzbein	3, 4	2, 3
L89.35	Dekubitus, Stadium 4: Sitzbein	3, 4	2, 3
L89.36	Dekubitus, Stadium 4: Trochanter	3, 4	2, 3
L89.37	Dekubitus, Stadium 4: Ferse	3, 4	2, 3
L89.38	Dekubitus, Stadium 4: Sonstige Lokalisationen der unteren Extremität	3, 4	2, 3
L89.39	Dekubitus, Stadium 4: Sonstige und nicht näher bezeichnete Lokalisationen	3, 4	2, 3
L94.4	Gottron-Papeln	1, 2	1, 2
L98.3	Eosinophile Zellulitis [Wells-Syndrom]	2, 3, 4	2, 3
L98.4	Chronisches Ulkus der Haut, anderenorts nicht klassifiziert	1, 2	1, 2
L99.13	Stadium 3 der akuten Haut-Graft-versus-Host-Krankheit	3, 4	3
L99.14	Stadium 4 der akuten Haut-Graft-versus-Host-Krankheit	3, 4	3
M00.00	Arthritis und Polyarthritis durch Staphylokokken: Mehrere Lokalisationen	2, 4	2
M00.01	Arthritis und Polyarthritis durch Staphylokokken: Schulterregion	2, 4	2
M00.02	Arthritis und Polyarthritis durch Staphylokokken: Oberarm	2, 4	2
M00.03	Arthritis und Polyarthritis durch Staphylokokken: Unterarm	2, 4	2
M00.04	Arthritis und Polyarthritis durch Staphylokokken: Hand	2, 4	2
M00.05	Arthritis und Polyarthritis durch Staphylokokken: Beckenregion und Oberschenkel	2, 4	2
M00.06	Arthritis und Polyarthritis durch Staphylokokken: Unterschenkel	2, 4	2
M00.07	Arthritis und Polyarthritis durch Staphylokokken: Knöchel und Fuß	2, 4	2
M00.08	Arthritis und Polyarthritis durch Staphylokokken: Sonstige	2, 4	2
M00.10	Arthritis und Polyarthritis durch Pneumokokken: Mehrere Lokalisationen	2, 4	2
M00.11	Arthritis und Polyarthritis durch Pneumokokken: Schulterregion	2, 4	2
M00.12	Arthritis und Polyarthritis durch Pneumokokken: Oberarm	2, 4	2
M00.13	Arthritis und Polyarthritis durch Pneumokokken: Unterarm	2, 4	2
M00.14	Arthritis und Polyarthritis durch Pneumokokken: Hand	2, 4	2

ICD	Beschreibung	OP CCL	Med. CCL
M00.15	Arthritis und Polyarthritis durch Pneumokokken: Beckenregion und Oberschenkel	2, 4	2
M00.16	Arthritis und Polyarthritis durch Pneumokokken: Unterschenkel	2, 4	2
M00.17	Arthritis und Polyarthritis durch Pneumokokken: Knöchel und Fuß	2, 4	2
M00.18	Arthritis und Polyarthritis durch Pneumokokken: Sonstige	2, 4	2
M00.20	Arthritis und Polyarthritis durch sonstige Streptokokken: Mehrere Lokalisationen	2, 4	2
M00.21	Arthritis und Polyarthritis durch sonstige Streptokokken: Schulterregion	2, 4	2
M00.22	Arthritis und Polyarthritis durch sonstige Streptokokken: Oberarm	2, 4	2
M00.23	Arthritis und Polyarthritis durch sonstige Streptokokken: Unterarm	2, 4	2
M00.24	Arthritis und Polyarthritis durch sonstige Streptokokken: Hand	2, 4	2
M00.25	Arthritis und Polyarthritis durch sonstige Streptokokken: Beckenregion und Oberschenkel	2, 4	2
M00.26	Arthritis und Polyarthritis durch sonstige Streptokokken: Unterschenkel	2, 4	2
M00.27	Arthritis und Polyarthritis durch sonstige Streptokokken: Knöchel und Fuß	2, 4	2
M00.28	Arthritis und Polyarthritis durch sonstige Streptokokken: Sonstige	2, 4	2
M00.90	Eitrige Arthritis, nicht näher bezeichnet: Mehrere Lokalisationen	2, 4	2
M00.91	Eitrige Arthritis, nicht näher bezeichnet: Schulterregion	2, 4	2
M00.92	Eitrige Arthritis, nicht näher bezeichnet: Oberarm	2, 4	2
M00.93	Eitrige Arthritis, nicht näher bezeichnet: Unterarm	2, 4	2
M00.94	Eitrige Arthritis, nicht näher bezeichnet: Hand	2, 4	2
M00.95	Eitrige Arthritis, nicht näher bezeichnet: Beckenregion und Oberschenkel	2, 4	2
M00.96	Eitrige Arthritis, nicht näher bezeichnet: Unterschenkel	2, 4	2
M00.97	Eitrige Arthritis, nicht näher bezeichnet: Knöchel und Fuß	2, 4	2
M00.98	Eitrige Arthritis, nicht näher bezeichnet: Sonstige	2, 4	2
M01.00	Arthritis durch Meningokokken {A39.8}: Mehrere Lokalisationen	2, 4	2
M01.01	Arthritis durch Meningokokken {A39.8}: Schulterregion	2, 4	2
M01.02	Arthritis durch Meningokokken {A39.8}: Oberarm	2, 4	2
M01.03	Arthritis durch Meningokokken {A39.8}: Unterarm	2, 4	2
M01.04	Arthritis durch Meningokokken {A39.8}: Hand	2, 4	2
M01.05	Arthritis durch Meningokokken {A39.8}: Beckenregion und Oberschenkel	2, 4	2
M01.06	Arthritis durch Meningokokken {A39.8}: Unterschenkel	2, 4	2
M01.07	Arthritis durch Meningokokken {A39.8}: Knöchel und Fuß	2, 4	2
M01.08	Arthritis durch Meningokokken {A39.8}: Sonstige	2, 4	2
M01.60	Arthritis bei Mykosen {B35-B49}: Mehrere Lokalisationen	2, 4	2
M01.61	Arthritis bei Mykosen {B35-B49}: Schulterregion	2, 4	2
M01.62	Arthritis bei Mykosen {B35-B49}: Oberarm	2, 4	2
M01.63	Arthritis bei Mykosen {B35-B49}: Unterarm	2, 4	2
M01.64	Arthritis bei Mykosen {B35-B49}: Hand	2, 4	2
M01.65	Arthritis bei Mykosen {B35-B49}: Beckenregion und Oberschenkel	2, 4	2
M01.66	Arthritis bei Mykosen {B35-B49}: Unterschenkel	2, 4	2
M01.67	Arthritis bei Mykosen {B35-B49}: Knöchel und Fuß	2, 4	2
M01.68	Arthritis bei Mykosen {B35-B49}: Sonstige	2, 4	2
M05.00	Felty-Syndrom: Mehrere Lokalisationen	1, 2	1, 2
M05.01	Felty-Syndrom: Schulterregion	1, 2	1, 2
M05.02	Felty-Syndrom: Oberarm	1, 2	1, 2
M05.03	Felty-Syndrom: Unterarm	1, 2	1, 2
M05.04	Felty-Syndrom: Hand	1, 2	1, 2
M05.05	Felty-Syndrom: Beckenregion und Oberschenkel	1, 2	1, 2
M05.06	Felty-Syndrom: Unterschenkel	1, 2	1, 2
M05.07	Felty-Syndrom: Knöchel und Fuß	1, 2	1, 2
M05.08	Felty-Syndrom: Sonstige	1, 2	1, 2
M05.20	Vaskulitis bei seropositiver chronischer Polyarthritis: Mehrere Lokalisationen	1, 2	1, 2
M05.21	Vaskulitis bei seropositiver chronischer Polyarthritis: Schulterregion	1, 2	1, 2
M05.22	Vaskulitis bei seropositiver chronischer Polyarthritis: Oberarm	1, 2	1, 2
M05.23	Vaskulitis bei seropositiver chronischer Polyarthritis: Unterarm	1, 2	1, 2
M05.24	Vaskulitis bei seropositiver chronischer Polyarthritis: Hand	1, 2	1, 2
M05.25	Vaskulitis bei seropositiver chronischer Polyarthritis: Beckenregion und Oberschenkel	1, 2	1, 2
M05.26	Vaskulitis bei seropositiver chronischer Polyarthritis: Unterschenkel	1, 2	1, 2
M05.27	Vaskulitis bei seropositiver chronischer Polyarthritis: Knöchel und Fuß	1, 2	1, 2
M05.28	Vaskulitis bei seropositiver chronischer Polyarthritis: Sonstige	1, 2	1, 2
M05.30	Seropositive chronische Polyarthritis mit Beteiligung sonstiger Organe und Organsysteme: Mehrere Lokalisationen	1, 2	1, 2

ICD	Beschreibung	OP CCL	Med. CCL
M05.31	Seropositive chronische Polyarthritis mit Beteiligung sonstiger Organe und Organsysteme: Schulterregion	1, 2	1, 2
M05.32	Seropositive chronische Polyarthritis mit Beteiligung sonstiger Organe und Organsysteme: Oberarm	1, 2	1, 2
M05.33	Seropositive chronische Polyarthritis mit Beteiligung sonstiger Organe und Organsysteme: Unterarm	1, 2	1, 2
M05.34	Seropositive chronische Polyarthritis mit Beteiligung sonstiger Organe und Organsysteme: Hand	1, 2	1, 2
M05.35	Seropositive chronische Polyarthritis mit Beteiligung sonstiger Organe und Organsysteme: Beckenregion und Oberschenkel	1, 2	1, 2
M05.36	Seropositive chronische Polyarthritis mit Beteiligung sonstiger Organe und Organsysteme: Unterschenkel	1, 2	1, 2
M05.37	Seropositive chronische Polyarthritis mit Beteiligung sonstiger Organe und Organsysteme: Knöchel und Fuß	1, 2	1, 2
M05.38	Seropositive chronische Polyarthritis mit Beteiligung sonstiger Organe und Organsysteme: Sonstige	1, 2	1, 2
M06.10	Adulte Form der Still-Krankheit: Mehrere Lokalisationen	1, 2	1, 2
M06.11	Adulte Form der Still-Krankheit: Schulterregion	1, 2	1, 2
M06.12	Adulte Form der Still-Krankheit: Oberarm	1, 2	1, 2
M06.13	Adulte Form der Still-Krankheit: Unterarm	1, 2	1, 2
M06.14	Adulte Form der Still-Krankheit: Hand	1, 2	1, 2
M06.15	Adulte Form der Still-Krankheit: Beckenregion und Oberschenkel	1, 2	1, 2
M06.16	Adulte Form der Still-Krankheit: Unterschenkel	1, 2	1, 2
M06.17	Adulte Form der Still-Krankheit: Knöchel und Fuß	1, 2	1, 2
M06.18	Adulte Form der Still-Krankheit: Sonstige	1, 2	1, 2
M07.04	Distale interphalangeale Arthritis psoriatica {L40.5}: Hand	1, 2	1, 2
M07.07	Distale interphalangeale Arthritis psoriatica {L40.5}: Knöchel und Fuß	1, 2	1, 2
M07.10	Arthritis mutilans {L40.5}: Mehrere Lokalisationen	1, 2	1, 2
M07.11	Arthritis mutilans {L40.5}: Schulterregion	1, 2	1, 2
M07.12	Arthritis mutilans {L40.5}: Oberarm	1, 2	1, 2
M07.13	Arthritis mutilans {L40.5}: Unterarm	1, 2	1, 2
M07.14	Arthritis mutilans {L40.5}: Hand	1, 2	1, 2
M07.15	Arthritis mutilans {L40.5}: Beckenregion und Oberschenkel	1, 2	1, 2
M07.16	Arthritis mutilans {L40.5}: Unterschenkel	1, 2	1, 2
M07.17	Arthritis mutilans {L40.5}: Knöchel und Fuß	1, 2	1, 2
M07.18	Arthritis mutilans {L40.5}: Sonstige	1, 2	1, 2
M07.2	Spondylitis psoriatica {L40.5}	1, 2	1, 2
M07.30	Sonstige psoriatische Arthritiden {L40.5}: Mehrere Lokalisationen	1, 2	1, 2
M07.31	Sonstige psoriatische Arthritiden {L40.5}: Schulterregion	1, 2	1, 2
M07.32	Sonstige psoriatische Arthritiden {L40.5}: Oberarm	1, 2	1, 2
M07.33	Sonstige psoriatische Arthritiden {L40.5}: Unterarm	1, 2	1, 2
M07.34	Sonstige psoriatische Arthritiden {L40.5}: Hand	1, 2	1, 2
M07.35	Sonstige psoriatische Arthritiden {L40.5}: Beckenregion und Oberschenkel	1, 2	1, 2
M07.36	Sonstige psoriatische Arthritiden {L40.5}: Unterschenkel	1, 2	1, 2
M07.37	Sonstige psoriatische Arthritiden {L40.5}: Knöchel und Fuß	1, 2	1, 2
M07.38	Sonstige psoriatische Arthritiden {L40.5}: Sonstige	1, 2	1, 2
M07.40	Arthritis bei Crohn-Krankheit [Enteritis regionalis] {K50.-}: Mehrere Lokalisationen	1, 2	1, 2
M07.41	Arthritis bei Crohn-Krankheit [Enteritis regionalis] {K50.-}: Schulterregion	1, 2	1, 2
M07.42	Arthritis bei Crohn-Krankheit [Enteritis regionalis] {K50.-}: Oberarm	1, 2	1, 2
M07.43	Arthritis bei Crohn-Krankheit [Enteritis regionalis] {K50.-}: Unterarm	1, 2	1, 2
M07.44	Arthritis bei Crohn-Krankheit [Enteritis regionalis] {K50.-}: Hand	1, 2	1, 2
M07.45	Arthritis bei Crohn-Krankheit [Enteritis regionalis] {K50.-}: Beckenregion und Oberschenkel	1, 2	1, 2
M07.46	Arthritis bei Crohn-Krankheit [Enteritis regionalis] {K50.-}: Unterschenkel	1, 2	1, 2
M07.47	Arthritis bei Crohn-Krankheit [Enteritis regionalis] {K50.-}: Knöchel und Fuß	1, 2	1, 2
M07.48	Arthritis bei Crohn-Krankheit [Enteritis regionalis] {K50.-}: Sonstige	1, 2	1, 2
M07.50	Arthritis bei Colitis ulcerosa {K51.-}: Mehrere Lokalisationen	1, 2	1, 2
M07.51	Arthritis bei Colitis ulcerosa {K51.-}: Schulterregion	1, 2	1, 2
M07.52	Arthritis bei Colitis ulcerosa {K51.-}: Oberarm	1, 2	1, 2
M07.53	Arthritis bei Colitis ulcerosa {K51.-}: Unterarm	1, 2	1, 2
M07.54	Arthritis bei Colitis ulcerosa {K51.-}: Hand	1, 2	1, 2
M07.55	Arthritis bei Colitis ulcerosa {K51.-}: Beckenregion und Oberschenkel	1, 2	1, 2
M07.56	Arthritis bei Colitis ulcerosa {K51.-}: Unterschenkel	1, 2	1, 2
M07.57	Arthritis bei Colitis ulcerosa {K51.-}: Knöchel und Fuß	1, 2	1, 2
M07.58	Arthritis bei Colitis ulcerosa {K51.-}: Sonstige	1, 2	1, 2

ICD	Beschreibung	OP CCL	Med. CCL
M08.00	Juvenile chronische Polyarthritis, adulter Typ: Mehrere Lokalisationen	1, 2	1, 2
M08.01	Juvenile chronische Polyarthritis, adulter Typ: Schulterregion	1, 2	1, 2
M08.02	Juvenile chronische Polyarthritis, adulter Typ: Oberarm	1, 2	1, 2
M08.03	Juvenile chronische Polyarthritis, adulter Typ: Unterarm	1, 2	1, 2
M08.04	Juvenile chronische Polyarthritis, adulter Typ: Hand	1, 2	1, 2
M08.05	Juvenile chronische Polyarthritis, adulter Typ: Beckenregion und Oberschenkel	1, 2	1, 2
M08.06	Juvenile chronische Polyarthritis, adulter Typ: Unterschenkel	1, 2	1, 2
M08.07	Juvenile chronische Polyarthritis, adulter Typ: Knöchel und Fuß	1, 2	1, 2
M08.08	Juvenile chronische Polyarthritis, adulter Typ: Sonstige	1, 2	1, 2
M08.10	Juvenile Spondylitis ankylosans: Mehrere Lokalisationen	1, 2	1, 2
M08.11	Juvenile Spondylitis ankylosans: Schulterregion	1, 2	1, 2
M08.12	Juvenile Spondylitis ankylosans: Oberarm	1, 2	1, 2
M08.13	Juvenile Spondylitis ankylosans: Unterarm	1, 2	1, 2
M08.14	Juvenile Spondylitis ankylosans: Hand	1, 2	1, 2
M08.15	Juvenile Spondylitis ankylosans: Beckenregion und Oberschenkel	1, 2	1, 2
M08.16	Juvenile Spondylitis ankylosans: Unterschenkel	1, 2	1, 2
M08.17	Juvenile Spondylitis ankylosans: Knöchel und Fuß	1, 2	1, 2
M08.18	Juvenile Spondylitis ankylosans: Sonstige	1, 2	1, 2
M08.20	Juvenile chronische Arthritis, systemisch beginnende Form: Mehrere Lokalisationen	1, 2	1, 2
M08.21	Juvenile chronische Arthritis, systemisch beginnende Form: Schulterregion	1, 2	1, 2
M08.22	Juvenile chronische Arthritis, systemisch beginnende Form: Oberarm	1, 2	1, 2
M08.23	Juvenile chronische Arthritis, systemisch beginnende Form: Unterarm	1, 2	1, 2
M08.24	Juvenile chronische Arthritis, systemisch beginnende Form: Hand	1, 2	1, 2
M08.25	Juvenile chronische Arthritis, systemisch beginnende Form: Beckenregion und Oberschenkel	1, 2	1, 2
M08.26	Juvenile chronische Arthritis, systemisch beginnende Form: Unterschenkel	1, 2	1, 2
M08.27	Juvenile chronische Arthritis, systemisch beginnende Form: Knöchel und Fuß	1, 2	1, 2
M08.28	Juvenile chronische Arthritis, systemisch beginnende Form: Sonstige	1, 2	1, 2
M08.3	Juvenile chronische Arthritis (seronegativ), polyartikuläre Form	1, 2	1, 2
M08.40	Juvenile chronische Arthritis, oligoartikuläre Form: Mehrere Lokalisationen	1, 2	1, 2
M08.41	Juvenile chronische Arthritis, oligoartikuläre Form: Schulterregion	1, 2	1, 2
M08.42	Juvenile chronische Arthritis, oligoartikuläre Form: Oberarm	1, 2	1, 2
M08.43	Juvenile chronische Arthritis, oligoartikuläre Form: Unterarm	1, 2	1, 2
M08.44	Juvenile chronische Arthritis, oligoartikuläre Form: Hand	1, 2	1, 2
M08.45	Juvenile chronische Arthritis, oligoartikuläre Form: Beckenregion und Oberschenkel	1, 2	1, 2
M08.46	Juvenile chronische Arthritis, oligoartikuläre Form: Unterschenkel	1, 2	1, 2
M08.47	Juvenile chronische Arthritis, oligoartikuläre Form: Knöchel und Fuß	1, 2	1, 2
M08.48	Juvenile chronische Arthritis, oligoartikuläre Form: Sonstige	1, 2	1, 2
M08.70	Vaskulitis bei juveniler Arthritis: Mehrere Lokalisationen	1, 2	1, 2
M08.71	Vaskulitis bei juveniler Arthritis: Schulterregion	1, 2	1, 2
M08.72	Vaskulitis bei juveniler Arthritis: Oberarm	1, 2	1, 2
M08.73	Vaskulitis bei juveniler Arthritis: Unterarm	1, 2	1, 2
M08.74	Vaskulitis bei juveniler Arthritis: Hand	1, 2	1, 2
M08.75	Vaskulitis bei juveniler Arthritis: Beckenregion und Oberschenkel	1, 2	1, 2
M08.76	Vaskulitis bei juveniler Arthritis: Unterschenkel	1, 2	1, 2
M08.77	Vaskulitis bei juveniler Arthritis: Knöchel und Fuß	1, 2	1, 2
M08.78	Vaskulitis bei juveniler Arthritis: Sonstige	1, 2	1, 2
M08.80	Sonstige juvenile Arthritis: Mehrere Lokalisationen	1, 2	1, 2
M08.81	Sonstige juvenile Arthritis: Schulterregion	1, 2	1, 2
M08.82	Sonstige juvenile Arthritis: Oberarm	1, 2	1, 2
M08.83	Sonstige juvenile Arthritis: Unterarm	1, 2	1, 2
M08.84	Sonstige juvenile Arthritis: Hand	1, 2	1, 2
M08.85	Sonstige juvenile Arthritis: Beckenregion und Oberschenkel	1, 2	1, 2
M08.86	Sonstige juvenile Arthritis: Unterschenkel	1, 2	1, 2
M08.87	Sonstige juvenile Arthritis: Knöchel und Fuß	1, 2	1, 2
M08.88	Sonstige juvenile Arthritis: Sonstige	1, 2	1, 2
M09.00	Juvenile Arthritis bei Psoriasis {L40.5}: Mehrere Lokalisationen	1, 2	1, 2
M09.01	Juvenile Arthritis bei Psoriasis {L40.5}: Schulterregion	1, 2	1, 2
M09.02	Juvenile Arthritis bei Psoriasis {L40.5}: Oberarm	1, 2	1, 2

ICD	Beschreibung	OP CCL	Med. CCL
M09.03	Juvenile Arthritis bei Psoriasis {L40.5}: Unterarm	1, 2	1, 2
M09.04	Juvenile Arthritis bei Psoriasis {L40.5}: Hand	1, 2	1, 2
M09.05	Juvenile Arthritis bei Psoriasis {L40.5}: Beckenregion und Oberschenkel	1, 2	1, 2
M09.06	Juvenile Arthritis bei Psoriasis {L40.5}: Unterschenkel	1, 2	1, 2
M09.07	Juvenile Arthritis bei Psoriasis {L40.5}: Knöchel und Fuß	1, 2	1, 2
M09.08	Juvenile Arthritis bei Psoriasis {L40.5}: Sonstige	1, 2	1, 2
M09.10	Juvenile Arthritis bei Crohn-Krankheit [Enteritis regionalis] {K50.-}: Mehrere Lokalisationen	1, 2	1, 2
M09.11	Juvenile Arthritis bei Crohn-Krankheit [Enteritis regionalis] {K50.-}: Schulterregion	1, 2	1, 2
M09.12	Juvenile Arthritis bei Crohn-Krankheit [Enteritis regionalis] {K50.-}: Oberarm	1, 2	1, 2
M09.13	Juvenile Arthritis bei Crohn-Krankheit [Enteritis regionalis] {K50.-}: Unterarm	1, 2	1, 2
M09.14	Juvenile Arthritis bei Crohn-Krankheit [Enteritis regionalis] {K50.-}: Hand	1, 2	1, 2
M09.15	Juvenile Arthritis bei Crohn-Krankheit [Enteritis regionalis] {K50.-}: Beckenregion und Oberschenkel	1, 2	1, 2
M09.16	Juvenile Arthritis bei Crohn-Krankheit [Enteritis regionalis] {K50.-}: Unterschenkel	1, 2	1, 2
M09.17	Juvenile Arthritis bei Crohn-Krankheit [Enteritis regionalis] {K50.-}: Knöchel und Fuß	1, 2	1, 2
M09.18	Juvenile Arthritis bei Crohn-Krankheit [Enteritis regionalis] {K50.-}: Sonstige	1, 2	1, 2
M09.20	Juvenile Arthritis bei Colitis ulcerosa {K51.-}: Mehrere Lokalisationen	1, 2	1, 2
M09.21	Juvenile Arthritis bei Colitis ulcerosa {K51.-}: Schulterregion	1, 2	1, 2
M09.22	Juvenile Arthritis bei Colitis ulcerosa {K51.-}: Oberarm	1, 2	1, 2
M09.23	Juvenile Arthritis bei Colitis ulcerosa {K51.-}: Unterarm	1, 2	1, 2
M09.24	Juvenile Arthritis bei Colitis ulcerosa {K51.-}: Hand	1, 2	1, 2
M09.25	Juvenile Arthritis bei Colitis ulcerosa {K51.-}: Beckenregion und Oberschenkel	1, 2	1, 2
M09.26	Juvenile Arthritis bei Colitis ulcerosa {K51.-}: Unterschenkel	1, 2	1, 2
M09.27	Juvenile Arthritis bei Colitis ulcerosa {K51.-}: Knöchel und Fuß	1, 2	1, 2
M09.28	Juvenile Arthritis bei Colitis ulcerosa {K51.-}: Sonstige	1, 2	1, 2
M09.80	Juvenile Arthritis bei sonstigen anderenorts klassifizierten Krankheiten: Mehrere Lokalisationen	1, 2	1, 2
M09.81	Juvenile Arthritis bei sonstigen anderenorts klassifizierten Krankheiten: Schulterregion	1, 2	1, 2
M09.82	Juvenile Arthritis bei sonstigen anderenorts klassifizierten Krankheiten: Oberarm	1, 2	1, 2
M09.83	Juvenile Arthritis bei sonstigen anderenorts klassifizierten Krankheiten: Unterarm	1, 2	1, 2
M09.84	Juvenile Arthritis bei sonstigen anderenorts klassifizierten Krankheiten: Hand	1, 2	1, 2
M09.85	Juvenile Arthritis bei sonstigen anderenorts klassifizierten Krankheiten: Beckenregion und Oberschenkel	1, 2	1, 2
M09.86	Juvenile Arthritis bei sonstigen anderenorts klassifizierten Krankheiten: Unterschenkel	1, 2	1, 2
M09.87	Juvenile Arthritis bei sonstigen anderenorts klassifizierten Krankheiten: Knöchel und Fuß	1, 2	1, 2
M09.88	Juvenile Arthritis bei sonstigen anderenorts klassifizierten Krankheiten: Sonstige	1, 2	1, 2
M30.0	Panarteriitis nodosa	1, 2	1, 2
M30.1	Panarteriitis mit Lungenbeteiligung	1, 2	1, 2
M30.2	Juvenile Panarteriitis	1, 2	1, 2
M30.8	Sonstige mit Panarteriitis nodosa verwandte Zustände	1, 2	1, 2
M31.0	Hypersensitivitätsangiitis	1, 2	1, 2
M31.1	Thrombotische Mikroangiopathie	1, 2	1, 2
M31.3	Wegener-Granulomatose	1, 2	1, 2
M31.4	Aortenbogen-Syndrom [Takayasu-Syndrom]	1, 2	1, 2
M31.5	Riesenzellarteriitis bei Polymyalgia rheumatica	1, 2	1, 2
M31.6	Sonstige Riesenzellarteriitis	1, 2	1, 2
M31.7	Mikroskopische Polyangiitis	1, 2	1, 2
M31.8	Sonstige näher bezeichnete nekrotisierende Vaskulopathien	1, 2	1, 2
M32.0	Arzneimittelinduzierter systemischer Lupus erythematodes	1, 2	1, 2
M32.1	Systemischer Lupus erythematodes mit Beteiligung von Organen oder Organsystemen	1, 2	1, 2
M32.8	Sonstige Formen des systemischen Lupus erythematodes	1, 2	1, 2
M33.0	Juvenile Dermatomyositis	1, 2	1, 2
M33.1	Sonstige Dermatomyositis	1, 2	1, 2
M33.2	Polymyositis	1, 2	1, 2
M34.0	Progressive systemische Sklerose	1, 2	1, 2
M34.1	CR(E)ST-Syndrom	1, 2	1, 2
M34.2	Systemische Sklerose, durch Arzneimittel oder chemische Substanzen induziert	1, 2	1, 2
M34.8	Sonstige Formen der systemischen Sklerose	1, 2	1, 2
M35.1	Sonstige Overlap-Syndrome	1, 2	1, 2
M35.4	Eosinophile Fasziitis	2	2
M35.5	Multifokale Fibrosklerose	1, 2	1, 2
M35.8	Sonstige näher bezeichnete Krankheiten mit Systembeteiligung des Bindegewebes	1, 2	1, 2
M36.0	Dermatomyositis-Polymyositis bei Neubildungen {C00-D48}	1, 2	1, 2

ICD	Beschreibung	OP CCL	Med. CCL
M48.40	Ermüdungsbruch eines Wirbels: Mehrere Lokalisationen der Wirbelsäule	2, 3, 4	1, 2, 3
M48.41	Ermüdungsbruch eines Wirbels: Okzipito-Atlanto-Axialbereich	2, 3, 4	1, 2, 3
M48.42	Ermüdungsbruch eines Wirbels: Zervikalbereich	2, 3, 4	1, 2, 3
M48.43	Ermüdungsbruch eines Wirbels: Zervikothorakalbereich	2, 3, 4	1, 2, 3
M48.44	Ermüdungsbruch eines Wirbels: Thorakalbereich	2, 3, 4	1, 2, 3
M48.45	Ermüdungsbruch eines Wirbels: Thorakolumbalbereich	2, 3, 4	1, 2, 3
M48.46	Ermüdungsbruch eines Wirbels: Lumbalbereich	2, 3, 4	1, 2, 3
M48.47	Ermüdungsbruch eines Wirbels: Lumbosakralbereich	2, 3, 4	1, 2, 3
M48.48	Ermüdungsbruch eines Wirbels: Sakral- und Sakrokokzygealbereich	2, 3, 4	1, 2, 3
M48.50	Wirbelkörperkompression, anderenorts nicht klassifiziert: Mehrere Lokalisationen der Wirbelsäule	2, 3, 4	1, 2, 3
M48.51	Wirbelkörperkompression, anderenorts nicht klassifiziert: Okzipito-Atlanto-Axialbereich	2, 3, 4	1, 2, 3
M48.52	Wirbelkörperkompression, anderenorts nicht klassifiziert: Zervikalbereich	2, 3, 4	1, 2, 3
M48.53	Wirbelkörperkompression, anderenorts nicht klassifiziert: Zervikothorakalbereich	2, 3, 4	1, 2, 3
M48.54	Wirbelkörperkompression, anderenorts nicht klassifiziert: Thorakalbereich	2, 3, 4	1, 2, 3
M48.55	Wirbelkörperkompression, anderenorts nicht klassifiziert: Thorakolumbalbereich	2, 3, 4	1, 2, 3
M48.56	Wirbelkörperkompression, anderenorts nicht klassifiziert: Lumbalbereich	2, 3, 4	1, 2, 3
M48.57	Wirbelkörperkompression, anderenorts nicht klassifiziert: Lumbosakralbereich	2, 3, 4	1, 2, 3
M48.58	Wirbelkörperkompression, anderenorts nicht klassifiziert: Sakral- und Sakrokokzygealbereich	2, 3, 4	1, 2, 3
M49.00	Tuberkulose der Wirbelsäule {A18.0}: Mehrere Lokalisationen der Wirbelsäule	2	2
M49.01	Tuberkulose der Wirbelsäule {A18.0}: Okzipito-Atlanto-Axialbereich	2	2
M49.02	Tuberkulose der Wirbelsäule {A18.0}: Zervikalbereich	2	2
M49.03	Tuberkulose der Wirbelsäule {A18.0}: Zervikothorakalbereich	2	2
M49.04	Tuberkulose der Wirbelsäule {A18.0}: Thorakalbereich	2	2
M49.05	Tuberkulose der Wirbelsäule {A18.0}: Thorakolumbalbereich	2	2
M49.06	Tuberkulose der Wirbelsäule {A18.0}: Lumbalbereich	2	2
M49.07	Tuberkulose der Wirbelsäule {A18.0}: Lumbosakralbereich	2	2
M49.08	Tuberkulose der Wirbelsäule {A18.0}: Sakral- und Sakrokokzygealbereich	2	2
M49.50	Wirbelkörperkompression bei anderenorts klassifizierten Krankheiten: Mehrere Lokalisationen der Wirbelsäule	2, 3, 4	1, 2, 3
M49.51	Wirbelkörperkompression bei anderenorts klassifizierten Krankheiten: Okzipito-Atlanto-Axialbereich	2, 3, 4	1, 2, 3
M49.52	Wirbelkörperkompression bei anderenorts klassifizierten Krankheiten: Zervikalbereich	2, 3, 4	1, 2, 3
M49.53	Wirbelkörperkompression bei anderenorts klassifizierten Krankheiten: Zervikothorakalbereich	2, 3, 4	1, 2, 3
M49.54	Wirbelkörperkompression bei anderenorts klassifizierten Krankheiten: Thorakalbereich	2, 3, 4	1, 2, 3
M49.55	Wirbelkörperkompression bei anderenorts klassifizierten Krankheiten: Thorakolumbalbereich	2, 3, 4	1, 2, 3
M49.56	Wirbelkörperkompression bei anderenorts klassifizierten Krankheiten: Lumbalbereich	2, 3, 4	1, 2, 3
M49.57	Wirbelkörperkompression bei anderenorts klassifizierten Krankheiten: Lumbosakralbereich	2, 3, 4	1, 2, 3
M49.58	Wirbelkörperkompression bei anderenorts klassifizierten Krankheiten: Sakral- und Sakrokokzygealbereich	2, 3, 4	1, 2, 3
M60.00	Infektiöse Myositis: Mehrere Lokalisationen	2	2
M60.01	Infektiöse Myositis: Schulterregion	2	2
M60.02	Infektiöse Myositis: Oberarm	2	2
M60.03	Infektiöse Myositis: Unterarm	2	2
M60.04	Infektiöse Myositis: Hand	2	2
M60.05	Infektiöse Myositis: Beckenregion und Oberschenkel	2	2
M60.06	Infektiöse Myositis: Unterschenkel	2	2
M60.07	Infektiöse Myositis: Knöchel und Fuß	2	2
M60.08	Infektiöse Myositis: Sonstige	2	2
M62.00	Muskeldiastase: Mehrere Lokalisationen	2	2
M62.01	Muskeldiastase: Schulterregion	2	2
M62.02	Muskeldiastase: Oberarm	2	2
M62.03	Muskeldiastase: Unterarm	2	2
M62.04	Muskeldiastase: Hand	2	2
M62.05	Muskeldiastase: Beckenregion und Oberschenkel	2	2
M62.06	Muskeldiastase: Unterschenkel	2	2
M62.07	Muskeldiastase: Knöchel und Fuß	2	2
M62.08	Muskeldiastase: Sonstige	2	2
M62.10	Sonstiger Muskelriss (nichttraumatisch): Mehrere Lokalisationen	2	2
M62.11	Sonstiger Muskelriss (nichttraumatisch): Schulterregion	2	2
M62.12	Sonstiger Muskelriss (nichttraumatisch): Oberarm	2	2
M62.13	Sonstiger Muskelriss (nichttraumatisch): Unterarm	2	2

ICD	Beschreibung	OP CCL	Med. CCL
M62.14	Sonstiger Muskelriss (nichttraumatisch): Hand	2	2
M62.15	Sonstiger Muskelriss (nichttraumatisch): Beckenregion und Oberschenkel	2	2
M62.16	Sonstiger Muskelriss (nichttraumatisch): Unterschenkel	2	2
M62.17	Sonstiger Muskelriss (nichttraumatisch): Knöchel und Fuß	2	2
M62.18	Sonstiger Muskelriss (nichttraumatisch): Sonstige	2	2
M62.20	Ischämischer Muskelinfarkt (nichttraumatisch): Mehrere Lokalisationen	2	2
M62.21	Ischämischer Muskelinfarkt (nichttraumatisch): Schulterregion	2	2
M62.22	Ischämischer Muskelinfarkt (nichttraumatisch): Oberarm	2	2
M62.23	Ischämischer Muskelinfarkt (nichttraumatisch): Unterarm	2	2
M62.24	Ischämischer Muskelinfarkt (nichttraumatisch): Hand	2	2
M62.25	Ischämischer Muskelinfarkt (nichttraumatisch): Beckenregion und Oberschenkel	2	2
M62.26	Ischämischer Muskelinfarkt (nichttraumatisch): Unterschenkel	2	2
M62.27	Ischämischer Muskelinfarkt (nichttraumatisch): Knöchel und Fuß	2	2
M62.28	Ischämischer Muskelinfarkt (nichttraumatisch): Sonstige	2	2
M62.30	Immobilitätssyndrom (paraplegisch): Mehrere Lokalisationen	2	2
M62.31	Immobilitätssyndrom (paraplegisch): Schulterregion	2	2
M62.32	Immobilitätssyndrom (paraplegisch): Oberarm	2	2
M62.33	Immobilitätssyndrom (paraplegisch): Unterarm	2	2
M62.34	Immobilitätssyndrom (paraplegisch): Hand	2	2
M62.35	Immobilitätssyndrom (paraplegisch): Beckenregion und Oberschenkel	2	2
M62.36	Immobilitätssyndrom (paraplegisch): Unterschenkel	2	2
M62.37	Immobilitätssyndrom (paraplegisch): Knöchel und Fuß	2	2
M62.38	Immobilitätssyndrom (paraplegisch): Sonstige	2	2
M62.40	Muskelkontraktur: Mehrere Lokalisationen	2	2
M62.41	Muskelkontraktur: Schulterregion	2	2
M62.42	Muskelkontraktur: Oberarm	2	2
M62.43	Muskelkontraktur: Unterarm	2	2
M62.44	Muskelkontraktur: Hand	2	2
M62.45	Muskelkontraktur: Beckenregion und Oberschenkel	2	2
M62.46	Muskelkontraktur: Unterschenkel	2	2
M62.47	Muskelkontraktur: Knöchel und Fuß	2	2
M62.48	Muskelkontraktur: Sonstige	2	2

ICD	Beschreibung	OP CCL	Med. CCL
M63.00	Myositis bei anderenorts klassifizierten bakteriellen Krankheiten: Mehrere Lokalisationen	2	2
M63.01	Myositis bei anderenorts klassifizierten bakteriellen Krankheiten: Schulterregion	2	2
M63.02	Myositis bei anderenorts klassifizierten bakteriellen Krankheiten: Oberarm	2	2
M63.03	Myositis bei anderenorts klassifizierten bakteriellen Krankheiten: Unterarm	2	2
M63.04	Myositis bei anderenorts klassifizierten bakteriellen Krankheiten: Hand	2	2
M63.05	Myositis bei anderenorts klassifizierten bakteriellen Krankheiten: Beckenregion und Oberschenkel	2	2
M63.06	Myositis bei anderenorts klassifizierten bakteriellen Krankheiten: Unterschenkel	2	2
M63.07	Myositis bei anderenorts klassifizierten bakteriellen Krankheiten: Knöchel und Fuß	2	2
M63.08	Myositis bei anderenorts klassifizierten bakteriellen Krankheiten: Sonstige	2	2
M63.10	Myositis bei anderenorts klassifizierten Protozoen- und Parasiteninfektionen: Mehrere Lokalisationen	2	2
M63.11	Myositis bei anderenorts klassifizierten Protozoen- und Parasiteninfektionen: Schulterregion	2	2
M63.12	Myositis bei anderenorts klassifizierten Protozoen- und Parasiteninfektionen: Oberarm	2	2
M63.13	Myositis bei anderenorts klassifizierten Protozoen- und Parasiteninfektionen: Unterarm	2	2
M63.14	Myositis bei anderenorts klassifizierten Protozoen- und Parasiteninfektionen: Hand	2	2
M63.15	Myositis bei anderenorts klassifizierten Protozoen- und Parasiteninfektionen: Beckenregion und Oberschenkel	2	2
M63.16	Myositis bei anderenorts klassifizierten Protozoen- und Parasiteninfektionen: Unterschenkel	2	2
M63.17	Myositis bei anderenorts klassifizierten Protozoen- und Parasiteninfektionen: Knöchel und Fuß	2	2
M63.18	Myositis bei anderenorts klassifizierten Protozoen- und Parasiteninfektionen: Sonstige	2	2
M63.20	Myositis bei sonstigen anderenorts klassifizierten Infektionskrankheiten: Mehrere Lokalisationen	2	2
M63.21	Myositis bei sonstigen anderenorts klassifizierten Infektionskrankheiten: Schulterregion	2	2

ICD	Beschreibung	OP CCL	Med. CCL
M63.22	Myositis bei sonstigen anderenorts klassifizierten Infektionskrankheiten: Oberarm	2	2
M63.23	Myositis bei sonstigen anderenorts klassifizierten Infektionskrankheiten: Unterarm	2	2
M63.24	Myositis bei sonstigen anderenorts klassifizierten Infektionskrankheiten: Hand	2	2
M63.25	Myositis bei sonstigen anderenorts klassifizierten Infektionskrankheiten: Beckenregion und Oberschenkel	2	2
M63.26	Myositis bei sonstigen anderenorts klassifizierten Infektionskrankheiten: Unterschenkel	2	2
M63.27	Myositis bei sonstigen anderenorts klassifizierten Infektionskrankheiten: Knöchel und Fuß	2	2
M63.28	Myositis bei sonstigen anderenorts klassifizierten Infektionskrankheiten: Sonstige	2	2
M63.30	Myositis bei Sarkoidose {D86.8}: Mehrere Lokalisationen	2	2
M63.31	Myositis bei Sarkoidose {D86.8}: Schulterregion	2	2
M63.32	Myositis bei Sarkoidose {D86.8}: Oberarm	2	2
M63.33	Myositis bei Sarkoidose {D86.8}: Unterarm	2	2
M63.34	Myositis bei Sarkoidose {D86.8}: Hand	2	2
M63.35	Myositis bei Sarkoidose {D86.8}: Beckenregion und Oberschenkel	2	2
M63.36	Myositis bei Sarkoidose {D86.8}: Unterschenkel	2	2
M63.37	Myositis bei Sarkoidose {D86.8}: Knöchel und Fuß	2	2
M63.38	Myositis bei Sarkoidose {D86.8}: Sonstige	2	2
M63.80	Sonstige Muskelkrankheiten bei anderenorts klassifizierten Krankheiten: Mehrere Lokalisationen	2	2
M63.81	Sonstige Muskelkrankheiten bei anderenorts klassifizierten Krankheiten: Schulterregion	2	2
M63.82	Sonstige Muskelkrankheiten bei anderenorts klassifizierten Krankheiten: Oberarm	2	2
M63.83	Sonstige Muskelkrankheiten bei anderenorts klassifizierten Krankheiten: Unterarm	2	2
M63.84	Sonstige Muskelkrankheiten bei anderenorts klassifizierten Krankheiten: Hand	2	2
M63.85	Sonstige Muskelkrankheiten bei anderenorts klassifizierten Krankheiten: Beckenregion und Oberschenkel	2	2
M63.86	Sonstige Muskelkrankheiten bei anderenorts klassifizierten Krankheiten: Unterschenkel	2	2
M63.87	Sonstige Muskelkrankheiten bei anderenorts klassifizierten Krankheiten: Knöchel und Fuß	2	2
M63.88	Sonstige Muskelkrankheiten bei anderenorts klassifizierten Krankheiten: Sonstige	2	2
M72.60	Nekrotisierende Fasziitis: Mehrere Lokalisationen	2, 3	2
M72.61	Nekrotisierende Fasziitis: Schulterregion	2, 3	2
M72.62	Nekrotisierende Fasziitis: Oberarm	2, 3	2
M72.63	Nekrotisierende Fasziitis: Unterarm	2, 3	2
M72.64	Nekrotisierende Fasziitis: Hand	2, 3	2
M72.65	Nekrotisierende Fasziitis: Beckenregion und Oberschenkel	2, 3	2
M72.66	Nekrotisierende Fasziitis: Unterschenkel	2, 3	2
M72.67	Nekrotisierende Fasziitis: Knöchel und Fuß	2, 3	2
M72.68	Nekrotisierende Fasziitis: Sonstige	2, 3	2
M84.00	Frakturheilung in Fehlstellung: Mehrere Lokalisationen	2, 3	2
M84.01	Frakturheilung in Fehlstellung: Schulterregion	2, 3	2
M84.02	Frakturheilung in Fehlstellung: Oberarm	2, 3	2
M84.03	Frakturheilung in Fehlstellung: Unterarm	2, 3	2
M84.04	Frakturheilung in Fehlstellung: Hand	2, 3	2
M84.05	Frakturheilung in Fehlstellung: Beckenregion und Oberschenkel	2, 3	2
M84.06	Frakturheilung in Fehlstellung: Unterschenkel	2, 3	2
M84.07	Frakturheilung in Fehlstellung: Knöchel und Fuß	2, 3	2
M84.08	Frakturheilung in Fehlstellung: Sonstige	2, 3	2
M84.10	Nichtvereinigung der Frakturenden [Pseudarthrose]: Mehrere Lokalisationen	2, 3	2
M84.11	Nichtvereinigung der Frakturenden [Pseudarthrose]: Schulterregion	2, 3	2
M84.12	Nichtvereinigung der Frakturenden [Pseudarthrose]: Oberarm	2, 3	2
M84.13	Nichtvereinigung der Frakturenden [Pseudarthrose]: Unterarm	2, 3	2
M84.14	Nichtvereinigung der Frakturenden [Pseudarthrose]: Hand	2, 3	2
M84.15	Nichtvereinigung der Frakturenden [Pseudarthrose]: Beckenregion und Oberschenkel	2, 3	2
M84.16	Nichtvereinigung der Frakturenden [Pseudarthrose]: Unterschenkel	2, 3	2
M84.17	Nichtvereinigung der Frakturenden [Pseudarthrose]: Knöchel und Fuß	2, 3	2
M84.18	Nichtvereinigung der Frakturenden [Pseudarthrose]: Sonstige	2, 3	2
M84.20	Verzögerte Frakturheilung: Mehrere Lokalisationen	2, 3	2
M84.21	Verzögerte Frakturheilung: Schulterregion	2, 3	2

ICD	Beschreibung	OP CCL	Med. CCL
M84.22	Verzögerte Frakturheilung: Oberarm	2, 3	2
M84.23	Verzögerte Frakturheilung: Unterarm	2, 3	2
M84.24	Verzögerte Frakturheilung: Hand	2, 3	2
M84.25	Verzögerte Frakturheilung: Beckenregion und Oberschenkel	2, 3	2
M84.26	Verzögerte Frakturheilung: Unterschenkel	2, 3	2
M84.27	Verzögerte Frakturheilung: Knöchel und Fuß	2, 3	2
M84.28	Verzögerte Frakturheilung: Sonstige	2, 3	2
M84.30	Stressfraktur, anderenorts nicht klassifiziert: Mehrere Lokalisationen	2, 3, 4	1, 2, 3
M84.31	Stressfraktur, anderenorts nicht klassifiziert: Schulterregion	2, 3, 4	1, 2, 3
M84.32	Stressfraktur, anderenorts nicht klassifiziert: Oberarm	2, 3, 4	1, 2, 3
M84.33	Stressfraktur, anderenorts nicht klassifiziert: Unterarm	2, 3, 4	1, 2, 3
M84.34	Stressfraktur, anderenorts nicht klassifiziert: Hand	2, 3, 4	1, 2, 3
M84.35	Stressfraktur, anderenorts nicht klassifiziert: Beckenregion und Oberschenkel	2, 3, 4	1, 2, 3
M84.36	Stressfraktur, anderenorts nicht klassifiziert: Unterschenkel	2, 3, 4	1, 2, 3
M84.37	Stressfraktur, anderenorts nicht klassifiziert: Knöchel und Fuß	2, 3, 4	1, 2, 3
M84.38	Stressfraktur, anderenorts nicht klassifiziert: Sonstige	2, 3, 4	1, 2, 3
M84.40	Pathologische Fraktur, anderenorts nicht klassifiziert: Mehrere Lokalisationen	2, 3, 4	1, 2, 3
M84.41	Pathologische Fraktur, anderenorts nicht klassifiziert: Schulterregion	2, 3, 4	1, 2, 3
M84.42	Pathologische Fraktur, anderenorts nicht klassifiziert: Oberarm	2, 3, 4	1, 2, 3
M84.43	Pathologische Fraktur, anderenorts nicht klassifiziert: Unterarm	2, 3, 4	1, 2, 3
M84.44	Pathologische Fraktur, anderenorts nicht klassifiziert: Hand	2, 3, 4	1, 2, 3
M84.45	Pathologische Fraktur, anderenorts nicht klassifiziert: Beckenregion und Oberschenkel	2, 3, 4	1, 2, 3
M84.46	Pathologische Fraktur, anderenorts nicht klassifiziert: Unterschenkel	2, 3, 4	1, 2, 3
M84.47	Pathologische Fraktur, anderenorts nicht klassifiziert: Knöchel und Fuß	2, 3, 4	1, 2, 3
M84.48	Pathologische Fraktur, anderenorts nicht klassifiziert: Sonstige	2, 3, 4	1, 2, 3
M86.00	Akute hämatogene Osteomyelitis: Mehrere Lokalisationen	2, 4	2
M86.01	Akute hämatogene Osteomyelitis: Schulterregion	2, 4	2
M86.02	Akute hämatogene Osteomyelitis: Oberarm	2, 4	2
M86.03	Akute hämatogene Osteomyelitis: Unterarm	2, 4	2
M86.04	Akute hämatogene Osteomyelitis: Hand	2, 4	2
M86.05	Akute hämatogene Osteomyelitis: Beckenregion und Oberschenkel	2, 4	2
M86.06	Akute hämatogene Osteomyelitis: Unterschenkel	2, 4	2
M86.07	Akute hämatogene Osteomyelitis: Knöchel und Fuß	2, 4	2
M86.08	Akute hämatogene Osteomyelitis: Sonstige	2, 4	2
M86.10	Sonstige akute Osteomyelitis: Mehrere Lokalisationen	1, 2	1, 2
M86.11	Sonstige akute Osteomyelitis: Schulterregion	1, 2	1, 2
M86.12	Sonstige akute Osteomyelitis: Oberarm	1, 2	1, 2
M86.13	Sonstige akute Osteomyelitis: Unterarm	1, 2	1, 2
M86.14	Sonstige akute Osteomyelitis: Hand	1, 2	1, 2
M86.15	Sonstige akute Osteomyelitis: Beckenregion und Oberschenkel	1, 2	1, 2
M86.16	Sonstige akute Osteomyelitis: Unterschenkel	1, 2	1, 2
M86.17	Sonstige akute Osteomyelitis: Knöchel und Fuß	1, 2	1, 2
M86.18	Sonstige akute Osteomyelitis: Sonstige	1, 2	1, 2
M86.20	Subakute Osteomyelitis: Mehrere Lokalisationen	2, 4	2
M86.21	Subakute Osteomyelitis: Schulterregion	2, 4	2
M86.22	Subakute Osteomyelitis: Oberarm	2, 4	2
M86.23	Subakute Osteomyelitis: Unterarm	2, 4	2
M86.24	Subakute Osteomyelitis: Hand	2, 4	2
M86.25	Subakute Osteomyelitis: Beckenregion und Oberschenkel	2, 4	2
M86.26	Subakute Osteomyelitis: Unterschenkel	2, 4	2
M86.27	Subakute Osteomyelitis: Knöchel und Fuß	2, 4	2
M86.28	Subakute Osteomyelitis: Sonstige	2, 4	2
M86.30	Chronische multifokale Osteomyelitis: Mehrere Lokalisationen	2, 4	2
M86.31	Chronische multifokale Osteomyelitis: Schulterregion	2, 4	2
M86.32	Chronische multifokale Osteomyelitis: Oberarm	2, 4	2
M86.33	Chronische multifokale Osteomyelitis: Unterarm	2, 4	2
M86.34	Chronische multifokale Osteomyelitis: Hand	2, 4	2
M86.35	Chronische multifokale Osteomyelitis: Beckenregion und Oberschenkel	2, 4	2
M86.36	Chronische multifokale Osteomyelitis: Unterschenkel	2, 4	2
M86.37	Chronische multifokale Osteomyelitis: Knöchel und Fuß	2, 4	2
M86.38	Chronische multifokale Osteomyelitis: Sonstige	2, 4	2
M86.40	Chronische Osteomyelitis mit Fistel: Mehrere Lokalisationen	2, 4	2
M86.41	Chronische Osteomyelitis mit Fistel: Schulterregion	2, 4	2

ICD	Beschreibung	OP CCL	Med. CCL
M86.42	Chronische Osteomyelitis mit Fistel: Oberarm	2, 4	2
M86.43	Chronische Osteomyelitis mit Fistel: Unterarm	2, 4	2
M86.44	Chronische Osteomyelitis mit Fistel: Hand	2, 4	2
M86.45	Chronische Osteomyelitis mit Fistel: Beckenregion und Oberschenkel	2, 4	2
M86.46	Chronische Osteomyelitis mit Fistel: Unterschenkel	2, 4	2
M86.47	Chronische Osteomyelitis mit Fistel: Knöchel und Fuß	2, 4	2
M86.48	Chronische Osteomyelitis mit Fistel: Sonstige	2, 4	2
M86.50	Sonstige chronische hämatogene Osteomyelitis: Mehrere Lokalisationen	2, 4	2
M86.51	Sonstige chronische hämatogene Osteomyelitis: Schulterregion	2, 4	2
M86.52	Sonstige chronische hämatogene Osteomyelitis: Oberarm	2, 4	2
M86.53	Sonstige chronische hämatogene Osteomyelitis: Unterarm	2, 4	2
M86.54	Sonstige chronische hämatogene Osteomyelitis: Hand	2, 4	2
M86.55	Sonstige chronische hämatogene Osteomyelitis: Beckenregion und Oberschenkel	2, 4	2
M86.56	Sonstige chronische hämatogene Osteomyelitis: Unterschenkel	2, 4	2
M86.57	Sonstige chronische hämatogene Osteomyelitis: Knöchel und Fuß	2, 4	2
M86.58	Sonstige chronische hämatogene Osteomyelitis: Sonstige	2, 4	2
M90.00	Knochentuberkulose {A18.0}: Mehrere Lokalisationen	2, 4	2
M90.01	Knochentuberkulose {A18.0}: Schulterregion	2, 4	2
M90.02	Knochentuberkulose {A18.0}: Oberarm	2, 4	2
M90.03	Knochentuberkulose {A18.0}: Unterarm	2, 4	2
M90.04	Knochentuberkulose {A18.0}: Hand	2, 4	2
M90.05	Knochentuberkulose {A18.0}: Beckenregion und Oberschenkel	2, 4	2
M90.06	Knochentuberkulose {A18.0}: Unterschenkel	2, 4	2
M90.07	Knochentuberkulose {A18.0}: Knöchel und Fuß	2, 4	2
M90.08	Knochentuberkulose {A18.0}: Sonstige	2, 4	2
M90.10	Periostitis bei sonstigen anderenorts klassifizierten Infektionskrankheiten: Mehrere Lokalisationen	2, 4	2
M90.11	Periostitis bei sonstigen anderenorts klassifizierten Infektionskrankheiten: Schulterregion	2, 4	2
M90.12	Periostitis bei sonstigen anderenorts klassifizierten Infektionskrankheiten: Oberarm	2, 4	2
M90.13	Periostitis bei sonstigen anderenorts klassifizierten Infektionskrankheiten: Unterarm	2, 4	2
M90.14	Periostitis bei sonstigen anderenorts klassifizierten Infektionskrankheiten: Hand	2, 4	2
M90.15	Periostitis bei sonstigen anderenorts klassifizierten Infektionskrankheiten: Beckenregion und Oberschenkel	2, 4	2
M90.16	Periostitis bei sonstigen anderenorts klassifizierten Infektionskrankheiten: Unterschenkel	2, 4	2
M90.17	Periostitis bei sonstigen anderenorts klassifizierten Infektionskrankheiten: Knöchel und Fuß	2, 4	2
M90.18	Periostitis bei sonstigen anderenorts klassifizierten Infektionskrankheiten: Sonstige	2, 4	2
M90.20	Osteopathie bei sonstigen anderenorts klassifizierten Infektionskrankheiten: Mehrere Lokalisationen	2, 4	2
M90.21	Osteopathie bei sonstigen anderenorts klassifizierten Infektionskrankheiten: Schulterregion	2, 4	2
M90.22	Osteopathie bei sonstigen anderenorts klassifizierten Infektionskrankheiten: Oberarm	2, 4	2
M90.23	Osteopathie bei sonstigen anderenorts klassifizierten Infektionskrankheiten: Unterarm	2, 4	2
M90.24	Osteopathie bei sonstigen anderenorts klassifizierten Infektionskrankheiten: Hand	2, 4	2
M90.25	Osteopathie bei sonstigen anderenorts klassifizierten Infektionskrankheiten: Beckenregion und Oberschenkel	2, 4	2
M90.26	Osteopathie bei sonstigen anderenorts klassifizierten Infektionskrankheiten: Unterschenkel	2, 4	2
M90.27	Osteopathie bei sonstigen anderenorts klassifizierten Infektionskrankheiten: Knöchel und Fuß	2, 4	2
M90.28	Osteopathie bei sonstigen anderenorts klassifizierten Infektionskrankheiten: Sonstige	2, 4	2
M90.30	Knochennekrose bei Caissonkrankheit {T70.3}: Mehrere Lokalisationen	2, 4	2
M90.31	Knochennekrose bei Caissonkrankheit {T70.3}: Schulterregion	2, 4	2
M90.32	Knochennekrose bei Caissonkrankheit {T70.3}: Oberarm	2, 4	2
M90.33	Knochennekrose bei Caissonkrankheit {T70.3}: Unterarm	2, 4	2
M90.34	Knochennekrose bei Caissonkrankheit {T70.3}: Hand	2, 4	2

ICD	Beschreibung	OP CCL	Med. CCL
M90.35	Knochennekrose bei Caissonkrankheit {T70.3}: Beckenregion und Oberschenkel	2, 4	2
M90.36	Knochennekrose bei Caissonkrankheit {T70.3}: Unterschenkel	2, 4	2
M90.37	Knochennekrose bei Caissonkrankheit {T70.3}: Knöchel und Fuß	2, 4	2
M90.38	Knochennekrose bei Caissonkrankheit {T70.3}: Sonstige	2, 4	2
M90.40	Knochennekrose durch Hämoglobinopathie {D50-D64}: Mehrere Lokalisationen	2, 4	2
M90.41	Knochennekrose durch Hämoglobinopathie {D50-D64}: Schulterregion	2, 4	2
M90.42	Knochennekrose durch Hämoglobinopathie {D50-D64}: Oberarm	2, 4	2
M90.43	Knochennekrose durch Hämoglobinopathie {D50-D64}: Unterarm	2, 4	2
M90.44	Knochennekrose durch Hämoglobinopathie {D50-D64}: Hand	2, 4	2
M90.45	Knochennekrose durch Hämoglobinopathie {D50-D64}: Beckenregion und Oberschenkel	2, 4	2
M90.46	Knochennekrose durch Hämoglobinopathie {D50-D64}: Unterschenkel	2, 4	2
M90.47	Knochennekrose durch Hämoglobinopathie {D50-D64}: Knöchel und Fuß	2, 4	2
M90.48	Knochennekrose durch Hämoglobinopathie {D50-D64}: Sonstige	2, 4	2
M90.60	Osteodystrophia deformans bei Neubildungen {C00-D48}: Mehrere Lokalisationen	2, 4	2
M90.61	Osteodystrophia deformans bei Neubildungen {C00-D48}: Schulterregion	2, 4	2
M90.62	Osteodystrophia deformans bei Neubildungen {C00-D48}: Oberarm	2, 4	2
M90.63	Osteodystrophia deformans bei Neubildungen {C00-D48}: Unterarm	2, 4	2
M90.64	Osteodystrophia deformans bei Neubildungen {C00-D48}: Hand	2, 4	2
M90.65	Osteodystrophia deformans bei Neubildungen {C00-D48}: Beckenregion und Oberschenkel	2, 4	2
M90.66	Osteodystrophia deformans bei Neubildungen {C00-D48}: Unterschenkel	2, 4	2
M90.67	Osteodystrophia deformans bei Neubildungen {C00-D48}: Knöchel und Fuß	2, 4	2
M90.68	Osteodystrophia deformans bei Neubildungen {C00-D48}: Sonstige	2, 4	2
M90.70	Knochenfraktur bei Neubildungen {C00-D48}: Mehrere Lokalisationen	2, 3, 4	1, 2, 3
M90.71	Knochenfraktur bei Neubildungen {C00-D48}: Schulterregion	2, 3, 4	1, 2, 3
M90.72	Knochenfraktur bei Neubildungen {C00-D48}: Oberarm	2, 3, 4	1, 2, 3
M90.73	Knochenfraktur bei Neubildungen {C00-D48}: Unterarm	2, 3, 4	1, 2, 3
M90.74	Knochenfraktur bei Neubildungen {C00-D48}: Hand	2, 3, 4	1, 2, 3
M90.75	Knochenfraktur bei Neubildungen {C00-D48}: Beckenregion und Oberschenkel	2, 3, 4	1, 2, 3
M90.76	Knochenfraktur bei Neubildungen {C00-D48}: Unterschenkel	2, 3, 4	1, 2, 3
M90.77	Knochenfraktur bei Neubildungen {C00-D48}: Knöchel und Fuß	2, 3, 4	1, 2, 3
M90.78	Knochenfraktur bei Neubildungen {C00-D48}: Sonstige	2, 3, 4	1, 2, 3
M96.0	Pseudarthrose nach Fusion oder Arthrodese	2, 3	2
M96.80	Elektiv offen belassenes Sternum nach thoraxchirurgischem Eingriff	2, 3	2, 3
M96.81	Instabiler Thorax nach thoraxchirurgischem Eingriff	2, 3	2, 3
N00.0	Akutes nephritisches Syndrom: Minimale glomeruläre Läsion	2, 3, 4	2, 3
N00.1	Akutes nephritisches Syndrom: Fokale und segmentale glomeruläre Läsionen	2, 3, 4	2, 3
N00.2	Akutes nephritisches Syndrom: Diffuse membranöse Glomerulonephritis	2, 3, 4	2, 3
N00.3	Akutes nephritisches Syndrom: Diffuse mesangioproliferative Glomerulonephritis	2, 3, 4	2, 3
N00.4	Akutes nephritisches Syndrom: Diffuse endokapillär-proliferative Glomerulonephritis	2, 3, 4	2, 3
N00.5	Akutes nephritisches Syndrom: Diffuse mesangiokapilläre Glomerulonephritis	2, 3, 4	2, 3
N00.6	Akutes nephritisches Syndrom: Dense-deposit-Krankheit	2, 3, 4	2, 3
N00.7	Akutes nephritisches Syndrom: Glomerulonephritis mit diffuser Halbmondbildung	2, 3, 4	2, 3
N00.8	Akutes nephritisches Syndrom: Sonstige morphologische Veränderungen	2, 3, 4	2, 3
N00.9	Akutes nephritisches Syndrom: Art der morphologischen Veränderung nicht näher bezeichnet	2, 3, 4	2, 3
N01.0	Rapid-progressives nephritisches Syndrom: Minimale glomeruläre Läsion	2, 3, 4	2, 3
N01.1	Rapid-progressives nephritisches Syndrom: Fokale und segmentale glomeruläre Läsionen	2, 3, 4	2, 3
N01.2	Rapid-progressives nephritisches Syndrom: Diffuse membranöse Glomerulonephritis	2, 3, 4	2, 3

ICD	Beschreibung	OP CCL	Med. CCL
N01.3	Rapid-progressives nephritisches Syndrom: Diffuse mesangioproliferative Glomerulonephritis	2, 3, 4	2, 3
N01.4	Rapid-progressives nephritisches Syndrom: Diffuse endokapillär-proliferative Glomerulonephritis	2, 3, 4	2, 3
N01.5	Rapid-progressives nephritisches Syndrom: Diffuse mesangiokapilläre Glomerulonephritis	2, 3, 4	2, 3
N01.6	Rapid-progressives nephritisches Syndrom: Dense-deposit-Krankheit	2, 3, 4	2, 3
N01.7	Rapid-progressives nephritisches Syndrom: Glomerulonephritis mit diffuser Halbmondbildung	2, 3, 4	2, 3
N01.8	Rapid-progressives nephritisches Syndrom: Sonstige morphologische Veränderungen	2, 3, 4	2, 3
N01.9	Rapid-progressives nephritisches Syndrom: Art der morphologischen Veränderung nicht näher bezeichnet	2, 3, 4	2, 3
N02.0	Rezidivierende und persistierende Hämaturie: Minimale glomeruläre Läsion	2, 3	2, 3
N02.1	Rezidivierende und persistierende Hämaturie: Fokale und segmentale glomeruläre Läsionen	2, 3	2, 3
N02.2	Rezidivierende und persistierende Hämaturie: Diffuse membranöse Glomerulonephritis	2, 3	2, 3
N02.3	Rezidivierende und persistierende Hämaturie: Diffuse mesangioproliferative Glomerulonephritis	2, 3	2, 3
N02.4	Rezidivierende und persistierende Hämaturie: Diffuse endokapillär-proliferative Glomerulonephritis	2, 3	2, 3
N02.5	Rezidivierende und persistierende Hämaturie: Diffuse mesangiokapilläre Glomerulonephritis	2, 3	2, 3
N02.6	Rezidivierende und persistierende Hämaturie: Dense-deposit-Krankheit	2, 3	2, 3
N02.7	Rezidivierende und persistierende Hämaturie: Glomerulonephritis mit diffuser Halbmondbildung	2, 3	2, 3
N02.8	Rezidivierende und persistierende Hämaturie: Sonstige morphologische Veränderungen	2, 3	2, 3
N02.9	Rezidivierende und persistierende Hämaturie: Art der morphologischen Veränderung nicht näher bezeichnet	2, 3	2, 3
N03.6	Chronisches nephritisches Syndrom: Dense-deposit-Krankheit	2, 3, 4	1, 2
N04.0	Nephrotisches Syndrom: Minimale glomeruläre Läsion	2, 3, 4	2, 3
N04.1	Nephrotisches Syndrom: Fokale und segmentale glomeruläre Läsionen	2, 3, 4	1, 2
N04.2	Nephrotisches Syndrom: Diffuse membranöse Glomerulonephritis	2, 3, 4	1, 2
N04.3	Nephrotisches Syndrom: Diffuse mesangioproliferative Glomerulonephritis	2, 3, 4	2, 3
N04.4	Nephrotisches Syndrom: Diffuse endokapillär-proliferative Glomerulonephritis	2, 3, 4	2, 3
N04.5	Nephrotisches Syndrom: Diffuse mesangiokapilläre Glomerulonephritis	2, 3, 4	2, 3
N04.6	Nephrotisches Syndrom: Dense-deposit-Krankheit	2, 3, 4	2, 3
N04.7	Nephrotisches Syndrom: Glomerulonephritis mit diffuser Halbmondbildung	2, 3, 4	1, 2
N04.8	Nephrotisches Syndrom: Sonstige morphologische Veränderungen	2, 3, 4	1, 2
N04.9	Nephrotisches Syndrom: Art der morphologischen Veränderung nicht näher bezeichnet	2, 3, 4	1, 2
N10	Akute tubulointerstitielle Nephritis	2, 3, 4	2, 3
N12	Tubulointerstitielle Nephritis, nicht als akut oder chronisch bezeichnet	2, 3, 4	2, 3
N13.0	Hydronephrose bei ureteropelviner Obstruktion	2, 3, 4	1, 2, 3
N13.1	Hydronephrose bei Ureterstriktur, anderenorts nicht klassifiziert	2, 3, 4	1, 2, 3
N13.20	Hydronephrose bei Obstruktion durch Nierenstein	2, 3, 4	1, 2, 3
N13.21	Hydronephrose bei Obstruktion durch Ureterstein	2, 3, 4	1, 2, 3
N13.29	Hydronephrose bei Obstruktion durch Nieren- und Ureterstein, Steinlokalisation nicht näher bezeichnet	2, 3, 4	1, 2, 3
N13.4	Hydroureter	2, 3, 4	1, 2, 3
N13.60	Hydronephrose bei ureteropelviner Obstruktion mit Infektion der Niere	2, 3, 4	2, 3
N13.61	Hydronephrose bei Ureterstriktur, anderenorts nicht klassifiziert, mit Infektion der Niere	2, 3, 4	2, 3
N13.62	Hydronephrose bei Obstruktion durch Nierenstein mit Infektion der Niere	2, 3, 4	2, 3
N13.63	Hydronephrose bei Obstruktion durch Ureterstein mit Infektion der Niere	2, 3, 4	2, 3
N13.64	Hydronephrose bei Obstruktion durch Nieren- und Ureterstein, Steinlokalisation nicht näher bezeichnet, mit Infektion der Niere	2, 3, 4	2, 3
N13.65	Sonstige und nicht näher bezeichnete Hydronephrose mit Infektion der Niere	2, 3, 4	2, 3
N13.66	Hydroureter mit Infektion der Niere	2, 3, 4	2, 3

ICD	Beschreibung	OP CCL	Med. CCL
N13.67	Abknickung und Striktur des Ureters ohne Hydronephrose mit Infektion der Niere	2, 3, 4	2, 3
N13.68	Sonstige und nicht näher bezeichnete Pyonephrose	2, 3, 4	2, 3
N15.10	Nierenabszess	2, 3, 4	2, 3
N15.11	Perinephritischer Abszess	2, 3, 4	2, 3
N17.02	Akutes Nierenversagen mit Tubulusnekrose: Stadium 2	2	1, 2
N17.03	Akutes Nierenversagen mit Tubulusnekrose: Stadium 3	3, 4	2, 3
N17.12	Akutes Nierenversagen mit akuter Rindennekrose: Stadium 2	2	1, 2
N17.13	Akutes Nierenversagen mit akuter Rindennekrose: Stadium 3	3, 4	2, 3
N17.22	Akutes Nierenversagen mit Marknekrose: Stadium 2	2	1, 2
N17.23	Akutes Nierenversagen mit Marknekrose: Stadium 3	3, 4	2, 3
N17.82	Sonstiges akutes Nierenversagen: Stadium 2	2	1, 2
N17.83	Sonstiges akutes Nierenversagen: Stadium 3	3, 4	2, 3
N17.92	Akutes Nierenversagen, nicht näher bezeichnet: Stadium 2	1	1
N17.93	Akutes Nierenversagen, nicht näher bezeichnet: Stadium 3	3, 4	2, 3
N18.3	Chronische Nierenkrankheit, Stadium 3	1	1
N18.4	Chronische Nierenkrankheit, Stadium 4	2, 3, 4	2, 3
N18.5	Chronische Nierenkrankheit, Stadium 5	4	3
N20.1	Ureterstein	2, 3, 4	1, 2, 3
N30.0	Akute Zystitis	1	1
N30.1	Interstitielle Zystitis (chronisch)	2, 3, 4	2, 3
N30.4	Strahlenzystitis	2, 3, 4	1, 2
N31.2	Schlaffe neurogene Harnblase, anderenorts nicht klassifiziert	2, 3, 4	1, 2
N32.0	Blasenhalsobstruktion	2, 3, 4	1, 2
N32.1	Vesikointestinalfistel	2, 3, 4	2, 3
N32.2	Harnblasenfistel, anderenorts nicht klassifiziert	2, 3, 4	2, 3
N32.4	Harnblasenruptur, nichttraumatisch	2, 3, 4	2, 3
N33.0	Tuberkulöse Zystitis {A18.1}	2, 3, 4	2, 3
N33.8	Krankheiten der Harnblase bei sonstigen anderenorts klassifizierten Krankheiten	2, 3, 4	2, 3
N34.0	Harnröhrenabszess	2, 3, 4	2, 3
N35.0	Posttraumatische Harnröhrenstriktur	2	2
N39.3	Belastungsinkontinenz [Stressinkontinenz]	1	1
N39.40	Reflexinkontinenz	1	1
N39.41	Überlaufinkontinenz	1	1
N39.43	Extraurethrale Harninkontinenz	1	1
N39.47	Rezidivinkontinenz	1	1
N41.0	Akute Prostatitis	2	2
N41.2	Prostataabszess	2	2
N41.3	Prostatazystitis	2	2
N42.1	Kongestion und Blutung der Prostata	1	1
N43.1	Infizierte Hydrozele	2	2
N45.0	Orchitis, Epididymitis und Epididymoorchitis mit Abszess	2	2
N70.0	Akute Salpingitis und Oophoritis	2	2

ICD	Beschreibung	OP CCL	Med. CCL
N71.0	Akute entzündliche Krankheit des Uterus, ausgenommen der Zervix	2	2
N73.0	Akute Parametritis und Entzündung des Beckenbindegewebes	2	2
N73.3	Akute Pelveoperitonitis bei der Frau	2	2
N74.0	Tuberkulöse Infektion der Cervix uteri {A18.1}	2	2
N74.1	Tuberkulöse Entzündung im weiblichen Becken {A18.1}	2	2
N75.1	Bartholin-Abszess	2	2
N76.4	Abszess der Vulva	2	2
N82.0	Vesikovaginalfistel	2, 4	2, 3
N82.1	Sonstige Fisteln zwischen weiblichem Harn- und Genitaltrakt	2, 4	2, 3
N82.2	Fistel zwischen Vagina und Dünndarm	2, 4	2, 3
N82.3	Fistel zwischen Vagina und Dickdarm	2, 4	2, 3
N82.4	Sonstige Fisteln zwischen weiblichem Genital- und Darmtrakt	2, 4	2, 3
N82.5	Fisteln zwischen weiblichem Genitaltrakt und Haut	2, 4	2, 3
N83.7	Hämatom des Lig. latum uteri	1, 2	1
N98.0	Infektion im Zusammenhang mit artifizieller Insemination	2, 3, 4	2, 3
N98.2	Komplikationen bei versuchter Einführung eines befruchteten Eies nach In-vitro-Fertilisation	2, 3, 4	2, 3
N98.3	Komplikationen bei versuchter Implantation eines Embryos bei Embryotransfer	2, 3, 4	2, 3
N99.3	Prolaps des Scheidenstumpfes nach Hysterektomie	1, 2	1
O03.0	Spontanabort: Inkomplett, kompliziert durch Infektion des Genitaltraktes und des Beckens	2	2
O03.1	Spontanabort: Inkomplett, kompliziert durch Spätblutung oder verstärkte Blutung	2	2
O03.2	Spontanabort: Inkomplett, kompliziert durch Embolie	2	2
O03.4	Spontanabort: Inkomplett, ohne Komplikation	2	2
O03.5	Spontanabort: Komplett oder nicht näher bezeichnet, kompliziert durch Infektion des Genitaltraktes und des Beckens	2	2
O03.6	Spontanabort: Komplett oder nicht näher bezeichnet, kompliziert durch Spätblutung oder verstärkte Blutung	2	2
O03.7	Spontanabort: Komplett oder nicht näher bezeichnet, kompliziert durch Embolie	2	2
O03.9	Spontanabort: Komplett oder nicht näher bezeichnet, ohne Komplikation	2	2
O08.0	Infektion des Genitaltraktes und des Beckens nach Abort, Extrauteringravidität und Molenschwangerschaft	2	2
O08.1	Spätblutung oder verstärkte Blutung nach Abort, Extrauteringravidität und Molenschwangerschaft	2	2

ICD	Beschreibung	OP CCL	Med. CCL
O08.2	Embolie nach Abort, Extrauteringravidität und Molenschwangerschaft	2	2
O08.3	Schock nach Abort, Extrauteringravidität und Molenschwangerschaft	2	2
O08.4	Niereninsuffizienz nach Abort, Extrauteringravidität und Molenschwangerschaft	2	2
O08.5	Stoffwechselstörungen nach Abort, Extrauteringravidität und Molenschwangerschaft	2	2
O08.6	Verletzung von Beckenorganen und -geweben nach Abort, Extrauteringravidität und Molenschwangerschaft	2	2
O08.7	Sonstige Venenkrankheiten als Komplikation nach Abort, Extrauteringravidität und Molenschwangerschaft	2	2
O08.8	Sonstige Komplikationen nach Abort, Extrauteringravidität und Molenschwangerschaft	2	2
O11	Chronische Hypertonie mit aufgepfropfter Präeklampsie	2	2
O13	Gestationshypertonie [schwangerschaftsinduzierte Hypertonie]	2	2
O14.0	Leichte bis mäßige Präeklampsie	2	2
O14.1	Schwere Präeklampsie	2	2
O14.2	HELLP-Syndrom	2	2
O15.0	Eklampsie während der Schwangerschaft	2	2
O15.1	Eklampsie unter der Geburt	2	2
O15.2	Eklampsie im Wochenbett	2	2
O15.9	Eklampsie, bei der der zeitliche Bezug nicht angegeben ist	2	2
O20.0	Drohender Abort	2	2
O20.8	Sonstige Blutung in der Frühschwangerschaft	2	2
O22.2	Oberflächliche Thrombophlebitis in der Schwangerschaft	2	2
O22.3	Tiefe Venenthrombose in der Schwangerschaft	2	2
O22.5	Hirnvenenthrombose in der Schwangerschaft	2	2
O23.0	Infektionen der Niere in der Schwangerschaft	2	2
O23.1	Infektionen der Harnblase in der Schwangerschaft	2	2
O23.2	Infektionen der Urethra in der Schwangerschaft	2	2
O23.3	Infektionen von sonstigen Teilen der Harnwege in der Schwangerschaft	2	2
O23.5	Infektionen des Genitaltraktes in der Schwangerschaft	2	2
O24.0	Diabetes mellitus in der Schwangerschaft: Vorher bestehender Diabetes mellitus, Typ 1	1, 2	1, 2
O24.1	Diabetes mellitus in der Schwangerschaft: Vorher bestehender Diabetes mellitus, Typ 2	1, 2	1, 2
O24.2	Diabetes mellitus in der Schwangerschaft: Vorher bestehender Diabetes mellitus durch Fehl- oder Mangelernährung [Malnutrition]	1, 2	1, 2
O24.4	Diabetes mellitus, während der Schwangerschaft auftretend	1, 2	1, 2
O26.60	Schwangerschaftscholestase	2	2
O26.68	Sonstige Leberkrankheiten während der Schwangerschaft, der Geburt und des Wochenbettes	2	2
O29.0	Pulmonale Komplikationen bei Anästhesie in der Schwangerschaft	2	2
O29.1	Kardiale Komplikationen bei Anästhesie in der Schwangerschaft	2	2
O29.2	Komplikationen des Zentralnervensystems bei Anästhesie in der Schwangerschaft	2	2
O29.3	Toxische Reaktion auf Lokalanästhesie in der Schwangerschaft	2	2
O29.4	Kopfschmerzen nach Spinal- oder Periduralanästhesie in der Schwangerschaft	2	2
O29.5	Sonstige Komplikationen nach Spinal- oder Periduralanästhesie in der Schwangerschaft	2	2
O29.6	Misslingen oder Schwierigkeiten bei der Intubation in der Schwangerschaft	2	2
O29.8	Sonstige Komplikationen bei Anästhesie in der Schwangerschaft	2	2
O43.20	Placenta accreta	2	2
O43.21	Placenta increta oder percreta	2	2
O44.00	Tiefer Sitz der Plazenta ohne (aktuelle) Blutung	2	2
O44.01	Placenta praevia ohne (aktuelle) Blutung	2	2
O44.10	Tiefer Sitz der Plazenta mit aktueller Blutung	2	2
O44.11	Placenta praevia mit aktueller Blutung	2	2
O45.0	Vorzeitige Plazentalösung bei Gerinnungsstörung	2	2
O46.0	Präpartale Blutung bei Gerinnungsstörung	2	2
O46.8	Sonstige präpartale Blutung	2	2
O47.0	Frustrane Kontraktionen vor 37 vollendeten Schwangerschaftswochen	2	2
O67.0	Intrapartale Blutung bei Gerinnungsstörung	2	2
O67.8	Sonstige intrapartale Blutung	2	2
O68.0	Komplikationen bei Wehen und Entbindung durch abnorme fetale Herzfrequenz	1	1
O68.1	Komplikationen bei Wehen und Entbindung durch Mekonium im Fruchtwasser	1	1
O68.2	Komplikationen bei Wehen und Entbindung durch abnorme fetale Herzfrequenz mit Mekonium im Fruchtwasser	1	1

ICD	Beschreibung	OP CCL	Med. CCL
O68.3	Komplikationen bei Wehen und Entbindung durch fetalen Distress, biochemisch nachgewiesen	1	1
O68.8	Komplikationen bei Wehen und Entbindung durch fetalen Distress, mittels anderer Untersuchungsmethoden nachgewiesen	1	1
O71.0	Uterusruptur vor Wehenbeginn	2	2
O71.1	Uterusruptur während der Geburt	2	2
O72.3	Postpartale Gerinnungsstörungen	2	2
O74.0	Aspirationspneumonie durch Anästhesie während der Wehentätigkeit und bei der Entbindung	2	2
O74.1	Sonstige pulmonale Komplikationen bei Anästhesie während der Wehentätigkeit und bei der Entbindung	2	2
O74.2	Kardiale Komplikationen bei Anästhesie während der Wehentätigkeit und bei der Entbindung	2	2
O74.3	Komplikationen des Zentralnervensystems bei Anästhesie während der Wehentätigkeit und bei der Entbindung	2	2
O74.4	Toxische Reaktion auf Lokalanästhesie während der Wehentätigkeit und bei der Entbindung	2	2
O74.5	Kopfschmerzen nach Spinal- oder Periduralanästhesie während der Wehentätigkeit und bei der Entbindung	2	2
O74.6	Sonstige Komplikationen bei Spinal- oder Periduralanästhesie während der Wehentätigkeit und bei der Entbindung	2	2
O74.7	Misslingen oder Schwierigkeiten bei der Intubation während der Wehentätigkeit und bei der Entbindung	2	2
O74.8	Sonstige Komplikationen bei Anästhesie während der Wehentätigkeit und bei der Entbindung	2	2
O75.1	Schock während oder nach Wehentätigkeit und Entbindung	2	2
O75.3	Sonstige Infektion unter der Geburt	2	2
O85	Puerperalfieber	2	2
O86.0	Infektion der Wunde nach operativem geburtshilflichem Eingriff	2	2
O86.1	Sonstige Infektion des Genitaltraktes nach Entbindung	2	2
O86.3	Sonstige Infektionen des Urogenitaltraktes nach Entbindung	2	2
O86.8	Sonstige näher bezeichnete Wochenbettinfektionen	2	2
O87.0	Oberflächliche Thrombophlebitis im Wochenbett	2	2
O87.1	Tiefe Venenthrombose im Wochenbett	2	2
O87.3	Hirnvenenthrombose im Wochenbett	2	2
O88.0	Luftembolie während der Gestationsperiode	2	2
O88.1	Fruchtwasserembolie	2	2
O88.20	Lungenembolie während der Gestationsperiode	2	2
O88.28	Sonstige Thromboembolie während der Gestationsperiode	2	2
O88.3	Pyämische und septische Embolie während der Gestationsperiode	2	2
O88.8	Sonstige Embolie während der Gestationsperiode	2	2
O89.0	Pulmonale Komplikationen bei Anästhesie im Wochenbett	2	2
O89.1	Kardiale Komplikationen bei Anästhesie im Wochenbett	2	2
O89.2	Komplikationen des Zentralnervensystems bei Anästhesie im Wochenbett	2	2
O89.3	Toxische Reaktion auf Lokalanästhesie im Wochenbett	2	2
O90.1	Dehiszenz einer geburtshilflichen Dammwunde	2	2
O90.3	Kardiomyopathie im Wochenbett	2	2
O90.4	Postpartales akutes Nierenversagen	2	2
O98.0	Tuberkulose, die Schwangerschaft, Geburt und Wochenbett kompliziert	2	2
O99.0	Anämie, die Schwangerschaft, Geburt und Wochenbett kompliziert	2	2
O99.4	Krankheiten des Kreislaufsystems, die Schwangerschaft, Geburt und Wochenbett komplizieren	2	2
P07.00	Neugeborenes: Geburtsgewicht unter 500 Gramm	2, 3, 4	1, 2, 3
P07.01	Neugeborenes: Geburtsgewicht 500 bis unter 750 Gramm	2, 3, 4	1, 2, 3
P07.02	Neugeborenes: Geburtsgewicht 750 bis unter 1000 Gramm	2, 3, 4	1, 2, 3
P07.2	Neugeborenes mit extremer Unreife	2, 3, 4	1, 2, 3
P11.50	Geburtsverletzung der Wirbelsäule und des Rückenmarkes: Mit akuter Querschnittlähmung	2, 4	2, 3
P11.51	Geburtsverletzung der Wirbelsäule und des Rückenmarkes: Mit chronischer Querschnittlähmung	2, 4	2, 3
P11.59	Geburtsverletzung der Wirbelsäule und des Rückenmarkes: Nicht näher bezeichnet	2, 4	2, 3
P21.0	Schwere Asphyxie unter der Geburt	1, 2	2
P27.0	Mikity-Wilson-Syndrom	2, 3	2
P27.1	Bronchopulmonale Dysplasie mit Ursprung in der Perinatalperiode	2, 3	2
P27.8	Sonstige chronische Atemwegskrankheiten mit Ursprung in der Perinatalperiode	2, 3	2

ICD	Beschreibung	OP CCL	Med. CCL
P35.0	Rötelnembryopathie	2, 4	2
P35.1	Angeborene Zytomegalie	2, 4	2
P35.2	Angeborene Infektion durch Herpesviren [Herpes simplex]	2	2
P35.3	Angeborene Virushepatitis	1, 2, 3	1, 2, 3
P35.8	Sonstige angeborene Viruskrankheiten	2	2
P52.2	Intraventrikuläre (nichttraumatische) Blutung 3. Grades beim Fetus und Neugeborenen	2, 3, 4	1, 2, 3
P55.0	Rh-Isoimmunisierung beim Fetus und Neugeborenen	2, 3	1, 2, 3
P55.1	AB0-Isoimmunisierung beim Fetus und Neugeborenen	2, 3	1, 2, 3
P55.8	Sonstige hämolytische Krankheiten beim Fetus und Neugeborenen	2, 3	1, 2, 3
P59.1	Gallepfropf-Syndrom	1, 2, 3	1, 2, 3
P59.2	Neugeborenenikterus durch sonstige und nicht näher bezeichnete Leberzellschädigung	1, 2, 3	1, 2, 3
P70.2	Diabetes mellitus beim Neugeborenen	2	2, 3
P70.3	Iatrogene Hypoglykämie beim Neugeborenen	2, 3	2
P70.4	Sonstige Hypoglykämie beim Neugeborenen	2, 3	2
P71.0	Kuhmilch-Hypokalzämie beim Neugeborenen	2, 3, 4	2, 3
P71.1	Sonstige Hypokalzämie beim Neugeborenen	2, 3, 4	2, 3
P71.2	Hypomagnesiämie beim Neugeborenen	2, 3, 4	2, 3
P71.3	Tetanie beim Neugeborenen, ohne Kalzium- oder Magnesiummangel	2, 3, 4	2, 3
P71.4	Transitorischer Hypoparathyreoidismus beim Neugeborenen	2, 3, 4	2, 3
P71.8	Sonstige transitorische Störungen des Kalzium- und Magnesiumstoffwechsels beim Neugeborenen	2, 3, 4	2, 3
P72.0	Struma beim Neugeborenen, anderenorts nicht klassifiziert	2, 3, 4	2, 3
P74.0	Metabolische Spätazidose beim Neugeborenen	2, 3, 4	2, 3
P74.1	Dehydratation beim Neugeborenen	2, 3, 4	2, 3
P74.2	Störungen des Natriumgleichgewichtes beim Neugeborenen	2, 3, 4	2, 3
P74.3	Störungen des Kaliumgleichgewichtes beim Neugeborenen	2, 3, 4	2, 3
P74.4	Sonstige transitorische Störungen des Elektrolythaushaltes beim Neugeborenen	2, 3, 4	2, 3
P76.2	Darmverschluss beim Neugeborenen durch eingedickte Milch	2, 3, 4	2, 3
P77	Enterocolitis necroticans beim Fetus und Neugeborenen	2, 4	2, 3
P90	Krämpfe beim Neugeborenen	1, 2, 3, 4	1, 2
P91.3	Zerebrale Übererregbarkeit des Neugeborenen	1, 2	2
P91.5	Koma beim Neugeborenen	3, 4	3
P91.7	Erworbener Hydrozephalus beim Neugeborenen	2, 3	1, 2, 3
P92.0	Erbrechen beim Neugeborenen	1, 2	1, 2, 3
P92.1	Regurgitation und Rumination beim Neugeborenen	2, 3, 4	2, 3
P92.2	Trinkunlust beim Neugeborenen	1, 2	1, 2, 3
P92.3	Unterernährung beim Neugeborenen	2, 3, 4	2, 3
P92.4	Überernährung beim Neugeborenen	2, 3, 4	2, 3
P92.5	Schwierigkeit beim Neugeborenen bei Brusternährung	2, 3, 4	2, 3
P94.0	Transitorische Myasthenia gravis beim Neugeborenen	2, 3	1, 2, 3
Q00.0	Anenzephalie	3, 4	3
Q00.1	Kraniorhachischisis	3, 4	3
Q00.2	Inienzephalie	3, 4	3
Q01.0	Frontale Enzephalozele	3, 4	3
Q01.1	Nasofrontale Enzephalozele	3, 4	3
Q01.2	Okzipitale Enzephalozele	3, 4	3
Q01.8	Enzephalozele sonstiger Lokalisationen	3, 4	3
Q02	Mikrozephalie	3, 4	3
Q03.0	Fehlbildungen des Aquaeductus cerebri	3, 4	3
Q03.1	Atresie der Apertura mediana [Foramen Magendii] oder der Aperturae laterales [Foramina Luschkae] des vierten Ventrikels	3, 4	3
Q03.8	Sonstiger angeborener Hydrozephalus	2, 3	1, 2, 3
Q04.0	Angeborene Fehlbildungen des Corpus callosum	3, 4	3
Q04.1	Arrhinenzephalie	3, 4	3
Q04.2	Holoprosenzephalie-Syndrom	3, 4	3
Q04.3	Sonstige Reduktionsdeformitäten des Gehirns	3, 4	3
Q04.4	Septooptische Dysplasie	3, 4	3
Q04.5	Megalenzephalie	3, 4	3
Q04.6	Angeborene Gehirnzysten	3, 4	3
Q05.0	Zervikale Spina bifida mit Hydrozephalus	3, 4	3
Q05.1	Thorakale Spina bifida mit Hydrozephalus	3, 4	3
Q05.2	Lumbale Spina bifida mit Hydrozephalus	3, 4	3
Q05.3	Sakrale Spina bifida mit Hydrozephalus	3, 4	3
Q05.5	Zervikale Spina bifida ohne Hydrozephalus	3, 4	3
Q05.6	Thorakale Spina bifida ohne Hydrozephalus	3, 4	3
Q05.7	Lumbale Spina bifida ohne Hydrozephalus	3, 4	3
Q05.8	Sakrale Spina bifida ohne Hydrozephalus	3, 4	3
Q06.0	Amyelie	3, 4	3
Q06.1	Hypoplasie und Dysplasie des Rückenmarks	3, 4	3
Q06.2	Diastematomyelie	3, 4	3
Q06.3	Sonstige angeborene Fehlbildungen der Cauda equina	3, 4	3
Q06.4	Hydromyelie	3, 4	3
Q06.8	Sonstige näher bezeichnete angeborene Fehlbildungen des Rückenmarks	3, 4	3
Q07.0	Arnold-Chiari-Syndrom	3, 4	3

ICD	Beschreibung	OP CCL	Med. CCL
Q07.8	Sonstige näher bezeichnete angeborene Fehlbildungen des Nervensystems	3, 4	3
Q11.0	Zystenauge [cystic eyeball]	3, 4	3
Q11.1	Sonstiger Anophthalmus	3, 4	3
Q11.2	Mikrophthalmus	3, 4	3
Q11.3	Makrophthalmus	3, 4	3
Q20.0	Truncus arteriosus communis	3, 4	3
Q20.1	Rechter Doppelausstromventrikel [Double outlet right ventricle]	3, 4	3
Q20.2	Linker Doppelausstromventrikel [Double outlet left ventricle]	3, 4	3
Q20.3	Diskordante ventrikuloarterielle Verbindung	3, 4	3
Q20.4	Doppeleinstromventrikel [Double inlet ventricle]	3, 4	3
Q20.5	Diskordante atrioventrikuläre Verbindung	3, 4	3
Q20.6	Vorhofisomerismus	3, 4	3
Q20.8	Sonstige angeborene Fehlbildungen der Herzhöhlen und verbindender Strukturen	3, 4	3
Q21.0	Ventrikelseptumdefekt	2, 3	2
Q21.1	Vorhofseptumdefekt	2, 3	2
Q21.2	Defekt des Vorhof- und Kammerseptums	2, 3	2
Q21.3	Fallot-Tetralogie	2, 3	2
Q21.4	Aortopulmonaler Septumdefekt	2, 3	2
Q21.80	Fallot-Pentalogie	2, 3	2
Q21.88	Sonstige angeborene Fehlbildungen der Herzsepten	2, 3	2
Q22.0	Pulmonalklappenatresie	3, 4	3
Q22.1	Angeborene Pulmonalklappenstenose	3, 4	3
Q22.2	Angeborene Pulmonalklappeninsuffizienz	1, 2, 3	1, 2
Q22.3	Sonstige angeborene Fehlbildungen der Pulmonalklappe	1, 2, 3	1, 2
Q22.4	Angeborene Trikuspidalklappenstenose	1, 2, 3	1, 2
Q22.5	Ebstein-Anomalie	2, 3	2, 3
Q22.6	Hypoplastisches Rechtsherzsyndrom	3, 4	3
Q22.8	Sonstige angeborene Fehlbildungen der Trikuspidalklappe	1, 2, 3	1, 2
Q23.0	Angeborene Aortenklappenstenose	3, 4	3
Q23.1	Angeborene Aortenklappeninsuffizienz	1, 2, 3	1, 2
Q23.2	Angeborene Mitralklappenstenose	1, 2, 3	1, 2
Q23.3	Angeborene Mitralklappeninsuffizienz	1, 2, 3	1, 2
Q23.4	Hypoplastisches Linksherzsyndrom	3, 4	3
Q23.8	Sonstige angeborene Fehlbildungen der Aorten- und Mitralklappe	1, 2, 3	1, 2
Q24.0	Dextrokardie	3, 4	3
Q24.1	Lävokardie	3, 4	3
Q24.2	Cor triatriatum	3, 4	3
Q24.3	Infundibuläre Pulmonalstenose	3, 4	3
Q24.4	Angeborene subvalvuläre Aortenstenose	1, 2, 3	1, 2
Q24.6	Angeborener Herzblock	3, 4	3
Q25.0	Offener Ductus arteriosus	3, 4	3
Q25.1	Koarktation der Aorta	3, 4	3
Q25.2	Atresie der Aorta	3, 4	3
Q25.3	Stenose der Aorta (angeboren)	1, 2, 3	1, 2
Q25.5	Atresie der A. pulmonalis	3, 4	3
Q25.6	Stenose der A. pulmonalis (angeboren)	3, 4	3
Q25.7	Sonstige angeborene Fehlbildungen der A. pulmonalis	3, 4	3
Q26.0	Angeborene Stenose der V. cava	3, 4	3
Q26.1	Persistenz der linken V. cava superior	3, 4	3
Q26.2	Totale Fehleinmündung der Lungenvenen	3, 4	3
Q26.3	Partielle Fehleinmündung der Lungenvenen	3, 4	3
Q26.5	Fehleinmündung der Pfortader	3, 4	3
Q26.6	Fistel zwischen V. portae und A. hepatica (angeboren)	3, 4	3
Q27.0	Angeborenes Fehlen oder Hypoplasie der A. umbilicalis	3, 4	3
Q28.00	Angeborenes arteriovenöses Aneurysma der präzerebralen Gefäße	3, 4	3
Q28.01	Angeborene arteriovenöse Fistel der präzerebralen Gefäße	3, 4	3
Q28.08	Sonstige angeborene arteriovenöse Fehlbildungen der präzerebralen Gefäße	3, 4	3
Q28.10	Angeborenes Aneurysma der präzerebralen Gefäße	3, 4	3
Q28.11	Angeborene Fistel der präzerebralen Gefäße	3, 4	3
Q28.18	Sonstige angeborene Fehlbildungen der präzerebralen Gefäße	3, 4	3
Q28.20	Angeborenes arteriovenöses Aneurysma der zerebralen Gefäße	3, 4	3
Q28.21	Angeborene arteriovenöse Fistel der zerebralen Gefäße	3, 4	3
Q28.28	Sonstige angeborene arteriovenöse Fehlbildungen der zerebralen Gefäße	3, 4	3
Q28.30	Angeborenes Aneurysma der zerebralen Gefäße	3, 4	3
Q28.31	Angeborene Fistel der zerebralen Gefäße	3, 4	3
Q31.0	Kehlkopfsegel	3, 4	3
Q31.1	Angeborene subglottische Stenose	3, 4	3
Q31.2	Hypoplasie des Kehlkopfes	3, 4	3
Q31.3	Laryngozele (angeboren)	3, 4	3
Q31.5	Angeborene Laryngomalazie	3, 4	3
Q31.8	Sonstige angeborene Fehlbildungen des Kehlkopfes	3, 4	3
Q32.0	Angeborene Tracheomalazie	3, 4	3
Q32.1	Sonstige angeborene Fehlbildungen der Trachea	3, 4	3
Q32.2	Angeborene Bronchomalazie	3, 4	3
Q32.3	Angeborene Bronchusstenose	3, 4	3
Q32.4	Sonstige angeborene Fehlbildungen der Bronchien	3, 4	3
Q33.0	Angeborene Zystenlunge	3, 4	3
Q33.1	Akzessorischer Lungenlappen	3, 4	3
Q33.2	Lungensequestration (angeboren)	3, 4	3
Q33.3	Agenesie der Lunge	3, 4	3
Q33.4	Angeborene Bronchiektasie	3, 4	3
Q33.5	Ektopisches Gewebe in der Lunge (angeboren)	3, 4	3

ICD	Beschreibung	OP CCL	Med. CCL
Q33.6	Hypoplasie und Dysplasie der Lunge	3, 4	3
Q33.8	Sonstige angeborene Fehlbildungen der Lunge	3, 4	3
Q35.1	Spalte des harten Gaumens	3, 4	3
Q35.5	Spalte des harten und des weichen Gaumens	3, 4	3
Q37.0	Spalte des harten Gaumens mit beidseitiger Lippenspalte	3, 4	3
Q37.1	Spalte des harten Gaumens mit einseitiger Lippenspalte	3, 4	3
Q37.2	Spalte des weichen Gaumens mit beidseitiger Lippenspalte	3, 4	3
Q37.3	Spalte des weichen Gaumens mit einseitiger Lippenspalte	3, 4	3
Q37.4	Spalte des harten und des weichen Gaumens mit beidseitiger Lippenspalte	3, 4	3
Q37.5	Spalte des harten und des weichen Gaumens mit einseitiger Lippenspalte	3, 4	3
Q39.0	Ösophagusatresie ohne Fistel	3, 4	3
Q39.1	Ösophagusatresie mit Ösophagotrachealfistel	3, 4	3
Q39.2	Angeborene Ösophagotrachealfistel ohne Atresie	3, 4	3
Q39.4	Angeborene Ösophagusmembran	2, 4	2, 3
Q41.0	Angeborene(s) Fehlen, Atresie und Stenose des Duodenums	3, 4	3
Q41.1	Angeborene(s) Fehlen, Atresie und Stenose des Jejunums	3, 4	3
Q41.2	Angeborene(s) Fehlen, Atresie und Stenose des Ileums	3, 4	3
Q41.8	Angeborene(s) Fehlen, Atresie und Stenose sonstiger näher bezeichneter Teile des Dünndarmes	3, 4	3
Q42.0	Angeborene(s) Fehlen, Atresie und Stenose des Rektums mit Fistel	3, 4	3
Q42.1	Angeborene(s) Fehlen, Atresie und Stenose des Rektums ohne Fistel	3, 4	3
Q42.2	Angeborene(s) Fehlen, Atresie und Stenose des Anus mit Fistel	3, 4	3
Q42.3	Angeborene(s) Fehlen, Atresie und Stenose des Anus ohne Fistel	3, 4	3
Q42.8	Angeborene(s) Fehlen, Atresie und Stenose sonstiger Teile des Dickdarmes	3, 4	3
Q43.1	Hirschsprung-Krankheit	3, 4	3
Q43.40	Duplikatur des Dünndarmes	3, 4	3
Q43.41	Duplikatur des Kolons	3, 4	3
Q43.42	Duplikatur des Rektums	3, 4	3
Q43.5	Ektopia ani	3, 4	3
Q43.6	Angeborene Fistel des Rektums und des Anus	3, 4	3
Q43.7	Kloakenpersistenz	3, 4	3
Q44.0	Agenesie, Aplasie und Hypoplasie der Gallenblase	3, 4	3
Q44.2	Atresie der Gallengänge	3, 4	3
Q44.3	Angeborene Stenose und Striktur der Gallengänge	3, 4	3
Q44.4	Choledochuszyste	3, 4	3
Q44.5	Sonstige angeborene Fehlbildungen der Gallengänge	2, 3, 4	2, 3
Q44.6	Zystische Leberkrankheit [Zystenleber]	3, 4	3
Q45.0	Agenesie, Aplasie und Hypoplasie des Pankreas	3, 4	3
Q50.0	Angeborenes Fehlen des Ovars	3, 4	3
Q50.2	Angeborene Torsion des Ovars	3, 4	3
Q51.0	Agenesie und Aplasie des Uterus	3, 4	3
Q51.1	Uterus duplex mit Uterus bicollis und Vagina duplex	3, 4	3
Q51.2	Sonstige Formen des Uterus duplex	3, 4	3
Q51.5	Agenesie und Aplasie der Cervix uteri	3, 4	3
Q51.7	Angeborene Fisteln zwischen Uterus und Verdauungs- oder Harntrakt	3, 4	3
Q52.0	Angeborenes Fehlen der Vagina	3, 4	3
Q52.1	Vagina duplex	3, 4	3
Q52.2	Angeborene rektovaginale Fistel	3, 4	3
Q54.0	Glanduläre Hypospadie	3, 4	3
Q54.1	Penile Hypospadie	3, 4	3
Q54.2	Penoskrotale Hypospadie	3, 4	3
Q54.3	Perineale Hypospadie	3, 4	3
Q55.0	Fehlen und Aplasie des Hodens	3, 4	3
Q55.1	Hypoplasie des Hodens und des Skrotums	3, 4	3
Q55.3	Atresie des Ductus deferens	3, 4	3
Q55.4	Sonstige angeborene Fehlbildungen des Ductus deferens, des Nebenhodens, der Vesiculae seminales und der Prostata	3, 4	3
Q55.5	Angeborenes Fehlen und Aplasie des Penis	3, 4	3
Q55.6	Sonstige angeborene Fehlbildungen des Penis	3, 4	3
Q56.0	Hermaphroditismus, anderenorts nicht klassifiziert	3, 4	3
Q56.1	Pseudohermaphroditismus masculinus, anderenorts nicht klassifiziert	3, 4	3
Q56.2	Pseudohermaphroditismus femininus, anderenorts nicht klassifiziert	3, 4	3
Q56.3	Pseudohermaphroditismus, nicht näher bezeichnet	3, 4	3
Q56.4	Unbestimmtes Geschlecht, nicht näher bezeichnet	3, 4	3
Q60.1	Nierenagenesie, beidseitig	3, 4	3
Q60.6	Potter-Syndrom	3, 4	3
Q61.1	Polyzystische Niere, autosomal-rezessiv	3, 4	3
Q61.2	Polyzystische Niere, autosomal-dominant	3, 4	3
Q62.0	Angeborene Hydronephrose	3, 4	3
Q62.1	Atresie und (angeborene) Stenose des Ureters	3, 4	3
Q62.2	Angeborener Megaureter	3, 4	3
Q62.3	Sonstige (angeborene) obstruktive Defekte des Nierenbeckens und des Ureters	3, 4	3
Q62.4	Agenesie des Ureters	3, 4	3
Q62.7	Angeborener vesiko-uretero-renaler Reflux	3, 4	3
Q64.0	Epispadie	3, 4	3
Q64.1	Ekstrophie der Harnblase	3, 4	3
Q64.4	Fehlbildung des Urachus	3, 4	3
Q64.5	Angeborenes Fehlen der Harnblase und der Urethra	3, 4	3

ICD	Beschreibung	OP CCL	Med. CCL
Q65.0	Angeborene Luxation des Hüftgelenkes, einseitig	2, 3, 4	2, 3
Q65.1	Angeborene Luxation des Hüftgelenkes, beidseitig	3, 4	2, 3
Q65.3	Angeborene Subluxation des Hüftgelenkes, einseitig	2, 3, 4	2, 3
Q65.4	Angeborene Subluxation des Hüftgelenkes, beidseitig	3, 4	3
Q65.6	Instabiles Hüftgelenk (angeboren)	3, 4	3
Q67.2	Dolichozephalie	3, 4	3
Q67.3	Plagiozephalie	3, 4	3
Q71.0	Angeborenes vollständiges Fehlen der oberen Extremität(en)	3, 4	3
Q71.1	Angeborenes Fehlen des Ober- und Unterarmes bei vorhandener Hand	3, 4	3
Q71.2	Angeborenes Fehlen sowohl des Unterarmes als auch der Hand	3, 4	3
Q71.3	Angeborenes Fehlen der Hand oder eines oder mehrerer Finger	3, 4	3
Q71.4	Longitudinaler Reduktionsdefekt des Radius	3, 4	3
Q71.5	Longitudinaler Reduktionsdefekt der Ulna	3, 4	3
Q71.6	Spalthand	3, 4	3
Q71.8	Sonstige Reduktionsdefekte der oberen Extremität(en)	3, 4	3
Q72.0	Angeborenes vollständiges Fehlen der unteren Extremität(en)	3, 4	3
Q72.1	Angeborenes Fehlen des Ober- und Unterschenkels bei vorhandenem Fuß	3, 4	3
Q72.2	Angeborenes Fehlen sowohl des Unterschenkels als auch des Fußes	3, 4	3
Q72.3	Angeborenes Fehlen des Fußes oder einer oder mehrerer Zehen	3, 4	3
Q72.4	Longitudinaler Reduktionsdefekt des Femurs	3, 4	3
Q72.5	Longitudinaler Reduktionsdefekt der Tibia	3, 4	3
Q72.6	Longitudinaler Reduktionsdefekt der Fibula	3, 4	3
Q72.7	Spaltfuß	3, 4	3
Q72.8	Sonstige Reduktionsdefekte der unteren Extremität(en)	3, 4	3
Q74.3	Arthrogryposis multiplex congenita	3, 4	2, 3
Q75.0	Kraniosynostose	3, 4	3
Q75.1	Dysostosis craniofacialis	3, 4	3
Q75.2	Hypertelorismus	3, 4	3
Q75.3	Makrozephalie	3, 4	3
Q75.4	Dysostosis mandibulofacialis	3, 4	3
Q75.5	Okulo-mandibulo-faziales Syndrom	3, 4	3
Q75.8	Sonstige näher bezeichnete angeborene Fehlbildungen der Schädel- und Gesichtsschädelknochen	3, 4	3
Q76.1	Klippel-Feil-Syndrom	3, 4	3
Q76.3	Angeborene Skoliose durch angeborene Knochenfehlbildung	3, 4	3
Q77.0	Achondrogenesie	3, 4	3
Q77.1	Thanatophore Dysplasie	3, 4	3
Q77.2	Kurzripp-Polydaktylie-Syndrome	3, 4	3
Q77.3	Chondrodysplasia-punctata-Syndrome	3, 4	3
Q77.4	Achondroplasie	3, 4	3
Q77.5	Diastrophische Dysplasie	3, 4	3
Q77.6	Chondroektodermale Dysplasie	3, 4	3
Q77.7	Dysplasia spondyloepiphysaria	3, 4	3
Q77.8	Sonstige Osteochondrodysplasien mit Wachstumsstörungen der Röhrenknochen und der Wirbelsäule	3, 4	3
Q78.0	Osteogenesis imperfecta	3, 4	3
Q78.1	Polyostotische fibröse Dysplasie [Jaffé-Lichtenstein-Syndrom]	3, 4	3
Q78.2	Marmorknochenkrankheit	3, 4	3
Q78.3	Progrediente diaphysäre Dysplasie	3, 4	3
Q78.4	Enchondromatose	3, 4	3
Q78.5	Metaphysäre Dysplasie	3, 4	3
Q78.6	Angeborene multiple Exostosen	3, 4	3
Q78.8	Sonstige näher bezeichnete Osteochondrodysplasien	3, 4	3
Q79.0	Angeborene Zwerchfellhernie	3, 4	3
Q79.1	Sonstige angeborene Fehlbildungen des Zwerchfells	3, 4	3
Q79.2	Exomphalus	3, 4	3
Q79.3	Gastroschisis	3, 4	3
Q79.4	Bauchdeckenaplasie-Syndrom	3, 4	3
Q79.6	Ehlers-Danlos-Syndrom	3, 4	3
Q79.8	Sonstige angeborene Fehlbildungen des Muskel-Skelett-Systems	3, 4	3
Q81.0	Epidermolysis bullosa simplex	3, 4	3
Q81.1	Epidermolysis bullosa atrophicans gravis	3, 4	3
Q81.2	Epidermolysis bullosa dystrophica	3, 4	3
Q81.8	Sonstige Epidermolysis bullosa	3, 4	3
Q85.0	Neurofibromatose (nicht bösartig)	3, 4	3
Q85.1	Tuberöse (Hirn-) Sklerose	3, 4	3
Q85.8	Sonstige Phakomatosen, anderenorts nicht klassifiziert	3, 4	3
Q86.0	Alkohol-Embryopathie (mit Dysmorphien)	3, 4	3
Q86.1	Antiepileptika-Embryopathie	3, 4	3
Q86.2	Warfarin-Embryopathie	3, 4	3
Q86.80	Thalidomid-Embryopathie	3, 4	3
Q86.88	Sonstige angeborene Fehlbildungssyndrome durch bekannte äußere Ursachen	3, 4	3
Q87.0	Angeborene Fehlbildungssyndrome mit vorwiegender Beteiligung des Gesichtes	3, 4	3
Q87.1	Angeborene Fehlbildungssyndrome, die vorwiegend mit Kleinwuchs einhergehen	3, 4	3
Q87.2	Angeborene Fehlbildungssyndrome mit vorwiegender Beteiligung der Extremitäten	3, 4	3
Q87.3	Angeborene Fehlbildungssyndrome mit vermehrtem Gewebewachstum im frühen Kindesalter	3, 4	3
Q87.4	Marfan-Syndrom	3, 4	3
Q87.5	Sonstige angeborene Fehlbildungssyndrome mit sonstigen Skelettveränderungen	3, 4	3

ICD	Beschreibung	OP CCL	Med. CCL
Q87.8	Sonstige näher bezeichnete angeborene Fehlbildungssyndrome, anderenorts nicht klassifiziert	3, 4	3
Q89.4	Siamesische Zwillinge	3, 4	3
Q90.0	Trisomie 21, meiotische Non-disjunction	3, 4	3
Q90.1	Trisomie 21, Mosaik (mitotische Non-disjunction)	3, 4	3
Q90.2	Trisomie 21, Translokation	3, 4	3
Q90.9	Down-Syndrom, nicht näher bezeichnet	3, 4	3
Q91.0	Trisomie 18, meiotische Non-disjunction	3, 4	3
Q91.1	Trisomie 18, Mosaik (mitotische Non-disjunction)	3, 4	3
Q91.2	Trisomie 18, Translokation	3, 4	3
Q91.3	Edwards-Syndrom, nicht näher bezeichnet	3, 4	3
Q91.4	Trisomie 13, meiotische Non-disjunction	3, 4	3
Q91.5	Trisomie 13, Mosaik (mitotische Non-disjunction)	3, 4	3
Q91.6	Trisomie 13, Translokation	3, 4	3
Q91.7	Patau-Syndrom, nicht näher bezeichnet	3, 4	3
Q92.0	Vollständige Trisomie, meiotische Non-disjunction	3, 4	3
Q92.1	Vollständige Trisomie, Mosaik (mitotische Non-disjunction)	3, 4	3
Q92.2	Partielle Trisomie, Majorform	3, 4	3
Q92.3	Partielle Trisomie, Minorform	3, 4	3
Q92.4	Chromosomenduplikationen, die nur in der Prometaphase sichtbar werden	3, 4	3
Q92.5	Chromosomenduplikationen mit sonstigen komplexen Rearrangements	3, 4	3
Q92.6	Überzählige Marker-Chromosomen	3, 4	3
Q92.7	Triploidie und Polyploidie	3, 4	3
Q92.8	Sonstige näher bezeichnete Trisomien und partielle Trisomien der Autosomen	3, 4	3
Q93.0	Vollständige Monosomie, meiotische Non-disjunction	3, 4	3
Q93.1	Vollständige Monosomie, Mosaik (mitotische Non-disjunction)	3, 4	3
Q93.2	Ringchromosomen und dizentrische Chromosomen	3, 4	3
Q93.3	Deletion des kurzen Armes des Chromosoms 4	3, 4	3
Q93.4	Deletion des kurzen Armes des Chromosoms 5	3, 4	3
Q93.5	Sonstige Deletionen eines Chromosomenteils	3, 4	3
Q93.6	Deletionen, die nur in der Prometaphase sichtbar werden	3, 4	3
Q93.7	Deletionen mit sonstigen komplexen Rearrangements	3, 4	3
Q93.8	Sonstige Deletionen der Autosomen	3, 4	3
Q95.0	Balancierte Translokation und Insertion beim normalen Individuum	3, 4	3
Q95.1	Chromosomen-Inversion beim normalen Individuum	3, 4	3
Q95.2	Balanciertes Rearrangement der Autosomen beim abnormen Individuum	3, 4	3
Q95.3	Balanciertes Rearrangement zwischen Gonosomen und Autosomen beim abnormen Individuum	3, 4	3
Q95.4	Individuen mit Marker-Heterochromatin	3, 4	3
Q95.5	Individuen mit autosomaler Bruchstelle	3, 4	3
Q95.8	Sonstige balancierte Chromosomen-Rearrangements und Struktur-Marker	3, 4	3
Q96.0	Karyotyp 45,X	3, 4	3
Q96.1	Karyotyp 46,X iso (Xq)	3, 4	3
Q96.2	Karyotyp 46,X mit Gonosomenanomalie, ausgenommen iso (Xq)	3, 4	3
Q96.3	Mosaik, 45,X/46,XX oder 45,X/46,XY	3, 4	3
Q96.4	Mosaik, 45,X/sonstige Zelllinie(n) mit Gonosomenanomalie	3, 4	3
Q96.8	Sonstige Varianten des Turner-Syndroms	3, 4	3
Q97.0	Karyotyp 47,XXX	3, 4	3
Q97.1	Weiblicher Phänotyp mit mehr als drei X-Chromosomen	3, 4	3
Q97.2	Mosaik, Zelllinien mit unterschiedlicher Anzahl von X-Chromosomen	3, 4	3
Q97.3	Weiblicher Phänotyp mit Karyotyp 46,XY	3, 4	3
Q97.8	Sonstige näher bezeichnete Anomalien der Gonosomen bei weiblichem Phänotyp	3, 4	3
Q98.0	Klinefelter-Syndrom, Karyotyp 47,XXY	3, 4	3
Q98.1	Klinefelter-Syndrom, männlicher Phänotyp mit mehr als zwei X-Chromosomen	3, 4	3
Q98.2	Klinefelter-Syndrom, männlicher Phänotyp mit Karyotyp 46,XX	3, 4	3
Q98.3	Sonstiger männlicher Phänotyp mit Karyotyp 46,XX	3, 4	3
Q98.5	Karyotyp 47,XYY	3, 4	3
Q98.6	Männlicher Phänotyp mit Strukturanomalie der Gonosomen	3, 4	3
Q98.7	Männlicher Phänotyp mit Gonosomen-Mosaik	3, 4	3
Q98.8	Sonstige näher bezeichnete Anomalien der Gonosomen bei männlichem Phänotyp	3, 4	3
Q99.0	Chimäre 46,XX/46,XY	3, 4	3
Q99.1	Hermaphroditismus verus mit Karyotyp 46,XX	3, 4	3
Q99.2	Fragiles X-Chromosom	3, 4	3
Q99.8	Sonstige näher bezeichnete Chromosomenanomalien	3, 4	3
R04.2	Hämoptoe	1, 2	1, 2
R04.8	Blutung aus sonstigen Lokalisationen in den Atemwegen	1, 2	1, 2
R09.2	Atemstillstand	3, 4	1, 3
R13.0	Dysphagie mit Beaufsichtigungspflicht während der Nahrungsaufnahme	1	1

ICD	Beschreibung	OP CCL	Med. CCL
R13.1	Dysphagie bei absaugpflichtigem Tracheostoma mit (teilweise) geblockter Trachealkanüle	1	1
R15	Stuhlinkontinenz	1	1
R18	Aszites	1, 2	2
R29.0	Tetanie	2, 3, 4	2, 3
R47.0	Dysphasie und Aphasie	1	1
R47.1	Dysarthrie und Anarthrie	1, 2	2
R56.0	Fieberkrämpfe	1, 2	1, 2
R57.0	Kardiogener Schock	3, 4	3
R57.1	Hypovolämischer Schock	3, 4	2, 3
R57.2	Septischer Schock	3, 4	2, 3
R64	Kachexie	2	2
R82.0	Chylurie	2, 3	2, 3
R82.1	Myoglobinurie	2, 3	2, 3
S02.0	Schädeldachfraktur	2, 3	2
S02.1	Schädelbasisfraktur	2, 3	2
S02.3	Fraktur des Orbitabodens	1, 2, 3, 4	1, 2
S02.4	Fraktur des Jochbeins und des Oberkiefers	2, 3	2, 3
S02.61	Unterkieferfraktur: Processus condylaris	2, 3	2, 3
S02.62	Unterkieferfraktur: Subkondylär	2, 3	2, 3
S02.63	Unterkieferfraktur: Processus coronoideus	2, 3	2, 3
S02.64	Unterkieferfraktur: Ramus mandibulae, nicht näher bezeichnet	2, 3	2, 3
S02.65	Unterkieferfraktur: Angulus mandibulae	2, 3	2, 3
S02.66	Unterkieferfraktur: Symphysis mandibulae	2, 3	2, 3
S02.67	Unterkieferfraktur: Pars alveolaris	2, 3	2, 3
S02.68	Unterkieferfraktur: Corpus mandibulae, sonstige und nicht näher bezeichnete Teile	2, 3	2, 3
S02.69	Unterkieferfraktur: Mehrere Teile	2, 3	2, 3
S02.7	Multiple Frakturen der Schädel- und Gesichtsschädelknochen	2, 3	2
S02.8	Frakturen sonstiger Schädel- und Gesichtsschädelknochen	2, 3	2
S05.2	Rissverletzung und Ruptur des Auges mit Prolaps oder Verlust intraokularen Gewebes	1, 2, 3, 4	1, 2
S05.3	Rissverletzung des Auges ohne Prolaps oder Verlust intraokularen Gewebes	1, 2, 3, 4	1, 2
S05.4	Penetrierende Wunde der Orbita mit oder ohne Fremdkörper	1, 2, 3, 4	1, 2
S05.5	Penetrierende Wunde des Augapfels mit Fremdkörper	1	1
S05.6	Penetrierende Wunde des Augapfels ohne Fremdkörper	1	1
S05.7	Abriss des Augapfels	1, 2, 3, 4	1, 2
S05.8	Sonstige Verletzungen des Auges und der Orbita	1, 2, 3, 4	1, 2
S06.1	Traumatisches Hirnödem	2, 3, 4	2
S06.21	Diffuse Hirnkontusionen	2, 3, 4	2
S06.22	Diffuse Kleinhirnkontusionen	2, 3, 4	2
S06.23	Multiple intrazerebrale und zerebellare Hämatome	2, 3, 4	2
S06.28	Sonstige diffuse Hirn- und Kleinhirnverletzungen	2, 3, 4	2
S06.31	Umschriebene Hirnkontusion	2, 3, 4	2
S06.32	Umschriebene Kleinhirnkontusion	2, 3, 4	2
S06.33	Umschriebenes zerebrales Hämatom	2, 3, 4	2
S06.34	Umschriebenes zerebellares Hämatom	2, 3, 4	2
S06.38	Sonstige umschriebene Hirn- und Kleinhirnverletzungen	2, 3, 4	2
S06.4	Epidurale Blutung	2, 3, 4	2
S06.5	Traumatische subdurale Blutung	2, 3, 4	2
S06.6	Traumatische subarachnoidale Blutung	2, 3, 4	2
S06.70	Bewusstlosigkeit bei Schädel-Hirn-Trauma: Weniger als 30 Minuten	1, 2	1, 2
S06.71	Bewusstlosigkeit bei Schädel-Hirn-Trauma: 30 Minuten bis 24 Stunden	2, 3, 4	2
S06.72	Bewusstlosigkeit bei Schädel-Hirn-Trauma: Mehr als 24 Stunden, mit Rückkehr zum vorher bestehenden Bewusstseinsgrad	2, 3, 4	2
S06.73	Bewusstlosigkeit bei Schädel-Hirn-Trauma: Mehr als 24 Stunden, ohne Rückkehr zum vorher bestehenden Bewusstseinsgrad	2, 3, 4	2
S06.8	Sonstige intrakranielle Verletzungen	2, 3, 4	2
S07.0	Zerquetschung des Gesichtes	2, 3	2
S07.1	Zerquetschung des Schädels	2, 3	2
S07.8	Zerquetschung sonstiger Teile des Kopfes	2, 3	2
S08.8	Traumatische Amputation sonstiger Teile des Kopfes	2, 3	2
S09.0	Verletzung von Blutgefäßen des Kopfes, anderenorts nicht klassifiziert	2, 3	2
S11.01	Offene Wunde: Kehlkopf	2	2
S11.02	Offene Wunde: Trachea, Pars cervicalis	2, 3, 4	2
S12.0	Fraktur des 1. Halswirbels	2, 3	2
S12.1	Fraktur des 2. Halswirbels	2, 3	2
S12.21	Fraktur des 3. Halswirbels	2, 3	2
S12.22	Fraktur des 4. Halswirbels	2, 3	2
S12.23	Fraktur des 5. Halswirbels	2, 3	2
S12.24	Fraktur des 6. Halswirbels	2, 3	2
S12.25	Fraktur des 7. Halswirbels	2, 3	2
S12.7	Multiple Frakturen der Halswirbelsäule	2, 3	2
S12.8	Fraktur sonstiger Teile im Bereich des Halses	2	2
S13.0	Traumatische Ruptur einer zervikalen Bandscheibe	2, 3	2
S13.11	Luxation von Halswirbeln: C1/C2	2, 3	2
S13.12	Luxation von Halswirbeln: C2/C3	2, 3	2
S13.13	Luxation von Halswirbeln: C3/C4	2, 3	2
S13.14	Luxation von Halswirbeln: C4/C5	2, 3	2
S13.15	Luxation von Halswirbeln: C5/C6	2, 3	2
S13.16	Luxation von Halswirbeln: C6/C7	2, 3	2
S13.17	Luxation von Halswirbeln: C7/T1	2, 3	2
S13.18	Luxation von Halswirbeln: Sonstige	2, 3	2

ICD	Beschreibung	OP CCL	Med. CCL
S13.3	Multiple Luxationen im Bereich des Halses	2, 3	2
S14.0	Kontusion und Ödem des zervikalen Rückenmarkes	2, 4	2, 3
S14.11	Komplette Querschnittverletzung des zervikalen Rückenmarkes	2, 4	2, 3
S14.12	Zentrale Halsmarkverletzung (inkomplette Querschnittverletzung)	2, 4	2, 3
S14.13	Sonstige inkomplette Querschnittverletzungen des zervikalen Rückenmarkes	2, 4	2, 3
S14.2	Verletzung von Nervenwurzeln der Halswirbelsäule	2	2
S14.3	Verletzung des Plexus brachialis	2	2
S14.71	Verletzung des Rückenmarkes: C1	2, 4	2, 3
S14.72	Verletzung des Rückenmarkes: C2	2, 4	2, 3
S14.73	Verletzung des Rückenmarkes: C3	2, 4	2, 3
S14.74	Verletzung des Rückenmarkes: C4	2, 4	2, 3
S14.75	Verletzung des Rückenmarkes: C5	2, 4	2, 3
S14.76	Verletzung des Rückenmarkes: C6	2, 4	2, 3
S14.77	Verletzung des Rückenmarkes: C7	2, 4	2, 3
S14.78	Verletzung des Rückenmarkes: C8	2, 4	2, 3
S15.01	Verletzung: A. carotis communis	2, 3	2
S15.02	Verletzung: A. carotis externa	2, 3	2
S15.03	Verletzung: A. carotis interna	2, 3	2
S15.1	Verletzung der A. vertebralis	2, 3	2
S15.2	Verletzung der V. jugularis externa	2, 3	2
S15.3	Verletzung der V. jugularis interna	2, 3	2
S15.7	Verletzung mehrerer Blutgefäße in Höhe des Halses	2, 3	2
S15.88	Verletzung sonstiger Blutgefäße in Höhe des Halses	2, 3	2
S17.0	Zerquetschung des Kehlkopfes und der Trachea	2, 3	2
S17.8	Zerquetschung sonstiger Teile des Halses	2, 3	2
S22.01	Fraktur eines Brustwirbels: T1 und T2	2, 3	2
S22.02	Fraktur eines Brustwirbels: T3 und T4	2, 3	2
S22.03	Fraktur eines Brustwirbels: T5 und T6	2, 3	2
S22.04	Fraktur eines Brustwirbels: T7 und T8	2, 3	2
S22.05	Fraktur eines Brustwirbels: T9 und T10	2, 3	2
S22.06	Fraktur eines Brustwirbels: T11 und T12	2, 3	2
S22.1	Multiple Frakturen der Brustwirbelsäule	2, 3	2
S22.20	Fraktur des Sternums: Nicht näher bezeichnet	2, 3, 4	2
S22.21	Fraktur des Sternums: Manubrium sterni	2, 3, 4	2
S22.22	Fraktur des Sternums: Corpus sterni	2, 3, 4	2
S22.23	Fraktur des Sternums: Processus xiphoideus	2, 3, 4	2
S22.41	Rippenserienfraktur: Mit Beteiligung der ersten Rippe	2, 3, 4	2
S22.42	Rippenserienfraktur: Mit Beteiligung von zwei Rippen	2, 3, 4	2
S22.43	Rippenserienfraktur: Mit Beteiligung von drei Rippen	2, 3, 4	2
S22.44	Rippenserienfraktur: Mit Beteiligung von vier und mehr Rippen	2, 3, 4	2
S22.5	Instabiler Thorax	2, 3, 4	2
S24.0	Kontusion und Ödem des thorakalen Rückenmarkes	2, 4	2, 3
S24.11	Komplette Querschnittverletzung des thorakalen Rückenmarkes	2, 4	2, 3
S24.12	Inkomplette Querschnittverletzung des thorakalen Rückenmarkes	2, 4	2, 3
S24.2	Verletzung von Nervenwurzeln der Brustwirbelsäule	2	2
S24.71	Verletzung des Rückenmarkes: T1	2, 4	2, 3
S24.72	Verletzung des Rückenmarkes: T2/T3	2, 4	2, 3
S24.73	Verletzung des Rückenmarkes: T4/T5	2, 4	2, 3
S24.74	Verletzung des Rückenmarkes: T6/T7	2, 4	2, 3
S24.75	Verletzung des Rückenmarkes: T8/T9	2, 4	2, 3
S24.76	Verletzung des Rückenmarkes: T10/T11	2, 4	2, 3
S24.77	Verletzung des Rückenmarkes: T12	2, 4	2, 3
S25.0	Verletzung der Aorta thoracica	2, 3	2
S25.1	Verletzung des Truncus brachiocephalicus oder der A. subclavia	2, 3	2
S25.2	Verletzung der V. cava superior	2, 3	2
S25.3	Verletzung der V. brachiocephalica oder der V. subclavia	2, 3	2
S25.4	Verletzung von Pulmonalgefäßen	2, 3	2
S25.7	Verletzung mehrerer Blutgefäße des Thorax	2, 3	2
S26.0	Traumatisches Hämoperikard	1, 2, 3	1, 2
S26.81	Prellung des Herzens	1, 2, 3	1, 2
S26.82	Rissverletzung des Herzens ohne Eröffnung einer Herzhöhle	1, 2, 3	1, 2
S26.83	Rissverletzung des Herzens mit Eröffnung einer Herzhöhle	1, 2, 3	1, 2
S27.0	Traumatischer Pneumothorax	2, 3, 4	2, 3
S27.1	Traumatischer Hämatothorax	2, 3, 4	2, 3
S27.2	Traumatischer Hämatopneumothorax	2, 3, 4	2, 3
S27.32	Rissverletzung der Lunge	2, 3, 4	2
S27.4	Verletzung eines Bronchus	2, 3, 4	2
S27.5	Verletzung der Trachea, Pars thoracica	2, 3	1, 2
S27.6	Verletzung der Pleura	2, 3	1, 2
S27.82	Verletzung: Ductus thoracicus	2, 3	1, 2
S27.83	Verletzung: Ösophagus, Pars thoracica	2, 4	2, 3
S27.84	Verletzung: Thymus	2, 3	1, 2
S28.0	Brustkorbzerquetschung	2, 3	2
S28.1	Traumatische Amputation eines Teiles des Thorax	2, 3	2
S32.01	Fraktur eines Lendenwirbels: L1	2, 3	2
S32.02	Fraktur eines Lendenwirbels: L2	2, 3	2

ICD	Beschreibung	OP CCL	Med. CCL
S32.03	Fraktur eines Lendenwirbels: L3	2, 3	2
S32.04	Fraktur eines Lendenwirbels: L4	2, 3	2
S32.05	Fraktur eines Lendenwirbels: L5	2, 3	2
S32.1	Fraktur des Os sacrum	2, 3	2
S32.2	Fraktur des Os coccygis	2, 3	2
S32.4	Fraktur des Acetabulums	3, 4	2, 3
S32.5	Fraktur des Os pubis	3, 4	2, 3
S32.7	Multiple Frakturen mit Beteiligung der Lendenwirbelsäule und des Beckens	3, 4	2, 3
S32.89	Fraktur: Sonstige und nicht näher bezeichnete Teile des Beckens	3, 4	2, 3
S34.0	Kontusion und Ödem des lumbalen Rückenmarkes [Conus medullaris]	2, 4	2, 3
S34.10	Komplette Querschnittverletzung des lumbalen Rückenmarkes	2, 4	2, 3
S34.11	Inkomplette Querschnittverletzung des lumbalen Rückenmarkes	2, 4	2, 3
S34.18	Sonstige Verletzung des lumbalen Rückenmarkes	2, 4	2, 3
S34.2	Verletzung von Nervenwurzeln der Lendenwirbelsäule und des Kreuzbeins	2	2
S34.30	Komplettes traumatisches Cauda- (equina-) Syndrom	2, 4	2, 3
S34.31	Inkomplettes traumatisches Cauda- (equina-) Syndrom	2, 4	2, 3
S34.4	Verletzung des Plexus lumbosacralis	2	2
S34.71	Verletzung des Rückenmarkes: L1	2, 4	2, 3
S34.72	Verletzung des Rückenmarkes: L2	2, 4	2, 3
S34.73	Verletzung des Rückenmarkes: L3	2, 4	2, 3
S34.74	Verletzung des Rückenmarkes: L4	2, 4	2, 3
S34.75	Verletzung des Rückenmarkes: L5	2, 4	2, 3
S34.76	Verletzung des Rückenmarkes: S1	2, 4	2, 3
S34.77	Verletzung des Rückenmarkes: S2-S5	2, 4	2, 3
S35.0	Verletzung der Aorta abdominalis	2, 3	2
S35.1	Verletzung der V. cava inferior	2, 3	2
S35.2	Verletzung des Truncus coeliacus oder der A. mesenterica	2, 3	2
S35.3	Verletzung der V. portae oder der V. lienalis	2, 3	2
S35.4	Verletzung von Blutgefäßen der Niere	2, 3	2
S35.5	Verletzung von Blutgefäßen der Iliakalregion	2, 3	2
S35.7	Verletzung mehrerer Blutgefäße in Höhe des Abdomens, der Lumbosakralgegend und des Beckens	2, 3	2
S36.01	Hämatom der Milz	2, 3, 4	1, 2, 3
S36.02	Kapselriss der Milz, ohne größeren Einriss des Parenchyms	2, 3, 4	1, 2, 3
S36.03	Rissverletzung der Milz mit Beteiligung des Parenchyms	2, 3, 4	1, 2, 3
S36.04	Massive Parenchymruptur der Milz	2, 3, 4	1, 2, 3
S36.08	Sonstige Verletzungen der Milz	2, 3, 4	1, 2, 3
S36.11	Prellung und Hämatom der Leber	1, 2, 3	1, 2, 3
S36.13	Leichte Rissverletzung der Leber	1, 2, 3	1, 2, 3
S36.14	Mittelschwere Rissverletzung der Leber	1, 2, 3	1, 2, 3
S36.15	Schwere Rissverletzung der Leber	1, 2, 3	1, 2, 3
S36.16	Sonstige Verletzungen der Leber	1, 2, 3	1, 2, 3
S36.17	Verletzung: Gallenblase	2, 3, 4	2, 3
S36.18	Verletzung: Gallengang	2, 3, 4	2, 3
S36.81	Verletzung: Peritoneum	2, 4	2, 3
S36.83	Verletzung: Retroperitoneum	2, 3, 4	2, 3
S36.88	Verletzung: Sonstige intraabdominale Organe	2, 3	2
S37.01	Prellung und Hämatom der Niere	2, 3, 4	1, 2
S37.02	Rissverletzung der Niere	2, 3	2
S37.03	Komplette Ruptur des Nierenparenchyms	2, 3	2
S37.1	Verletzung des Harnleiters	2, 3	2
S37.21	Prellung der Harnblase	2, 3, 4	2, 3
S37.22	Ruptur der Harnblase	2, 3	2
S37.28	Sonstige Verletzungen der Harnblase	2, 3	2
S37.31	Verletzung der Harnröhre: Pars membranacea	1	1
S37.32	Verletzung der Harnröhre: Pars spongiosa	1	1
S37.33	Verletzung der Harnröhre: Pars prostatica	1	1
S37.38	Verletzung der Harnröhre: Sonstige Teile	1	1
S37.4	Verletzung des Ovars	2, 3	2
S37.5	Verletzung der Tuba uterina	2, 3	2
S37.6	Verletzung des Uterus	2, 3	2
S37.7	Verletzung mehrerer Harnorgane und Beckenorgane	2, 3	2
S37.81	Verletzung: Nebenniere	2, 3	2
S37.82	Verletzung: Prostata	2, 3	2
S37.83	Verletzung: Bläschendrüse [Vesicula seminalis]	2, 3	2
S37.84	Verletzung: Samenleiter	2, 3	2
S39.6	Verletzung eines oder mehrerer intraabdominaler Organe mit Beteiligung eines oder mehrerer Beckenorgane	1, 2	1
S39.7	Multiple Verletzungen des Abdomens, der Lumbosakralgegend und des Beckens	2, 3	2
S42.22	Fraktur des proximalen Endes des Humerus: Collum chirurgicum	2, 3	2
S42.23	Fraktur des proximalen Endes des Humerus: Collum anatomicum	2, 3	2
S48.0	Traumatische Amputation im Schultergelenk	2, 3	2
S48.1	Traumatische Amputation zwischen Schulter und Ellenbogen	2, 3	2
S58.0	Traumatische Amputation im Ellenbogengelenk	2, 3	2
S58.1	Traumatische Amputation zwischen Ellenbogen und Handgelenk	2, 3	2

ICD	Beschreibung	OP CCL	Med. CCL
S68.3	Kombinierte traumatische Amputation (von Teilen) eines oder mehrerer Finger mit anderen Teilen des Handgelenkes und der Hand	2, 3	2
S68.4	Traumatische Amputation der Hand in Höhe des Handgelenkes	2, 3	2
S68.8	Traumatische Amputation sonstiger Teile des Handgelenkes und der Hand	2, 3	2
S72.01	Schenkelhalsfraktur: Intrakapsulär	3, 4	2, 3
S72.02	Schenkelhalsfraktur: (Proximale) Epiphyse, Epiphysenlösung	3, 4	2, 3
S72.03	Schenkelhalsfraktur: Subkapital	3, 4	2, 3
S72.04	Schenkelhalsfraktur: Mediozervikal	3, 4	2, 3
S72.05	Schenkelhalsfraktur: Basis	3, 4	2, 3
S72.08	Schenkelhalsfraktur: Sonstige Teile	3, 4	2, 3
S72.11	Femurfraktur: Intertrochantär	3, 4	2, 3
S72.2	Subtrochantäre Fraktur	3, 4	2, 3
S72.3	Fraktur des Femurschaftes	2, 3, 4	2, 3
S72.41	Distale Fraktur des Femurs: Condylus (lateralis) (medialis)	2, 3, 4	2, 3
S72.42	Distale Fraktur des Femurs: Epiphyse, Epiphysenlösung	2, 3, 4	2, 3
S72.43	Distale Fraktur des Femurs: Suprakondylär	2, 3, 4	2, 3
S72.44	Distale Fraktur des Femurs: Interkondylär	2, 3, 4	2, 3
S72.7	Multiple Frakturen des Femurs	2, 3, 4	2, 3
S72.8	Frakturen sonstiger Teile des Femurs	2, 3, 4	2, 3
S75.0	Verletzung der A. femoralis	2, 3	2
S78.0	Traumatische Amputation im Hüftgelenk	2, 3	2
S78.1	Traumatische Amputation zwischen Hüfte und Knie	2, 3	2
S88.0	Traumatische Amputation im Kniegelenk	2, 3	2
S88.1	Traumatische Amputation zwischen Knie und oberem Sprunggelenk	2, 3	2
S98.0	Traumatische Amputation des Fußes in Höhe des oberen Sprunggelenkes	2, 3	2
S98.3	Traumatische Amputation sonstiger Teile des Fußes	2, 3	2
T04.0	Zerquetschungen mit Beteiligung von Kopf und Hals	2, 3	2
T04.4	Zerquetschungen mit Beteiligung mehrerer Regionen der oberen Extremität(en) und mehrerer Regionen der unteren Extremität(en)	2, 3	2
T04.7	Zerquetschungen mit Beteiligung von Thorax, Abdomen und Extremität(en), von Thorax, Lumbosakralgegend und Extremität(en) oder von Thorax, Becken und Extremität(en)	2, 3	2
T04.8	Zerquetschungen mit Beteiligung sonstiger Kombinationen von Körperregionen	2, 3	2
T05.0	Traumatische Amputation beider Hände	2, 3	2
T05.1	Traumatische Amputation einer Hand und des anderen Armes [jede Höhe, ausgenommen Hand]	2, 3	2
T05.2	Traumatische Amputation beider Arme [jede Höhe]	2, 3	2
T05.3	Traumatische Amputation beider Füße	2, 3	2
T05.4	Traumatische Amputation eines Fußes und des anderen Beines [jede Höhe, ausgenommen Fuß]	2, 3	2
T05.5	Traumatische Amputation beider Beine [jede Höhe]	2, 3	2
T05.6	Traumatische Amputation der Arme und Beine, in jeder Kombination [jede Höhe]	2, 3	2
T06.0	Verletzungen des Gehirns und der Hirnnerven kombiniert mit Verletzungen von Nerven und Rückenmark in Halshöhe	2, 4	2, 3
T06.1	Verletzungen der Nerven und des Rückenmarkes mit Beteiligung mehrerer sonstiger Körperregionen	2, 4	2, 3
T06.5	Verletzungen mit Beteiligung von intrathorakalen Organen und intraabdominalen Organen oder intrathorakalen Organen und Beckenorganen	2, 3	2
T27.1	Verbrennung des Kehlkopfes und der Trachea mit Beteiligung der Lunge	3, 4	3
T27.5	Verätzung des Kehlkopfes und der Trachea mit Beteiligung der Lunge	3, 4	3
T70.3	Caissonkrankheit [Dekompressionskrankheit]	3, 4	2, 3
T79.0	Luftembolie (traumatisch)	3, 4	2, 3
T79.1	Fettembolie (traumatisch)	3, 4	2, 3
T79.2	Traumatisch bedingte sekundäre oder rezidivierende Blutung	2, 4	1, 2
T79.4	Traumatischer Schock	2, 4	1, 2
T79.5	Traumatische Anurie	3, 4	2, 3
T79.60	Traumatische Muskelischämie der oberen Extremität	2	2
T79.61	Traumatische Muskelischämie des Oberschenkels und der Hüfte	2	2
T79.62	Traumatische Muskelischämie des Unterschenkels	2	2
T79.63	Traumatische Muskelischämie des Fußes	2	2
T79.68	Traumatische Muskelischämie sonstiger Lokalisation	2	2
T79.7	Traumatisches subkutanes Emphysem	2, 3, 4	2, 3
T80.0	Luftembolie nach Infusion, Transfusion oder Injektion zu therapeutischen Zwecken	1	1
T80.3	AB0-Unverträglichkeitsreaktion	2	2
T80.4	Rh-Unverträglichkeitsreaktion	2	2
T80.5	Anaphylaktischer Schock durch Serum	2	2
T80.6	Sonstige Serumreaktionen	2	2
T81.0	Blutung und Hämatom als Komplikation eines Eingriffes, anderenorts nicht klassifiziert	1	1
T81.1	Schock während oder als Folge eines Eingriffes, anderenorts nicht klassifiziert	2, 3, 4	2, 3

ICD	Beschreibung	OP CCL	Med. CCL
T82.0	Mechanische Komplikation durch eine Herzklappenprothese	2, 3	2, 3
T82.1	Mechanische Komplikation durch ein kardiales elektronisches Gerät	2, 3	2, 3
T82.2	Mechanische Komplikation durch Koronararterien-Bypass und Klappentransplantate	1, 2, 3	1, 2
T82.3	Mechanische Komplikation durch sonstige Gefäßtransplantate	1, 2, 3	1, 2
T82.4	Mechanische Komplikation durch Gefäßkatheter bei Dialyse	2, 3, 4	3
T82.5	Mechanische Komplikation durch sonstige Geräte und Implantate im Herzen und in den Gefäßen	1, 2, 3	1, 2
T82.6	Infektion und entzündliche Reaktion durch eine Herzklappenprothese	2, 3, 4	3
T82.7	Infektion und entzündliche Reaktion durch sonstige Geräte, Implantate oder Transplantate im Herzen und in den Gefäßen	1, 2, 3	1, 2
T82.8	Sonstige näher bezeichnete Komplikationen durch Prothesen, Implantate oder Transplantate im Herzen und in den Gefäßen	1, 2, 3	1, 2
T83.2	Mechanische Komplikation durch ein Harnorgantransplantat	2, 3, 4	1, 2
T84.00	Mechanische Komplikation durch eine Gelenkendoprothese: Schultergelenk	2, 3, 4	1, 2, 3
T84.01	Mechanische Komplikation durch eine Gelenkendoprothese: Ellenbogengelenk	2, 3, 4	1, 2, 3
T84.02	Mechanische Komplikation durch eine Gelenkendoprothese: Radiuskopfgelenk	2, 3, 4	1, 2, 3
T84.03	Mechanische Komplikation durch eine Gelenkendoprothese: Handgelenk	2, 3, 4	1, 2, 3
T84.04	Mechanische Komplikation durch eine Gelenkendoprothese: Hüftgelenk	2, 3, 4	1, 2, 3
T84.05	Mechanische Komplikation durch eine Gelenkendoprothese: Kniegelenk	2, 3, 4	1, 2, 3
T84.06	Mechanische Komplikation durch eine Gelenkendoprothese: Sprunggelenk	2, 3, 4	1, 2, 3
T84.07	Mechanische Komplikation durch eine Gelenkendoprothese: Bandscheibe	2, 3, 4	1, 2, 3
T84.08	Mechanische Komplikation durch eine Gelenkendoprothese: Sonstige näher bezeichnete Gelenke	2, 3, 4	1, 2, 3
T84.10	Mechanische Komplikation durch eine interne Osteosynthesevorrichtung an Extremitätenknochen: Schulterregion	2, 3, 4	1, 2, 3
T84.11	Mechanische Komplikation durch eine interne Osteosynthesevorrichtung an Extremitätenknochen: Oberarm	2, 3, 4	1, 2, 3
T84.12	Mechanische Komplikation durch eine interne Osteosynthesevorrichtung an Extremitätenknochen: Unterarm	2, 3, 4	1, 2, 3
T84.13	Mechanische Komplikation durch eine interne Osteosynthesevorrichtung an Extremitätenknochen: Hand	2, 3, 4	1, 2, 3
T84.14	Mechanische Komplikation durch eine interne Osteosynthesevorrichtung an Extremitätenknochen: Beckenregion und Oberschenkel	2, 3, 4	1, 2, 3
T84.15	Mechanische Komplikation durch eine interne Osteosynthesevorrichtung an Extremitätenknochen: Unterschenkel	2, 3, 4	1, 2, 3
T84.16	Mechanische Komplikation durch eine interne Osteosynthesevorrichtung an Extremitätenknochen: Knöchel und Fuß	2, 3, 4	1, 2, 3
T84.18	Mechanische Komplikation durch eine interne Osteosynthesevorrichtung an Extremitätenknochen: Sonstige näher bezeichnete Extremitätenknochen	2, 3, 4	1, 2, 3
T84.20	Mechanische Komplikation durch eine interne Osteosynthesevorrichtung an sonstigen Knochen: Wirbelsäule	2, 3, 4	1, 2, 3
T84.28	Mechanische Komplikation durch eine interne Osteosynthesevorrichtung an sonstigen Knochen: Sonstige näher bezeichnete Knochen	2, 3, 4	1, 2, 3
T84.3	Mechanische Komplikation durch sonstige Knochengeräte, -implantate oder -transplantate	2, 3, 4	1, 2, 3
T84.4	Mechanische Komplikation durch sonstige intern verwendete orthopädische Geräte, Implantate und Transplantate	2, 3, 4	1, 2, 3
T84.5	Infektion und entzündliche Reaktion durch eine Gelenkendoprothese	1, 2, 3, 4	1, 2
T84.6	Infektion und entzündliche Reaktion durch eine interne Osteosynthesevorrichtung [jede Lokalisation]	1, 2, 3, 4	1, 2
T84.7	Infektion und entzündliche Reaktion durch sonstige orthopädische Endoprothesen, Implantate oder Transplantate	1, 2, 3, 4	1, 2
T85.0	Mechanische Komplikation durch einen ventrikulären, intrakraniellen Shunt	3, 4	3
T85.1	Mechanische Komplikation durch einen implantierten elektronischen Stimulator des Nervensystems	3, 4	3
T85.2	Mechanische Komplikation durch eine intraokulare Linse	1, 2, 3, 4	1, 2
T85.3	Mechanische Komplikation durch sonstige Augenprothesen, -implantate oder -transplantate	1, 2, 3, 4	1, 2

ICD	Beschreibung	OP CCL	Med. CCL
T85.4	Mechanische Komplikation durch Mammaprothese oder -implantat	1, 2	2
T85.50	Mechanische Komplikation durch Prothesen, Implantate oder Transplantate im Ösophagus	2, 3, 4	2, 3
T85.51	Mechanische Komplikation durch Prothesen, Implantate oder Transplantate im sonstigen oberen Gastrointestinaltrakt	2, 3, 4	2, 3
T85.52	Mechanische Komplikation durch Prothesen, Implantate oder Transplantate im unteren Gastrointestinaltrakt	2, 3, 4	2, 3
T85.53	Mechanische Komplikation durch Prothesen, Implantate oder Transplantate in den Gallenwegen	2, 3, 4	2, 3
T85.54	Mechanische Komplikation durch Prothesen, Implantate oder Transplantate im Pankreas	2, 3, 4	2, 3
T85.59	Mechanische Komplikation durch gastrointestinale Prothesen, Implantate oder Transplantate, Lokalisation nicht näher bezeichnet	2, 3, 4	2, 3
T85.71	Infektion und entzündliche Reaktion durch Katheter zur Peritonealdialyse	2, 3, 4	1, 2
T85.76	Infektion und entzündliche Reaktion durch sonstige interne Prothesen, Implantate oder Transplantate im sonstigen Gastrointestinaltrakt	2, 3, 4	2, 3
T85.81	Sonstige Komplikationen durch interne Prothesen, Implantate oder Transplantate im Nervensystem	1, 2	2
T86.00	Versagen eines Transplantates hämatopoetischer Stammzellen	3, 4	3
T86.01	Akute Graft-versus-Host-Krankheit, Grad I und II	3, 4	3
T86.02	Akute Graft-versus-Host-Krankheit, Grad III und IV	3, 4	3
T86.05	Chronische Graft-versus-Host-Krankheit, mild	3, 4	3
T86.06	Chronische Graft-versus-Host-Krankheit, moderat	3, 4	3
T86.07	Chronische Graft-versus-Host-Krankheit, schwer	3, 4	3
T86.10	Akute Funktionsverschlechterung eines Nierentransplantates	3, 4	3
T86.11	Chronische Funktionsverschlechterung eines Nierentransplantates	3, 4	3
T86.12	Verzögerte Aufnahme der Transplantatfunktion	3, 4	3
T86.2	Versagen und Abstoßung eines Herztransplantates	3, 4	3
T86.3	Versagen und Abstoßung eines Herz-Lungen-Transplantates	3, 4	3
T86.40	Akute Funktionsverschlechterung eines Lebertransplantates	3, 4	3
T86.41	Chronische Funktionsverschlechterung eines Lebertransplantates	3, 4	3
T86.50	Durchblutungsstörung eines Hauttransplantates	2, 3, 4	2, 3
T86.51	Nekrose eines Hauttransplantates	2, 3, 4	2, 3
T86.52	Verlust eines Hauttransplantates	2, 3, 4	2, 3
T86.81	Versagen und Abstoßung: Lungentransplantat	3, 4	3
T86.82	Versagen und Abstoßung: Pankreastransplantat	3, 4	3
T86.88	Versagen und Abstoßung: Sonstige transplantierte Organe und Gewebe	3, 4	3
T87.0	Komplikationen durch replantierte (Teile der) obere(n) Extremität	2, 3	2, 3
T87.1	Komplikationen durch replantierte (Teile der) untere(n) Extremität	2, 3	2, 3
T87.2	Komplikationen durch sonstigen replantierten Körperteil	2, 3	2, 3
T87.4	Infektion des Amputationsstumpfes	3, 4	3
T87.5	Nekrose des Amputationsstumpfes	3, 4	3
T88.0	Infektion nach Impfung [Immunisierung]	3, 4	3
T88.2	Schock durch Anästhesie	2, 4	1, 2
T88.3	Maligne Hyperthermie durch Anästhesie	2, 3, 4	2, 3
T88.6	Anaphylaktischer Schock als unerwünschte Nebenwirkung eines indikationsgerechten Arzneimittels oder einer indikationsgerechten Droge bei ordnungsgemäßer Verabreichung	2	2
T91.3	Folgen einer Verletzung des Rückenmarkes	2, 4	2, 3
U07.1	COVID-19, Virus nachgewiesen	1	1
U10.9	Multisystemisches Entzündungssyndrom in Verbindung mit COVID-19, nicht näher bezeichnet	2	2
U50.50	Sehr schwere motorische Funktionseinschränkung: Barthel-Index: 0-15 Punkte	1, 3, 4	1, 3
U50.51	Sehr schwere motorische Funktionseinschränkung: Motorischer FIM: 13-30 Punkte	1, 3, 4	1, 3
U51.20	Schwere kognitive Funktionseinschränkung: Erweiterter Barthel-Index: 0-15 Punkte	3	1, 3
U51.21	Schwere kognitive Funktionseinschränkung: Kognitiver FIM: 5-10 Punkte	3	1, 3
U51.22	Schwere kognitive Funktionseinschränkung: MMSE: 0-16 Punkte	3	1, 3
U60.1	Klinische Kategorien der HIV-Krankheit: Kategorie A	2, 3	2
U60.2	Klinische Kategorien der HIV-Krankheit: Kategorie B	3, 4	3
U60.3	Klinische Kategorien der HIV-Krankheit: Kategorie C	3, 4	3
U61.1	Anzahl der T-Helferzellen bei HIV-Krankheit: Kategorie 1	3, 4	3
U61.2	Anzahl der T-Helferzellen bei HIV-Krankheit: Kategorie 2	3, 4	3

ICD	Beschreibung	OP CCL	Med. CCL
U61.3	Anzahl der T-Helferzellen bei HIV-Krankheit: Kategorie 3	3, 4	3
U69.6	Sekundäre Schlüsselnummer zur Spezifizierung eines Hustens als chronisch idiopathisch und chronisch refraktär	2	2
U80.00	Staphylococcus aureus mit Resistenz gegen Oxacillin oder Methicillin [MRSA]	1, 2, 3	1, 2, 3
U80.01	Staphylococcus aureus mit Resistenz gegen Glykopeptid-Antibiotika, Chinolone, Streptogramine oder Oxazolidinone und ohne Resistenz gegen Oxacillin oder Methicillin	1, 2, 3	1, 2, 3
U80.10	Streptococcus pneumoniae mit Resistenz gegen Penicillin oder Oxacillin	1, 2, 3	1, 2, 3
U80.11	Streptococcus pneumoniae mit Resistenz gegen Makrolid-Antibiotika, Oxazolidinone oder Streptogramine und ohne Resistenz gegen Penicillin oder Oxacillin	1, 2, 3	1, 2, 3
U80.20	Enterococcus faecalis mit Resistenz gegen Glykopeptid-Antibiotika	1, 2, 3	1, 2, 3
U80.21	Enterococcus faecalis mit Resistenz gegen Oxazolidinone oder mit High-Level-Aminoglykosid-Resistenz und ohne Resistenz gegen Glykopeptid-Antibiotika	1, 2, 3	1, 2, 3
U80.30	Enterococcus faecium mit Resistenz gegen Glykopeptid-Antibiotika	1, 2, 3	1, 2, 3
U80.31	Enterococcus faecium mit Resistenz gegen Oxazolidinone oder Streptogramine oder mit High-Level-Aminoglykosid-Resistenz und ohne Resistenz gegen Glykopeptid-Antibiotika	1, 2, 3	1, 2, 3
U80.8	Sonstige grampositive Bakterien mit Multiresistenz gegen Antibiotika	2, 3	1, 2, 3
U81.00	Escherichia coli mit Multiresistenz 2MRGN NeoPäd	1, 2, 3	1, 2, 3
U81.01	Klebsiella pneumoniae mit Multiresistenz 2MRGN NeoPäd	1, 2, 3	1, 2, 3
U81.02	Klebsiella oxytoca mit Multiresistenz 2MRGN NeoPäd	1, 2, 3	1, 2, 3
U81.03	Sonstige Klebsiellen mit Multiresistenz 2MRGN NeoPäd	1, 2, 3	1, 2, 3
U81.04	Enterobacter-cloacae-Komplex mit Multiresistenz 2MRGN NeoPäd	1, 2, 3	1, 2, 3
U81.05	Citrobacter-freundii-Komplex mit Multiresistenz 2MRGN NeoPäd	1, 2, 3	1, 2, 3
U81.06	Serratia marcescens mit Multiresistenz 2MRGN NeoPäd	1, 2, 3	1, 2, 3
U81.07	Proteus mirabilis mit Multiresistenz 2MRGN NeoPäd	1, 2, 3	1, 2, 3
U81.08	Sonstige Enterobacterales mit Multiresistenz 2MRGN NeoPäd	1, 2, 3	1, 2, 3
U81.10	Pseudomonas aeruginosa mit Multiresistenz 2MRGN NeoPäd	1, 2, 3	1, 2, 3
U81.11	Acinetobacter-baumannii-Gruppe mit Multiresistenz 2MRGN NeoPäd	1, 2, 3	1, 2, 3
U81.20	Escherichia coli mit Multiresistenz 3MRGN	1, 2, 3	1, 2, 3
U81.21	Klebsiella pneumoniae mit Multiresistenz 3MRGN	1, 2, 3	1, 2, 3
U81.22	Klebsiella oxytoca mit Multiresistenz 3MRGN	1, 2, 3	1, 2, 3
U81.23	Sonstige Klebsiellen mit Multiresistenz 3MRGN	1, 2, 3	1, 2, 3
U81.24	Enterobacter-cloacae-Komplex mit Multiresistenz 3MRGN	1, 2, 3	1, 2, 3
U81.25	Citrobacter-freundii-Komplex mit Multiresistenz 3MRGN	1, 2, 3	1, 2, 3
U81.26	Serratia marcescens mit Multiresistenz 3MRGN	1, 2, 3	1, 2, 3
U81.27	Proteus mirabilis mit Multiresistenz 3MRGN	1, 2, 3	1, 2, 3
U81.28	Sonstige Enterobacterales mit Multiresistenz 3MRGN	1, 2, 3	1, 2, 3
U81.30	Pseudomonas aeruginosa mit Multiresistenz 3MRGN	1, 2, 3	1, 2, 3
U81.31	Acinetobacter-baumannii-Gruppe mit Multiresistenz 3MRGN	1, 2, 3	1, 2, 3
U81.40	Escherichia coli mit Multiresistenz 4MRGN	1, 2, 3	1, 2, 3
U81.41	Klebsiella pneumoniae mit Multiresistenz 4MRGN	1, 2, 3	1, 2, 3
U81.42	Klebsiella oxytoca mit Multiresistenz 4MRGN	1, 2, 3	1, 2, 3
U81.43	Sonstige Klebsiellen mit Multiresistenz 4MRGN	1, 2, 3	1, 2, 3
U81.44	Enterobacter-cloacae-Komplex mit Multiresistenz 4MRGN	1, 2, 3	1, 2, 3
U81.45	Citrobacter-freundii-Komplex mit Multiresistenz 4MRGN	1, 2, 3	1, 2, 3
U81.46	Serratia marcescens mit Multiresistenz 4MRGN	1, 2, 3	1, 2, 3
U81.47	Proteus mirabilis mit Multiresistenz 4MRGN	1, 2, 3	1, 2, 3
U81.48	Sonstige Enterobacterales mit Multiresistenz 4MRGN	1, 2, 3	1, 2, 3
U81.50	Pseudomonas aeruginosa mit Multiresistenz 4MRGN	1, 2, 3	1, 2, 3
U81.51	Acinetobacter-baumannii-Gruppe mit Multiresistenz 4MRGN	1, 2, 3	1, 2, 3
U81.6	Burkholderia, Stenotrophomonas und andere Nonfermenter mit Resistenz gegen Chinolone, Amikacin, Ceftazidim, Piperacillin/Tazobactam oder Cotrimoxazol	1, 2, 3	1, 2, 3
U81.8	Sonstige gramnegative Bakterien mit Multiresistenz gegen Antibiotika	2, 3	1, 2, 3
U82.0	Mycobacterium tuberculosis mit Resistenz gegen ein oder mehrere Erstrangmedikamente	2, 3	1, 2, 3
U82.1	Multi-Drug Resistant Tuberculosis [MDR-TB]	2, 3	1, 2, 3
U82.2	Atypische Mykobakterien oder Nocardia mit Resistenz gegen ein oder mehrere Erstrangmedikamente	2, 3	1, 2, 3
U83	Candida mit Resistenz gegen Fluconazol oder Voriconazol	1, 2, 3, 4	1, 2, 3

ICD	Beschreibung	OP CCL	Med. CCL
U84	Herpesviren mit Resistenz gegen Virustatika	2, 3	1, 2, 3
U85	Humanes Immundefizienz-Virus mit Resistenz gegen Virustatika oder Proteinaseinhibitoren	3, 4	3
Z22.7	Latente Tuberkulose	3, 4	3
Z93.0	Vorhandensein eines Tracheostomas	2, 3	1, 2
Z94.0	Zustand nach Nierentransplantation	3	2
Z94.1	Zustand nach Herztransplantation	3	2
Z94.2	Zustand nach Lungentransplantation	3	2
Z94.3	Zustand nach Herz-Lungen-Transplantation	3	2
Z94.4	Zustand nach Lebertransplantation	3	2
Z94.81	Zustand nach hämatopoetischer Stammzelltransplantation mit gegenwärtiger Immunsuppression	3	2

Anhang E

E Plausibilitäten

E.1 Einleitung

Vor der MDC-Zuordnung überprüft der Grouper anhand von demografischen und klinischen Merkmalen die Gültigkeit verschiedener in einem Datensatz enthaltener Variablen. Im Zuge dieser Überprüfung werden Warnkennzeichen („Flags“) generiert, wenn das Programm auf ungültige Informationen oder Inkonsistenzen stösst. Weiter wird ein unumgehbarer Fehler („fatal Flag“) angezeigt, wenn aufgrund eines Problems (z.B. aufgrund einer ungültigen Altersangabe) keine MDC/DRG zugewiesen werden kann. Datensätze mit einem unumgehbaren Fehler werden einer der drei DRGs 960Z, 961Z oder 963Z zugeordnet (eine nähere Erläuterung zu Fehler-/sonstigen DRGs ist in Abschnitt 4.10 in Band 1 enthalten).

E.2 Demografische Merkmale

Tabelle E.1 Datenelemente und zulässige Werte für demografische Merkmale

Variable	Zulässige Werte	Anmerkungen
Alter	Zwei gültige Bereiche: • 1 bis 364/5 Tage (je nachdem ob Schaltjahr), wobei „Alter in Jahren“ Null oder nicht eingegeben ist; • 1 bis 124 Jahre, wobei „Alter in Tagen“ Null oder nicht eingegeben ist	Wenn das Alter anhand des Aufnahme- und Geburtsdatums berechnet werden kann, hat das berechnete Alter Vorrang vor dem eingegebenen Alter. Für diese Variable gibt es keine Standardeinstellung: Wenn weder ein Alter eingegeben wurde noch berechnet werden kann, wird diese Behandlungsepisode der DRG 960Z *Nicht gruppierbar* zugeordnet.
Geschlecht	1 - m oder M: männlich 2 - w oder W: weiblich 3 - i oder I: unbestimmt 9 - u oder U: unbekannt	Für diese Variable gibt es keine Standardeinstellung.
Aufnahmegewicht (in Gramm)	Gültiger Bereich: 125 bis 19999	Dieses Feld wird überprüft, wenn der Patient weniger als 1 Jahr alt ist. Wenn dieses Feld leer oder Null ist, wird der Standardwert 2500 Gramm verwendet.
Verweildauer (in Tagen)	Gültiger Bereich: 1 bis 9999	Dieser Wert wird anhand des Aufnahme- und Entlassungsdatums und unter Berücksichtigung aller Urlaubstage berechnet. Sind Aufnahme- und Entlassungsdatum identisch, wird als Verweildauer 1 Tag berechnet. In Fällen, in denen die Verweildauer berechnet werden kann, dafür jedoch ein separater gültiger Wert eingegeben wurde, verwendet der Grouper den niedrigeren Wert. Für diese Variable gibt es keine Standardeinstellung.

Variable	Zulässige Werte	Anmerkungen
Status der Verweildauer ein Belegungstag	0 Mehr als ein Belegungstag 1 Ein Belegungstag	Der Grouper berechnet diesen Status anhand des Aufnahme- und Entlassungsdatums – vorausgesetzt, dass es sich um gültige Daten handelt. Wenn sowohl der eingegebene Wert als auch der berechnete Wert ein gültiger Wert ist, verwendet der Grouper den berechneten Wert (d.h. Status der Verweildauer ein Belegungstag). Wenn nur einer dieser Werte ein gültiger Wert ist, verwendet der Grouper diesen. Wenn sowohl der eingegebene als auch der berechnete Wert ungültig ist, jedoch der Status der Verweildauer ein Belegungstag zur Gruppierung erforderlich ist, so wird die Behandlungsepisode der DRG 960Z *Nicht gruppierbar* zugeordnet. Für diese Variable gibt es keine Standard-einstellung.
Aufnahmeart	01 Normal 06 Zuverlegt (aus anderem Spital, mit Aufenthalt kürzer als 24 Std. im verlegenden Spital) 11 Zuverlegt (aus anderem Spital, mit Aufenthalt länger als 23 Std. im verlegenden Spital) 99 Unbekannt	Die Variable Aufnahmeart definiert die Behandlungsform bzw. den Grund dafür. Sie wird für das SwissDRG-System als zweistelliges (d. h. die Aufnahmeart 01 wird mit führender 0 geschrieben) numerisches Feld definiert. Die führende 0 ist mit anzugeben.
Urlaubstage	Gültiger Bereich: 0 bis 9999	
Dauer der maschinellen Beatmung (in Stunden)	Gültiger Bereich: 0 bis 9999	Der Standardwert für diese Variable ist „0“.
Entlassungsart	00 Nicht wegverlegt, nicht verstorben, nicht gegen ärztlichen Rat entlassen 04 Behandlung gegen ärztlichen Rat beendet 06 Wegverlegt (in anderes Spital) 07 Verstorben 99 Unbekannt	Mit dieser Variable wird der Entlassungsart (Entlassung/Verlegung/Tod) sowie ggf. der Ort angegeben, an den der Patient entlassen wird. Für diese Variable gibt es keine Standardeinstellung. Sie wird für das SwissDRG-System als zweistelliges (d. h. die Entlassarten 00 bis 07 werden mit führender 0 geschrieben) numerisches Feld definiert. Die führende 0 ist mit anzugeben.

E.3 Klinische Merkmale

Der Grouper überprüft die Gültigkeit aller Diagnose- und Prozedurenkodes nicht nur hinsichtlich der verwendeten Klassifikationen, sondern auch hinsichtlich des Alters und Geschlechts des Patienten. Kodes, die mehrmals vorkommen, werden ignoriert, wenn sie sich auf Diagnosen beziehen, nicht aber, wenn sie sich auf Prozeduren beziehen. Diagnosekodes, die sich auf die Morphologie von Neubildungen beziehen, werden vom Grouper nicht verwendet.

Tabelle E.2 Zulässige Werte für Diagnosen und Prozeduren

Variable	Zulässige Werte	Anmerkungen
Diagnosen (ICD-10-GM)	Gültiger, vollständig definierter Kode (tiefste Gliederungsebene) in der **ICD-10-GM Version** 2022	Doppelt vorkommende Diagnosen werden ignoriert.
Prozeduren (CHOP)	Gültiger, vollständig definierter Kode (tiefste Gliederungsebene) in der **CHOP Version** 2023	Doppelt vorkommende Prozeduren werden nicht ignoriert.

Ausserdem wird die Hauptdiagnose überprüft, um sicher zu stellen, dass es sich um eine zulässige Hauptdiagnose handelt und weder um einen Manifestationskode, d.h. einen Stern-Kode im Sinne der Kreuz-Stern-Systematik der ICD (siehe Tabelle E.3), noch um einen Kode zur Beschreibung einer externen Ursache für Verletzungen oder Vergiftungen (siehe Gruppen V, W, X und Y der ICD-10-GM) oder einen Ausrufezeichen-Kode.

Auch Kombinationen geburtshilflicher Diagnose- und Prozedurenkodes werden auf ihre Gültigkeit überprüft. Wenn in der Diagnose eine Schnittentbindung (Sectio caesarea), jedoch kein Prozedurenkode vermerkt wurde, so wird die Behandlungsepisode der DRG 962Z *Unzulässige Kodierung einer Sectio caesarea* zugeordnet.

Die klinischen Merkmale werden in vier Tabellen behandelt, die den Hauptteil dieses Anhanges einnehmen. Eine Beschreibung dazu ist in Tabelle E.3 enthalten.

Tabelle E.3 Tabellen zur Überprüfung klinischer Merkmale

Tabellen-nummer	Beschreibung	Anmerkungen
D.5	Unzulässige Hauptdiagnose	Einige Kodes sind zwar laut ICD-10-GM gültige Kodes, sind aber aufgrund des Algorithmus und der bestehenden Kodierrichtlinien nicht als Hauptdiagnose zulässig. Die Liste in Tabelle D.5 ist identisch mit der Liste für die DRG 961Z (siehe Prä-MDC-Abschnitt in Band 1).
D.6a-6k	Alterskonflikt	Dieses Flag wird gesetzt, wenn das Alter eines Patienten nicht mit dem Diagnose-/ Prozedurenkode vereinbar ist. Zu diesem Zweck stehen elf Alterskategorien zur Verfügung: a) „Säugling“ (Diagnosen, die hauptsächlich bei Neugeborenen gestellt werden, jedoch auch bei Patienten mit einem Alter zwischen 1 und 364/5 Tagen gültig sind); b) „Kleinkind“ (Diagnosen, die bei Patienten mit einem Alter zwischen 1 Tag und 2 Jahren gültig sind); c) „Kind“ (Diagnosen, die bei Patienten mit einem Alter zwischen 1 Tag und 10 Jahren gültig sind); d) „Kinder und Jugendliche“ (Diagnosen, die bei Patienten mit einem Alter zwischen 1 Tag und 19 Jahren gültig sind); e) „Post-neonatal" (Diagnosen, die bei Patienten, die älter als 27 Tage sind, gültig sind); f) „Älter als Säugling“ (Diagnosen, die bei Patienten mit einem Alter ab 1 Jahr gültig sind); g) „Pubertät“ (Diagnosen, die bei Patienten mit einem Alter zwischen 8 und 19 Jahren gültig sind); h) „Gebärfähiges Alter“ (Diagnosen, die bei Patientinnen mit einem Alter zwischen 12 und 55 Jahren gültig sind); i) „Gebärfähiges Alter“ (Prozeduren, die bei Patientinnen mit einem Alter zwischen 12 und 55 Jahren gültig sind); j) „Erwachsene“ (Diagnosen, die bei Patienten ab einem Alter von 15 Jahren gültig sind); k) „Reife Erwachsene“ (Diagnosen, die bei Patienten ab einem Alter von 30 Jahren gültig sind).

E.4 Warnkennzeichen und unumgehbare Fehler

D.4 Warnkennzeichen und unumgehbare Fehler

Wie bereits erwähnt, können im Zuge der Überprüfung demografischer und klinischer Merkmale sowohl Warnkennzeichen („Flags“) als auch Kennzeichen für unumgehbare Fehler („fatal Flags“) generiert werden. Grundsätzlich gilt Folgendes:

1. Alle unzulässigen Hauptdiagnosen (Tabelle D.5) sind unumgehbare Fehler und bewirken die Zuordnung des Datensatzes zur Fehler-DRG 961Z *Unzulässige Hauptdiagnose*
2. Die meisten Kodes in der Alterskonflikt-Liste „Säugling“ (Tabelle D.6a) sind unumgehbare Fehler, wenn sie als Hauptdiagnose angegeben sind und (i) der Patient zwischen 28 und 364/5 Tage alt ist und ein Aufnahmegewicht von mehr als 2.500 Gramm hat oder (ii) der Patient 1 Jahr oder älter ist. „Säuglingsbehandlungsepisoden“ mit einem unumgehbaren Fehler werden der DRG 963Z *Neonatale Diagnose unvereinbar mit Alter oder Gewicht* zugewiesen.
3. Alle anderen klinischen Merkmale – Kode für externe Ursache und Alterskonflikt (mit Ausnahme eines Konfliktes in der Liste „Säugling“) – werden mit einem Warnkennzeichen versehen, sind jedoch keine unumgehbaren Fehler.

E.5 Grouper-Status

Nach Abschluss des Gruppierungsvorganges erhält jeder Datensatz einen Grouper-Status-Kode (GST), der anzeigt, dass die Gruppierung erfolgreich war. Wenn der Grouper beim Versuch, einen Datensatz einer DRG zuzuweisen, auf fehlende oder ungültige Informationen trifft, wird der Datensatz der DRG 960Z *Nicht gruppierbar* zugeordnet, wobei die Art des Fehlers im Grouper-Status durch eine Zahl, die nicht Null ist, gekennzeichnet wird. In Tabelle E.4 finden sich nähere Informationen zu jedem GST.

Tabelle E.4 Grouper-Status-Kodes (GST)

Statuskode	Beschreibung	Bedingungen
00	Normale Gruppierung	Normale Gruppierung
01	Ungültige oder fehlende Hauptdiagnose	Ungültige oder fehlende Hauptdiagnose
02	Diagnosekode als Hauptdiagnose nicht zulässig	1. Es wurde ein Kode der Gruppen V, W, X, Y als Hauptdiagnose angegeben oder 2. die Hauptdiagnose gehört zu keiner MDC.
03	Datensatz erfüllt für keine DRG die Kriterien	Die Hauptdiagnose gehört zu keiner DRG oder der Datensatz kann entsprechend den logischen Zuordnungskriterien keiner DRG zugewiesen werden.
04	Ungültiges Alter	Es kann kein Alter im gültigen Bereich ermittelt werden.
05	Ungültiges Geschlecht	Ungültiges Geschlecht
06	Ungültige Entlassart, ungültige Aufnahmeart	Ungültige Entlassart, ungültige Aufnahmeart
07	Ungültiges Aufnahmegewicht	Wenn das Alter eines Patienten laut Eingabe oder Berechnung 365 Tage oder weniger beträgt, der Wert im Feld Aufnahmegewicht ungültig ist und die Hauptdiagnose eine Neugeborenendiagnose ist
08	Ungültige Verweildauer	Die Verweildauer kann aufgrund der Daten nicht ermittelt werden.
09	Ungültiger Status der Verweildauer ein Belegungstag	Der Status der Verweildauer ein Belegungstag kann anhand der Daten nicht ermittelt werden.

Tabelle D.5 Unzulässige Hauptdiagnosen

Code	Beschreibung
A63.0	Anogenitale (venerische) Warzen
B23.0	Akutes HIV-Infektionssyndrom
B90.0	Folgezustände einer Tuberkulose des Zentralnervensystems
B90.1	Folgezustände einer Tuberkulose des Urogenitalsystems
B90.2	Folgezustände einer Tuberkulose der Knochen und der Gelenke
B90.8	Folgezustände einer Tuberkulose sonstiger Organe
B90.9	Folgezustände einer Tuberkulose der Atmungsorgane und einer nicht näher bezeichneten Tuberkulose
B91	Folgezustände der Poliomyelitis
B92	Folgezustände der Lepra
B94.0	Folgezustände des Trachoms
B94.1	Folgezustände der Virusenzephalitis
B94.2	Folgezustände der Virushepatitis
B94.8	Folgezustände sonstiger näher bezeichneter infektiöser und parasitärer Krankheiten
B94.9	Folgezustände nicht näher bezeichneter infektiöser oder parasitärer Krankheit
B95.0	Streptokokken, Gruppe A, als Ursache von Krankheiten, die in anderen Kapiteln klassifiziert sind
B95.1	Streptokokken, Gruppe B, als Ursache von Krankheiten, die in anderen Kapiteln klassifiziert sind
B95.2	Streptokokken, Gruppe D, und Enterokokken als Ursache von Krankheiten, die in anderen Kapiteln klassifiziert sind
B95.3	Streptococcus pneumoniae als Ursache von Krankheiten, die in anderen Kapiteln klassifiziert sind
B95.41	Streptokokken, Gruppe C, als Ursache von Krankheiten, die in anderen Kapiteln klassifiziert sind
B95.42	Streptokokken, Gruppe G, als Ursache von Krankheiten, die in anderen Kapiteln klassifiziert sind
B95.48	Sonstige näher bezeichnete Streptokokken als Ursache von Krankheiten, die in anderen Kapiteln klassifiziert sind
B95.5	Nicht näher bezeichnete Streptokokken als Ursache von Krankheiten, die in anderen Kapiteln klassifiziert sind
B95.6	Staphylococcus aureus als Ursache von Krankheiten, die in anderen Kapiteln klassifiziert sind
B95.7	Sonstige Staphylokokken als Ursache von Krankheiten, die in anderen Kapiteln klassifiziert sind
B95.8	Nicht näher bezeichnete Staphylokokken als Ursache von Krankheiten, die in anderen Kapiteln klassifiziert sind
B95.90	Sonstige näher bezeichnete grampositive aerobe Erreger als Ursache von Krankheiten, die in anderen Kapiteln klassifiziert sind
B95.91	Sonstige näher bezeichnete grampositive anaerobe, nicht sporenbildende Erreger als Ursache von Krankheiten, die in anderen Kapiteln klassifiziert sind
B96.0	Mykoplasmen und Ureaplasmen als Ursache von Krankheiten, die in anderen Kapiteln klassifiziert sind
B96.2	Escherichia coli [E. coli] und andere Enterobacterales als Ursache von Krankheiten, die in anderen Kapiteln klassifiziert sind
B96.3	Haemophilus und Moraxella als Ursache von Krankheiten, die in anderen Kapiteln klassifiziert sind
B96.5	Pseudomonas und andere Nonfermenter als Ursache von Krankheiten, die in anderen Kapiteln klassifiziert sind
B96.6	Bacteroides fragilis [B. fragilis] und andere gramnegative Anaerobier als Ursache von Krankheiten, die in anderen Kapiteln klassifiziert sind
B96.7	Clostridium perfringens [C. perfringens] und andere grampositive, sporenbildende Anaerobier als Ursache von Krankheiten, die in anderen Kapiteln klassifiziert sind
B96.8	Sonstige näher bezeichnete Bakterien als Ursache von Krankheiten, die in anderen Kapiteln klassifiziert sind
B97.0	Adenoviren als Ursache von Krankheiten, die in anderen Kapiteln klassifiziert sind
B97.1	Enteroviren als Ursache von Krankheiten, die in anderen Kapiteln klassifiziert sind
B97.2	Coronaviren als Ursache von Krankheiten, die in anderen Kapiteln klassifiziert sind
B97.3	Retroviren als Ursache von Krankheiten, die in anderen Kapiteln klassifiziert sind
B97.4	Respiratory-Syncytial-Viren [RS-Viren] als Ursache von Krankheiten, die in anderen Kapiteln klassifiziert sind
B97.5	Reoviren als Ursache von Krankheiten, die in anderen Kapiteln klassifiziert sind
B97.6	Parvoviren als Ursache von Krankheiten, die in anderen Kapiteln klassifiziert sind
B97.7	Papillomaviren als Ursache von Krankheiten, die in anderen Kapiteln klassifiziert sind
B97.8	Sonstige Viren als Ursache von Krankheiten, die in anderen Kapiteln klassifiziert sind
B98.0	Helicobacter pylori [H. pylori] als Ursache von Krankheiten, die in anderen Kapiteln klassifiziert sind
B98.1	Vibrio vulnificus als Ursache von Krankheiten, die in anderen Kapiteln klassifiziert sind
C94.8	Blastenkrise bei chronischer myeloischer Leukämie [CML]
C95.8	Leukämie, refraktär auf Standard-Induktionstherapie
C97	Bösartige Neubildungen als Primärtumoren an mehreren Lokalisationen
D63.0	Anämie bei Neubildungen {C00-D48}
D63.8	Anämie bei sonstigen chronischen, anderenorts klassifizierten Krankheiten
D77	Sonstige Krankheiten des Blutes und der blutbildenden Organe bei anderenorts klassifizierten Krankheiten
E35.0	Krankheiten der Schilddrüse bei anderenorts klassifizierten Krankheiten
E35.1	Krankheiten der Nebennieren bei anderenorts klassifizierten Krankheiten
E35.8	Krankheiten sonstiger endokriner Drüsen bei anderenorts klassifizierten Krankheiten
E64.0	Folgen der Energie- und Eiweißmangelernährung
E64.1	Folgen des Vitamin-A-Mangels
E64.2	Folgen des Vitamin-C-Mangels
E64.3	Folgen der Rachitis
E64.8	Folgen sonstiger alimentärer Mangelzustände
E64.9	Folgen eines nicht näher bezeichneten alimentären Mangelzustandes
E68	Folgen der Überernährung
E87.7	Flüssigkeitsüberschuss
E90	Ernährungs- und Stoffwechselstörungen bei anderenorts klassifizierten Krankheiten
F00.0	Demenz bei Alzheimer-Krankheit, mit frühem Beginn (Typ 2) {G30.0}
F00.1	Demenz bei Alzheimer-Krankheit, mit spätem Beginn (Typ 1) {G30.1}
F00.2	Demenz bei Alzheimer-Krankheit, atypische oder gemischte Form {G30.8}
F00.9	Demenz bei Alzheimer-Krankheit, nicht näher bezeichnet {G30.9}

Code	Beschreibung
F02.0	Demenz bei Pick-Krankheit {G31.0}
F02.1	Demenz bei Creutzfeldt-Jakob-Krankheit {A81.0}
F02.2	Demenz bei Chorea Huntington {G10}
F02.3	Demenz bei primärem Parkinson-Syndrom {G20.-}
F02.4	Demenz bei HIV-Krankheit [Humane Immundefizienz-Viruskrankheit] {B22}
F02.8	Demenz bei anderenorts klassifizierten Krankheitsbildern
G01	Meningitis bei anderenorts klassifizierten bakteriellen Krankheiten
G02.0	Meningitis bei anderenorts klassifizierten Viruskrankheiten
G02.1	Meningitis bei anderenorts klassifizierten Mykosen
G02.8	Meningitis bei sonstigen näher bezeichneten anderenorts klassifizierten infektiösen und parasitären Krankheiten
G05.0	Enzephalitis, Myelitis und Enzephalomyelitis bei anderenorts klassifizierten bakteriellen Krankheiten
G05.1	Enzephalitis, Myelitis und Enzephalomyelitis bei anderenorts klassifizierten Viruskrankheiten
G05.2	Enzephalitis, Myelitis und Enzephalomyelitis bei sonstigen anderenorts klassifizierten infektiösen und parasitären Krankheiten
G05.8	Enzephalitis, Myelitis und Enzephalomyelitis bei sonstigen anderenorts klassifizierten Krankheiten
G07	Intrakranielle und intraspinale Abszesse und Granulome bei anderenorts klassifizierten Krankheiten
G09	Folgen entzündlicher Krankheiten des Zentralnervensystems
G13.0	Paraneoplastische Neuromyopathie und Neuropathie
G13.1	Sonstige Systematrophien, vorwiegend das Zentralnervensystem betreffend, bei Neubildungen
G13.2	Systematrophie, vorwiegend das Zentralnervensystem betreffend, bei Myxödem {E00.1}, {E03.-}
G13.8	Systematrophien, vorwiegend das Zentralnervensystem betreffend, bei sonstigen anderenorts klassifizierten Krankheiten
G14	Postpolio-Syndrom
G22	Parkinson-Syndrom bei anderenorts klassifizierten Krankheiten
G26	Extrapyramidale Krankheiten und Bewegungsstörungen bei anderenorts klassifizierten Krankheiten
G31.1	Senile Degeneration des Gehirns, anderenorts nicht klassifiziert
G32.0	Subakute kombinierte Degeneration des Rückenmarks bei anderenorts klassifizierten Krankheiten
G32.8	Sonstige näher bezeichnete degenerative Krankheiten des Nervensystems bei anderenorts klassifizierten Krankheiten
G46.0	Arteria-cerebri-media-Syndrom {I66.0}
G46.1	Arteria-cerebri-anterior-Syndrom {I66.1}
G46.2	Arteria-cerebri-posterior-Syndrom {I66.2}
G46.3	Hirnstammsyndrom {I60-I67}
G46.4	Kleinhirnsyndrom {I60-I67}
G46.5	Rein motorisches lakunäres Syndrom {I60-I67}
G46.6	Rein sensorisches lakunäres Syndrom {I60-I67}
G46.7	Sonstige lakunäre Syndrome {I60-I67}
G46.8	Sonstige Syndrome der Hirngefäße bei zerebrovaskulären Krankheiten {I60-I67}
G53.0	Neuralgie nach Zoster {B02.2}
G53.1	Multiple Hirnnervenlähmungen bei anderenorts klassifizierten infektiösen und parasitären Krankheiten {A00-B99}
G53.2	Multiple Hirnnervenlähmungen bei Sarkoidose {D86.8}
G53.3	Multiple Hirnnervenlähmungen bei Neubildungen {C00-D48}
G53.8	Sonstige Krankheiten der Hirnnerven bei sonstigen anderenorts klassifizierten Krankheiten
G55.0	Kompression von Nervenwurzeln und Nervenplexus bei Neubildungen {C00-D48}
G55.1	Kompression von Nervenwurzeln und Nervenplexus bei Bandscheibenschäden {M50-M51}
G55.2	Kompression von Nervenwurzeln und Nervenplexus bei Spondylose {M47.-}
G55.3	Kompression von Nervenwurzeln und Nervenplexus bei sonstigen Krankheiten der Wirbelsäule und des Rückens {M45-M46}, {M48.-}, {M53-M54}
G55.8	Kompression von Nervenwurzeln und Nervenplexus bei sonstigen anderenorts klassifizierten Krankheiten
G59.0	Diabetische Mononeuropathie {E10-E14, vierte Stelle .4}
G59.8	Sonstige Mononeuropathien bei anderenorts klassifizierten Krankheiten
G63.0	Polyneuropathie bei anderenorts klassifizierten infektiösen und parasitären Krankheiten
G63.1	Polyneuropathie bei Neubildungen {C00-D48}
G63.2	Diabetische Polyneuropathie {E10-E14, vierte Stelle .4}
G63.3	Polyneuropathie bei sonstigen endokrinen und Stoffwechselkrankheiten {E00-E07}, {E15-E16}, {E20-E34}, {E70-E89}
G63.4	Polyneuropathie bei alimentären Mangelzuständen {E40-E64}
G63.5	Polyneuropathie bei Systemkrankheiten des Bindegewebes {M30-M35}
G63.6	Polyneuropathie bei sonstigen Krankheiten des Muskel-Skelett-Systems {M00-M25}, {M40-M96}
G63.8	Polyneuropathie bei sonstigen anderenorts klassifizierten Krankheiten
G73.0	Myastheniesyndrome bei endokrinen Krankheiten
G73.1	Lambert-Eaton-Syndrom {C00-D48}
G73.2	Sonstige Myastheniesyndrome bei Neubildungen {C00-D48}
G73.3	Myastheniesyndrome bei sonstigen anderenorts klassifizierten Krankheiten
G73.4	Myopathie bei anderenorts klassifizierten infektiösen und parasitären Krankheiten
G73.5	Myopathie bei endokrinen Krankheiten
G73.6	Myopathie bei Stoffwechselkrankheiten
G73.7	Myopathie bei sonstigen anderenorts klassifizierten Krankheiten
G82.60	Funktionale Höhe der Schädigung des Rückenmarkes: C1-C3
G82.61	Funktionale Höhe der Schädigung des Rückenmarkes: C4-C5
G82.62	Funktionale Höhe der Schädigung des Rückenmarkes: C6-C8
G82.63	Funktionale Höhe der Schädigung des Rückenmarkes: T1-T6
G82.64	Funktionale Höhe der Schädigung des Rückenmarkes: T7-T10
G82.65	Funktionale Höhe der Schädigung des Rückenmarkes: T11-L1
G82.66	Funktionale Höhe der Schädigung des Rückenmarkes: L2-S1
G82.67	Funktionale Höhe der Schädigung des Rückenmarkes: S2-S5
G82.69	Funktionale Höhe der Schädigung des Rückenmarkes: Nicht näher bezeichnet
G94.0	Hydrozephalus bei anderenorts klassifizierten infektiösen und parasitären Krankheiten {A00-B99}
G94.1	Hydrozephalus bei Neubildungen {C00-D48}
G94.2	Hydrozephalus bei sonstigen anderenorts klassifizierten Krankheiten

Code	Beschreibung
G94.30	Enzephalopathie bei anderenorts klassifizierten endokrinen und Stoffwechselkrankheiten
G94.31	Enzephalopathie bei anderenorts klassifizierten infektiösen und parasitären Krankheiten
G94.32	Septische Enzephalopathie
G94.39	Nicht näher bezeichnete Enzephalopathie bei sonstigen anderenorts klassifizierten Krankheiten
G94.8	Sonstige näher bezeichnete Krankheiten des Gehirns bei anderenorts klassifizierten Krankheiten
G99.00	Gastroparese bei autonomer Neuropathie bei endokrinen und Stoffwechselkrankheiten
G99.08	Sonstige autonome Neuropathie bei endokrinen und Stoffwechselkrankheiten
G99.1	Sonstige Krankheiten des autonomen Nervensystems bei sonstigen anderenorts klassifizierten Krankheiten
G99.2	Myelopathie bei anderenorts klassifizierten Krankheiten
G99.8	Sonstige näher bezeichnete Krankheiten des Nervensystems bei anderenorts klassifizierten Krankheiten
H03.0	Parasitenbefall des Augenlides bei anderenorts klassifizierten Krankheiten
H03.1	Beteiligung des Augenlides bei sonstigen anderenorts klassifizierten Infektionskrankheiten
H03.8	Beteiligung des Augenlides bei sonstigen anderenorts klassifizierten Krankheiten
H06.0	Affektionen des Tränenapparates bei anderenorts klassifizierten Krankheiten
H06.1	Parasitenbefall der Orbita bei anderenorts klassifizierten Krankheiten
H06.2	Exophthalmus bei Funktionsstörung der Schilddrüse {E05.-}
H06.3	Sonstige Affektionen der Orbita bei anderenorts klassifizierten Krankheiten
H13.0	Filarienbefall der Konjunktiva {B74.-}
H13.1	Konjunktivitis bei anderenorts klassifizierten infektiösen und parasitären Krankheiten
H13.2	Konjunktivitis bei sonstigen anderenorts klassifizierten Krankheiten
H13.3	Okuläres Pemphigoid {L12.-}
H13.8	Sonstige Affektionen der Konjunktiva bei anderenorts klassifizierten Krankheiten
H19.0	Skleritis und Episkleritis bei anderenorts klassifizierten Krankheiten
H19.1	Keratitis und Keratokonjunktivitis durch Herpesviren {B00.5}
H19.2	Keratitis und Keratokonjunktivitis bei sonstigen anderenorts klassifizierten infektiösen und parasitären Krankheiten
H19.3	Keratitis und Keratokonjunktivitis bei sonstigen anderenorts klassifizierten Krankheiten
H19.8	Sonstige Affektionen der Sklera und der Hornhaut bei anderenorts klassifizierten Krankheiten
H22.0	Iridozyklitis bei anderenorts klassifizierten infektiösen und parasitären Krankheiten
H22.1	Iridozyklitis bei sonstigen anderenorts klassifizierten Krankheiten
H22.8	Sonstige Affektionen der Iris und des Ziliarkörpers bei anderenorts klassifizierten Krankheiten
H28.0	Diabetische Katarakt {E10-E14, vierte Stelle .3}
H28.1	Katarakt bei sonstigen endokrinen, Ernährungs- und Stoffwechselkrankheiten
H28.2	Katarakt bei sonstigen anderenorts klassifizierten Krankheiten
H28.8	Sonstige Affektionen der Linse bei anderenorts klassifizierten Krankheiten
H32.0	Chorioretinitis bei anderenorts klassifizierten infektiösen und parasitären Krankheiten

Code	Beschreibung
H32.8	Sonstige chorioretinale Affektionen bei anderenorts klassifizierten Krankheiten
H36.0	Retinopathia diabetica {E10-E14, vierte Stelle .3}
H36.8	Sonstige Affektionen der Netzhaut bei anderenorts klassifizierten Krankheiten
H42.0	Glaukom bei endokrinen, Ernährungs- und Stoffwechselkrankheiten
H42.8	Glaukom bei sonstigen anderenorts klassifizierten Krankheiten
H45.0	Glaskörperblutung bei anderenorts klassifizierten Krankheiten
H45.1	Endophthalmitis bei anderenorts klassifizierten Krankheiten
H45.8	Sonstige Affektionen des Glaskörpers und des Augapfels bei anderenorts klassifizierten Krankheiten
H48.0	Optikusatrophie bei anderenorts klassifizierten Krankheiten
H48.1	Retrobulbäre Neuritis bei anderenorts klassifizierten Krankheiten
H48.8	Sonstige Affektionen des N. opticus und der Sehbahn bei anderenorts klassifizierten Krankheiten
H58.0	Anomalien der Pupillenreaktion bei anderenorts klassifizierten Krankheiten
H58.1	Sehstörungen bei anderenorts klassifizierten Krankheiten
H58.21	Stadium 1 der chronischen Augen-Graft-versus-Host-Krankheit {T86.05}, {T86.06}
H58.22	Stadium 2 der chronischen Augen-Graft-versus-Host-Krankheit {T86.06}
H58.23	Stadium 3 der chronischen Augen-Graft-versus-Host-Krankheit {T86.07}
H58.8	Sonstige näher bezeichnete Affektionen der Augen und der Augenanhangsgebilde bei anderenorts klassifizierten Krankheiten
H62.0	Otitis externa bei anderenorts klassifizierten bakteriellen Krankheiten
H62.1	Otitis externa bei anderenorts klassifizierten Viruskrankheiten
H62.2	Otitis externa bei anderenorts klassifizierten Mykosen
H62.3	Otitis externa bei sonstigen anderenorts klassifizierten infektiösen und parasitären Krankheiten
H62.4	Otitis externa bei sonstigen anderenorts klassifizierten Krankheiten
H62.8	Sonstige Krankheiten des äußeren Ohres bei anderenorts klassifizierten Krankheiten
H67.0	Otitis media bei anderenorts klassifizierten bakteriellen Krankheiten
H67.1	Otitis media bei anderenorts klassifizierten Viruskrankheiten
H67.8	Otitis media bei sonstigen anderenorts klassifizierten Krankheiten
H75.0	Mastoiditis bei anderenorts klassifizierten infektiösen und parasitären Krankheiten
H75.8	Sonstige näher bezeichnete Krankheiten des Mittelohres und des Warzenfortsatzes bei anderenorts klassifizierten Krankheiten
H82	Schwindelsyndrome bei anderenorts klassifizierten Krankheiten
H94.0	Entzündung des N. vestibulocochlearis [VIII. Hirnnerv] bei anderenorts klassifizierten infektiösen und parasitären Krankheiten
H94.8	Sonstige näher bezeichnete Krankheiten des Ohres bei anderenorts klassifizierten Krankheiten
I25.20	Alter Myokardinfarkt: 29 Tage bis unter 4 Monate zurückliegend
I25.21	Alter Myokardinfarkt: 4 Monate bis unter 1 Jahr zurückliegend

Code	Beschreibung
I25.22	Alter Myokardinfarkt: 1 Jahr und länger zurückliegend
I25.29	Alter Myokardinfarkt: Nicht näher bezeichnet
I32.0	Perikarditis bei anderenorts klassifizierten bakteriellen Krankheiten
I32.1	Perikarditis bei sonstigen anderenorts klassifizierten infektiösen und parasitären Krankheiten
I32.8	Perikarditis bei sonstigen anderenorts klassifizierten Krankheiten
I39.0	Mitralklappenkrankheiten bei anderenorts klassifizierten Krankheiten
I39.1	Aortenklappenkrankheiten bei anderenorts klassifizierten Krankheiten
I39.2	Trikuspidalklappenkrankheiten bei anderenorts klassifizierten Krankheiten
I39.3	Pulmonalklappenkrankheiten bei anderenorts klassifizierten Krankheiten
I39.4	Krankheiten mehrerer Herzklappen bei anderenorts klassifizierten Krankheiten
I39.8	Endokarditis bei anderenorts klassifizierten Krankheiten, Herzklappe nicht näher bezeichnet
I41.0	Myokarditis bei anderenorts klassifizierten bakteriellen Krankheiten
I41.1	Myokarditis bei anderenorts klassifizierten Viruskrankheiten
I41.2	Myokarditis bei sonstigen anderenorts klassifizierten infektiösen und parasitären Krankheiten
I41.8	Myokarditis bei sonstigen anderenorts klassifizierten Krankheiten
I43.0	Kardiomyopathie bei anderenorts klassifizierten infektiösen und parasitären Krankheiten
I43.1	Kardiomyopathie bei Stoffwechselkrankheiten
I43.2	Kardiomyopathie bei alimentären Krankheiten
I43.8	Kardiomyopathie bei sonstigen anderenorts klassifizierten Krankheiten
I50.02	Rechtsherzinsuffizienz ohne Beschwerden
I50.03	Rechtsherzinsuffizienz mit Beschwerden bei stärkerer Belastung
I50.04	Rechtsherzinsuffizienz mit Beschwerden bei leichterer Belastung
I50.05	Rechtsherzinsuffizienz mit Beschwerden in Ruhe
I52.0	Sonstige Herzkrankheiten bei anderenorts klassifizierten bakteriellen Krankheiten
I52.1	Sonstige Herzkrankheiten bei sonstigen anderenorts klassifizierten infektiösen und parasitären Krankheiten
I52.8	Sonstige Herzkrankheiten bei sonstigen anderenorts klassifizierten Krankheiten
I68.0	Zerebrale Amyloidangiopathie {E85.-}
I68.1	Zerebrale Arteriitis bei anderenorts klassifizierten infektiösen und parasitären Krankheiten
I68.2	Zerebrale Arteriitis bei sonstigen anderenorts klassifizierten Krankheiten
I68.8	Sonstige zerebrovaskuläre Störungen bei anderenorts klassifizierten Krankheiten
I69.0	Folgen einer Subarachnoidalblutung
I69.1	Folgen einer intrazerebralen Blutung
I69.2	Folgen einer sonstigen nichttraumatischen intrakraniellen Blutung
I69.3	Folgen eines Hirninfarktes
I69.4	Folgen eines Schlaganfalls, nicht als Blutung oder Infarkt bezeichnet
I69.8	Folgen sonstiger und nicht näher bezeichneter zerebrovaskulärer Krankheiten
I79.0	Aortenaneurysma bei anderenorts klassifizierten Krankheiten
I79.1	Aortitis bei anderenorts klassifizierten Krankheiten
I79.2	Periphere Angiopathie bei anderenorts klassifizierten Krankheiten

Code	Beschreibung
I79.8	Sonstige Krankheiten der Arterien, Arteriolen und Kapillaren bei anderenorts klassifizierten Krankheiten
I98.0	Kardiovaskuläre Syphilis
I98.1	Störungen des Herz-Kreislaufsystems bei sonstigen anderenorts klassifizierten infektiösen und parasitären Krankheiten
I98.2	Ösophagus- und Magenvarizen bei anderenorts klassifizierten Krankheiten, ohne Angabe einer Blutung
I98.3	Ösophagus- und Magenvarizen bei anderenorts klassifizierten Krankheiten, mit Angabe einer Blutung
I98.8	Sonstige näher bezeichnete Störungen des Kreislaufsystems bei anderenorts klassifizierten Krankheiten
J17.0	Pneumonie bei anderenorts klassifizierten bakteriellen Krankheiten
J17.1	Pneumonie bei anderenorts klassifizierten Viruskrankheiten
J17.2	Pneumonie bei Mykosen
J17.3	Pneumonie bei parasitären Krankheiten
J17.8	Pneumonie bei sonstigen anderenorts klassifizierten Krankheiten
J91	Pleuraerguss bei anderenorts klassifizierten Krankheiten
J99.0	Lungenkrankheit bei seropositiver chronischer Polyarthritis {M05.1-}
J99.1	Krankheiten der Atemwege bei sonstigen diffusen Bindegewebskrankheiten
J99.21	Stadium 1 der chronischen Lungen-Graft-versus-Host-Krankheit {T86.06}
J99.22	Stadium 2 der chronischen Lungen-Graft-versus-Host-Krankheit {T86.07}
J99.23	Stadium 3 der chronischen Lungen-Graft-versus-Host-Krankheit {T86.07}
J99.8	Krankheiten der Atemwege bei sonstigen anderenorts klassifizierten Krankheiten
K23.0	Tuberkulose des Ösophagus {A18.8}
K23.1	Megaösophagus bei Chagas-Krankheit {B57.3}
K23.8	Krankheiten des Ösophagus bei sonstigen anderenorts klassifizierten Krankheiten
K67.0	Chlamydienperitonitis {A74.8}
K67.1	Gonokokkenperitonitis {A54.8}
K67.2	Syphilitische Peritonitis {A52.7}
K67.3	Tuberkulöse Peritonitis {A18.3}
K67.8	Sonstige Krankheiten des Peritoneums bei anderenorts klassifizierten Infektionskrankheiten
K72.71	Hepatische Enzephalopathie Grad 1
K72.72	Hepatische Enzephalopathie Grad 2
K72.73	Hepatische Enzephalopathie Grad 3
K72.74	Hepatische Enzephalopathie Grad 4
K72.79	Hepatische Enzephalopathie, Grad nicht näher bezeichnet
K74.70	Leberzirrhose, Stadium Child-Pugh A
K74.71	Leberzirrhose, Stadium Child-Pugh B
K74.72	Leberzirrhose, Stadium Child-Pugh C
K77.0	Leberkrankheiten bei anderenorts klassifizierten infektiösen und parasitären Krankheiten
K77.11	Stadium 1 der akuten Leber-Graft-versus-Host-Krankheit {T86.01}
K77.12	Stadium 2 der akuten Leber-Graft-versus-Host-Krankheit {T86.02}
K77.13	Stadium 3 der akuten Leber-Graft-versus-Host-Krankheit {T86.02}
K77.14	Stadium 4 der akuten Leber-Graft-versus-Host-Krankheit {T86.02}
K77.21	Stadium 1 der chronischen Leber-Graft-versus-Host-Krankheit {T86.05}, {T86.06}
K77.22	Stadium 2 der chronischen Leber-Graft-versus-Host-Krankheit {T86.06}

PDX

Code	Beschreibung
K77.23	Stadium 3 der chronischen Leber-Graft-versus-Host-Krankheit {T86.07}
K77.8	Leberkrankheiten bei sonstigen anderenorts klassifizierten Krankheiten
K87.0	Krankheiten der Gallenblase und der Gallenwege bei anderenorts klassifizierten Krankheiten
K87.1	Krankheiten des Pankreas bei anderenorts klassifizierten Krankheiten
K93.0	Tuberkulose des Darmes, des Peritoneums und der Mesenteriallymphknoten {A18.3}
K93.1	Megakolon bei Chagas-Krankheit {B57.3}
K93.21	Stadium 1 der akuten Verdauungstrakt-Graft-versus-Host-Krankheit {T86.01}
K93.22	Stadium 2 der akuten Verdauungstrakt-Graft-versus-Host-Krankheit {T86.02}
K93.23	Stadium 3 der akuten Verdauungstrakt-Graft-versus-Host-Krankheit {T86.02}
K93.24	Stadium 4 der akuten Verdauungstrakt-Graft-versus-Host-Krankheit {T86.02}
K93.31	Stadium 1 der chronischen Verdauungstrakt-Graft-versus-Host-Krankheit {T86.05}, {T86.06}
K93.32	Stadium 2 der chronischen Verdauungstrakt-Graft-versus-Host-Krankheit {T86.06}
K93.33	Stadium 3 der chronischen Verdauungstrakt-Graft-versus-Host-Krankheit {T86.07}
K93.41	Stadium 1 der chronischen Mundschleimhaut-Graft-versus-Host-Krankheit {T86.05}, {T86.06}
K93.42	Stadium 2 der chronischen Mundschleimhaut-Graft-versus-Host-Krankheit {T86.06}
K93.43	Stadium 3 der chronischen Mundschleimhaut-Graft-versus-Host-Krankheit {T86.07}
K93.8	Krankheiten sonstiger näher bezeichneter Verdauungsorgane bei anderenorts klassifizierten Krankheiten
L14	Bullöse Dermatosen bei anderenorts klassifizierten Krankheiten
L40.70	Mittelschwere bis schwere Psoriasis
L45	Papulosquamöse Hautkrankheiten bei anderenorts klassifizierten Krankheiten
L54.0	Erythema marginatum bei akutem rheumatischem Fieber {I00}
L54.8	Erythem bei sonstigen anderenorts klassifizierten Krankheiten
L62.0	Pachydermoperiostose mit Uhrglasnägeln {M89.4-}
L62.8	Krankheiten der Nägel bei sonstigen anderenorts klassifizierten Krankheiten
L86	Keratom bei anderenorts klassifizierten Krankheiten
L99.0	Kutane Amyloidose {E85.-}
L99.11	Stadium 1 der akuten Haut-Graft-versus-Host-Krankheit
L99.12	Stadium 2 der akuten Haut-Graft-versus-Host-Krankheit
L99.13	Stadium 3 der akuten Haut-Graft-versus-Host-Krankheit
L99.14	Stadium 4 der akuten Haut-Graft-versus-Host-Krankheit
L99.21	Stadium 1 der chronischen Haut-Graft-versus-Host-Krankheit {T86.05}, {T86.06}
L99.22	Stadium 2 der chronischen Haut-Graft-versus-Host-Krankheit {T86.06}
L99.23	Stadium 3 der chronischen Haut-Graft-versus-Host-Krankheit {T86.07}
L99.8	Sonstige näher bezeichnete Krankheiten der Haut und der Unterhaut bei anderenorts klassifizierten Krankheiten
M01.00	Arthritis durch Meningokokken {A39.8}: Mehrere Lokalisationen
M01.01	Arthritis durch Meningokokken {A39.8}: Schulterregion
M01.02	Arthritis durch Meningokokken {A39.8}: Oberarm
M01.03	Arthritis durch Meningokokken {A39.8}: Unterarm
M01.04	Arthritis durch Meningokokken {A39.8}: Hand
M01.05	Arthritis durch Meningokokken {A39.8}: Beckenregion und Oberschenkel
M01.06	Arthritis durch Meningokokken {A39.8}: Unterschenkel
M01.07	Arthritis durch Meningokokken {A39.8}: Knöchel und Fuß
M01.08	Arthritis durch Meningokokken {A39.8}: Sonstige
M01.09	Arthritis durch Meningokokken {A39.8}: Nicht näher bezeichnete Lokalisation
M01.10	Tuberkulöse Arthritis {A18.0}: Mehrere Lokalisationen
M01.11	Tuberkulöse Arthritis {A18.0}: Schulterregion
M01.12	Tuberkulöse Arthritis {A18.0}: Oberarm
M01.13	Tuberkulöse Arthritis {A18.0}: Unterarm
M01.14	Tuberkulöse Arthritis {A18.0}: Hand
M01.15	Tuberkulöse Arthritis {A18.0}: Beckenregion und Oberschenkel
M01.16	Tuberkulöse Arthritis {A18.0}: Unterschenkel
M01.17	Tuberkulöse Arthritis {A18.0}: Knöchel und Fuß
M01.18	Tuberkulöse Arthritis {A18.0}: Sonstige
M01.19	Tuberkulöse Arthritis {A18.0}: Nicht näher bezeichnete Lokalisation
M01.20	Arthritis bei Lyme-Krankheit {A69.2}: Mehrere Lokalisationen
M01.21	Arthritis bei Lyme-Krankheit {A69.2}: Schulterregion
M01.22	Arthritis bei Lyme-Krankheit {A69.2}: Oberarm
M01.23	Arthritis bei Lyme-Krankheit {A69.2}: Unterarm
M01.24	Arthritis bei Lyme-Krankheit {A69.2}: Hand
M01.25	Arthritis bei Lyme-Krankheit {A69.2}: Beckenregion und Oberschenkel
M01.26	Arthritis bei Lyme-Krankheit {A69.2}: Unterschenkel
M01.27	Arthritis bei Lyme-Krankheit {A69.2}: Knöchel und Fuß
M01.28	Arthritis bei Lyme-Krankheit {A69.2}: Sonstige
M01.29	Arthritis bei Lyme-Krankheit {A69.2}: Nicht näher bezeichnete Lokalisation
M01.30	Arthritis bei sonstigen anderenorts klassifizierten bakteriellen Krankheiten: Mehrere Lokalisationen
M01.31	Arthritis bei sonstigen anderenorts klassifizierten bakteriellen Krankheiten: Schulterregion
M01.32	Arthritis bei sonstigen anderenorts klassifizierten bakteriellen Krankheiten: Oberarm
M01.33	Arthritis bei sonstigen anderenorts klassifizierten bakteriellen Krankheiten: Unterarm
M01.34	Arthritis bei sonstigen anderenorts klassifizierten bakteriellen Krankheiten: Hand
M01.35	Arthritis bei sonstigen anderenorts klassifizierten bakteriellen Krankheiten: Beckenregion und Oberschenkel
M01.36	Arthritis bei sonstigen anderenorts klassifizierten bakteriellen Krankheiten: Unterschenkel
M01.37	Arthritis bei sonstigen anderenorts klassifizierten bakteriellen Krankheiten: Knöchel und Fuß
M01.38	Arthritis bei sonstigen anderenorts klassifizierten bakteriellen Krankheiten: Sonstige
M01.39	Arthritis bei sonstigen anderenorts klassifizierten bakteriellen Krankheiten: Nicht näher bezeichnete Lokalisation
M01.40	Arthritis bei Röteln {B06.8}: Mehrere Lokalisationen
M01.41	Arthritis bei Röteln {B06.8}: Schulterregion
M01.42	Arthritis bei Röteln {B06.8}: Oberarm
M01.43	Arthritis bei Röteln {B06.8}: Unterarm
M01.44	Arthritis bei Röteln {B06.8}: Hand
M01.45	Arthritis bei Röteln {B06.8}: Beckenregion und Oberschenkel
M01.46	Arthritis bei Röteln {B06.8}: Unterschenkel
M01.47	Arthritis bei Röteln {B06.8}: Knöchel und Fuß
M01.48	Arthritis bei Röteln {B06.8}: Sonstige

Code	Beschreibung
M01.49	Arthritis bei Röteln {B06.8}: Nicht näher bezeichnete Lokalisation
M01.50	Arthritis bei sonstigen anderenorts klassifizierten Viruskrankheiten: Mehrere Lokalisationen
M01.51	Arthritis bei sonstigen anderenorts klassifizierten Viruskrankheiten: Schulterregion
M01.52	Arthritis bei sonstigen anderenorts klassifizierten Viruskrankheiten: Oberarm
M01.53	Arthritis bei sonstigen anderenorts klassifizierten Viruskrankheiten: Unterarm
M01.54	Arthritis bei sonstigen anderenorts klassifizierten Viruskrankheiten: Hand
M01.55	Arthritis bei sonstigen anderenorts klassifizierten Viruskrankheiten: Beckenregion und Oberschenkel
M01.56	Arthritis bei sonstigen anderenorts klassifizierten Viruskrankheiten: Unterschenkel
M01.57	Arthritis bei sonstigen anderenorts klassifizierten Viruskrankheiten: Knöchel und Fuß
M01.58	Arthritis bei sonstigen anderenorts klassifizierten Viruskrankheiten: Sonstige
M01.59	Arthritis bei sonstigen anderenorts klassifizierten Viruskrankheiten: Nicht näher bezeichnete Lokalisation
M01.60	Arthritis bei Mykosen {B35-B49}: Mehrere Lokalisationen
M01.61	Arthritis bei Mykosen {B35-B49}: Schulterregion
M01.62	Arthritis bei Mykosen {B35-B49}: Oberarm
M01.63	Arthritis bei Mykosen {B35-B49}: Unterarm
M01.64	Arthritis bei Mykosen {B35-B49}: Hand
M01.65	Arthritis bei Mykosen {B35-B49}: Beckenregion und Oberschenkel
M01.66	Arthritis bei Mykosen {B35-B49}: Unterschenkel
M01.67	Arthritis bei Mykosen {B35-B49}: Knöchel und Fuß
M01.68	Arthritis bei Mykosen {B35-B49}: Sonstige
M01.69	Arthritis bei Mykosen {B35-B49}: Nicht näher bezeichnete Lokalisation
M01.80	Arthritis bei sonstigen anderenorts klassifizierten infektiösen und parasitären Krankheiten: Mehrere Lokalisationen
M01.81	Arthritis bei sonstigen anderenorts klassifizierten infektiösen und parasitären Krankheiten: Schulterregion
M01.82	Arthritis bei sonstigen anderenorts klassifizierten infektiösen und parasitären Krankheiten: Oberarm
M01.83	Arthritis bei sonstigen anderenorts klassifizierten infektiösen und parasitären Krankheiten: Unterarm
M01.84	Arthritis bei sonstigen anderenorts klassifizierten infektiösen und parasitären Krankheiten: Hand
M01.85	Arthritis bei sonstigen anderenorts klassifizierten infektiösen und parasitären Krankheiten: Beckenregion und Oberschenkel
M01.86	Arthritis bei sonstigen anderenorts klassifizierten infektiösen und parasitären Krankheiten: Unterschenkel
M01.87	Arthritis bei sonstigen anderenorts klassifizierten infektiösen und parasitären Krankheiten: Knöchel und Fuß
M01.88	Arthritis bei sonstigen anderenorts klassifizierten infektiösen und parasitären Krankheiten: Sonstige
M01.89	Arthritis bei sonstigen anderenorts klassifizierten infektiösen und parasitären Krankheiten: Nicht näher bezeichnete Lokalisation
M03.00	Arthritis nach Meningokokkeninfektion {A39.8}: Mehrere Lokalisationen
M03.01	Arthritis nach Meningokokkeninfektion {A39.8}: Schulterregion
M03.02	Arthritis nach Meningokokkeninfektion {A39.8}: Oberarm
M03.03	Arthritis nach Meningokokkeninfektion {A39.8}: Unterarm
M03.04	Arthritis nach Meningokokkeninfektion {A39.8}: Hand
M03.05	Arthritis nach Meningokokkeninfektion {A39.8}: Beckenregion und Oberschenkel
M03.06	Arthritis nach Meningokokkeninfektion {A39.8}: Unterschenkel
M03.07	Arthritis nach Meningokokkeninfektion {A39.8}: Knöchel und Fuß
M03.08	Arthritis nach Meningokokkeninfektion {A39.8}: Sonstige
M03.09	Arthritis nach Meningokokkeninfektion {A39.8}: Nicht näher bezeichnete Lokalisation
M03.10	Postinfektiöse Arthritis bei Syphilis: Mehrere Lokalisationen
M03.11	Postinfektiöse Arthritis bei Syphilis: Schulterregion
M03.12	Postinfektiöse Arthritis bei Syphilis: Oberarm
M03.13	Postinfektiöse Arthritis bei Syphilis: Unterarm
M03.14	Postinfektiöse Arthritis bei Syphilis: Hand
M03.15	Postinfektiöse Arthritis bei Syphilis: Beckenregion und Oberschenkel
M03.16	Postinfektiöse Arthritis bei Syphilis: Unterschenkel
M03.17	Postinfektiöse Arthritis bei Syphilis: Knöchel und Fuß
M03.18	Postinfektiöse Arthritis bei Syphilis: Sonstige
M03.19	Postinfektiöse Arthritis bei Syphilis: Nicht näher bezeichnete Lokalisation
M03.20	Sonstige postinfektiöse Arthritiden bei anderenorts klassifizierten Krankheiten: Mehrere Lokalisationen
M03.21	Sonstige postinfektiöse Arthritiden bei anderenorts klassifizierten Krankheiten: Schulterregion
M03.22	Sonstige postinfektiöse Arthritiden bei anderenorts klassifizierten Krankheiten: Oberarm
M03.23	Sonstige postinfektiöse Arthritiden bei anderenorts klassifizierten Krankheiten: Unterarm
M03.24	Sonstige postinfektiöse Arthritiden bei anderenorts klassifizierten Krankheiten: Hand
M03.25	Sonstige postinfektiöse Arthritiden bei anderenorts klassifizierten Krankheiten: Beckenregion und Oberschenkel
M03.26	Sonstige postinfektiöse Arthritiden bei anderenorts klassifizierten Krankheiten: Unterschenkel
M03.27	Sonstige postinfektiöse Arthritiden bei anderenorts klassifizierten Krankheiten: Knöchel und Fuß
M03.28	Sonstige postinfektiöse Arthritiden bei anderenorts klassifizierten Krankheiten: Sonstige
M03.29	Sonstige postinfektiöse Arthritiden bei anderenorts klassifizierten Krankheiten: Nicht näher bezeichnete Lokalisation
M03.60	Reaktive Arthritis bei sonstigen anderenorts klassifizierten Krankheiten: Mehrere Lokalisationen
M03.61	Reaktive Arthritis bei sonstigen anderenorts klassifizierten Krankheiten: Schulterregion
M03.62	Reaktive Arthritis bei sonstigen anderenorts klassifizierten Krankheiten: Oberarm
M03.63	Reaktive Arthritis bei sonstigen anderenorts klassifizierten Krankheiten: Unterarm
M03.64	Reaktive Arthritis bei sonstigen anderenorts klassifizierten Krankheiten: Hand
M03.65	Reaktive Arthritis bei sonstigen anderenorts klassifizierten Krankheiten: Beckenregion und Oberschenkel
M03.66	Reaktive Arthritis bei sonstigen anderenorts klassifizierten Krankheiten: Unterschenkel
M03.67	Reaktive Arthritis bei sonstigen anderenorts klassifizierten Krankheiten: Knöchel und Fuß
M03.68	Reaktive Arthritis bei sonstigen anderenorts klassifizierten Krankheiten: Sonstige
M03.69	Reaktive Arthritis bei sonstigen anderenorts klassifizierten Krankheiten: Nicht näher bezeichnete Lokalisation

Code	Beschreibung
M07.00	Distale interphalangeale Arthritis psoriatica {L40.5}: Mehrere Lokalisationen
M07.04	Distale interphalangeale Arthritis psoriatica {L40.5}: Hand
M07.07	Distale interphalangeale Arthritis psoriatica {L40.5}: Knöchel und Fuß
M07.09	Distale interphalangeale Arthritis psoriatica {L40.5}: Nicht näher bezeichnete Lokalisation
M07.10	Arthritis mutilans {L40.5}: Mehrere Lokalisationen
M07.11	Arthritis mutilans {L40.5}: Schulterregion
M07.12	Arthritis mutilans {L40.5}: Oberarm
M07.13	Arthritis mutilans {L40.5}: Unterarm
M07.14	Arthritis mutilans {L40.5}: Hand
M07.15	Arthritis mutilans {L40.5}: Beckenregion und Oberschenkel
M07.16	Arthritis mutilans {L40.5}: Unterschenkel
M07.17	Arthritis mutilans {L40.5}: Knöchel und Fuß
M07.18	Arthritis mutilans {L40.5}: Sonstige
M07.19	Arthritis mutilans {L40.5}: Nicht näher bezeichnete Lokalisation
M07.2	Spondylitis psoriatica {L40.5}
M07.30	Sonstige psoriatische Arthritiden {L40.5}: Mehrere Lokalisationen
M07.31	Sonstige psoriatische Arthritiden {L40.5}: Schulterregion
M07.32	Sonstige psoriatische Arthritiden {L40.5}: Oberarm
M07.33	Sonstige psoriatische Arthritiden {L40.5}: Unterarm
M07.34	Sonstige psoriatische Arthritiden {L40.5}: Hand
M07.35	Sonstige psoriatische Arthritiden {L40.5}: Beckenregion und Oberschenkel
M07.36	Sonstige psoriatische Arthritiden {L40.5}: Unterschenkel
M07.37	Sonstige psoriatische Arthritiden {L40.5}: Knöchel und Fuß
M07.38	Sonstige psoriatische Arthritiden {L40.5}: Sonstige
M07.39	Sonstige psoriatische Arthritiden {L40.5}: Nicht näher bezeichnete Lokalisation
M07.40	Arthritis bei Crohn-Krankheit [Enteritis regionalis] {K50.-}: Mehrere Lokalisationen
M07.41	Arthritis bei Crohn-Krankheit [Enteritis regionalis] {K50.-}: Schulterregion
M07.42	Arthritis bei Crohn-Krankheit [Enteritis regionalis] {K50.-}: Oberarm
M07.43	Arthritis bei Crohn-Krankheit [Enteritis regionalis] {K50.-}: Unterarm
M07.44	Arthritis bei Crohn-Krankheit [Enteritis regionalis] {K50.-}: Hand
M07.45	Arthritis bei Crohn-Krankheit [Enteritis regionalis] {K50.-}: Beckenregion und Oberschenkel
M07.46	Arthritis bei Crohn-Krankheit [Enteritis regionalis] {K50.-}: Unterschenkel
M07.47	Arthritis bei Crohn-Krankheit [Enteritis regionalis] {K50.-}: Knöchel und Fuß
M07.48	Arthritis bei Crohn-Krankheit [Enteritis regionalis] {K50.-}: Sonstige
M07.49	Arthritis bei Crohn-Krankheit [Enteritis regionalis] {K50.-}: Nicht näher bezeichnete Lokalisation
M07.50	Arthritis bei Colitis ulcerosa {K51.-}: Mehrere Lokalisationen
M07.51	Arthritis bei Colitis ulcerosa {K51.-}: Schulterregion
M07.52	Arthritis bei Colitis ulcerosa {K51.-}: Oberarm
M07.53	Arthritis bei Colitis ulcerosa {K51.-}: Unterarm
M07.54	Arthritis bei Colitis ulcerosa {K51.-}: Hand
M07.55	Arthritis bei Colitis ulcerosa {K51.-}: Beckenregion und Oberschenkel
M07.56	Arthritis bei Colitis ulcerosa {K51.-}: Unterschenkel
M07.57	Arthritis bei Colitis ulcerosa {K51.-}: Knöchel und Fuß
M07.58	Arthritis bei Colitis ulcerosa {K51.-}: Sonstige
M07.59	Arthritis bei Colitis ulcerosa {K51.-}: Nicht näher bezeichnete Lokalisation
M07.60	Sonstige Arthritiden bei gastrointestinalen Grundkrankheiten: Mehrere Lokalisationen
M07.61	Sonstige Arthritiden bei gastrointestinalen Grundkrankheiten: Schulterregion
M07.62	Sonstige Arthritiden bei gastrointestinalen Grundkrankheiten: Oberarm
M07.63	Sonstige Arthritiden bei gastrointestinalen Grundkrankheiten: Unterarm
M07.64	Sonstige Arthritiden bei gastrointestinalen Grundkrankheiten: Hand
M07.65	Sonstige Arthritiden bei gastrointestinalen Grundkrankheiten: Beckenregion und Oberschenkel
M07.66	Sonstige Arthritiden bei gastrointestinalen Grundkrankheiten: Unterschenkel
M07.67	Sonstige Arthritiden bei gastrointestinalen Grundkrankheiten: Knöchel und Fuß
M07.68	Sonstige Arthritiden bei gastrointestinalen Grundkrankheiten: Sonstige
M07.69	Sonstige Arthritiden bei gastrointestinalen Grundkrankheiten: Nicht näher bezeichnete Lokalisation
M09.00	Juvenile Arthritis bei Psoriasis {L40.5}: Mehrere Lokalisationen
M09.01	Juvenile Arthritis bei Psoriasis {L40.5}: Schulterregion
M09.02	Juvenile Arthritis bei Psoriasis {L40.5}: Oberarm
M09.03	Juvenile Arthritis bei Psoriasis {L40.5}: Unterarm
M09.04	Juvenile Arthritis bei Psoriasis {L40.5}: Hand
M09.05	Juvenile Arthritis bei Psoriasis {L40.5}: Beckenregion und Oberschenkel
M09.06	Juvenile Arthritis bei Psoriasis {L40.5}: Unterschenkel
M09.07	Juvenile Arthritis bei Psoriasis {L40.5}: Knöchel und Fuß
M09.08	Juvenile Arthritis bei Psoriasis {L40.5}: Sonstige
M09.09	Juvenile Arthritis bei Psoriasis {L40.5}: Nicht näher bezeichnete Lokalisation
M09.10	Juvenile Arthritis bei Crohn-Krankheit [Enteritis regionalis] {K50.-}: Mehrere Lokalisationen
M09.11	Juvenile Arthritis bei Crohn-Krankheit [Enteritis regionalis] {K50.-}: Schulterregion
M09.12	Juvenile Arthritis bei Crohn-Krankheit [Enteritis regionalis] {K50.-}: Oberarm
M09.13	Juvenile Arthritis bei Crohn-Krankheit [Enteritis regionalis] {K50.-}: Unterarm
M09.14	Juvenile Arthritis bei Crohn-Krankheit [Enteritis regionalis] {K50.-}: Hand
M09.15	Juvenile Arthritis bei Crohn-Krankheit [Enteritis regionalis] {K50.-}: Beckenregion und Oberschenkel
M09.16	Juvenile Arthritis bei Crohn-Krankheit [Enteritis regionalis] {K50.-}: Unterschenkel
M09.17	Juvenile Arthritis bei Crohn-Krankheit [Enteritis regionalis] {K50.-}: Knöchel und Fuß
M09.18	Juvenile Arthritis bei Crohn-Krankheit [Enteritis regionalis] {K50.-}: Sonstige
M09.19	Juvenile Arthritis bei Crohn-Krankheit [Enteritis regionalis] {K50.-}: Nicht näher bezeichnete Lokalisation
M09.20	Juvenile Arthritis bei Colitis ulcerosa {K51.-}: Mehrere Lokalisationen
M09.21	Juvenile Arthritis bei Colitis ulcerosa {K51.-}: Schulterregion
M09.22	Juvenile Arthritis bei Colitis ulcerosa {K51.-}: Oberarm
M09.23	Juvenile Arthritis bei Colitis ulcerosa {K51.-}: Unterarm
M09.24	Juvenile Arthritis bei Colitis ulcerosa {K51.-}: Hand

Code	Beschreibung
M09.25	Juvenile Arthritis bei Colitis ulcerosa {K51.-}: Beckenregion und Oberschenkel
M09.26	Juvenile Arthritis bei Colitis ulcerosa {K51.-}: Unterschenkel
M09.27	Juvenile Arthritis bei Colitis ulcerosa {K51.-}: Knöchel und Fuß
M09.28	Juvenile Arthritis bei Colitis ulcerosa {K51.-}: Sonstige
M09.29	Juvenile Arthritis bei Colitis ulcerosa {K51.-}: Nicht näher bezeichnete Lokalisation
M09.80	Juvenile Arthritis bei sonstigen anderenorts klassifizierten Krankheiten: Mehrere Lokalisationen
M09.81	Juvenile Arthritis bei sonstigen anderenorts klassifizierten Krankheiten: Schulterregion
M09.82	Juvenile Arthritis bei sonstigen anderenorts klassifizierten Krankheiten: Oberarm
M09.83	Juvenile Arthritis bei sonstigen anderenorts klassifizierten Krankheiten: Unterarm
M09.84	Juvenile Arthritis bei sonstigen anderenorts klassifizierten Krankheiten: Hand
M09.85	Juvenile Arthritis bei sonstigen anderenorts klassifizierten Krankheiten: Beckenregion und Oberschenkel
M09.86	Juvenile Arthritis bei sonstigen anderenorts klassifizierten Krankheiten: Unterschenkel
M09.87	Juvenile Arthritis bei sonstigen anderenorts klassifizierten Krankheiten: Knöchel und Fuß
M09.88	Juvenile Arthritis bei sonstigen anderenorts klassifizierten Krankheiten: Sonstige
M09.89	Juvenile Arthritis bei sonstigen anderenorts klassifizierten Krankheiten: Nicht näher bezeichnete Lokalisation
M14.00	Gicht-Arthropathie durch Enzymdefekte und sonstige angeborene Krankheiten: Mehrere Lokalisationen
M14.01	Gicht-Arthropathie durch Enzymdefekte und sonstige angeborene Krankheiten: Schulterregion
M14.02	Gicht-Arthropathie durch Enzymdefekte und sonstige angeborene Krankheiten: Oberarm
M14.03	Gicht-Arthropathie durch Enzymdefekte und sonstige angeborene Krankheiten: Unterarm
M14.04	Gicht-Arthropathie durch Enzymdefekte und sonstige angeborene Krankheiten: Hand
M14.05	Gicht-Arthropathie durch Enzymdefekte und sonstige angeborene Krankheiten: Beckenregion und Oberschenkel
M14.06	Gicht-Arthropathie durch Enzymdefekte und sonstige angeborene Krankheiten: Unterschenkel
M14.07	Gicht-Arthropathie durch Enzymdefekte und sonstige angeborene Krankheiten: Knöchel und Fuß
M14.08	Gicht-Arthropathie durch Enzymdefekte und sonstige angeborene Krankheiten: Sonstige
M14.09	Gicht-Arthropathie durch Enzymdefekte und sonstige angeborene Krankheiten: Nicht näher bezeichnete Lokalisation
M14.10	Kristall-Arthropathie bei sonstigen Stoffwechselstörungen: Mehrere Lokalisationen
M14.11	Kristall-Arthropathie bei sonstigen Stoffwechselstörungen: Schulterregion
M14.12	Kristall-Arthropathie bei sonstigen Stoffwechselstörungen: Oberarm
M14.13	Kristall-Arthropathie bei sonstigen Stoffwechselstörungen: Unterarm
M14.14	Kristall-Arthropathie bei sonstigen Stoffwechselstörungen: Hand
M14.15	Kristall-Arthropathie bei sonstigen Stoffwechselstörungen: Beckenregion und Oberschenkel
M14.16	Kristall-Arthropathie bei sonstigen Stoffwechselstörungen: Unterschenkel
M14.17	Kristall-Arthropathie bei sonstigen Stoffwechselstörungen: Knöchel und Fuß
M14.18	Kristall-Arthropathie bei sonstigen Stoffwechselstörungen: Sonstige
M14.19	Kristall-Arthropathie bei sonstigen Stoffwechselstörungen: Nicht näher bezeichnete Lokalisation
M14.20	Diabetische Arthropathie {E10-E14, vierte Stelle .6}: Mehrere Lokalisationen
M14.21	Diabetische Arthropathie {E10-E14, vierte Stelle .6}: Schulterregion
M14.22	Diabetische Arthropathie {E10-E14, vierte Stelle .6}: Oberarm
M14.23	Diabetische Arthropathie {E10-E14, vierte Stelle .6}: Unterarm
M14.24	Diabetische Arthropathie {E10-E14, vierte Stelle .6}: Hand
M14.25	Diabetische Arthropathie {E10-E14, vierte Stelle .6}: Beckenregion und Oberschenkel
M14.26	Diabetische Arthropathie {E10-E14, vierte Stelle .6}: Unterschenkel
M14.27	Diabetische Arthropathie {E10-E14, vierte Stelle .6}: Knöchel und Fuß
M14.28	Diabetische Arthropathie {E10-E14, vierte Stelle .6}: Sonstige
M14.29	Diabetische Arthropathie {E10-E14, vierte Stelle .6}: Nicht näher bezeichnete Lokalisation
M14.30	Multizentrische Retikulohistiozytose {E78.8}: Mehrere Lokalisationen
M14.31	Multizentrische Retikulohistiozytose {E78.8}: Schulterregion
M14.32	Multizentrische Retikulohistiozytose {E78.8}: Oberarm
M14.33	Multizentrische Retikulohistiozytose {E78.8}: Unterarm
M14.34	Multizentrische Retikulohistiozytose {E78.8}: Hand
M14.35	Multizentrische Retikulohistiozytose {E78.8}: Beckenregion und Oberschenkel
M14.36	Multizentrische Retikulohistiozytose {E78.8}: Unterschenkel
M14.37	Multizentrische Retikulohistiozytose {E78.8}: Knöchel und Fuß
M14.38	Multizentrische Retikulohistiozytose {E78.8}: Sonstige
M14.39	Multizentrische Retikulohistiozytose {E78.8}: Nicht näher bezeichnete Lokalisation
M14.40	Arthropathie bei Amyloidose {E85.-}: Mehrere Lokalisationen
M14.41	Arthropathie bei Amyloidose {E85.-}: Schulterregion
M14.42	Arthropathie bei Amyloidose {E85.-}: Oberarm
M14.43	Arthropathie bei Amyloidose {E85.-}: Unterarm
M14.44	Arthropathie bei Amyloidose {E85.-}: Hand
M14.45	Arthropathie bei Amyloidose {E85.-}: Beckenregion und Oberschenkel
M14.46	Arthropathie bei Amyloidose {E85.-}: Unterschenkel
M14.47	Arthropathie bei Amyloidose {E85.-}: Knöchel und Fuß
M14.48	Arthropathie bei Amyloidose {E85.-}: Sonstige
M14.49	Arthropathie bei Amyloidose {E85.-}: Nicht näher bezeichnete Lokalisation
M14.50	Arthropathien bei sonstigen endokrinen, Ernährungs- und Stoffwechselkrankheiten: Mehrere Lokalisationen
M14.51	Arthropathien bei sonstigen endokrinen, Ernährungs- und Stoffwechselkrankheiten: Schulterregion
M14.52	Arthropathien bei sonstigen endokrinen, Ernährungs- und Stoffwechselkrankheiten: Oberarm
M14.53	Arthropathien bei sonstigen endokrinen, Ernährungs- und Stoffwechselkrankheiten: Unterarm

PDX

Code	Beschreibung
M14.54	Arthropathien bei sonstigen endokrinen, Ernährungs- und Stoffwechselkrankheiten: Hand
M14.55	Arthropathien bei sonstigen endokrinen, Ernährungs- und Stoffwechselkrankheiten: Beckenregion und Oberschenkel
M14.56	Arthropathien bei sonstigen endokrinen, Ernährungs- und Stoffwechselkrankheiten: Unterschenkel
M14.57	Arthropathien bei sonstigen endokrinen, Ernährungs- und Stoffwechselkrankheiten: Knöchel und Fuß
M14.58	Arthropathien bei sonstigen endokrinen, Ernährungs- und Stoffwechselkrankheiten: Sonstige
M14.59	Arthropathien bei sonstigen endokrinen, Ernährungs- und Stoffwechselkrankheiten: Nicht näher bezeichnete Lokalisation
M14.60	Neuropathische Arthropathie: Mehrere Lokalisationen
M14.61	Neuropathische Arthropathie: Schulterregion
M14.62	Neuropathische Arthropathie: Oberarm
M14.63	Neuropathische Arthropathie: Unterarm
M14.64	Neuropathische Arthropathie: Hand
M14.65	Neuropathische Arthropathie: Beckenregion und Oberschenkel
M14.66	Neuropathische Arthropathie: Unterschenkel
M14.67	Neuropathische Arthropathie: Knöchel und Fuß
M14.68	Neuropathische Arthropathie: Sonstige
M14.69	Neuropathische Arthropathie: Nicht näher bezeichnete Lokalisation
M14.80	Arthropathien bei sonstigen näher bezeichneten, anderenorts klassifizierten Krankheiten: Mehrere Lokalisationen
M14.81	Arthropathien bei sonstigen näher bezeichneten, anderenorts klassifizierten Krankheiten: Schulterregion
M14.82	Arthropathien bei sonstigen näher bezeichneten, anderenorts klassifizierten Krankheiten: Oberarm
M14.83	Arthropathien bei sonstigen näher bezeichneten, anderenorts klassifizierten Krankheiten: Unterarm
M14.84	Arthropathien bei sonstigen näher bezeichneten, anderenorts klassifizierten Krankheiten: Hand
M14.85	Arthropathien bei sonstigen näher bezeichneten, anderenorts klassifizierten Krankheiten: Beckenregion und Oberschenkel
M14.86	Arthropathien bei sonstigen näher bezeichneten, anderenorts klassifizierten Krankheiten: Unterschenkel
M14.87	Arthropathien bei sonstigen näher bezeichneten, anderenorts klassifizierten Krankheiten: Knöchel und Fuß
M14.88	Arthropathien bei sonstigen näher bezeichneten, anderenorts klassifizierten Krankheiten: Sonstige
M14.89	Arthropathien bei sonstigen näher bezeichneten, anderenorts klassifizierten Krankheiten: Nicht näher bezeichnete Lokalisation
M36.0	Dermatomyositis-Polymyositis bei Neubildungen {C00-D48}
M36.1	Arthropathie bei Neubildungen {C00-D48}
M36.2	Arthropathia haemophilica {D66-D68}
M36.3	Arthropathie bei sonstigen anderenorts klassifizierten Blutkrankheiten {D50-D76}
M36.4	Arthropathie bei anderenorts klassifizierten Hypersensitivitätsreaktionen
M36.51	Stadium 1 der chronischen Bindegewebe-Graft-versus-Host-Krankheit {T86.05}, {T86.06}
M36.52	Stadium 2 der chronischen Bindegewebe-Graft-versus-Host-Krankheit {T86.06}
M36.53	Stadium 3 der chronischen Bindegewebe-Graft-versus-Host-Krankheit {T86.07}

Code	Beschreibung
M36.8	Systemkrankheiten des Bindegewebes bei sonstigen anderenorts klassifizierten Krankheiten
M49.00	Tuberkulose der Wirbelsäule {A18.0}: Mehrere Lokalisationen der Wirbelsäule
M49.01	Tuberkulose der Wirbelsäule {A18.0}: Okzipito-Atlanto-Axialbereich
M49.02	Tuberkulose der Wirbelsäule {A18.0}: Zervikalbereich
M49.03	Tuberkulose der Wirbelsäule {A18.0}: Zervikothorakalbereich
M49.04	Tuberkulose der Wirbelsäule {A18.0}: Thorakalbereich
M49.05	Tuberkulose der Wirbelsäule {A18.0}: Thorakolumbalbereich
M49.06	Tuberkulose der Wirbelsäule {A18.0}: Lumbalbereich
M49.07	Tuberkulose der Wirbelsäule {A18.0}: Lumbosakralbereich
M49.08	Tuberkulose der Wirbelsäule {A18.0}: Sakral- und Sakrokokzygealbereich
M49.09	Tuberkulose der Wirbelsäule {A18.0}: Nicht näher bezeichnete Lokalisation
M49.10	Spondylitis brucellosa {A23.-}: Mehrere Lokalisationen der Wirbelsäule
M49.11	Spondylitis brucellosa {A23.-}: Okzipito-Atlanto-Axialbereich
M49.12	Spondylitis brucellosa {A23.-}: Zervikalbereich
M49.13	Spondylitis brucellosa {A23.-}: Zervikothorakalbereich
M49.14	Spondylitis brucellosa {A23.-}: Thorakalbereich
M49.15	Spondylitis brucellosa {A23.-}: Thorakolumbalbereich
M49.16	Spondylitis brucellosa {A23.-}: Lumbalbereich
M49.17	Spondylitis brucellosa {A23.-}: Lumbosakralbereich
M49.18	Spondylitis brucellosa {A23.-}: Sakral- und Sakrokokzygealbereich
M49.19	Spondylitis brucellosa {A23.-}: Nicht näher bezeichnete Lokalisation
M49.20	Spondylitis durch bakterielle Darminfektion {A01-A04}: Mehrere Lokalisationen der Wirbelsäule
M49.21	Spondylitis durch bakterielle Darminfektion {A01-A04}: Okzipito-Atlanto-Axialbereich
M49.22	Spondylitis durch bakterielle Darminfektion {A01-A04}: Zervikalbereich
M49.23	Spondylitis durch bakterielle Darminfektion {A01-A04}: Zervikothorakalbereich
M49.24	Spondylitis durch bakterielle Darminfektion {A01-A04}: Thorakalbereich
M49.25	Spondylitis durch bakterielle Darminfektion {A01-A04}: Thorakolumbalbereich
M49.26	Spondylitis durch bakterielle Darminfektion {A01-A04}: Lumbalbereich
M49.27	Spondylitis durch bakterielle Darminfektion {A01-A04}: Lumbosakralbereich
M49.28	Spondylitis durch bakterielle Darminfektion {A01-A04}: Sakral- und Sakrokokzygealbereich
M49.29	Spondylitis durch bakterielle Darminfektion {A01-A04}: Nicht näher bezeichnete Lokalisation
M49.30	Spondylopathie bei sonstigen anderenorts klassifizierten infektiösen und parasitären Krankheiten: Mehrere Lokalisationen der Wirbelsäule
M49.31	Spondylopathie bei sonstigen anderenorts klassifizierten infektiösen und parasitären Krankheiten: Okzipito-Atlanto-Axialbereich
M49.32	Spondylopathie bei sonstigen anderenorts klassifizierten infektiösen und parasitären Krankheiten: Zervikalbereich
M49.33	Spondylopathie bei sonstigen anderenorts klassifizierten infektiösen und parasitären Krankheiten: Zervikothorakalbereich

Code	Beschreibung
M49.34	Spondylopathie bei sonstigen anderenorts klassifizierten infektiösen und parasitären Krankheiten: Thorakalbereich
M49.35	Spondylopathie bei sonstigen anderenorts klassifizierten infektiösen und parasitären Krankheiten: Thorakolumbalbereich
M49.36	Spondylopathie bei sonstigen anderenorts klassifizierten infektiösen und parasitären Krankheiten: Lumbalbereich
M49.37	Spondylopathie bei sonstigen anderenorts klassifizierten infektiösen und parasitären Krankheiten: Lumbosakralbereich
M49.38	Spondylopathie bei sonstigen anderenorts klassifizierten infektiösen und parasitären Krankheiten: Sakral- und Sakrokokzygealbereich
M49.39	Spondylopathie bei sonstigen anderenorts klassifizierten infektiösen und parasitären Krankheiten: Nicht näher bezeichnete Lokalisation
M49.40	Neuropathische Spondylopathie: Mehrere Lokalisationen der Wirbelsäule
M49.41	Neuropathische Spondylopathie: Okzipito-Atlanto-Axialbereich
M49.42	Neuropathische Spondylopathie: Zervikalbereich
M49.43	Neuropathische Spondylopathie: Zervikothorakalbereich
M49.44	Neuropathische Spondylopathie: Thorakalbereich
M49.45	Neuropathische Spondylopathie: Thorakolumbalbereich
M49.46	Neuropathische Spondylopathie: Lumbalbereich
M49.47	Neuropathische Spondylopathie: Lumbosakralbereich
M49.48	Neuropathische Spondylopathie: Sakral- und Sakrokokzygealbereich
M49.49	Neuropathische Spondylopathie: Nicht näher bezeichnete Lokalisation
M49.50	Wirbelkörperkompression bei anderenorts klassifizierten Krankheiten: Mehrere Lokalisationen der Wirbelsäule
M49.51	Wirbelkörperkompression bei anderenorts klassifizierten Krankheiten: Okzipito-Atlanto-Axialbereich
M49.52	Wirbelkörperkompression bei anderenorts klassifizierten Krankheiten: Zervikalbereich
M49.53	Wirbelkörperkompression bei anderenorts klassifizierten Krankheiten: Zervikothorakalbereich
M49.54	Wirbelkörperkompression bei anderenorts klassifizierten Krankheiten: Thorakalbereich
M49.55	Wirbelkörperkompression bei anderenorts klassifizierten Krankheiten: Thorakolumbalbereich
M49.56	Wirbelkörperkompression bei anderenorts klassifizierten Krankheiten: Lumbalbereich
M49.57	Wirbelkörperkompression bei anderenorts klassifizierten Krankheiten: Lumbosakralbereich
M49.58	Wirbelkörperkompression bei anderenorts klassifizierten Krankheiten: Sakral- und Sakrokokzygealbereich
M49.59	Wirbelkörperkompression bei anderenorts klassifizierten Krankheiten: Nicht näher bezeichnete Lokalisation
M49.80	Spondylopathie bei sonstigen anderenorts klassifizierten Krankheiten: Mehrere Lokalisationen der Wirbelsäule
M49.81	Spondylopathie bei sonstigen anderenorts klassifizierten Krankheiten: Okzipito-Atlanto-Axialbereich
M49.82	Spondylopathie bei sonstigen anderenorts klassifizierten Krankheiten: Zervikalbereich
M49.83	Spondylopathie bei sonstigen anderenorts klassifizierten Krankheiten: Zervikothorakalbereich
M49.84	Spondylopathie bei sonstigen anderenorts klassifizierten Krankheiten: Thorakalbereich
M49.85	Spondylopathie bei sonstigen anderenorts klassifizierten Krankheiten: Thorakolumbalbereich
M49.86	Spondylopathie bei sonstigen anderenorts klassifizierten Krankheiten: Lumbalbereich
M49.87	Spondylopathie bei sonstigen anderenorts klassifizierten Krankheiten: Lumbosakralbereich
M49.88	Spondylopathie bei sonstigen anderenorts klassifizierten Krankheiten: Sakral- und Sakrokokzygealbereich
M49.89	Spondylopathie bei sonstigen anderenorts klassifizierten Krankheiten: Nicht näher bezeichnete Lokalisation
M63.00	Myositis bei anderenorts klassifizierten bakteriellen Krankheiten: Mehrere Lokalisationen
M63.01	Myositis bei anderenorts klassifizierten bakteriellen Krankheiten: Schulterregion
M63.02	Myositis bei anderenorts klassifizierten bakteriellen Krankheiten: Oberarm
M63.03	Myositis bei anderenorts klassifizierten bakteriellen Krankheiten: Unterarm
M63.04	Myositis bei anderenorts klassifizierten bakteriellen Krankheiten: Hand
M63.05	Myositis bei anderenorts klassifizierten bakteriellen Krankheiten: Beckenregion und Oberschenkel
M63.06	Myositis bei anderenorts klassifizierten bakteriellen Krankheiten: Unterschenkel
M63.07	Myositis bei anderenorts klassifizierten bakteriellen Krankheiten: Knöchel und Fuß
M63.08	Myositis bei anderenorts klassifizierten bakteriellen Krankheiten: Sonstige
M63.09	Myositis bei anderenorts klassifizierten bakteriellen Krankheiten: Nicht näher bezeichnete Lokalisation
M63.10	Myositis bei anderenorts klassifizierten Protozoen- und Parasiteninfektionen: Mehrere Lokalisationen
M63.11	Myositis bei anderenorts klassifizierten Protozoen- und Parasiteninfektionen: Schulterregion
M63.12	Myositis bei anderenorts klassifizierten Protozoen- und Parasiteninfektionen: Oberarm
M63.13	Myositis bei anderenorts klassifizierten Protozoen- und Parasiteninfektionen: Unterarm
M63.14	Myositis bei anderenorts klassifizierten Protozoen- und Parasiteninfektionen: Hand
M63.15	Myositis bei anderenorts klassifizierten Protozoen- und Parasiteninfektionen: Beckenregion und Oberschenkel
M63.16	Myositis bei anderenorts klassifizierten Protozoen- und Parasiteninfektionen: Unterschenkel
M63.17	Myositis bei anderenorts klassifizierten Protozoen- und Parasiteninfektionen: Knöchel und Fuß
M63.18	Myositis bei anderenorts klassifizierten Protozoen- und Parasiteninfektionen: Sonstige
M63.19	Myositis bei anderenorts klassifizierten Protozoen- und Parasiteninfektionen: Nicht näher bezeichnete Lokalisation
M63.20	Myositis bei sonstigen anderenorts klassifizierten Infektionskrankheiten: Mehrere Lokalisationen
M63.21	Myositis bei sonstigen anderenorts klassifizierten Infektionskrankheiten: Schulterregion
M63.22	Myositis bei sonstigen anderenorts klassifizierten Infektionskrankheiten: Oberarm
M63.23	Myositis bei sonstigen anderenorts klassifizierten Infektionskrankheiten: Unterarm
M63.24	Myositis bei sonstigen anderenorts klassifizierten Infektionskrankheiten: Hand
M63.25	Myositis bei sonstigen anderenorts klassifizierten Infektionskrankheiten: Beckenregion und Oberschenkel

PDX

Code	Beschreibung
M63.26	Myositis bei sonstigen anderenorts klassifizierten Infektionskrankheiten: Unterschenkel
M63.27	Myositis bei sonstigen anderenorts klassifizierten Infektionskrankheiten: Knöchel und Fuß
M63.28	Myositis bei sonstigen anderenorts klassifizierten Infektionskrankheiten: Sonstige
M63.29	Myositis bei sonstigen anderenorts klassifizierten Infektionskrankheiten: Nicht näher bezeichnete Lokalisation
M63.30	Myositis bei Sarkoidose {D86.8}: Mehrere Lokalisationen
M63.31	Myositis bei Sarkoidose {D86.8}: Schulterregion
M63.32	Myositis bei Sarkoidose {D86.8}: Oberarm
M63.33	Myositis bei Sarkoidose {D86.8}: Unterarm
M63.34	Myositis bei Sarkoidose {D86.8}: Hand
M63.35	Myositis bei Sarkoidose {D86.8}: Beckenregion und Oberschenkel
M63.36	Myositis bei Sarkoidose {D86.8}: Unterschenkel
M63.37	Myositis bei Sarkoidose {D86.8}: Knöchel und Fuß
M63.38	Myositis bei Sarkoidose {D86.8}: Sonstige
M63.39	Myositis bei Sarkoidose {D86.8}: Nicht näher bezeichnete Lokalisation
M63.80	Sonstige Muskelkrankheiten bei anderenorts klassifizierten Krankheiten: Mehrere Lokalisationen
M63.81	Sonstige Muskelkrankheiten bei anderenorts klassifizierten Krankheiten: Schulterregion
M63.82	Sonstige Muskelkrankheiten bei anderenorts klassifizierten Krankheiten: Oberarm
M63.83	Sonstige Muskelkrankheiten bei anderenorts klassifizierten Krankheiten: Unterarm
M63.84	Sonstige Muskelkrankheiten bei anderenorts klassifizierten Krankheiten: Hand
M63.85	Sonstige Muskelkrankheiten bei anderenorts klassifizierten Krankheiten: Beckenregion und Oberschenkel
M63.86	Sonstige Muskelkrankheiten bei anderenorts klassifizierten Krankheiten: Unterschenkel
M63.87	Sonstige Muskelkrankheiten bei anderenorts klassifizierten Krankheiten: Knöchel und Fuß
M63.88	Sonstige Muskelkrankheiten bei anderenorts klassifizierten Krankheiten: Sonstige
M63.89	Sonstige Muskelkrankheiten bei anderenorts klassifizierten Krankheiten: Nicht näher bezeichnete Lokalisation
M68.00	Synovitis und Tenosynovitis bei anderenorts klassifizierten bakteriellen Krankheiten: Mehrere Lokalisationen
M68.01	Synovitis und Tenosynovitis bei anderenorts klassifizierten bakteriellen Krankheiten: Schulterregion
M68.02	Synovitis und Tenosynovitis bei anderenorts klassifizierten bakteriellen Krankheiten: Oberarm
M68.03	Synovitis und Tenosynovitis bei anderenorts klassifizierten bakteriellen Krankheiten: Unterarm
M68.04	Synovitis und Tenosynovitis bei anderenorts klassifizierten bakteriellen Krankheiten: Hand
M68.05	Synovitis und Tenosynovitis bei anderenorts klassifizierten bakteriellen Krankheiten: Beckenregion und Oberschenkel
M68.06	Synovitis und Tenosynovitis bei anderenorts klassifizierten bakteriellen Krankheiten: Unterschenkel
M68.07	Synovitis und Tenosynovitis bei anderenorts klassifizierten bakteriellen Krankheiten: Knöchel und Fuß
M68.08	Synovitis und Tenosynovitis bei anderenorts klassifizierten bakteriellen Krankheiten: Sonstige
M68.09	Synovitis und Tenosynovitis bei anderenorts klassifizierten bakteriellen Krankheiten: Nicht näher bezeichnete Lokalisation

Code	Beschreibung
M68.80	Sonstige Krankheiten der Synovialis und der Sehnen bei anderenorts klassifizierten Krankheiten: Mehrere Lokalisationen
M68.81	Sonstige Krankheiten der Synovialis und der Sehnen bei anderenorts klassifizierten Krankheiten: Schulterregion
M68.82	Sonstige Krankheiten der Synovialis und der Sehnen bei anderenorts klassifizierten Krankheiten: Oberarm
M68.83	Sonstige Krankheiten der Synovialis und der Sehnen bei anderenorts klassifizierten Krankheiten: Unterarm
M68.84	Sonstige Krankheiten der Synovialis und der Sehnen bei anderenorts klassifizierten Krankheiten: Hand
M68.85	Sonstige Krankheiten der Synovialis und der Sehnen bei anderenorts klassifizierten Krankheiten: Beckenregion und Oberschenkel
M68.86	Sonstige Krankheiten der Synovialis und der Sehnen bei anderenorts klassifizierten Krankheiten: Unterschenkel
M68.87	Sonstige Krankheiten der Synovialis und der Sehnen bei anderenorts klassifizierten Krankheiten: Knöchel und Fuß
M68.88	Sonstige Krankheiten der Synovialis und der Sehnen bei anderenorts klassifizierten Krankheiten: Sonstige
M68.89	Sonstige Krankheiten der Synovialis und der Sehnen bei anderenorts klassifizierten Krankheiten: Nicht näher bezeichnete Lokalisation
M73.00	Bursitis gonorrhoica {A54.4}: Mehrere Lokalisationen
M73.01	Bursitis gonorrhoica {A54.4}: Schulterregion
M73.02	Bursitis gonorrhoica {A54.4}: Oberarm
M73.03	Bursitis gonorrhoica {A54.4}: Unterarm
M73.04	Bursitis gonorrhoica {A54.4}: Hand
M73.05	Bursitis gonorrhoica {A54.4}: Beckenregion und Oberschenkel
M73.06	Bursitis gonorrhoica {A54.4}: Unterschenkel
M73.07	Bursitis gonorrhoica {A54.4}: Knöchel und Fuß
M73.08	Bursitis gonorrhoica {A54.4}: Sonstige
M73.09	Bursitis gonorrhoica {A54.4}: Nicht näher bezeichnete Lokalisation
M73.10	Bursitis syphilitica {A52.7}: Mehrere Lokalisationen
M73.11	Bursitis syphilitica {A52.7}: Schulterregion
M73.12	Bursitis syphilitica {A52.7}: Oberarm
M73.13	Bursitis syphilitica {A52.7}: Unterarm
M73.14	Bursitis syphilitica {A52.7}: Hand
M73.15	Bursitis syphilitica {A52.7}: Beckenregion und Oberschenkel
M73.16	Bursitis syphilitica {A52.7}: Unterschenkel
M73.17	Bursitis syphilitica {A52.7}: Knöchel und Fuß
M73.18	Bursitis syphilitica {A52.7}: Sonstige
M73.19	Bursitis syphilitica {A52.7}: Nicht näher bezeichnete Lokalisation
M73.80	Sonstige Krankheiten des Weichteilgewebes bei sonstigen anderenorts klassifizierten Krankheiten: Mehrere Lokalisationen
M73.81	Sonstige Krankheiten des Weichteilgewebes bei sonstigen anderenorts klassifizierten Krankheiten: Schulterregion
M73.82	Sonstige Krankheiten des Weichteilgewebes bei sonstigen anderenorts klassifizierten Krankheiten: Oberarm
M73.83	Sonstige Krankheiten des Weichteilgewebes bei sonstigen anderenorts klassifizierten Krankheiten: Unterarm
M73.84	Sonstige Krankheiten des Weichteilgewebes bei sonstigen anderenorts klassifizierten Krankheiten: Hand
M73.85	Sonstige Krankheiten des Weichteilgewebes bei sonstigen anderenorts klassifizierten Krankheiten: Beckenregion und Oberschenkel

Code	Beschreibung
M73.86	Sonstige Krankheiten des Weichteilgewebes bei sonstigen anderenorts klassifizierten Krankheiten: Unterschenkel
M73.87	Sonstige Krankheiten des Weichteilgewebes bei sonstigen anderenorts klassifizierten Krankheiten: Knöchel und Fuß
M73.88	Sonstige Krankheiten des Weichteilgewebes bei sonstigen anderenorts klassifizierten Krankheiten: Sonstige
M73.89	Sonstige Krankheiten des Weichteilgewebes bei sonstigen anderenorts klassifizierten Krankheiten: Nicht näher bezeichnete Lokalisation
M82.00	Osteoporose bei Plasmozytom {C90.0-}: Mehrere Lokalisationen
M82.01	Osteoporose bei Plasmozytom {C90.0-}: Schulterregion
M82.02	Osteoporose bei Plasmozytom {C90.0-}: Oberarm
M82.03	Osteoporose bei Plasmozytom {C90.0-}: Unterarm
M82.04	Osteoporose bei Plasmozytom {C90.0-}: Hand
M82.05	Osteoporose bei Plasmozytom {C90.0-}: Beckenregion und Oberschenkel
M82.06	Osteoporose bei Plasmozytom {C90.0-}: Unterschenkel
M82.07	Osteoporose bei Plasmozytom {C90.0-}: Knöchel und Fuß
M82.08	Osteoporose bei Plasmozytom {C90.0-}: Sonstige
M82.09	Osteoporose bei Plasmozytom {C90.0-}: Nicht näher bezeichnete Lokalisation
M82.10	Osteoporose bei endokrinen Störungen {E00-E34}: Mehrere Lokalisationen
M82.11	Osteoporose bei endokrinen Störungen {E00-E34}: Schulterregion
M82.12	Osteoporose bei endokrinen Störungen {E00-E34}: Oberarm
M82.13	Osteoporose bei endokrinen Störungen {E00-E34}: Unterarm
M82.14	Osteoporose bei endokrinen Störungen {E00-E34}: Hand
M82.15	Osteoporose bei endokrinen Störungen {E00-E34}: Beckenregion und Oberschenkel
M82.16	Osteoporose bei endokrinen Störungen {E00-E34}: Unterschenkel
M82.17	Osteoporose bei endokrinen Störungen {E00-E34}: Knöchel und Fuß
M82.18	Osteoporose bei endokrinen Störungen {E00-E34}: Sonstige
M82.19	Osteoporose bei endokrinen Störungen {E00-E34}: Nicht näher bezeichnete Lokalisation
M82.80	Osteoporose bei sonstigen anderenorts klassifizierten Krankheiten: Mehrere Lokalisationen
M82.81	Osteoporose bei sonstigen anderenorts klassifizierten Krankheiten: Schulterregion
M82.82	Osteoporose bei sonstigen anderenorts klassifizierten Krankheiten: Oberarm
M82.83	Osteoporose bei sonstigen anderenorts klassifizierten Krankheiten: Unterarm
M82.84	Osteoporose bei sonstigen anderenorts klassifizierten Krankheiten: Hand
M82.85	Osteoporose bei sonstigen anderenorts klassifizierten Krankheiten: Beckenregion und Oberschenkel
M82.86	Osteoporose bei sonstigen anderenorts klassifizierten Krankheiten: Unterschenkel
M82.87	Osteoporose bei sonstigen anderenorts klassifizierten Krankheiten: Knöchel und Fuß
M82.88	Osteoporose bei sonstigen anderenorts klassifizierten Krankheiten: Sonstige
M82.89	Osteoporose bei sonstigen anderenorts klassifizierten Krankheiten: Nicht näher bezeichnete Lokalisation

Code	Beschreibung
M90.00	Knochentuberkulose {A18.0}: Mehrere Lokalisationen
M90.01	Knochentuberkulose {A18.0}: Schulterregion
M90.02	Knochentuberkulose {A18.0}: Oberarm
M90.03	Knochentuberkulose {A18.0}: Unterarm
M90.04	Knochentuberkulose {A18.0}: Hand
M90.05	Knochentuberkulose {A18.0}: Beckenregion und Oberschenkel
M90.06	Knochentuberkulose {A18.0}: Unterschenkel
M90.07	Knochentuberkulose {A18.0}: Knöchel und Fuß
M90.08	Knochentuberkulose {A18.0}: Sonstige
M90.09	Knochentuberkulose {A18.0}: Nicht näher bezeichnete Lokalisation
M90.10	Periostitis bei sonstigen anderenorts klassifizierten Infektionskrankheiten: Mehrere Lokalisationen
M90.11	Periostitis bei sonstigen anderenorts klassifizierten Infektionskrankheiten: Schulterregion
M90.12	Periostitis bei sonstigen anderenorts klassifizierten Infektionskrankheiten: Oberarm
M90.13	Periostitis bei sonstigen anderenorts klassifizierten Infektionskrankheiten: Unterarm
M90.14	Periostitis bei sonstigen anderenorts klassifizierten Infektionskrankheiten: Hand
M90.15	Periostitis bei sonstigen anderenorts klassifizierten Infektionskrankheiten: Beckenregion und Oberschenkel
M90.16	Periostitis bei sonstigen anderenorts klassifizierten Infektionskrankheiten: Unterschenkel
M90.17	Periostitis bei sonstigen anderenorts klassifizierten Infektionskrankheiten: Knöchel und Fuß
M90.18	Periostitis bei sonstigen anderenorts klassifizierten Infektionskrankheiten: Sonstige
M90.19	Periostitis bei sonstigen anderenorts klassifizierten Infektionskrankheiten: Nicht näher bezeichnete Lokalisation
M90.20	Osteopathie bei sonstigen anderenorts klassifizierten Infektionskrankheiten: Mehrere Lokalisationen
M90.21	Osteopathie bei sonstigen anderenorts klassifizierten Infektionskrankheiten: Schulterregion
M90.22	Osteopathie bei sonstigen anderenorts klassifizierten Infektionskrankheiten: Oberarm
M90.23	Osteopathie bei sonstigen anderenorts klassifizierten Infektionskrankheiten: Unterarm
M90.24	Osteopathie bei sonstigen anderenorts klassifizierten Infektionskrankheiten: Hand
M90.25	Osteopathie bei sonstigen anderenorts klassifizierten Infektionskrankheiten: Beckenregion und Oberschenkel
M90.26	Osteopathie bei sonstigen anderenorts klassifizierten Infektionskrankheiten: Unterschenkel
M90.27	Osteopathie bei sonstigen anderenorts klassifizierten Infektionskrankheiten: Knöchel und Fuß
M90.28	Osteopathie bei sonstigen anderenorts klassifizierten Infektionskrankheiten: Sonstige
M90.29	Osteopathie bei sonstigen anderenorts klassifizierten Infektionskrankheiten: Nicht näher bezeichnete Lokalisation
M90.30	Knochennekrose bei Caissonkrankheit {T70.3}: Mehrere Lokalisationen
M90.31	Knochennekrose bei Caissonkrankheit {T70.3}: Schulterregion
M90.32	Knochennekrose bei Caissonkrankheit {T70.3}: Oberarm
M90.33	Knochennekrose bei Caissonkrankheit {T70.3}: Unterarm
M90.34	Knochennekrose bei Caissonkrankheit {T70.3}: Hand
M90.35	Knochennekrose bei Caissonkrankheit {T70.3}: Beckenregion und Oberschenkel

PDX

Code	Beschreibung
M90.36	Knochennekrose bei Caissonkrankheit {T70.3}: Unterschenkel
M90.37	Knochennekrose bei Caissonkrankheit {T70.3}: Knöchel und Fuß
M90.38	Knochennekrose bei Caissonkrankheit {T70.3}: Sonstige
M90.39	Knochennekrose bei Caissonkrankheit {T70.3}: Nicht näher bezeichnete Lokalisation
M90.40	Knochennekrose durch Hämoglobinopathie {D50-D64}: Mehrere Lokalisationen
M90.41	Knochennekrose durch Hämoglobinopathie {D50-D64}: Schulterregion
M90.42	Knochennekrose durch Hämoglobinopathie {D50-D64}: Oberarm
M90.43	Knochennekrose durch Hämoglobinopathie {D50-D64}: Unterarm
M90.44	Knochennekrose durch Hämoglobinopathie {D50-D64}: Hand
M90.45	Knochennekrose durch Hämoglobinopathie {D50-D64}: Beckenregion und Oberschenkel
M90.46	Knochennekrose durch Hämoglobinopathie {D50-D64}: Unterschenkel
M90.47	Knochennekrose durch Hämoglobinopathie {D50-D64}: Knöchel und Fuß
M90.48	Knochennekrose durch Hämoglobinopathie {D50-D64}: Sonstige
M90.49	Knochennekrose durch Hämoglobinopathie {D50-D64}: Nicht näher bezeichnete Lokalisation
M90.50	Knochennekrose bei sonstigen anderenorts klassifizierten Krankheiten: Mehrere Lokalisationen
M90.51	Knochennekrose bei sonstigen anderenorts klassifizierten Krankheiten: Schulterregion
M90.52	Knochennekrose bei sonstigen anderenorts klassifizierten Krankheiten: Oberarm
M90.53	Knochennekrose bei sonstigen anderenorts klassifizierten Krankheiten: Unterarm
M90.54	Knochennekrose bei sonstigen anderenorts klassifizierten Krankheiten: Hand
M90.55	Knochennekrose bei sonstigen anderenorts klassifizierten Krankheiten: Beckenregion und Oberschenkel
M90.56	Knochennekrose bei sonstigen anderenorts klassifizierten Krankheiten: Unterschenkel
M90.57	Knochennekrose bei sonstigen anderenorts klassifizierten Krankheiten: Knöchel und Fuß
M90.58	Knochennekrose bei sonstigen anderenorts klassifizierten Krankheiten: Sonstige
M90.59	Knochennekrose bei sonstigen anderenorts klassifizierten Krankheiten: Nicht näher bezeichnete Lokalisation
M90.60	Osteodystrophia deformans bei Neubildungen {C00-D48}: Mehrere Lokalisationen
M90.61	Osteodystrophia deformans bei Neubildungen {C00-D48}: Schulterregion
M90.62	Osteodystrophia deformans bei Neubildungen {C00-D48}: Oberarm
M90.63	Osteodystrophia deformans bei Neubildungen {C00-D48}: Unterarm
M90.64	Osteodystrophia deformans bei Neubildungen {C00-D48}: Hand
M90.65	Osteodystrophia deformans bei Neubildungen {C00-D48}: Beckenregion und Oberschenkel
M90.66	Osteodystrophia deformans bei Neubildungen {C00-D48}: Unterschenkel
M90.67	Osteodystrophia deformans bei Neubildungen {C00-D48}: Knöchel und Fuß
M90.68	Osteodystrophia deformans bei Neubildungen {C00-D48}: Sonstige
M90.69	Osteodystrophia deformans bei Neubildungen {C00-D48}: Nicht näher bezeichnete Lokalisation

Code	Beschreibung
M90.70	Knochenfraktur bei Neubildungen {C00-D48}: Mehrere Lokalisationen
M90.71	Knochenfraktur bei Neubildungen {C00-D48}: Schulterregion
M90.72	Knochenfraktur bei Neubildungen {C00-D48}: Oberarm
M90.73	Knochenfraktur bei Neubildungen {C00-D48}: Unterarm
M90.74	Knochenfraktur bei Neubildungen {C00-D48}: Hand
M90.75	Knochenfraktur bei Neubildungen {C00-D48}: Beckenregion und Oberschenkel
M90.76	Knochenfraktur bei Neubildungen {C00-D48}: Unterschenkel
M90.77	Knochenfraktur bei Neubildungen {C00-D48}: Knöchel und Fuß
M90.78	Knochenfraktur bei Neubildungen {C00-D48}: Sonstige
M90.79	Knochenfraktur bei Neubildungen {C00-D48}: Nicht näher bezeichnete Lokalisation
M90.80	Osteopathie bei sonstigen anderenorts klassifizierten Krankheiten: Mehrere Lokalisationen
M90.81	Osteopathie bei sonstigen anderenorts klassifizierten Krankheiten: Schulterregion
M90.82	Osteopathie bei sonstigen anderenorts klassifizierten Krankheiten: Oberarm
M90.83	Osteopathie bei sonstigen anderenorts klassifizierten Krankheiten: Unterarm
M90.84	Osteopathie bei sonstigen anderenorts klassifizierten Krankheiten: Hand
M90.85	Osteopathie bei sonstigen anderenorts klassifizierten Krankheiten: Beckenregion und Oberschenkel
M90.86	Osteopathie bei sonstigen anderenorts klassifizierten Krankheiten: Unterschenkel
M90.87	Osteopathie bei sonstigen anderenorts klassifizierten Krankheiten: Knöchel und Fuß
M90.88	Osteopathie bei sonstigen anderenorts klassifizierten Krankheiten: Sonstige
M90.89	Osteopathie bei sonstigen anderenorts klassifizierten Krankheiten: Nicht näher bezeichnete Lokalisation
M99.00	Segmentale und somatische Funktionsstörungen: Kopfbereich
M99.01	Segmentale und somatische Funktionsstörungen: Zervikalbereich
M99.02	Segmentale und somatische Funktionsstörungen: Thorakalbereich
M99.03	Segmentale und somatische Funktionsstörungen: Lumbalbereich
M99.04	Segmentale und somatische Funktionsstörungen: Sakralbereich
M99.05	Segmentale und somatische Funktionsstörungen: Beckenbereich
M99.06	Segmentale und somatische Funktionsstörungen: Untere Extremität
M99.07	Segmentale und somatische Funktionsstörungen: Obere Extremität
M99.08	Segmentale und somatische Funktionsstörungen: Brustkorb
M99.09	Segmentale und somatische Funktionsstörungen: Abdomen und sonstige Lokalisationen
M99.10	Subluxation (der Wirbelsäule): Kopfbereich
M99.11	Subluxation (der Wirbelsäule): Zervikalbereich
M99.12	Subluxation (der Wirbelsäule): Thorakalbereich
M99.13	Subluxation (der Wirbelsäule): Lumbalbereich
M99.14	Subluxation (der Wirbelsäule): Sakralbereich
M99.19	Subluxation (der Wirbelsäule): Abdomen und sonstige Lokalisationen
M99.20	Subluxationsstenose des Spinalkanals: Kopfbereich

Code	Beschreibung
M99.21	Subluxationsstenose des Spinalkanals: Zervikalbereich
M99.22	Subluxationsstenose des Spinalkanals: Thorakalbereich
M99.23	Subluxationsstenose des Spinalkanals: Lumbalbereich
M99.24	Subluxationsstenose des Spinalkanals: Sakralbereich
M99.29	Subluxationsstenose des Spinalkanals: Abdomen und sonstige Lokalisationen
M99.80	Sonstige biomechanische Funktionsstörungen: Kopfbereich
M99.81	Sonstige biomechanische Funktionsstörungen: Zervikalbereich
M99.82	Sonstige biomechanische Funktionsstörungen: Thorakalbereich
M99.83	Sonstige biomechanische Funktionsstörungen: Lumbalbereich
M99.84	Sonstige biomechanische Funktionsstörungen: Sakralbereich
M99.85	Sonstige biomechanische Funktionsstörungen: Beckenbereich
M99.86	Sonstige biomechanische Funktionsstörungen: Untere Extremität
M99.87	Sonstige biomechanische Funktionsstörungen: Obere Extremität
M99.88	Sonstige biomechanische Funktionsstörungen: Brustkorb
M99.89	Sonstige biomechanische Funktionsstörungen: Abdomen und sonstige Lokalisationen
M99.90	Biomechanische Funktionsstörung, nicht näher bezeichnet: Kopfbereich
M99.91	Biomechanische Funktionsstörung, nicht näher bezeichnet: Zervikalbereich
M99.92	Biomechanische Funktionsstörung, nicht näher bezeichnet: Thorakalbereich
M99.93	Biomechanische Funktionsstörung, nicht näher bezeichnet: Lumbalbereich
M99.94	Biomechanische Funktionsstörung, nicht näher bezeichnet: Sakralbereich
M99.95	Biomechanische Funktionsstörung, nicht näher bezeichnet: Beckenbereich
M99.96	Biomechanische Funktionsstörung, nicht näher bezeichnet: Untere Extremität
M99.97	Biomechanische Funktionsstörung, nicht näher bezeichnet: Obere Extremität
M99.98	Biomechanische Funktionsstörung, nicht näher bezeichnet: Brustkorb
M99.99	Biomechanische Funktionsstörung, nicht näher bezeichnet: Abdomen und sonstige Lokalisationen
N08.0	Glomeruläre Krankheiten bei anderenorts klassifizierten infektiösen und parasitären Krankheiten
N08.1	Glomeruläre Krankheiten bei Neubildungen
N08.2	Glomeruläre Krankheiten bei Blutkrankheiten und Störungen mit Beteiligung des Immunsystems
N08.3	Glomeruläre Krankheiten bei Diabetes mellitus {E10-E14, vierte Stelle .2}
N08.4	Glomeruläre Krankheiten bei sonstigen endokrinen, Ernährungs- und Stoffwechselkrankheiten
N08.5	Glomeruläre Krankheiten bei Systemkrankheiten des Bindegewebes
N08.8	Glomeruläre Krankheiten bei sonstigen anderenorts klassifizierten Krankheiten
N16.0	Tubulointerstitielle Nierenkrankheiten bei anderenorts klassifizierten infektiösen und parasitären Krankheiten
N16.1	Tubulointerstitielle Nierenkrankheiten bei Neubildungen
N16.2	Tubulointerstitielle Nierenkrankheiten bei Blutkrankheiten und Störungen mit Beteiligung des Immunsystems
N16.3	Tubulointerstitielle Nierenkrankheiten bei Stoffwechselkrankheiten
N16.4	Tubulointerstitielle Nierenkrankheiten bei systemischen Krankheiten des Bindegewebes
N16.5	Tubulointerstitielle Nierenkrankheiten bei Transplantatabstoßung {T86.-}
N16.8	Tubulointerstitielle Nierenkrankheiten bei sonstigen anderenorts klassifizierten Krankheiten
N22.0	Harnstein bei Schistosomiasis [Bilharziose] {B65.0}
N22.8	Harnstein bei sonstigen anderenorts klassifizierten Krankheiten
N29.0	Spätsyphilis der Niere {A52.7}
N29.1	Sonstige Krankheiten der Niere und des Ureters bei anderenorts klassifizierten infektiösen und parasitären Krankheiten
N29.8	Sonstige Krankheiten der Niere und des Ureters bei sonstigen anderenorts klassifizierten Krankheiten
N33.0	Tuberkulöse Zystitis {A18.1}
N33.8	Krankheiten der Harnblase bei sonstigen anderenorts klassifizierten Krankheiten
N37.0	Urethritis bei anderenorts klassifizierten Krankheiten
N37.8	Sonstige Krankheiten der Harnröhre bei anderenorts klassifizierten Krankheiten
N51.0	Krankheiten der Prostata bei anderenorts klassifizierten Krankheiten
N51.1	Krankheiten des Hodens und des Nebenhodens bei anderenorts klassifizierten Krankheiten
N51.2	Balanitis bei anderenorts klassifizierten Krankheiten
N51.8	Sonstige Krankheiten der männlichen Genitalorgane bei anderenorts klassifizierten Krankheiten
N74.0	Tuberkulöse Infektion der Cervix uteri {A18.1}
N74.1	Tuberkulöse Entzündung im weiblichen Becken {A18.1}
N74.2	Syphilitische Entzündung im weiblichen Becken {A51.4}, {A52.7}
N74.3	Entzündung im weiblichen Becken durch Gonokokken {A54.2}
N74.4	Entzündung im weiblichen Becken durch Chlamydien {A56.1}
N74.8	Entzündung im weiblichen Becken bei sonstigen anderenorts klassifizierten Krankheiten
N77.0	Ulzeration der Vulva bei anderenorts klassifizierten infektiösen und parasitären Krankheiten
N77.1	Vaginitis, Vulvitis oder Vulvovaginitis bei anderenorts klassifizierten infektiösen und parasitären Krankheiten
N77.21	Stadium 1 der chronischen Vulvovaginal-Graft-versus-Host-Krankheit {T86.05}, {T86.06}
N77.22	Stadium 2 der chronischen Vulvovaginal-Graft-versus-Host-Krankheit {T86.06}
N77.23	Stadium 3 der chronischen Vulvovaginal-Graft-versus-Host-Krankheit {T86.07}
N77.8	Vulvovaginale Ulzeration und Entzündung bei sonstigen anderenorts klassifizierten Krankheiten
O09.0	Schwangerschaftsdauer: Weniger als 5 vollendete Wochen
O09.1	Schwangerschaftsdauer: 5 bis 13 vollendete Wochen
O09.2	Schwangerschaftsdauer: 14. Woche bis 19 vollendete Wochen
O09.3	Schwangerschaftsdauer: 20. Woche bis 25 vollendete Wochen
O09.4	Schwangerschaftsdauer: 26. Woche bis 33 vollendete Wochen
O09.5	Schwangerschaftsdauer: 34. Woche bis 36 vollendete Wochen

PDX

Code	Beschreibung
O09.6	Schwangerschaftsdauer: 37. Woche bis 41 vollendete Wochen
O09.7	Schwangerschaftsdauer: Mehr als 41 vollendete Wochen
O09.9	Schwangerschaftsdauer: Nicht näher bezeichnet
O47.9	Frustrane Kontraktionen, nicht näher bezeichnet
O94	Folgen von Komplikationen während Schwangerschaft, Geburt und Wochenbett
O95	Sterbefall während der Gestationsperiode nicht näher bezeichneter Ursache
O96.0	Tod infolge direkt gestationsbedingter Ursachen nach mehr als 42 Tagen bis unter einem Jahr nach der Entbindung
O96.1	Tod infolge indirekt gestationsbedingter Ursachen nach mehr als 42 Tagen bis unter einem Jahr nach der Entbindung
O96.9	Tod infolge nicht näher bezeichneter gestationsbedingter Ursachen nach mehr als 42 Tagen bis unter einem Jahr nach der Entbindung
O97.0	Tod an den Folgen direkt gestationsbedingter Ursachen
O97.1	Tod an den Folgen indirekt gestationsbedingter Ursachen
O97.9	Tod an den Folgen nicht näher bezeichneter gestationsbedingter Ursachen
P75	Mekoniumileus bei zystischer Fibrose {E84.1}
P95	Fetaltod nicht näher bezeichneter Ursache
P96.4	Schwangerschaftsabbruch als Ursache von Zuständen beim Fetus und Neugeborenem
Q87.0	Angeborene Fehlbildungssyndrome mit vorwiegender Beteiligung des Gesichtes
Q87.1	Angeborene Fehlbildungssyndrome, die vorwiegend mit Kleinwuchs einhergehen
Q87.2	Angeborene Fehlbildungssyndrome mit vorwiegender Beteiligung der Extremitäten
Q87.3	Angeborene Fehlbildungssyndrome mit vermehrtem Gewebewachstum im frühen Kindesalter
Q87.5	Sonstige angeborene Fehlbildungssyndrome mit sonstigen Skelettveränderungen
Q87.8	Sonstige näher bezeichnete angeborene Fehlbildungssyndrome, anderenorts nicht klassifiziert
R65.0	Systemisches inflammatorisches Response-Syndrom [SIRS] infektiöser Genese ohne Organkomplikationen
R65.1	Systemisches inflammatorisches Response-Syndrom [SIRS] infektiöser Genese mit Organkomplikationen
R65.2	Systemisches inflammatorisches Response-Syndrom [SIRS] nichtinfektiöser Genese ohne Organkomplikationen
R65.3	Systemisches inflammatorisches Response-Syndrom [SIRS] nichtinfektiöser Genese mit Organkomplikationen
R65.9	Systemisches inflammatorisches Response-Syndrom [SIRS], nicht näher bezeichnet
R69	Unbekannte und nicht näher bezeichnete Krankheitsursachen
R75	Laborhinweis auf Humanes Immundefizienz-Virus [HIV]
R78.0	Nachweis von Alkohol im Blut
R96.0	Plötzlich eingetretener Tod
R96.1	Todeseintritt innerhalb von weniger als 24 Stunden nach Beginn der Symptome, ohne anderweitige Angabe
R98	Tod ohne Anwesenheit anderer Personen
R99	Sonstige ungenau oder nicht näher bezeichnete Todesursachen
S01.83	Offene Wunde (jeder Teil des Kopfes) mit Verbindung zu einer intrakraniellen Verletzung

Code	Beschreibung
S01.84	Weichteilschaden I. Grades bei geschlossener Fraktur oder Luxation des Kopfes
S01.85	Weichteilschaden II. Grades bei geschlossener Fraktur oder Luxation des Kopfes
S01.86	Weichteilschaden III. Grades bei geschlossener Fraktur oder Luxation des Kopfes
S01.87	Weichteilschaden I. Grades bei offener Fraktur oder Luxation des Kopfes
S01.88	Weichteilschaden II. Grades bei offener Fraktur oder Luxation des Kopfes
S01.89	Weichteilschaden III. Grades bei offener Fraktur oder Luxation des Kopfes
S06.70	Bewusstlosigkeit bei Schädel-Hirn-Trauma: Weniger als 30 Minuten
S06.71	Bewusstlosigkeit bei Schädel-Hirn-Trauma: 30 Minuten bis 24 Stunden
S06.72	Bewusstlosigkeit bei Schädel-Hirn-Trauma: Mehr als 24 Stunden, mit Rückkehr zum vorher bestehenden Bewusstseinsgrad
S06.73	Bewusstlosigkeit bei Schädel-Hirn-Trauma: Mehr als 24 Stunden, ohne Rückkehr zum vorher bestehenden Bewusstseinsgrad
S06.79	Bewusstlosigkeit bei Schädel-Hirn-Trauma: Dauer nicht näher bezeichnet
S11.84	Weichteilschaden I. Grades bei geschlossener Fraktur oder Luxation des Halses
S11.85	Weichteilschaden II. Grades bei geschlossener Fraktur oder Luxation des Halses
S11.86	Weichteilschaden III. Grades bei geschlossener Fraktur oder Luxation des Halses
S11.87	Weichteilschaden I. Grades bei offener Fraktur oder Luxation des Halses
S11.88	Weichteilschaden II. Grades bei offener Fraktur oder Luxation des Halses
S11.89	Weichteilschaden III. Grades bei offener Fraktur oder Luxation des Halses
S14.70	Verletzung des zervikalen Rückenmarkes: Höhe nicht näher bezeichnet
S14.71	Verletzung des Rückenmarkes: C1
S14.72	Verletzung des Rückenmarkes: C2
S14.73	Verletzung des Rückenmarkes: C3
S14.74	Verletzung des Rückenmarkes: C4
S14.75	Verletzung des Rückenmarkes: C5
S14.76	Verletzung des Rückenmarkes: C6
S14.77	Verletzung des Rückenmarkes: C7
S14.78	Verletzung des Rückenmarkes: C8
S21.83	Offene Wunde (jeder Teil des Thorax) mit Verbindung zu einer intrathorakalen Verletzung
S21.84	Weichteilschaden I. Grades bei geschlossener Fraktur oder Luxation des Thorax
S21.85	Weichteilschaden II. Grades bei geschlossener Fraktur oder Luxation des Thorax
S21.86	Weichteilschaden III. Grades bei geschlossener Fraktur oder Luxation des Thorax
S21.87	Weichteilschaden I. Grades bei offener Fraktur oder Luxation des Thorax
S21.88	Weichteilschaden II. Grades bei offener Fraktur oder Luxation des Thorax
S21.89	Weichteilschaden III. Grades bei offener Fraktur oder Luxation des Thorax
S24.70	Verletzung des thorakalen Rückenmarkes: Höhe nicht näher bezeichnet
S24.71	Verletzung des Rückenmarkes: T1
S24.72	Verletzung des Rückenmarkes: T2/T3
S24.73	Verletzung des Rückenmarkes: T4/T5
S24.74	Verletzung des Rückenmarkes: T6/T7
S24.75	Verletzung des Rückenmarkes: T8/T9
S24.76	Verletzung des Rückenmarkes: T10/T11
S24.77	Verletzung des Rückenmarkes: T12

Code	Beschreibung
S31.83	Offene Wunde (jeder Teil des Abdomens, der Lumbosakralgegend und des Beckens) mit Verbindung zu einer intraabdominalen Verletzung
S31.84	Weichteilschaden I. Grades bei geschlossener Fraktur oder Luxation der Lendenwirbelsäule und des Beckens
S31.85	Weichteilschaden II. Grades bei geschlossener Fraktur oder Luxation der Lendenwirbelsäule und des Beckens
S31.86	Weichteilschaden III. Grades bei geschlossener Fraktur oder Luxation der Lendenwirbelsäule und des Beckens
S31.87	Weichteilschaden I. Grades bei offener Fraktur oder Luxation der Lendenwirbelsäule und des Beckens
S31.88	Weichteilschaden II. Grades bei offener Fraktur oder Luxation der Lendenwirbelsäule und des Beckens
S31.89	Weichteilschaden III. Grades bei offener Fraktur oder Luxation der Lendenwirbelsäule und des Beckens
S34.70	Verletzung des lumbosakralen Rückenmarkes: Höhe nicht näher bezeichnet
S34.71	Verletzung des Rückenmarkes: L1
S34.72	Verletzung des Rückenmarkes: L2
S34.73	Verletzung des Rückenmarkes: L3
S34.74	Verletzung des Rückenmarkes: L4
S34.75	Verletzung des Rückenmarkes: L5
S34.76	Verletzung des Rückenmarkes: S1
S34.77	Verletzung des Rückenmarkes: S2-S5
S41.84	Weichteilschaden I. Grades bei geschlossener Fraktur oder Luxation des Oberarmes
S41.85	Weichteilschaden II. Grades bei geschlossener Fraktur oder Luxation des Oberarmes
S41.86	Weichteilschaden III. Grades bei geschlossener Fraktur oder Luxation des Oberarmes
S41.87	Weichteilschaden I. Grades bei offener Fraktur oder Luxation des Oberarmes
S41.88	Weichteilschaden II. Grades bei offener Fraktur oder Luxation des Oberarmes
S41.89	Weichteilschaden III. Grades bei offener Fraktur oder Luxation des Oberarmes
S51.84	Weichteilschaden I. Grades bei geschlossener Fraktur oder Luxation des Unterarmes
S51.85	Weichteilschaden II. Grades bei geschlossener Fraktur oder Luxation des Unterarmes
S51.86	Weichteilschaden III. Grades bei geschlossener Fraktur oder Luxation des Unterarmes
S51.87	Weichteilschaden I. Grades bei offener Fraktur oder Luxation des Unterarmes
S51.88	Weichteilschaden II. Grades bei offener Fraktur oder Luxation des Unterarmes
S51.89	Weichteilschaden III. Grades bei offener Fraktur oder Luxation des Unterarmes
S61.84	Weichteilschaden I. Grades bei geschlossener Fraktur oder Luxation des Handgelenkes und der Hand
S61.85	Weichteilschaden II. Grades bei geschlossener Fraktur oder Luxation des Handgelenkes und der Hand
S61.86	Weichteilschaden III. Grades bei geschlossener Fraktur oder Luxation des Handgelenkes und der Hand
S61.87	Weichteilschaden I. Grades bei offener Fraktur oder Luxation des Handgelenkes und der Hand
S61.88	Weichteilschaden II. Grades bei offener Fraktur oder Luxation des Handgelenkes und der Hand
S61.89	Weichteilschaden III. Grades bei offener Fraktur oder Luxation des Handgelenkes und der Hand
S71.84	Weichteilschaden I. Grades bei geschlossener Fraktur oder Luxation der Hüfte und des Oberschenkels
S71.85	Weichteilschaden II. Grades bei geschlossener Fraktur oder Luxation der Hüfte und des Oberschenkels
S71.86	Weichteilschaden III. Grades bei geschlossener Fraktur oder Luxation der Hüfte und des Oberschenkels
S71.87	Weichteilschaden I. Grades bei offener Fraktur oder Luxation der Hüfte und des Oberschenkels
S71.88	Weichteilschaden II. Grades bei offener Fraktur oder Luxation der Hüfte und des Oberschenkels
S71.89	Weichteilschaden III. Grades bei offener Fraktur oder Luxation der Hüfte und des Oberschenkels
S81.84	Weichteilschaden I. Grades bei geschlossener Fraktur oder Luxation des Unterschenkels
S81.85	Weichteilschaden II. Grades bei geschlossener Fraktur oder Luxation des Unterschenkels
S81.86	Weichteilschaden III. Grades bei geschlossener Fraktur oder Luxation des Unterschenkels
S81.87	Weichteilschaden I. Grades bei offener Fraktur oder Luxation des Unterschenkels
S81.88	Weichteilschaden II. Grades bei offener Fraktur oder Luxation des Unterschenkels
S81.89	Weichteilschaden III. Grades bei offener Fraktur oder Luxation des Unterschenkels
S91.84	Weichteilschaden I. Grades bei geschlossener Fraktur oder Luxation des Fußes
S91.85	Weichteilschaden II. Grades bei geschlossener Fraktur oder Luxation des Fußes
S91.86	Weichteilschaden III. Grades bei geschlossener Fraktur oder Luxation des Fußes
S91.87	Weichteilschaden I. Grades bei offener Fraktur oder Luxation des Fußes
S91.88	Weichteilschaden II. Grades bei offener Fraktur oder Luxation des Fußes
S91.89	Weichteilschaden III. Grades bei offener Fraktur oder Luxation des Fußes
T31.00	Verbrennungen von weniger als 10 % der Körperoberfläche: Weniger als 10 % oder nicht näher bezeichneter Anteil von Verbrennungen 3. Grades
T31.10	Verbrennungen von 10-19 % der Körperoberfläche: Weniger als 10 % oder nicht näher bezeichneter Anteil von Verbrennungen 3. Grades
T31.11	Verbrennungen von 10-19 % der Körperoberfläche: 10-19 % Verbrennungen 3. Grades
T31.20	Verbrennungen von 20-29 % der Körperoberfläche: Weniger als 10 % oder nicht näher bezeichneter Anteil von Verbrennungen 3. Grades
T31.21	Verbrennungen von 20-29 % der Körperoberfläche: 10-19 % Verbrennungen 3. Grades
T31.22	Verbrennungen von 20-29 % der Körperoberfläche: 20-29 % Verbrennungen 3. Grades
T31.30	Verbrennungen von 30-39 % der Körperoberfläche: Weniger als 10 % oder nicht näher bezeichneter Anteil von Verbrennungen 3. Grades
T31.31	Verbrennungen von 30-39 % der Körperoberfläche: 10-19 % Verbrennungen 3. Grades
T31.32	Verbrennungen von 30-39 % der Körperoberfläche: 20-29 % Verbrennungen 3. Grades
T31.33	Verbrennungen von 30-39 % der Körperoberfläche: 30-39 % Verbrennungen 3. Grades
T31.40	Verbrennungen von 40-49 % der Körperoberfläche: Weniger als 10 % oder nicht näher bezeichneter Anteil von Verbrennungen 3. Grades
T31.41	Verbrennungen von 40-49 % der Körperoberfläche: 10-19 % Verbrennungen 3. Grades
T31.42	Verbrennungen von 40-49 % der Körperoberfläche: 20-29 % Verbrennungen 3. Grades
T31.43	Verbrennungen von 40-49 % der Körperoberfläche: 30-39 % Verbrennungen 3. Grades

PDX

Code	Beschreibung
T31.44	Verbrennungen von 40-49 % der Körperoberfläche: 40-49 % Verbrennungen 3. Grades
T31.50	Verbrennungen von 50-59 % der Körperoberfläche: Weniger als 10 % oder nicht näher bezeichneter Anteil von Verbrennungen 3. Grades
T31.51	Verbrennungen von 50-59 % der Körperoberfläche: 10-19 % Verbrennungen 3. Grades
T31.52	Verbrennungen von 50-59 % der Körperoberfläche: 20-29 % Verbrennungen 3. Grades
T31.53	Verbrennungen von 50-59 % der Körperoberfläche: 30-39 % Verbrennungen 3. Grades
T31.54	Verbrennungen von 50-59 % der Körperoberfläche: 40-49 % Verbrennungen 3. Grades
T31.55	Verbrennungen von 50-59 % der Körperoberfläche: 50-59 % Verbrennungen 3. Grades
T31.60	Verbrennungen von 60-69 % der Körperoberfläche: Weniger als 10 % oder nicht näher bezeichneter Anteil von Verbrennungen 3. Grades
T31.61	Verbrennungen von 60-69 % der Körperoberfläche: 10-19 % Verbrennungen 3. Grades
T31.62	Verbrennungen von 60-69 % der Körperoberfläche: 20-29 % Verbrennungen 3. Grades
T31.63	Verbrennungen von 60-69 % der Körperoberfläche: 30-39 % Verbrennungen 3. Grades
T31.64	Verbrennungen von 60-69 % der Körperoberfläche: 40-49 % Verbrennungen 3. Grades
T31.65	Verbrennungen von 60-69 % der Körperoberfläche: 50-59 % Verbrennungen 3. Grades
T31.66	Verbrennungen von 60-69 % der Körperoberfläche: 60-69 % Verbrennungen 3. Grades
T31.70	Verbrennungen von 70-79 % der Körperoberfläche: Weniger als 10 % oder nicht näher bezeichneter Anteil von Verbrennungen 3. Grades
T31.71	Verbrennungen von 70-79 % der Körperoberfläche: 10-19 % Verbrennungen 3. Grades
T31.72	Verbrennungen von 70-79 % der Körperoberfläche: 20-29 % Verbrennungen 3. Grades
T31.73	Verbrennungen von 70-79 % der Körperoberfläche: 30-39 % Verbrennungen 3. Grades
T31.74	Verbrennungen von 70-79 % der Körperoberfläche: 40-49 % Verbrennungen 3. Grades
T31.75	Verbrennungen von 70-79 % der Körperoberfläche: 50-59 % Verbrennungen 3. Grades
T31.76	Verbrennungen von 70-79 % der Körperoberfläche: 60-69 % Verbrennungen 3. Grades
T31.77	Verbrennungen von 70-79 % der Körperoberfläche: 70-79 % Verbrennungen 3. Grades
T31.80	Verbrennungen von 80-89 % der Körperoberfläche: Weniger als 10 % oder nicht näher bezeichneter Anteil von Verbrennungen 3. Grades
T31.81	Verbrennungen von 80-89 % der Körperoberfläche: 10-19 % Verbrennungen 3. Grades
T31.82	Verbrennungen von 80-89 % der Körperoberfläche: 20-29 % Verbrennungen 3. Grades
T31.83	Verbrennungen von 80-89 % der Körperoberfläche: 30-39 % Verbrennungen 3. Grades
T31.84	Verbrennungen von 80-89 % der Körperoberfläche: 40-49 % Verbrennungen 3. Grades
T31.85	Verbrennungen von 80-89 % der Körperoberfläche: 50-59 % Verbrennungen 3. Grades
T31.86	Verbrennungen von 80-89 % der Körperoberfläche: 60-69 % Verbrennungen 3. Grades
T31.87	Verbrennungen von 80-89 % der Körperoberfläche: 70-79 % Verbrennungen 3. Grades
T31.88	Verbrennungen von 80-89 % der Körperoberfläche: 80-89 % Verbrennungen 3. Grades
T31.90	Verbrennungen von 90 % oder mehr der Körperoberfläche: Weniger als 10 % oder nicht näher bezeichneter Anteil von Verbrennungen 3. Grades
T31.91	Verbrennungen von 90 % oder mehr der Körperoberfläche: 10-19 % Verbrennungen 3. Grades
T31.92	Verbrennungen von 90 % oder mehr der Körperoberfläche: 20-29 % Verbrennungen 3. Grades
T31.93	Verbrennungen von 90 % oder mehr der Körperoberfläche: 30-39 % Verbrennungen 3. Grades
T31.94	Verbrennungen von 90 % oder mehr der Körperoberfläche: 40-49 % Verbrennungen 3. Grades
T31.95	Verbrennungen von 90 % oder mehr der Körperoberfläche: 50-59 % Verbrennungen 3. Grades
T31.96	Verbrennungen von 90 % oder mehr der Körperoberfläche: 60-69 % Verbrennungen 3. Grades
T31.97	Verbrennungen von 90 % oder mehr der Körperoberfläche: 70-79 % Verbrennungen 3. Grades
T31.98	Verbrennungen von 90 % oder mehr der Körperoberfläche: 80-89 % Verbrennungen 3. Grades
T31.99	Verbrennungen von 90 % oder mehr der Körperoberfläche: 90 % oder mehr Verbrennungen 3. Grades
T32.00	Verätzungen von weniger als 10 % der Körperoberfläche: Weniger als 10 % oder nicht näher bezeichneter Anteil von Verätzungen 3. Grades
T32.10	Verätzungen von 10-19 % der Körperoberfläche: Weniger als 10 % oder nicht näher bezeichneter Anteil von Verätzungen 3. Grades
T32.11	Verätzungen von 10-19 % der Körperoberfläche: 10-19 % Verätzungen 3. Grades
T32.20	Verätzungen von 20-29 % der Körperoberfläche: Weniger als 10 % oder nicht näher bezeichneter Anteil von Verätzungen 3. Grades
T32.21	Verätzungen von 20-29 % der Körperoberfläche: 10-19 % Verätzungen 3. Grades
T32.22	Verätzungen von 20-29 % der Körperoberfläche: 20-29 % Verätzungen 3. Grades
T32.30	Verätzungen von 30-39 % der Körperoberfläche: Weniger als 10 % oder nicht näher bezeichneter Anteil von Verätzungen 3. Grades
T32.31	Verätzungen von 30-39 % der Körperoberfläche: 10-19 % Verätzungen 3. Grades
T32.32	Verätzungen von 30-39 % der Körperoberfläche: 20-29 % Verätzungen 3. Grades
T32.33	Verätzungen von 30-39 % der Körperoberfläche: 30-39 % Verätzungen 3. Grades
T32.40	Verätzungen von 40-49 % der Körperoberfläche: Weniger als 10 % oder nicht näher bezeichneter Anteil von Verätzungen 3. Grades
T32.41	Verätzungen von 40-49 % der Körperoberfläche: 10-19 % Verätzungen 3. Grades
T32.42	Verätzungen von 40-49 % der Körperoberfläche: 20-29 % Verätzungen 3. Grades
T32.43	Verätzungen von 40-49 % der Körperoberfläche: 30-39 % Verätzungen 3. Grades
T32.44	Verätzungen von 40-49 % der Körperoberfläche: 40-49 % Verätzungen 3. Grades
T32.50	Verätzungen von 50-59 % der Körperoberfläche: Weniger als 10 % oder nicht näher bezeichneter Anteil von Verätzungen 3. Grades
T32.51	Verätzungen von 50-59 % der Körperoberfläche: 10-19 % Verätzungen 3. Grades
T32.52	Verätzungen von 50-59 % der Körperoberfläche: 20-29 % Verätzungen 3. Grades

Code	Beschreibung
T32.53	Verätzungen von 50-59 % der Körperoberfläche: 30-39 % Verätzungen 3. Grades
T32.54	Verätzungen von 50-59 % der Körperoberfläche: 40-49 % Verätzungen 3. Grades
T32.55	Verätzungen von 50-59 % der Körperoberfläche: 50-59 % Verätzungen 3. Grades
T32.60	Verätzungen von 60-69 % der Körperoberfläche: Weniger als 10 % oder nicht näher bezeichneter Anteil von Verätzungen 3. Grades
T32.61	Verätzungen von 60-69 % der Körperoberfläche: 10-19 % Verätzungen 3. Grades
T32.62	Verätzungen von 60-69 % der Körperoberfläche: 20-29 % Verätzungen 3. Grades
T32.63	Verätzungen von 60-69 % der Körperoberfläche: 30-39 % Verätzungen 3. Grades
T32.64	Verätzungen von 60-69 % der Körperoberfläche: 40-49 % Verätzungen 3. Grades
T32.65	Verätzungen von 60-69 % der Körperoberfläche: 50-59 % Verätzungen 3. Grades
T32.66	Verätzungen von 60-69 % der Körperoberfläche: 60-69 % Verätzungen 3. Grades
T32.70	Verätzungen von 70-79 % der Körperoberfläche: Weniger als 10 % oder nicht näher bezeichneter Anteil von Verätzungen 3. Grades
T32.71	Verätzungen von 70-79 % der Körperoberfläche: 10-19 % Verätzungen 3. Grades
T32.72	Verätzungen von 70-79 % der Körperoberfläche: 20-29 % Verätzungen 3. Grades
T32.73	Verätzungen von 70-79 % der Körperoberfläche: 30-39 % Verätzungen 3. Grades
T32.74	Verätzungen von 70-79 % der Körperoberfläche: 40-49 % Verätzungen 3. Grades
T32.75	Verätzungen von 70-79 % der Körperoberfläche: 50-59 % Verätzungen 3. Grades
T32.76	Verätzungen von 70-79 % der Körperoberfläche: 60-69 % Verätzungen 3. Grades
T32.77	Verätzungen von 70-79 % der Körperoberfläche: 70-79 % Verätzungen 3. Grades
T32.80	Verätzungen von 80-89 % der Körperoberfläche: Weniger als 10 % oder nicht näher bezeichneter Anteil von Verätzungen 3. Grades
T32.81	Verätzungen von 80-89 % der Körperoberfläche: 10-19 % Verätzungen 3. Grades
T32.82	Verätzungen von 80-89 % der Körperoberfläche: 20-29 % Verätzungen 3. Grades
T32.83	Verätzungen von 80-89 % der Körperoberfläche: 30-39 % Verätzungen 3. Grades
T32.84	Verätzungen von 80-89 % der Körperoberfläche: 40-49 % Verätzungen 3. Grades
T32.85	Verätzungen von 80-89 % der Körperoberfläche: 50-59 % Verätzungen 3. Grades
T32.86	Verätzungen von 80-89 % der Körperoberfläche: 60-69 % Verätzungen 3. Grades
T32.87	Verätzungen von 80-89 % der Körperoberfläche: 70-79 % Verätzungen 3. Grades
T32.88	Verätzungen von 80-89 % der Körperoberfläche: 80-89 % Verätzungen 3. Grades
T32.90	Verätzungen von 90 % oder mehr der Körperoberfläche: Weniger als 10 % oder nicht näher bezeichneter Anteil von Verätzungen 3. Grades
T32.91	Verätzungen von 90 % oder mehr der Körperoberfläche: 10-19 % Verätzungen 3. Grades
T32.92	Verätzungen von 90 % oder mehr der Körperoberfläche: 20-29 % Verätzungen 3. Grades
T32.93	Verätzungen von 90 % oder mehr der Körperoberfläche: 30-39 % Verätzungen 3. Grades
T32.94	Verätzungen von 90 % oder mehr der Körperoberfläche: 40-49 % Verätzungen 3. Grades
T32.95	Verätzungen von 90 % oder mehr der Körperoberfläche: 50-59 % Verätzungen 3. Grades
T32.96	Verätzungen von 90 % oder mehr der Körperoberfläche: 60-69 % Verätzungen 3. Grades
T32.97	Verätzungen von 90 % oder mehr der Körperoberfläche: 70-79 % Verätzungen 3. Grades
T32.98	Verätzungen von 90 % oder mehr der Körperoberfläche: 80-89 % Verätzungen 3. Grades
T32.99	Verätzungen von 90 % oder mehr der Körperoberfläche: 90 % oder mehr Verätzungen 3. Grades
T74.0	Vernachlässigen oder Imstichlassen
T74.1	Körperlicher Missbrauch
T74.2	Sexueller Missbrauch
T74.3	Psychischer Missbrauch
T74.8	Sonstige Formen des Missbrauchs von Personen
T74.9	Missbrauch von Personen, nicht näher bezeichnet
T90.0	Folgen einer oberflächlichen Verletzung des Kopfes
T90.1	Folgen einer offenen Wunde des Kopfes
T90.2	Folgen einer Fraktur des Schädels und der Gesichtsschädelknochen
T90.3	Folgen einer Verletzung der Hirnnerven
T90.4	Folgen einer Verletzung des Auges und der Orbita
T90.5	Folgen einer intrakraniellen Verletzung
T90.8	Folgen sonstiger näher bezeichneter Verletzungen des Kopfes
T90.9	Folgen einer nicht näher bezeichneten Verletzung des Kopfes
T91.0	Folgen einer oberflächlichen Verletzung und einer offenen Wunde des Halses und des Rumpfes
T91.1	Folgen einer Fraktur der Wirbelsäule
T91.2	Folgen einer sonstigen Fraktur des Thorax und des Beckens
T91.3	Folgen einer Verletzung des Rückenmarkes
T91.4	Folgen einer Verletzung der intrathorakalen Organe
T91.5	Folgen einer Verletzung der intraabdominalen Organe und der Beckenorgane
T91.8	Folgen sonstiger näher bezeichneter Verletzungen des Halses und des Rumpfes
T91.9	Folgen einer nicht näher bezeichneten Verletzung des Halses und des Rumpfes
T92.0	Folgen einer offenen Wunde der oberen Extremität
T92.1	Folgen einer Fraktur des Armes
T92.2	Folgen einer Fraktur in Höhe des Handgelenkes und der Hand
T92.3	Folgen einer Luxation, Verstauchung oder Zerrung der oberen Extremität
T92.4	Folgen einer Verletzung von Nerven der oberen Extremität
T92.5	Folgen einer Verletzung von Muskeln und Sehnen der oberen Extremität
T92.6	Folgen einer Zerquetschung oder einer traumatischen Amputation der oberen Extremität
T92.8	Folgen sonstiger näher bezeichneter Verletzungen der oberen Extremität
T92.9	Folgen einer nicht näher bezeichneten Verletzung der oberen Extremität
T93.0	Folgen einer offenen Wunde der unteren Extremität
T93.1	Folgen einer Fraktur des Femurs
T93.2	Folgen sonstiger Frakturen der unteren Extremität
T93.3	Folgen einer Luxation, Verstauchung oder Zerrung der unteren Extremität
T93.4	Folgen einer Verletzung von Nerven der unteren Extremität
T93.5	Folgen einer Verletzung von Muskeln und Sehnen der unteren Extremität
T93.6	Folgen einer Zerquetschung oder einer traumatischen Amputation der unteren Extremität
T93.8	Folgen sonstiger näher bezeichneter Verletzungen der unteren Extremität

PDX

Code	Beschreibung
T93.9	Folgen einer nicht näher bezeichneten Verletzung der unteren Extremität
T94.0	Folgen von Verletzungen mehrerer Körperregionen
T94.1	Folgen von Verletzungen nicht näher bezeichneter Körperregionen
T95.0	Folgen einer Verbrennung, Verätzung oder Erfrierung des Kopfes oder des Halses
T95.1	Folgen einer Verbrennung, Verätzung oder Erfrierung des Rumpfes
T95.2	Folgen einer Verbrennung, Verätzung oder Erfrierung der oberen Extremität
T95.3	Folgen einer Verbrennung, Verätzung oder Erfrierung der unteren Extremität
T95.4	Folgen einer Verbrennung oder Verätzung, die nur nach der Größe der betroffenen Körperoberfläche klassifizierbar ist
T95.8	Folgen einer sonstigen näher bezeichneten Verbrennung, Verätzung oder Erfrierung
T95.9	Folgen einer nicht näher bezeichneten Verbrennung, Verätzung oder Erfrierung
T96	Folgen einer Vergiftung durch Arzneimittel, Drogen und biologisch aktive Substanzen
T97	Folgen toxischer Wirkungen von vorwiegend nicht medizinisch verwendeten Substanzen
T98.0	Folgen der Auswirkungen von Fremdkörpern in natürlichen Körperöffnungen
T98.1	Folgen sonstiger und nicht näher bezeichneter Schäden durch äußere Ursachen
T98.2	Folgen bestimmter Frühkomplikationen eines Traumas
T98.3	Folgen von Komplikationen bei chirurgischen Eingriffen und medizinischer Behandlung, anderenorts nicht klassifiziert
U07.0	Gesundheitsstörung im Zusammenhang mit dem Gebrauch von E-Zigaretten [Vaporizer]
U07.1	COVID-19, Virus nachgewiesen
U07.2	COVID-19, Virus nicht nachgewiesen
U07.6	Nicht belegte Schlüsselnummer U07.6
U07.7	Nicht belegte Schlüsselnummer U07.7
U07.8	Nicht belegte Schlüsselnummer U07.8
U07.9	Nicht belegte Schlüsselnummer U07.9
U09.9	Post-COVID-19-Zustand, nicht näher bezeichnet
U11.9	Notwendigkeit der Impfung gegen COVID-19, nicht näher bezeichnet
U12.9	Unerwünschte Nebenwirkungen bei der Anwendung von COVID-19-Impfstoffen, nicht näher bezeichnet
U13.0	Nicht belegte Schlüsselnummer U13.0
U13.1	Nicht belegte Schlüsselnummer U13.1
U13.2	Nicht belegte Schlüsselnummer U13.2
U13.3	Nicht belegte Schlüsselnummer U13.3
U13.4	Nicht belegte Schlüsselnummer U13.4
U13.5	Nicht belegte Schlüsselnummer U13.5
U13.6	Nicht belegte Schlüsselnummer U13.6
U13.7	Nicht belegte Schlüsselnummer U13.7
U13.8	Nicht belegte Schlüsselnummer U13.8
U13.9	Nicht belegte Schlüsselnummer U13.9
U14.0	Nicht belegte Schlüsselnummer U14.0
U14.1	Nicht belegte Schlüsselnummer U14.1
U14.2	Nicht belegte Schlüsselnummer U14.2
U14.3	Nicht belegte Schlüsselnummer U14.3
U14.4	Nicht belegte Schlüsselnummer U14.4
U14.5	Nicht belegte Schlüsselnummer U14.5
U14.6	Nicht belegte Schlüsselnummer U14.6
U14.7	Nicht belegte Schlüsselnummer U14.7
U14.8	Nicht belegte Schlüsselnummer U14.8
U14.9	Nicht belegte Schlüsselnummer U14.9
U15.0	Nicht belegte Schlüsselnummer U15.0
U15.1	Nicht belegte Schlüsselnummer U15.1
U15.2	Nicht belegte Schlüsselnummer U15.2
U15.3	Nicht belegte Schlüsselnummer U15.3

Code	Beschreibung
U15.4	Nicht belegte Schlüsselnummer U15.4
U15.5	Nicht belegte Schlüsselnummer U15.5
U15.6	Nicht belegte Schlüsselnummer U15.6
U15.7	Nicht belegte Schlüsselnummer U15.7
U15.8	Nicht belegte Schlüsselnummer U15.8
U15.9	Nicht belegte Schlüsselnummer U15.9
U16.0	Nicht belegte Schlüsselnummer U16.0
U16.1	Nicht belegte Schlüsselnummer U16.1
U16.2	Nicht belegte Schlüsselnummer U16.2
U16.3	Nicht belegte Schlüsselnummer U16.3
U16.4	Nicht belegte Schlüsselnummer U16.4
U16.5	Nicht belegte Schlüsselnummer U16.5
U16.6	Nicht belegte Schlüsselnummer U16.6
U16.7	Nicht belegte Schlüsselnummer U16.7
U16.8	Nicht belegte Schlüsselnummer U16.8
U16.9	Nicht belegte Schlüsselnummer U16.9
U17.0	Nicht belegte Schlüsselnummer U17.0
U17.1	Nicht belegte Schlüsselnummer U17.1
U17.2	Nicht belegte Schlüsselnummer U17.2
U17.3	Nicht belegte Schlüsselnummer U17.3
U17.4	Nicht belegte Schlüsselnummer U17.4
U17.5	Nicht belegte Schlüsselnummer U17.5
U17.6	Nicht belegte Schlüsselnummer U17.6
U17.7	Nicht belegte Schlüsselnummer U17.7
U17.8	Nicht belegte Schlüsselnummer U17.8
U17.9	Nicht belegte Schlüsselnummer U17.9
U18.0	Nicht belegte Schlüsselnummer U18.0
U18.1	Nicht belegte Schlüsselnummer U18.1
U18.2	Nicht belegte Schlüsselnummer U18.2
U18.3	Nicht belegte Schlüsselnummer U18.3
U18.4	Nicht belegte Schlüsselnummer U18.4
U18.5	Nicht belegte Schlüsselnummer U18.5
U18.6	Nicht belegte Schlüsselnummer U18.6
U18.7	Nicht belegte Schlüsselnummer U18.7
U18.8	Nicht belegte Schlüsselnummer U18.8
U18.9	Nicht belegte Schlüsselnummer U18.9
U19.0	Nicht belegte Schlüsselnummer U19.0
U19.1	Nicht belegte Schlüsselnummer U19.1
U19.2	Nicht belegte Schlüsselnummer U19.2
U19.3	Nicht belegte Schlüsselnummer U19.3
U19.4	Nicht belegte Schlüsselnummer U19.4
U19.5	Nicht belegte Schlüsselnummer U19.5
U19.6	Nicht belegte Schlüsselnummer U19.6
U19.7	Nicht belegte Schlüsselnummer U19.7
U19.8	Nicht belegte Schlüsselnummer U19.8
U19.9	Nicht belegte Schlüsselnummer U19.9
U20.0	Nicht belegte Schlüsselnummer U20.0
U20.1	Nicht belegte Schlüsselnummer U20.1
U20.2	Nicht belegte Schlüsselnummer U20.2
U20.3	Nicht belegte Schlüsselnummer U20.3
U20.4	Nicht belegte Schlüsselnummer U20.4
U20.5	Nicht belegte Schlüsselnummer U20.5
U20.6	Nicht belegte Schlüsselnummer U20.6
U20.7	Nicht belegte Schlüsselnummer U20.7
U20.8	Nicht belegte Schlüsselnummer U20.8
U20.9	Nicht belegte Schlüsselnummer U20.9
U21.0	Nicht belegte Schlüsselnummer U21.0
U21.1	Nicht belegte Schlüsselnummer U21.1
U21.2	Nicht belegte Schlüsselnummer U21.2
U21.3	Nicht belegte Schlüsselnummer U21.3
U21.4	Nicht belegte Schlüsselnummer U21.4
U21.5	Nicht belegte Schlüsselnummer U21.5
U21.6	Nicht belegte Schlüsselnummer U21.6
U21.7	Nicht belegte Schlüsselnummer U21.7
U21.8	Nicht belegte Schlüsselnummer U21.8
U21.9	Nicht belegte Schlüsselnummer U21.9
U22.0	Nicht belegte Schlüsselnummer U22.0
U22.1	Nicht belegte Schlüsselnummer U22.1
U22.2	Nicht belegte Schlüsselnummer U22.2
U22.3	Nicht belegte Schlüsselnummer U22.3

Code	Beschreibung
U22.4	Nicht belegte Schlüsselnummer U22.4
U22.5	Nicht belegte Schlüsselnummer U22.5
U22.6	Nicht belegte Schlüsselnummer U22.6
U22.7	Nicht belegte Schlüsselnummer U22.7
U22.8	Nicht belegte Schlüsselnummer U22.8
U22.9	Nicht belegte Schlüsselnummer U22.9
U23.0	Nicht belegte Schlüsselnummer U23.0
U23.1	Nicht belegte Schlüsselnummer U23.1
U23.2	Nicht belegte Schlüsselnummer U23.2
U23.3	Nicht belegte Schlüsselnummer U23.3
U23.4	Nicht belegte Schlüsselnummer U23.4
U23.5	Nicht belegte Schlüsselnummer U23.5
U23.6	Nicht belegte Schlüsselnummer U23.6
U23.7	Nicht belegte Schlüsselnummer U23.7
U23.8	Nicht belegte Schlüsselnummer U23.8
U23.9	Nicht belegte Schlüsselnummer U23.9
U24.0	Nicht belegte Schlüsselnummer U24.0
U24.1	Nicht belegte Schlüsselnummer U24.1
U24.2	Nicht belegte Schlüsselnummer U24.2
U24.3	Nicht belegte Schlüsselnummer U24.3
U24.4	Nicht belegte Schlüsselnummer U24.4
U24.5	Nicht belegte Schlüsselnummer U24.5
U24.6	Nicht belegte Schlüsselnummer U24.6
U24.7	Nicht belegte Schlüsselnummer U24.7
U24.8	Nicht belegte Schlüsselnummer U24.8
U24.9	Nicht belegte Schlüsselnummer U24.9
U25.0	Nicht belegte Schlüsselnummer U25.0
U25.1	Nicht belegte Schlüsselnummer U25.1
U25.2	Nicht belegte Schlüsselnummer U25.2
U25.3	Nicht belegte Schlüsselnummer U25.3
U25.4	Nicht belegte Schlüsselnummer U25.4
U25.5	Nicht belegte Schlüsselnummer U25.5
U25.6	Nicht belegte Schlüsselnummer U25.6
U25.7	Nicht belegte Schlüsselnummer U25.7
U25.8	Nicht belegte Schlüsselnummer U25.8
U25.9	Nicht belegte Schlüsselnummer U25.9
U26.0	Nicht belegte Schlüsselnummer U26.0
U26.1	Nicht belegte Schlüsselnummer U26.1
U26.2	Nicht belegte Schlüsselnummer U26.2
U26.3	Nicht belegte Schlüsselnummer U26.3
U26.4	Nicht belegte Schlüsselnummer U26.4
U26.5	Nicht belegte Schlüsselnummer U26.5
U26.6	Nicht belegte Schlüsselnummer U26.6
U26.7	Nicht belegte Schlüsselnummer U26.7
U26.8	Nicht belegte Schlüsselnummer U26.8
U26.9	Nicht belegte Schlüsselnummer U26.9
U27.0	Nicht belegte Schlüsselnummer U27.0
U27.1	Nicht belegte Schlüsselnummer U27.1
U27.2	Nicht belegte Schlüsselnummer U27.2
U27.3	Nicht belegte Schlüsselnummer U27.3
U27.4	Nicht belegte Schlüsselnummer U27.4
U27.5	Nicht belegte Schlüsselnummer U27.5
U27.6	Nicht belegte Schlüsselnummer U27.6
U27.7	Nicht belegte Schlüsselnummer U27.7
U27.8	Nicht belegte Schlüsselnummer U27.8
U27.9	Nicht belegte Schlüsselnummer U27.9
U28.0	Nicht belegte Schlüsselnummer U28.0
U28.1	Nicht belegte Schlüsselnummer U28.1
U28.2	Nicht belegte Schlüsselnummer U28.2
U28.3	Nicht belegte Schlüsselnummer U28.3
U28.4	Nicht belegte Schlüsselnummer U28.4
U28.5	Nicht belegte Schlüsselnummer U28.5
U28.6	Nicht belegte Schlüsselnummer U28.6
U28.7	Nicht belegte Schlüsselnummer U28.7
U28.8	Nicht belegte Schlüsselnummer U28.8
U28.9	Nicht belegte Schlüsselnummer U28.9
U29.0	Nicht belegte Schlüsselnummer U29.0
U29.1	Nicht belegte Schlüsselnummer U29.1
U29.2	Nicht belegte Schlüsselnummer U29.2
U29.3	Nicht belegte Schlüsselnummer U29.3

Code	Beschreibung
U29.4	Nicht belegte Schlüsselnummer U29.4
U29.5	Nicht belegte Schlüsselnummer U29.5
U29.6	Nicht belegte Schlüsselnummer U29.6
U29.7	Nicht belegte Schlüsselnummer U29.7
U29.8	Nicht belegte Schlüsselnummer U29.8
U29.9	Nicht belegte Schlüsselnummer U29.9
U30.0	Nicht belegte Schlüsselnummer U30.0
U30.1	Nicht belegte Schlüsselnummer U30.1
U30.2	Nicht belegte Schlüsselnummer U30.2
U30.3	Nicht belegte Schlüsselnummer U30.3
U30.4	Nicht belegte Schlüsselnummer U30.4
U30.5	Nicht belegte Schlüsselnummer U30.5
U30.6	Nicht belegte Schlüsselnummer U30.6
U30.7	Nicht belegte Schlüsselnummer U30.7
U30.8	Nicht belegte Schlüsselnummer U30.8
U30.9	Nicht belegte Schlüsselnummer U30.9
U31.0	Nicht belegte Schlüsselnummer U31.0
U31.1	Nicht belegte Schlüsselnummer U31.1
U31.2	Nicht belegte Schlüsselnummer U31.2
U31.3	Nicht belegte Schlüsselnummer U31.3
U31.4	Nicht belegte Schlüsselnummer U31.4
U31.5	Nicht belegte Schlüsselnummer U31.5
U31.6	Nicht belegte Schlüsselnummer U31.6
U31.7	Nicht belegte Schlüsselnummer U31.7
U31.8	Nicht belegte Schlüsselnummer U31.8
U31.9	Nicht belegte Schlüsselnummer U31.9
U32.0	Nicht belegte Schlüsselnummer U32.0
U32.1	Nicht belegte Schlüsselnummer U32.1
U32.2	Nicht belegte Schlüsselnummer U32.2
U32.3	Nicht belegte Schlüsselnummer U32.3
U32.4	Nicht belegte Schlüsselnummer U32.4
U32.5	Nicht belegte Schlüsselnummer U32.5
U32.6	Nicht belegte Schlüsselnummer U32.6
U32.7	Nicht belegte Schlüsselnummer U32.7
U32.8	Nicht belegte Schlüsselnummer U32.8
U32.9	Nicht belegte Schlüsselnummer U32.9
U33.0	Nicht belegte Schlüsselnummer U33.0
U33.1	Nicht belegte Schlüsselnummer U33.1
U33.2	Nicht belegte Schlüsselnummer U33.2
U33.3	Nicht belegte Schlüsselnummer U33.3
U33.4	Nicht belegte Schlüsselnummer U33.4
U33.5	Nicht belegte Schlüsselnummer U33.5
U33.6	Nicht belegte Schlüsselnummer U33.6
U33.7	Nicht belegte Schlüsselnummer U33.7
U33.8	Nicht belegte Schlüsselnummer U33.8
U33.9	Nicht belegte Schlüsselnummer U33.9
U34.0	Nicht belegte Schlüsselnummer U34.0
U34.1	Nicht belegte Schlüsselnummer U34.1
U34.2	Nicht belegte Schlüsselnummer U34.2
U34.3	Nicht belegte Schlüsselnummer U34.3
U34.4	Nicht belegte Schlüsselnummer U34.4
U34.5	Nicht belegte Schlüsselnummer U34.5
U34.6	Nicht belegte Schlüsselnummer U34.6
U34.7	Nicht belegte Schlüsselnummer U34.7
U34.8	Nicht belegte Schlüsselnummer U34.8
U34.9	Nicht belegte Schlüsselnummer U34.9
U35.0	Nicht belegte Schlüsselnummer U35.0
U35.1	Nicht belegte Schlüsselnummer U35.1
U35.2	Nicht belegte Schlüsselnummer U35.2
U35.3	Nicht belegte Schlüsselnummer U35.3
U35.4	Nicht belegte Schlüsselnummer U35.4
U35.5	Nicht belegte Schlüsselnummer U35.5
U35.6	Nicht belegte Schlüsselnummer U35.6
U35.7	Nicht belegte Schlüsselnummer U35.7
U35.8	Nicht belegte Schlüsselnummer U35.8
U35.9	Nicht belegte Schlüsselnummer U35.9
U36.0	Nicht belegte Schlüsselnummer U36.0
U36.1	Nicht belegte Schlüsselnummer U36.1
U36.2	Nicht belegte Schlüsselnummer U36.2
U36.3	Nicht belegte Schlüsselnummer U36.3

Code	Beschreibung
U36.4	Nicht belegte Schlüsselnummer U36.4
U36.5	Nicht belegte Schlüsselnummer U36.5
U36.6	Nicht belegte Schlüsselnummer U36.6
U36.7	Nicht belegte Schlüsselnummer U36.7
U36.8	Nicht belegte Schlüsselnummer U36.8
U36.9	Nicht belegte Schlüsselnummer U36.9
U37.0	Nicht belegte Schlüsselnummer U37.0
U37.1	Nicht belegte Schlüsselnummer U37.1
U37.2	Nicht belegte Schlüsselnummer U37.2
U37.3	Nicht belegte Schlüsselnummer U37.3
U37.4	Nicht belegte Schlüsselnummer U37.4
U37.5	Nicht belegte Schlüsselnummer U37.5
U37.6	Nicht belegte Schlüsselnummer U37.6
U37.7	Nicht belegte Schlüsselnummer U37.7
U37.8	Nicht belegte Schlüsselnummer U37.8
U37.9	Nicht belegte Schlüsselnummer U37.9
U38.0	Nicht belegte Schlüsselnummer U38.0
U38.1	Nicht belegte Schlüsselnummer U38.1
U38.2	Nicht belegte Schlüsselnummer U38.2
U38.3	Nicht belegte Schlüsselnummer U38.3
U38.4	Nicht belegte Schlüsselnummer U38.4
U38.5	Nicht belegte Schlüsselnummer U38.5
U38.6	Nicht belegte Schlüsselnummer U38.6
U38.7	Nicht belegte Schlüsselnummer U38.7
U38.8	Nicht belegte Schlüsselnummer U38.8
U38.9	Nicht belegte Schlüsselnummer U38.9
U39.0	Nicht belegte Schlüsselnummer U39.0
U39.1	Nicht belegte Schlüsselnummer U39.1
U39.2	Nicht belegte Schlüsselnummer U39.2
U39.3	Nicht belegte Schlüsselnummer U39.3
U39.4	Nicht belegte Schlüsselnummer U39.4
U39.5	Nicht belegte Schlüsselnummer U39.5
U39.6	Nicht belegte Schlüsselnummer U39.6
U39.7	Nicht belegte Schlüsselnummer U39.7
U39.8	Nicht belegte Schlüsselnummer U39.8
U39.9	Nicht belegte Schlüsselnummer U39.9
U40.0	Nicht belegte Schlüsselnummer U40.0
U40.1	Nicht belegte Schlüsselnummer U40.1
U40.2	Nicht belegte Schlüsselnummer U40.2
U40.3	Nicht belegte Schlüsselnummer U40.3
U40.4	Nicht belegte Schlüsselnummer U40.4
U40.5	Nicht belegte Schlüsselnummer U40.5
U40.6	Nicht belegte Schlüsselnummer U40.6
U40.7	Nicht belegte Schlüsselnummer U40.7
U40.8	Nicht belegte Schlüsselnummer U40.8
U40.9	Nicht belegte Schlüsselnummer U40.9
U41.0	Nicht belegte Schlüsselnummer U41.0
U41.1	Nicht belegte Schlüsselnummer U41.1
U41.2	Nicht belegte Schlüsselnummer U41.2
U41.3	Nicht belegte Schlüsselnummer U41.3
U41.4	Nicht belegte Schlüsselnummer U41.4
U41.5	Nicht belegte Schlüsselnummer U41.5
U41.6	Nicht belegte Schlüsselnummer U41.6
U41.7	Nicht belegte Schlüsselnummer U41.7
U41.8	Nicht belegte Schlüsselnummer U41.8
U41.9	Nicht belegte Schlüsselnummer U41.9
U42.0	Nicht belegte Schlüsselnummer U42.0
U42.1	Nicht belegte Schlüsselnummer U42.1
U42.2	Nicht belegte Schlüsselnummer U42.2
U42.3	Nicht belegte Schlüsselnummer U42.3
U42.4	Nicht belegte Schlüsselnummer U42.4
U42.5	Nicht belegte Schlüsselnummer U42.5
U42.6	Nicht belegte Schlüsselnummer U42.6
U42.7	Nicht belegte Schlüsselnummer U42.7
U42.8	Nicht belegte Schlüsselnummer U42.8
U42.9	Nicht belegte Schlüsselnummer U42.9
U43.0	Nicht belegte Schlüsselnummer U43.0
U43.1	Nicht belegte Schlüsselnummer U43.1
U43.2	Nicht belegte Schlüsselnummer U43.2
U43.3	Nicht belegte Schlüsselnummer U43.3

Code	Beschreibung
U43.4	Nicht belegte Schlüsselnummer U43.4
U43.5	Nicht belegte Schlüsselnummer U43.5
U43.6	Nicht belegte Schlüsselnummer U43.6
U43.7	Nicht belegte Schlüsselnummer U43.7
U43.8	Nicht belegte Schlüsselnummer U43.8
U43.9	Nicht belegte Schlüsselnummer U43.9
U44.0	Nicht belegte Schlüsselnummer U44.0
U44.1	Nicht belegte Schlüsselnummer U44.1
U44.2	Nicht belegte Schlüsselnummer U44.2
U44.3	Nicht belegte Schlüsselnummer U44.3
U44.4	Nicht belegte Schlüsselnummer U44.4
U44.5	Nicht belegte Schlüsselnummer U44.5
U44.6	Nicht belegte Schlüsselnummer U44.6
U44.7	Nicht belegte Schlüsselnummer U44.7
U44.8	Nicht belegte Schlüsselnummer U44.8
U44.9	Nicht belegte Schlüsselnummer U44.9
U45.0	Nicht belegte Schlüsselnummer U45.0
U45.1	Nicht belegte Schlüsselnummer U45.1
U45.2	Nicht belegte Schlüsselnummer U45.2
U45.3	Nicht belegte Schlüsselnummer U45.3
U45.4	Nicht belegte Schlüsselnummer U45.4
U45.5	Nicht belegte Schlüsselnummer U45.5
U45.6	Nicht belegte Schlüsselnummer U45.6
U45.7	Nicht belegte Schlüsselnummer U45.7
U45.8	Nicht belegte Schlüsselnummer U45.8
U45.9	Nicht belegte Schlüsselnummer U45.9
U46.0	Nicht belegte Schlüsselnummer U46.0
U46.1	Nicht belegte Schlüsselnummer U46.1
U46.2	Nicht belegte Schlüsselnummer U46.2
U46.3	Nicht belegte Schlüsselnummer U46.3
U46.4	Nicht belegte Schlüsselnummer U46.4
U46.5	Nicht belegte Schlüsselnummer U46.5
U46.6	Nicht belegte Schlüsselnummer U46.6
U46.7	Nicht belegte Schlüsselnummer U46.7
U46.8	Nicht belegte Schlüsselnummer U46.8
U46.9	Nicht belegte Schlüsselnummer U46.9
U47.0	Nicht belegte Schlüsselnummer U47.0
U47.1	Nicht belegte Schlüsselnummer U47.1
U47.2	Nicht belegte Schlüsselnummer U47.2
U47.3	Nicht belegte Schlüsselnummer U47.3
U47.4	Nicht belegte Schlüsselnummer U47.4
U47.5	Nicht belegte Schlüsselnummer U47.5
U47.6	Nicht belegte Schlüsselnummer U47.6
U47.7	Nicht belegte Schlüsselnummer U47.7
U47.8	Nicht belegte Schlüsselnummer U47.8
U47.9	Nicht belegte Schlüsselnummer U47.9
U48.0	Nicht belegte Schlüsselnummer U48.0
U48.1	Nicht belegte Schlüsselnummer U48.1
U48.2	Nicht belegte Schlüsselnummer U48.2
U48.3	Nicht belegte Schlüsselnummer U48.3
U48.4	Nicht belegte Schlüsselnummer U48.4
U48.5	Nicht belegte Schlüsselnummer U48.5
U48.6	Nicht belegte Schlüsselnummer U48.6
U48.7	Nicht belegte Schlüsselnummer U48.7
U48.8	Nicht belegte Schlüsselnummer U48.8
U48.9	Nicht belegte Schlüsselnummer U48.9
U49.0	Nicht belegte Schlüsselnummer U49.0
U49.1	Nicht belegte Schlüsselnummer U49.1
U49.2	Nicht belegte Schlüsselnummer U49.2
U49.3	Nicht belegte Schlüsselnummer U49.3
U49.4	Nicht belegte Schlüsselnummer U49.4
U49.5	Nicht belegte Schlüsselnummer U49.5
U49.6	Nicht belegte Schlüsselnummer U49.6
U49.7	Nicht belegte Schlüsselnummer U49.7
U49.8	Nicht belegte Schlüsselnummer U49.8
U49.9	Nicht belegte Schlüsselnummer U49.9
U50.00	Keine oder geringe motorische Funktionseinschränkung: Barthel-Index: 100 Punkte

Code	Beschreibung
U50.01	Keine oder geringe motorische Funktionseinschränkung: Motorischer FIM: 85-91 Punkte
U50.10	Leichte motorische Funktionseinschränkung: Barthel-Index: 80-95 Punkte
U50.11	Leichte motorische Funktionseinschränkung: Motorischer FIM: 69-84 Punkte
U50.20	Mittlere motorische Funktionseinschränkung: Barthel-Index: 60-75 Punkte
U50.21	Mittlere motorische Funktionseinschränkung: Motorischer FIM: 59-68 Punkte
U50.30	Mittelschwere motorische Funktionseinschränkung: Barthel-Index: 40-55 Punkte
U50.31	Mittelschwere motorische Funktionseinschränkung: Motorischer FIM: 43-58 Punkte
U50.40	Schwere motorische Funktionseinschränkung: Barthel-Index: 20-35 Punkte
U50.41	Schwere motorische Funktionseinschränkung: Motorischer FIM: 31-42 Punkte
U50.50	Sehr schwere motorische Funktionseinschränkung: Barthel-Index: 0-15 Punkte
U50.51	Sehr schwere motorische Funktionseinschränkung: Motorischer FIM: 13-30 Punkte
U51.00	Keine oder leichte kognitive Funktionseinschränkung: Erweiterter Barthel-Index: 70-90 Punkte
U51.01	Keine oder leichte kognitive Funktionseinschränkung: Kognitiver FIM: 30-35 Punkte
U51.02	Keine oder leichte kognitive Funktionseinschränkung: MMSE: 24-30 Punkte
U51.10	Mittlere kognitive Funktionseinschränkung: Erweiterter Barthel-Index: 20-65 Punkte
U51.11	Mittlere kognitive Funktionseinschränkung: Kognitiver FIM: 11-29 Punkte
U51.12	Mittlere kognitive Funktionseinschränkung: MMSE: 17-23 Punkte
U51.20	Schwere kognitive Funktionseinschränkung: Erweiterter Barthel-Index: 0-15 Punkte
U51.21	Schwere kognitive Funktionseinschränkung: Kognitiver FIM: 5-10 Punkte
U51.22	Schwere kognitive Funktionseinschränkung: MMSE: 0-16 Punkte
U52.0	Frührehabilitations-Barthel-Index: 31 und mehr Punkte
U52.1	Frührehabilitations-Barthel-Index: -75 bis 30 Punkte
U52.2	Frührehabilitations-Barthel-Index: -200 bis -76 Punkte
U52.3	Frührehabilitations-Barthel-Index: weniger als -200 Punkte
U55.10	Erfolgte Registrierung zur Herztransplantation: Ohne Dringlichkeitsstufe U [Urgency] oder HU [High Urgency]
U55.11	Erfolgte Registrierung zur Herztransplantation: Mit Dringlichkeitsstufe U [Urgency]
U55.12	Erfolgte Registrierung zur Herztransplantation: Mit Dringlichkeitsstufe HU [High Urgency]
U55.20	Erfolgte Registrierung zur Lungentransplantation: Ohne Dringlichkeitsstufe U [Urgency] oder HU [High Urgency]
U55.21	Erfolgte Registrierung zur Lungentransplantation: Mit Dringlichkeitsstufe U [Urgency]
U55.22	Erfolgte Registrierung zur Lungentransplantation: Mit Dringlichkeitsstufe HU [High Urgency]
U55.30	Erfolgte Registrierung zur Herz-Lungen-Transplantation: Ohne Dringlichkeitsstufe U [Urgency] oder HU [High Urgency]
U55.31	Erfolgte Registrierung zur Herz-Lungen-Transplantation: Mit Dringlichkeitsstufe U [Urgency]
U55.32	Erfolgte Registrierung zur Herz-Lungen-Transplantation: Mit Dringlichkeitsstufe HU [High Urgency]
U60.1	Klinische Kategorien der HIV-Krankheit: Kategorie A
U60.2	Klinische Kategorien der HIV-Krankheit: Kategorie B
U60.3	Klinische Kategorien der HIV-Krankheit: Kategorie C
U60.9	Klinische Kategorie der HIV-Krankheit nicht näher bezeichnet
U61.1	Anzahl der T-Helferzellen bei HIV-Krankheit: Kategorie 1
U61.2	Anzahl der T-Helferzellen bei HIV-Krankheit: Kategorie 2
U61.3	Anzahl der T-Helferzellen bei HIV-Krankheit: Kategorie 3
U61.9	Anzahl der (CD4+-)T-Helferzellen nicht näher bezeichnet
U69.01	Anderenorts klassifizierte, im Krankenhaus erworbene Pneumonie, die mehr als 48 Stunden nach Aufnahme auftritt
U69.02	Anderenorts klassifizierte, im Krankenhaus erworbene Pneumonie, die entweder bei Aufnahme besteht oder innerhalb von 48 Stunden nach Aufnahme auftritt, bei bekannter, bis zu 28 Tage zurückliegender Hospitalisierung
U69.03	Anderenorts klassifizierte, im Krankenhaus erworbene Pneumonie, die entweder bei Aufnahme besteht oder innerhalb von 48 Stunden nach Aufnahme auftritt, bei bekannter, 29 bis zu 90 Tage zurückliegender Hospitalisierung
U69.10	Anderenorts klassifizierte Krankheit, für die der Verdacht besteht, dass sie Folge einer medizinisch nicht indizierten ästhetischen Operation, einer Tätowierung oder eines Piercings ist
U69.11	Dauerhaft erworbene Blutgerinnungsstörung
U69.12	Temporäre Blutgerinnungsstörung
U69.13	Herz-Kreislauf-Stillstand vor Aufnahme in das Krankenhaus
U69.20	Influenza A/H1N1 Pandemie 2009 [Schweinegrippe]
U69.21	Influenza A/H5N1 Epidemie [Vogelgrippe]
U69.30	Sekundäre Schlüsselnummern für die Art des Konsums psychotroper Substanzen bei durch diese verursachten psychischen und Verhaltensstörungen: Intravenöser Konsum von Heroin
U69.31	Sekundäre Schlüsselnummern für die Art des Konsums psychotroper Substanzen bei durch diese verursachten psychischen und Verhaltensstörungen: Nichtintravenöser Konsum von Heroin
U69.32	Sekundäre Schlüsselnummern für die Art des Konsums psychotroper Substanzen bei durch diese verursachten psychischen und Verhaltensstörungen:Intravenöser Konsum sonstiger psychotroper Substanzen
U69.33	Sekundäre Schlüsselnummern für die Art des Konsums psychotroper Substanzen bei durch diese verursachten psychischen und Verhaltensstörungen: Intravenöser Konsum (Meth-)Amphetamin-haltiger Stoffe
U69.34	Sekundäre Schlüsselnummern für die Art des Konsums psychotroper Substanzen bei durch diese verursachten psychischen und Verhaltensstörungen: Nichtintravenöser Konsum (Meth-)Amphetamin-haltiger Stoffe
U69.35	Sekundäre Schlüsselnummern für die Art des Konsums psychotroper Substanzen bei durch diese verursachten psychischen und Verhaltensstörungen: Intravenöser Konsum sonstiger Stimulanzien, außer Koffein

PDX

Code	Beschreibung
U69.36	Sekundäre Schlüsselnummern für die Art des Konsums psychotroper Substanzen bei durch diese verursachten psychischen und Verhaltensstörungen: Nichtintravenöser Konsum sonstiger Stimulanzien, außer Koffein
U69.40	Rekurrente Infektion mit Clostridium difficile
U69.50	Lymphknoten des Kopfes, des Gesichtes und des Halses
U69.51	Intrathorakale Lymphknoten
U69.52	Intraabdominale Lymphknoten
U69.53	Axilläre Lymphknoten und Lymphknoten der oberen Extremität
U69.54	Inguinale Lymphknoten und Lymphknoten der unteren Extremität
U69.55	Intrapelvine Lymphknoten
U69.6	Sekundäre Schlüsselnummer zur Spezifizierung eines Hustens als chronisch idiopathisch und chronisch refraktär
U80.00	Staphylococcus aureus mit Resistenz gegen Oxacillin oder Methicillin [MRSA]
U80.01	Staphylococcus aureus mit Resistenz gegen Glykopeptid-Antibiotika, Chinolone, Streptogramine oder Oxazolidinone und ohne Resistenz gegen Oxacillin oder Methicillin
U80.10	Streptococcus pneumoniae mit Resistenz gegen Penicillin oder Oxacillin
U80.11	Streptococcus pneumoniae mit Resistenz gegen Makrolid-Antibiotika, Oxazolidinone oder Streptogramine und ohne Resistenz gegen Penicillin oder Oxacillin
U80.20	Enterococcus faecalis mit Resistenz gegen Glykopeptid-Antibiotika
U80.21	Enterococcus faecalis mit Resistenz gegen Oxazolidinone oder mit High-Level-Aminoglykosid-Resistenz und ohne Resistenz gegen Glykopeptid-Antibiotika
U80.30	Enterococcus faecium mit Resistenz gegen Glykopeptid-Antibiotika
U80.31	Enterococcus faecium mit Resistenz gegen Oxazolidinone oder Streptogramine oder mit High-Level-Aminoglykosid-Resistenz und ohne Resistenz gegen Glykopeptid-Antibiotika
U80.8	Sonstige grampositive Bakterien mit Multiresistenz gegen Antibiotika
U81.00	Escherichia coli mit Multiresistenz 2MRGN NeoPäd
U81.01	Klebsiella pneumoniae mit Multiresistenz 2MRGN NeoPäd
U81.02	Klebsiella oxytoca mit Multiresistenz 2MRGN NeoPäd
U81.03	Sonstige Klebsiellen mit Multiresistenz 2MRGN NeoPäd
U81.04	Enterobacter-cloacae-Komplex mit Multiresistenz 2MRGN NeoPäd
U81.05	Citrobacter-freundii-Komplex mit Multiresistenz 2MRGN NeoPäd
U81.06	Serratia marcescens mit Multiresistenz 2MRGN NeoPäd
U81.07	Proteus mirabilis mit Multiresistenz 2MRGN NeoPäd
U81.08	Sonstige Enterobacterales mit Multiresistenz 2MRGN NeoPäd
U81.10	Pseudomonas aeruginosa mit Multiresistenz 2MRGN NeoPäd
U81.11	Acinetobacter-baumannii-Gruppe mit Multiresistenz 2MRGN NeoPäd
U81.20	Escherichia coli mit Multiresistenz 3MRGN
U81.21	Klebsiella pneumoniae mit Multiresistenz 3MRGN
U81.22	Klebsiella oxytoca mit Multiresistenz 3MRGN
U81.23	Sonstige Klebsiellen mit Multiresistenz 3MRGN
U81.24	Enterobacter-cloacae-Komplex mit Multiresistenz 3MRGN
U81.25	Citrobacter-freundii-Komplex mit Multiresistenz 3MRGN
U81.26	Serratia marcescens mit Multiresistenz 3MRGN
U81.27	Proteus mirabilis mit Multiresistenz 3MRGN
U81.28	Sonstige Enterobacterales mit Multiresistenz 3MRGN
U81.30	Pseudomonas aeruginosa mit Multiresistenz 3MRGN
U81.31	Acinetobacter-baumannii-Gruppe mit Multiresistenz 3MRGN
U81.40	Escherichia coli mit Multiresistenz 4MRGN
U81.41	Klebsiella pneumoniae mit Multiresistenz 4MRGN
U81.42	Klebsiella oxytoca mit Multiresistenz 4MRGN
U81.43	Sonstige Klebsiellen mit Multiresistenz 4MRGN
U81.44	Enterobacter-cloacae-Komplex mit Multiresistenz 4MRGN
U81.45	Citrobacter-freundii-Komplex mit Multiresistenz 4MRGN
U81.46	Serratia marcescens mit Multiresistenz 4MRGN
U81.47	Proteus mirabilis mit Multiresistenz 4MRGN
U81.48	Sonstige Enterobacterales mit Multiresistenz 4MRGN
U81.50	Pseudomonas aeruginosa mit Multiresistenz 4MRGN
U81.51	Acinetobacter-baumannii-Gruppe mit Multiresistenz 4MRGN
U81.6	Burkholderia, Stenotrophomonas und andere Nonfermenter mit Resistenz gegen Chinolone, Amikacin, Ceftazidim, Piperacillin/Tazobactam oder Cotrimoxazol
U81.8	Sonstige gramnegative Bakterien mit Multiresistenz gegen Antibiotika
U82.0	Mycobacterium tuberculosis mit Resistenz gegen ein oder mehrere Erstrangmedikamente
U82.1	Multi-Drug Resistant Tuberculosis [MDR-TB]
U82.2	Atypische Mykobakterien oder Nocardia mit Resistenz gegen ein oder mehrere Erstrangmedikamente
U83	Candida mit Resistenz gegen Fluconazol oder Voriconazol
U84	Herpesviren mit Resistenz gegen Virustatika
U85	Humanes Immundefizienz-Virus mit Resistenz gegen Virustatika oder Proteinaseinhibitoren
U98.0	Nicht belegte Schlüsselnummer U98.0!
U98.1	Nicht belegte Schlüsselnummer U98.1!
U98.2	Nicht belegte Schlüsselnummer U98.2!
U98.3	Nicht belegte Schlüsselnummer U98.3!
U98.4	Nicht belegte Schlüsselnummer U98.4!
U98.5	Nicht belegte Schlüsselnummer U98.5!
U98.6	Nicht belegte Schlüsselnummer U98.6!
U98.7	Nicht belegte Schlüsselnummer U98.7!
U98.8	Nicht belegte Schlüsselnummer U98.8!
U98.9	Nicht belegte Schlüsselnummer U98.9!
U99.0	Spezielle Verfahren zur Untersuchung auf SARS-CoV-2
U99.1	Nicht belegte Schlüsselnummer U99.1!
U99.2	Nicht belegte Schlüsselnummer U99.2!
U99.3	Nicht belegte Schlüsselnummer U99.3!
U99.4	Nicht belegte Schlüsselnummer U99.4!
U99.5	Nicht belegte Schlüsselnummer U99.5!
U99.6	Nicht belegte Schlüsselnummer U99.6!
U99.7	Nicht belegte Schlüsselnummer U99.7!
U99.8	Nicht belegte Schlüsselnummer U99.8!
U99.9	Nicht belegte Schlüsselnummer U99.9!
Z00.0	Ärztliche Allgemeinuntersuchung
Z00.1	Gesundheitsvorsorgeuntersuchung eines Kindes
Z00.2	Untersuchung aufgrund eines Wachstumsschubes in der Kindheit
Z00.3	Untersuchung aufgrund des Entwicklungsstandes während der Adoleszenz
Z00.4	Allgemeine psychiatrische Untersuchung, anderenorts nicht klassifiziert

Code	Beschreibung
Z00.6	Untersuchung von Personen zu Vergleichs- und Kontrollzwecken im Rahmen klinischer Forschungsprogramme
Z00.8	Sonstige Allgemeinuntersuchungen
Z01.6	Röntgenuntersuchung, anderenorts nicht klassifiziert
Z01.7	Laboruntersuchung
Z01.9	Spezielle Untersuchung, nicht näher bezeichnet
Z04.9	Untersuchung und Beobachtung aus nicht näher bezeichnetem Grund
Z21	Asymptomatische HIV-Infektion [Humane Immundefizienz-Virusinfektion]
Z32	Untersuchung und Test zur Feststellung einer Schwangerschaft
Z33	Schwangerschaftsfeststellung als Nebenbefund
Z34	Überwachung einer normalen Schwangerschaft
Z35.0	Überwachung einer Schwangerschaft bei Infertilitätsanamnese
Z35.1	Überwachung einer Schwangerschaft bei Abortanamnese
Z35.2	Überwachung einer Schwangerschaft bei sonstiger ungünstiger geburtshilflicher oder Reproduktionsanamnese
Z35.3	Überwachung einer Schwangerschaft mit ungenügender pränataler Betreuung in der Anamnese
Z35.4	Überwachung einer Schwangerschaft bei ausgeprägter Multiparität
Z35.5	Überwachung einer älteren Erstschwangeren
Z35.6	Überwachung einer sehr jungen Erstschwangeren
Z35.8	Überwachung sonstiger Risikoschwangerschaften
Z35.9	Überwachung einer Risikoschwangerschaft, nicht näher bezeichnet
Z37.0	Lebendgeborener Einling
Z37.1	Totgeborener Einling
Z37.2	Zwillinge, beide lebendgeboren
Z37.3	Zwillinge, ein Zwilling lebend-, der andere totgeboren
Z37.4	Zwillinge, beide totgeboren
Z37.5	Andere Mehrlinge, alle lebendgeboren
Z37.6	Andere Mehrlinge, einige lebendgeboren
Z37.7	Andere Mehrlinge, alle totgeboren
Z37.9	Resultat der Entbindung, nicht näher bezeichnet
Z44.8	Versorgen mit und Anpassen von sonstigen Ektoprothesen
Z44.9	Versorgen mit und Anpassen einer nicht näher bezeichneten Ektoprothese
Z47.0	Entfernung einer Metallplatte oder einer anderen inneren Fixationsvorrichtung
Z49.2	Sonstige Dialyse
Z50.0	Rehabilitationsmaßnahmen bei Herzkrankheit
Z50.1	Sonstige Physiotherapie
Z50.2	Rehabilitationsmaßnahmen bei Alkoholismus
Z50.3	Rehabilitationsmaßnahmen bei Arzneimittel- oder Drogenabhängigkeit
Z50.4	Psychotherapie, anderenorts nicht klassifiziert
Z50.5	Logopädische Behandlung [Therapie von Stimm-, Sprech- und Sprachstörungen]
Z50.6	Orthoptische Übungen [Sehschule]
Z50.7	Arbeitstherapie und berufliche Rehabilitationsmaßnahmen, anderenorts nicht klassifiziert
Z50.8	Sonstige Rehabilitationsmaßnahmen
Z50.9	Rehabilitationsmaßnahme, nicht näher bezeichnet
Z51.0	Strahlentherapie-Sitzung
Z51.1	Chemotherapie-Sitzung wegen bösartiger Neubildung
Z51.2	Andere Chemotherapie
Z51.3	Bluttransfusion ohne angegebene Diagnose
Z51.5	Palliativbehandlung
Z51.81	Apherese

Code	Beschreibung
Z51.82	Kombinierte Strahlen- und Chemotherapiesitzung wegen bösartiger Neubildung
Z52.00	Vollblutspender
Z54.0	Rekonvaleszenz nach chirurgischem Eingriff
Z54.1	Rekonvaleszenz nach Strahlentherapie
Z54.2	Rekonvaleszenz nach Chemotherapie
Z54.3	Rekonvaleszenz nach Psychotherapie
Z54.4	Rekonvaleszenz nach Frakturbehandlung
Z54.7	Rekonvaleszenz nach kombinierter Behandlung
Z54.8	Rekonvaleszenz nach sonstiger Behandlung
Z54.9	Rekonvaleszenz nach nicht näher bezeichneter Behandlung
Z55	Kontaktanlässe mit Bezug auf die Ausbildung
Z56	Kontaktanlässe mit Bezug auf das Berufsleben
Z57	Berufliche Exposition gegenüber Risikofaktoren
Z58	Kontaktanlässe mit Bezug auf die physikalische Umwelt
Z59	Kontaktanlässe mit Bezug auf das Wohnumfeld oder die wirtschaftliche Lage
Z60	Kontaktanlässe mit Bezug auf die soziale Umgebung
Z61	Kontaktanlässe mit Bezug auf Kindheitserlebnisse
Z62	Andere Kontaktanlässe mit Bezug auf die Erziehung
Z63	Andere Kontaktanlässe mit Bezug auf den engeren Familienkreis
Z64.0	Kontaktanlässe mit Bezug auf eine unerwünschte Schwangerschaft
Z64.8	Sonstige Kontaktanlässe mit Bezug auf bestimmte psychosoziale Umstände
Z70	Beratung in Bezug auf Sexualeinstellung, -verhalten oder -orientierung
Z72.0	Probleme mit Bezug auf: Konsum von Alkohol, Tabak, Arzneimitteln oder Drogen
Z75.2	Wartezeit auf eine Untersuchung oder Behandlung
Z75.60	Erfolgte Registrierung zur Organtransplantation ohne Dringlichkeitsstufe HU (High Urgency): Niere
Z75.64	Erfolgte Registrierung zur Organtransplantation ohne Dringlichkeitsstufe HU (High Urgency): Niere-Pankreas
Z75.65	Erfolgte Registrierung zur Organtransplantation ohne Dringlichkeitsstufe HU (High Urgency): Pankreas
Z75.66	Erfolgte Registrierung zur Organtransplantation ohne Dringlichkeitsstufe HU (High Urgency): Dünndarm
Z75.67	Erfolgte Registrierung zur Organtransplantation ohne Dringlichkeitsstufe HU (High Urgency): Leber
Z75.68	Erfolgte Registrierung zur Organtransplantation ohne Dringlichkeitsstufe HU (High Urgency): Sonstige Organe
Z75.69	Erfolgte Registrierung zur Organtransplantation ohne Dringlichkeitsstufe HU (High Urgency): Nicht näher bezeichnetes Organ
Z75.70	Erfolgte Registrierung zur Organtransplantation mit Dringlichkeitsstufe HU (High Urgency): Niere
Z75.74	Erfolgte Registrierung zur Organtransplantation mit Dringlichkeitsstufe HU (High Urgency): Niere-Pankreas
Z75.75	Erfolgte Registrierung zur Organtransplantation mit Dringlichkeitsstufe HU (High Urgency): Pankreas
Z75.76	Erfolgte Registrierung zur Organtransplantation mit Dringlichkeitsstufe HU (High Urgency): Dünndarm
Z75.77	Erfolgte Registrierung zur Organtransplantation mit Dringlichkeitsstufe HU (High Urgency): Leber
Z75.78	Erfolgte Registrierung zur Organtransplantation mit Dringlichkeitsstufe HU (High Urgency): Sonstige Organe
Z75.79	Erfolgte Registrierung zur Organtransplantation mit Dringlichkeitsstufe HU (High Urgency): Nicht näher bezeichnetes Organ

Code	Beschreibung
Z75.8	Sonstige Probleme mit Bezug auf medizinische Betreuungsmöglichkeiten oder andere Gesundheitsversorgung
Z75.9	Nicht näher bezeichnetes Problem mit Bezug auf medizinische Betreuungsmöglichkeiten oder andere Gesundheitsversorgung
Z76.3	Gesunde Begleitperson einer kranken Person
Z85.0	Bösartige Neubildung der Verdauungsorgane in der Eigenanamnese
Z85.1	Bösartige Neubildung der Trachea, der Bronchien oder der Lunge in der Eigenanamnese
Z85.2	Bösartige Neubildung anderer Atmungs- und intrathorakaler Organe in der Eigenanamnese
Z85.3	Bösartige Neubildung der Brustdrüse [Mamma] in der Eigenanamnese
Z85.4	Bösartige Neubildung der Genitalorgane in der Eigenanamnese
Z85.5	Bösartige Neubildung der Harnorgane in der Eigenanamnese
Z85.6	Leukämie in der Eigenanamnese
Z85.7	Andere bösartige Neubildungen des lymphatischen, blutbildenden oder verwandten Gewebes in der Eigenanamnese
Z85.8	Bösartige Neubildungen sonstiger Organe oder Systeme in der Eigenanamnese
Z85.9	Bösartige Neubildung in der Eigenanamnese, nicht näher bezeichnet
Z86.0	Andere Neubildungen in der Eigenanamnese
Z86.1	Infektiöse oder parasitäre Krankheiten in der Eigenanamnese
Z86.2	Krankheiten des Blutes und der blutbildenden Organe sowie bestimmte Störungen mit Beteiligung des Immunsystems in der Eigenanamnese
Z86.3	Endokrine, Ernährungs- oder Stoffwechselkrankheiten in der Eigenanamnese
Z86.4	Missbrauch einer psychotropen Substanz in der Eigenanamnese
Z86.5	Andere psychische Krankheiten oder Verhaltensstörungen in der Eigenanamnese
Z86.6	Krankheiten des Nervensystems oder der Sinnesorgane in der Eigenanamnese
Z86.7	Krankheiten des Kreislaufsystems in der Eigenanamnese
Z87.0	Krankheiten des Atmungssystems in der Eigenanamnese
Z87.1	Krankheiten des Verdauungssystems in der Eigenanamnese
Z87.2	Krankheiten der Haut und der Unterhaut in der Eigenanamnese
Z87.3	Krankheiten des Muskel-Skelett-Systems und des Bindegewebes in der Eigenanamnese
Z87.4	Krankheiten des Urogenitalsystems in der Eigenanamnese
Z87.5	Komplikationen der Schwangerschaft, der Geburt und des Wochenbettes in der Eigenanamnese
Z87.6	Bestimmte in der Perinatalperiode entstandene Zustände in der Eigenanamnese
Z87.7	Angeborene Fehlbildungen, Deformitäten oder Chromosomenanomalien in der Eigenanamnese
Z87.8	Sonstige näher bezeichnete Krankheiten oder Zustände in der Eigenanamnese
Z88.0	Allergie gegenüber Penicillin in der Eigenanamnese
Z88.1	Allergie gegenüber anderen Antibiotika in der Eigenanamnese
Z88.2	Allergie gegenüber Sulfonamiden in der Eigenanamnese
Z88.3	Allergie gegenüber anderen Antiinfektiva in der Eigenanamnese
Z88.4	Allergie gegenüber Anästhetikum in der Eigenanamnese

Code	Beschreibung
Z88.5	Allergie gegenüber Betäubungsmittel in der Eigenanamnese
Z88.6	Allergie gegenüber Analgetikum in der Eigenanamnese
Z88.7	Allergie gegenüber Serum oder Impfstoff in der Eigenanamnese
Z88.8	Allergie gegenüber sonstigen Arzneimitteln, Drogen oder biologisch aktiven Substanzen in der Eigenanamnese
Z88.9	Allergie gegenüber nicht näher bezeichneten Arzneimitteln, Drogen oder biologisch aktiven Substanzen in der Eigenanamnese
Z89.0	Verlust eines oder mehrerer Finger [einschließlich Daumen], einseitig
Z89.1	Verlust der Hand und des Handgelenkes, einseitig
Z89.2	Verlust der oberen Extremität oberhalb des Handgelenkes, einseitig
Z89.3	(Teilweiser) Verlust der oberen Extremität, beidseitig
Z89.4	Verlust des Fußes und des Knöchels, einseitig
Z89.5	Verlust der unteren Extremität unterhalb oder bis zum Knie, einseitig
Z89.6	Verlust der unteren Extremität oberhalb des Knies, einseitig
Z89.7	(Teilweiser) Verlust der unteren Extremität, beidseitig
Z89.8	Verlust von oberen und unteren Extremitäten [jede Höhe]
Z89.9	Extremitätenverlust, nicht näher bezeichnet
Z90.0	Verlust von Teilen des Kopfes oder des Halses
Z90.1	Verlust der Mamma(e) [Brustdrüse]
Z90.2	Verlust der Lunge [Teile der Lunge]
Z90.3	Verlust von Teilen des Magens
Z90.4	Verlust anderer Teile des Verdauungstraktes
Z90.5	Verlust der Niere(n)
Z90.6	Verlust anderer Teile des Harntraktes
Z90.7	Verlust eines oder mehrerer Genitalorgane
Z90.8	Verlust sonstiger Organe
Z91.0	Allergie, ausgenommen Allergie gegenüber Arzneimitteln, Drogen oder biologisch aktiven Substanzen, in der Eigenanamnese
Z91.1	Nichtbefolgung ärztlicher Anordnungen [Non-compliance] in der Eigenanamnese
Z91.8	Sonstige näher bezeichnete Risikofaktoren in der Eigenanamnese, anderenorts nicht klassifiziert
Z92.1	Dauertherapie (gegenwärtig) mit Antikoagulanzien in der Eigenanamnese
Z92.2	Dauertherapie (gegenwärtig) mit anderen Arzneimitteln in der Eigenanamnese
Z92.3	Bestrahlung in der Eigenanamnese
Z92.4	Größerer operativer Eingriff in der Eigenanamnese, anderenorts nicht klassifiziert
Z92.6	Zytostatische Chemotherapie wegen bösartiger Neubildung in der Eigenanamnese
Z92.8	Sonstige medizinische Behandlung in der Eigenanamnese
Z92.9	Medizinische Behandlung, nicht näher bezeichnet, in der Eigenanamnese
Z93.0	Vorhandensein eines Tracheostomas
Z93.1	Vorhandensein eines Gastrostomas
Z93.2	Vorhandensein eines Ileostomas
Z93.3	Vorhandensein eines Kolostomas
Z93.4	Vorhandensein anderer künstlicher Körperöffnungen des Magen-Darm-Trakts
Z93.5	Vorhandensein eines Zystostomas
Z93.6	Vorhandensein anderer künstlicher Körperöffnungen der Harnwege
Z93.80	Vorhandensein eines Thorakostomas
Z93.88	Vorhandensein sonstiger künstlicher Körperöffnungen

Code	Beschreibung
Z93.9	Vorhandensein einer künstlichen Körperöffnung, nicht näher bezeichnet
Z95.0	Vorhandensein eines kardialen elektronischen Geräts
Z95.1	Vorhandensein eines aortokoronaren Bypasses
Z95.2	Vorhandensein einer künstlichen Herzklappe
Z95.3	Vorhandensein einer xenogenen Herzklappe
Z95.4	Vorhandensein eines anderen Herzklappenersatzes
Z95.5	Vorhandensein eines Implantates oder Transplantates nach koronarer Gefäßplastik
Z95.80	Vorhandensein eines herzunterstützenden Systems
Z95.81	Vorhandensein eines operativ implantierten vaskulären Katheterverweilsystems
Z95.88	Vorhandensein von sonstigen kardialen oder vaskulären Implantaten oder Transplantaten
Z95.9	Vorhandensein von kardialem oder vaskulärem Implantat oder Transplantat, nicht näher bezeichnet
Z96.0	Vorhandensein von urogenitalen Implantaten
Z96.1	Vorhandensein eines intraokularen Linsenimplantates
Z96.2	Vorhandensein von Implantaten im Gehörorgan
Z96.3	Vorhandensein eines künstlichen Larynx
Z96.4	Vorhandensein von endokrinen Implantaten
Z96.5	Vorhandensein von Zahnwurzel- oder Unterkieferimplantaten
Z96.60	Vorhandensein einer Schulterprothese
Z96.61	Vorhandensein einer Ellenbogenprothese
Z96.62	Vorhandensein einer Radiuskopfprothese
Z96.63	Vorhandensein einer Handgelenkprothese
Z96.64	Vorhandensein einer Hüftgelenkprothese
Z96.65	Vorhandensein einer Kniegelenkprothese
Z96.66	Vorhandensein einer Sprunggelenkprothese
Z96.67	Vorhandensein einer Bandscheibenprothese

Code	Beschreibung
Z96.68	Vorhandensein von sonstigen näher bezeichneten orthopädischen Gelenkimplantaten
Z96.7	Vorhandensein von anderen Knochen- und Sehnenimplantaten
Z96.80	Vorhandensein eines Bronchialstents
Z96.81	Vorhandensein eines Trachealstents
Z96.88	Vorhandensein von sonstigen näher bezeichneten funktionellen Implantaten
Z96.9	Vorhandensein eines funktionellen Implantates, nicht näher bezeichnet
Z97.1	Vorhandensein einer künstlichen Extremität (komplett) (partiell)
Z97.8	Vorhandensein sonstiger und nicht näher bezeichneter medizinischer Geräte oder Hilfsmittel
Z98.0	Zustand nach intestinalem Bypass oder intestinaler Anastomose
Z98.1	Zustand nach Arthrodese
Z98.2	Vorhandensein einer Drainage des Liquor cerebrospinalis
Z98.8	Sonstige näher bezeichnete Zustände nach chirurgischen Eingriffen
Z99.0	Abhängigkeit (langzeitig) vom Aspirator
Z99.1	Abhängigkeit (langzeitig) vom Respirator
Z99.2	Langzeitige Abhängigkeit von Dialyse bei Niereninsuffizienz
Z99.3	Langzeitige Abhängigkeit vom Rollstuhl
Z99.4	Langzeitige Abhängigkeit vom Kunstherz
Z99.8	Langzeitige Abhängigkeit von sonstigen unterstützenden Apparaten, medizinischen Geräten oder Hilfsmitteln
Z99.9	Langzeitige Abhängigkeit von einem nicht näher bezeichneten unterstützenden Apparat, medizinischen Gerät oder Hilfsmittel

Tabelle D.6a Alterskonflikt - Säugling

Code	Beschreibung
A33	Tetanus neonatorum
P00.0	Schädigung des Fetus und Neugeborenen durch hypertensive Krankheiten der Mutter
P00.1	Schädigung des Fetus und Neugeborenen durch Nieren- und Harnwegskrankheiten der Mutter
P00.2	Schädigung des Fetus und Neugeborenen durch infektiöse und parasitäre Krankheiten der Mutter
P00.3	Schädigung des Fetus und Neugeborenen durch sonstige Kreislauf- und Atemwegskrankheiten der Mutter
P00.4	Schädigung des Fetus und Neugeborenen durch Ernährungsstörung der Mutter
P00.5	Schädigung des Fetus und Neugeborenen durch Verletzung der Mutter
P00.6	Schädigung des Fetus und Neugeborenen durch chirurgischen Eingriff bei der Mutter
P00.7	Schädigung des Fetus und Neugeborenen durch sonstige medizinische Maßnahmen bei der Mutter, anderenorts nicht klassifiziert
P00.8	Schädigung des Fetus und Neugeborenen durch sonstige Zustände der Mutter
P00.9	Schädigung des Fetus und Neugeborenen durch nicht näher bezeichneten Zustand der Mutter
P01.0	Schädigung des Fetus und Neugeborenen durch Zervixinsuffizienz
P01.1	Schädigung des Fetus und Neugeborenen durch vorzeitigen Blasensprung
P01.2	Schädigung des Fetus und Neugeborenen durch Oligohydramnion
P01.3	Schädigung des Fetus und Neugeborenen durch Polyhydramnion
P01.4	Schädigung des Fetus und Neugeborenen bei Extrauteringravidität
P01.5	Schädigung des Fetus und Neugeborenen bei Mehrlingsschwangerschaft
P01.6	Schädigung des Fetus und Neugeborenen durch Tod der Mutter
P01.7	Schädigung des Fetus und Neugeborenen durch Lageanomalie vor Wehenbeginn
P01.8	Schädigung des Fetus und Neugeborenen durch sonstige mütterliche Schwangerschaftskomplikationen
P01.9	Schädigung des Fetus und Neugeborenen durch mütterliche Schwangerschaftskomplikation, nicht näher bezeichnet
P02.0	Schädigung des Fetus und Neugeborenen durch Placenta praevia
P02.1	Schädigung des Fetus und Neugeborenen durch sonstige Formen der Plazentalösung und -blutung
P02.2	Schädigung des Fetus und Neugeborenen durch sonstige und nicht näher bezeichnete morphologische und funktionelle Plazentaanomalien
P02.3	Schädigung des Fetus und Neugeborenen durch transplazentare Transfusionssyndrome
P02.4	Schädigung des Fetus und Neugeborenen durch Nabelschnurvorfall
P02.5	Schädigung des Fetus und Neugeborenen durch sonstige Formen der Nabelschnurkompression
P02.6	Schädigung des Fetus und Neugeborenen durch sonstige und nicht näher bezeichnete Zustände der Nabelschnur
P02.7	Schädigung des Fetus und Neugeborenen durch Chorioamnionitis
P02.8	Schädigung des Fetus und Neugeborenen durch sonstige Anomalien der Eihäute
P02.9	Schädigung des Fetus und Neugeborenen durch Anomalie der Eihäute, nicht näher bezeichnet
P03.0	Schädigung des Fetus und Neugeborenen durch Entbindung und Extraktion aus Beckenendlage
P03.1	Schädigung des Fetus und Neugeborenen durch sonstige Lage-, Haltungs- und Einstellungsanomalien sowie Missverhältnis während Wehen und Entbindung
P03.2	Schädigung des Fetus und Neugeborenen durch Zangenentbindung
P03.3	Schädigung des Fetus und Neugeborenen durch Entbindung mittels Vakuumextraktors [Saugglocke]
P03.4	Schädigung des Fetus und Neugeborenen durch Schnittentbindung
P03.5	Schädigung des Fetus und Neugeborenen durch überstürzte Geburt
P03.6	Schädigung des Fetus und Neugeborenen durch abnorme Uteruskontraktionen
P03.8	Schädigung des Fetus und Neugeborenen durch sonstige näher bezeichnete Komplikationen bei Wehen und Entbindung
P03.9	Schädigung des Fetus und Neugeborenen durch Komplikation bei Wehen und Entbindung, nicht näher bezeichnet
P04.0	Schädigung des Fetus und Neugeborenen durch Anästhesie und Analgesie bei der Mutter während Schwangerschaft, Wehen und Entbindung
P04.1	Schädigung des Fetus und Neugeborenen durch sonstige Medikation bei der Mutter
P04.2	Schädigung des Fetus und Neugeborenen durch Tabakkonsum der Mutter
P04.3	Schädigung des Fetus und Neugeborenen durch Alkoholkonsum der Mutter
P04.4	Schädigung des Fetus und Neugeborenen durch Einnahme von abhängigkeitserzeugenden Arzneimitteln oder Drogen durch die Mutter
P04.5	Schädigung des Fetus und Neugeborenen durch chemische Substanzen, die mit der Nahrung der Mutter aufgenommen wurden
P04.6	Schädigung des Fetus und Neugeborenen durch Exposition der Mutter gegenüber chemischen Substanzen aus der Umwelt
P04.8	Schädigungen des Fetus und Neugeborenen durch sonstige Noxen, von der Mutter übertragen
P04.9	Schädigung des Fetus und Neugeborenen durch nicht näher bezeichnete Noxen, von der Mutter übertragen
P05.0	Für das Gestationsalter zu leichte Neugeborene
P05.1	Für das Gestationsalter zu kleine Neugeborene
P05.2	Fetale Mangelernährung des Neugeborenen ohne Angabe von zu leicht oder zu klein für das Gestationsalter [light or small for gestational age]
P05.9	Intrauterine Mangelentwicklung, nicht näher bezeichnet
P07.00	Neugeborenes: Geburtsgewicht unter 500 Gramm
P07.01	Neugeborenes: Geburtsgewicht 500 bis unter 750 Gramm
P07.02	Neugeborenes: Geburtsgewicht 750 bis unter 1000 Gramm
P07.10	Neugeborenes: Geburtsgewicht 1000 bis unter 1250 Gramm
P07.11	Neugeborenes: Geburtsgewicht 1250 bis unter 1500 Gramm
P07.12	Neugeborenes: Geburtsgewicht 1500 bis unter 2500 Gramm
P07.2	Neugeborenes mit extremer Unreife

Code	Beschreibung
P07.3	Sonstige vor dem Termin Geborene
P08.0	Übergewichtige Neugeborene
P08.1	Sonstige für das Gestationsalter zu schwere Neugeborene
P08.2	Nach dem Termin Geborenes, nicht zu schwer für das Gestationsalter
P10.0	Subdurale Blutung durch Geburtsverletzung
P10.1	Zerebrale Blutung durch Geburtsverletzung
P10.2	Intraventrikuläre Blutung durch Geburtsverletzung
P10.3	Subarachnoidale Blutung durch Geburtsverletzung
P10.4	Tentoriumriss durch Geburtsverletzung
P10.8	Sonstige intrakranielle Verletzungen und Blutungen durch Geburtsverletzung
P10.9	Nicht näher bezeichnete intrakranielle Verletzung und Blutung durch Geburtsverletzung
P11.0	Hirnödem durch Geburtsverletzung
P11.1	Sonstige näher bezeichnete Hirnschädigung durch Geburtsverletzung
P11.2	Nicht näher bezeichnete Hirnschädigung durch Geburtsverletzung
P11.3	Geburtsverletzung des N. facialis [VII. Hirnnerv]
P11.4	Geburtsverletzung sonstiger Hirnnerven
P11.50	Geburtsverletzung der Wirbelsäule und des Rückenmarkes: Mit akuter Querschnittlähmung
P11.51	Geburtsverletzung der Wirbelsäule und des Rückenmarkes: Mit chronischer Querschnittlähmung
P11.59	Geburtsverletzung der Wirbelsäule und des Rückenmarkes: Nicht näher bezeichnet
P11.9	Geburtsverletzung des Zentralnervensystems, nicht näher bezeichnet
P12.0	Kephalhämatom durch Geburtsverletzung
P12.1	Geburtsgeschwulst durch Geburtsverletzung
P12.2	Epikranielle subaponeurotische Blutung durch Geburtsverletzung
P12.3	Quetschwunde der behaarten Kopfhaut durch Geburtsverletzung
P12.4	Überwachungsbedingte Verletzung der behaarten Kopfhaut beim Neugeborenen
P12.8	Sonstige Geburtsverletzungen der behaarten Kopfhaut
P12.9	Geburtsverletzung der behaarten Kopfhaut, nicht näher bezeichnet
P13.0	Fraktur des Schädels durch Geburtsverletzung
P13.1	Sonstige Geburtsverletzung des Schädels
P13.2	Geburtsverletzung des Femurs
P13.3	Geburtsverletzung sonstiger Röhrenknochen
P13.4	Klavikulafraktur durch Geburtsverletzung
P13.8	Geburtsverletzungen an sonstigen Teilen des Skeletts
P13.9	Geburtsverletzung des Skeletts, nicht näher bezeichnet
P14.0	Erb-Lähmung durch Geburtsverletzung
P14.1	Klumpke-Lähmung durch Geburtsverletzung
P14.2	Lähmung des N. phrenicus durch Geburtsverletzung
P14.3	Sonstige Geburtsverletzungen des Plexus brachialis
P14.8	Geburtsverletzungen sonstiger Teile des peripheren Nervensystems
P14.9	Geburtsverletzung des peripheren Nervensystems, nicht näher bezeichnet
P15.0	Geburtsverletzung der Leber
P15.1	Geburtsverletzung der Milz
P15.2	Verletzung des M. sternocleidomastoideus durch Geburtsverletzung
P15.3	Geburtsverletzung des Auges
P15.4	Geburtsverletzung des Gesichtes
P15.5	Geburtsverletzung der äußeren Genitalorgane
P15.6	Adiponecrosis subcutanea neonatorum durch Geburtsverletzung
P15.8	Sonstige näher bezeichnete Geburtsverletzungen
P15.9	Geburtsverletzung, nicht näher bezeichnet

Code	Beschreibung
P20.0	Intrauterine Hypoxie, erstmals vor Wehenbeginn festgestellt
P20.1	Intrauterine Hypoxie, erstmals während Wehen und Entbindung festgestellt
P20.9	Intrauterine Hypoxie, nicht näher bezeichnet
P21.0	Schwere Asphyxie unter der Geburt
P21.1	Leichte oder mäßige Asphyxie unter der Geburt
P21.9	Asphyxie unter der Geburt, nicht näher bezeichnet
P22.0	Atemnotsyndrom [Respiratory distress syndrome] des Neugeborenen
P22.1	Transitorische Tachypnoe beim Neugeborenen
P22.8	Sonstige Atemnot [Respiratory distress] beim Neugeborenen
P22.9	Atemnot [Respiratory distress] beim Neugeborenen, nicht näher bezeichnet
P23.0	Angeborene Pneumonie durch Viren
P23.1	Angeborene Pneumonie durch Chlamydien
P23.2	Angeborene Pneumonie durch Staphylokokken
P23.3	Angeborene Pneumonie durch Streptokokken, Gruppe B
P23.4	Angeborene Pneumonie durch Escherichia coli
P23.5	Angeborene Pneumonie durch Pseudomonasarten
P23.6	Angeborene Pneumonie durch sonstige Bakterien
P23.8	Angeborene Pneumonie durch sonstige Erreger
P23.9	Angeborene Pneumonie, nicht näher bezeichnet
P24.0	Mekoniumaspiration durch das Neugeborene
P24.1	Fruchtwasser- und Schleimaspiration durch das Neugeborene
P24.2	Blutaspiration durch das Neugeborene
P24.3	Aspiration von Milch und regurgitierter Nahrung durch das Neugeborene
P24.8	Sonstige Aspirationssyndrome beim Neugeborenen
P24.9	Aspirationssyndrom beim Neugeborenen, nicht näher bezeichnet
P25.0	Interstitielles Emphysem mit Ursprung in der Perinatalperiode
P25.1	Pneumothorax mit Ursprung in der Perinatalperiode
P25.2	Pneumomediastinum mit Ursprung in der Perinatalperiode
P25.3	Pneumoperikard mit Ursprung in der Perinatalperiode
P25.8	Sonstige Zustände in Verbindung mit interstitiellem Emphysem mit Ursprung in der Perinatalperiode
P26.0	Tracheobronchiale Blutung mit Ursprung in der Perinatalperiode
P26.1	Massive Lungenblutung mit Ursprung in der Perinatalperiode
P26.8	Sonstige Lungenblutung mit Ursprung in der Perinatalperiode
P26.9	Nicht näher bezeichnete Lungenblutung mit Ursprung in der Perinatalperiode
P27.0	Mikity-Wilson-Syndrom
P27.1	Bronchopulmonale Dysplasie mit Ursprung in der Perinatalperiode
P27.8	Sonstige chronische Atemwegskrankheiten mit Ursprung in der Perinatalperiode
P27.9	Nicht näher bezeichnete chronische Atemwegskrankheit mit Ursprung in der Perinatalperiode
P28.0	Primäre Atelektase beim Neugeborenen
P28.1	Sonstige und nicht näher bezeichnete Atelektase beim Neugeborenen
P28.2	Zyanoseanfälle beim Neugeborenen
P28.3	Primäre Schlafapnoe beim Neugeborenen
P28.4	Sonstige Apnoe beim Neugeborenen
P28.5	Respiratorisches Versagen beim Neugeborenen
P28.8	Sonstige näher bezeichnete Störungen der Atmung beim Neugeborenen
P28.9	Störung der Atmung beim Neugeborenen, nicht näher bezeichnet

Code	Beschreibung
P29.0	Herzinsuffizienz beim Neugeborenen
P29.1	Herzrhythmusstörung beim Neugeborenen
P29.2	Hypertonie beim Neugeborenen
P29.3	Persistierender Fetalkreislauf
P29.4	Transitorische Myokardischämie beim Neugeborenen
P29.8	Sonstige kardiovaskuläre Krankheiten mit Ursprung in der Perinatalperiode
P29.9	Kardiovaskuläre Krankheit mit Ursprung in der Perinatalperiode, nicht näher bezeichnet
P36.0	Sepsis beim Neugeborenen durch Streptokokken, Gruppe B
P36.1	Sepsis beim Neugeborenen durch sonstige und nicht näher bezeichnete Streptokokken
P36.2	Sepsis beim Neugeborenen durch Staphylococcus aureus
P36.3	Sepsis beim Neugeborenen durch sonstige und nicht näher bezeichnete Staphylokokken
P36.4	Sepsis beim Neugeborenen durch Escherichia coli
P36.5	Sepsis beim Neugeborenen durch Anaerobier
P36.8	Sonstige bakterielle Sepsis beim Neugeborenen
P36.9	Bakterielle Sepsis beim Neugeborenen, nicht näher bezeichnet
P37.0	Angeborene Tuberkulose
P37.1	Angeborene Toxoplasmose
P37.2	Neugeborenenlisteriose (disseminiert)
P37.3	Angeborene Malaria tropica
P37.4	Sonstige angeborene Malaria
P37.5	Kandidose beim Neugeborenen
P37.8	Sonstige näher bezeichnete angeborene infektiöse und parasitäre Krankheiten
P37.9	Angeborene infektiöse oder parasitäre Krankheit, nicht näher bezeichnet
P38	Omphalitis beim Neugeborenen mit oder ohne leichte Blutung
P39.0	Infektiöse Mastitis beim Neugeborenen
P39.1	Konjunktivitis und Dakryozystitis beim Neugeborenen
P39.2	Intraamniale Infektion des Fetus, anderenorts nicht klassifiziert
P39.3	Harnwegsinfektion beim Neugeborenen
P39.4	Hautinfektion beim Neugeborenen
P39.8	Sonstige näher bezeichnete Infektionen, die für die Perinatalperiode spezifisch sind
P39.9	Infektion, die für die Perinatalperiode spezifisch ist, nicht näher bezeichnet
P50.0	Fetaler Blutverlust bei Insertio velamentosa [Vasa praevia]
P50.1	Fetaler Blutverlust aus der rupturierten Nabelschnur
P50.2	Fetaler Blutverlust aus der Plazenta
P50.3	Blutung in den anderen Mehrling (fetofetal)
P50.4	Blutung in den Kreislauf der Mutter (fetomaternal)
P50.5	Fetaler Blutverlust aus dem durchtrennten Ende der Nabelschnur eines anderen Mehrlings
P50.8	Sonstiger fetaler Blutverlust
P50.9	Fetaler Blutverlust, nicht näher bezeichnet
P51.0	Massive Nabelblutung beim Neugeborenen
P51.8	Sonstige Nabelblutungen beim Neugeborenen
P51.9	Nabelblutung beim Neugeborenen, nicht näher bezeichnet
P52.0	Intraventrikuläre (nichttraumatische) Blutung 1. Grades beim Fetus und Neugeborenen
P52.1	Intraventrikuläre (nichttraumatische) Blutung 2. Grades beim Fetus und Neugeborenen
P52.2	Intraventrikuläre (nichttraumatische) Blutung 3. Grades beim Fetus und Neugeborenen
P52.3	Nicht näher bezeichnete intraventrikuläre (nichttraumatische) Blutung beim Fetus und Neugeborenen

Code	Beschreibung
P52.4	Intrazerebrale (nichttraumatische) Blutung beim Fetus und Neugeborenen
P52.5	Subarachnoidalblutung (nichttraumatisch) beim Fetus und Neugeborenen
P52.6	Kleinhirnblutung (nichttraumatisch) und Blutung in die Fossa cranii posterior beim Fetus und Neugeborenen
P52.8	Sonstige intrakranielle (nichttraumatische) Blutungen beim Fetus und Neugeborenen
P52.9	Intrakranielle (nichttraumatische) Blutung beim Fetus und Neugeborenen, nicht näher bezeichnet
P53	Hämorrhagische Krankheit beim Fetus und Neugeborenen
P54.0	Hämatemesis beim Neugeborenen
P54.1	Meläna beim Neugeborenen
P54.2	Rektumblutung beim Neugeborenen
P54.3	Sonstige gastrointestinale Blutung beim Neugeborenen
P54.4	Nebennierenblutung beim Neugeborenen
P54.5	Hautblutung beim Neugeborenen
P54.6	Blutung aus der Vagina beim Neugeborenen
P54.8	Sonstige näher bezeichnete Blutungen beim Neugeborenen
P54.9	Blutung beim Neugeborenen, nicht näher bezeichnet
P55.0	Rh-Isoimmunisierung beim Fetus und Neugeborenen
P55.1	AB0-Isoimmunisierung beim Fetus und Neugeborenen
P55.8	Sonstige hämolytische Krankheiten beim Fetus und Neugeborenen
P55.9	Hämolytische Krankheit beim Fetus und Neugeborenen, nicht näher bezeichnet
P56.0	Hydrops fetalis durch Isoimmunisierung
P56.9	Hydrops fetalis durch sonstige und nicht näher bezeichnete hämolytische Krankheit
P57.0	Kernikterus durch Isoimmunisierung
P57.8	Sonstiger näher bezeichneter Kernikterus
P57.9	Kernikterus, nicht näher bezeichnet
P58.0	Neugeborenenikterus durch Quetschwunde
P58.1	Neugeborenenikterus durch Blutung
P58.2	Neugeborenenikterus durch Infektion
P58.3	Neugeborenenikterus durch Polyglobulie
P58.4	Neugeborenenikterus durch Arzneimittel oder Toxine, die von der Mutter übertragen oder dem Neugeborenen verabreicht wurden
P58.5	Neugeborenenikterus durch Verschlucken mütterlichen Blutes
P58.8	Neugeborenenikterus durch sonstige näher bezeichnete gesteigerte Hämolyse
P58.9	Neugeborenenikterus durch gesteigerte Hämolyse, nicht näher bezeichnet
P59.0	Neugeborenenikterus in Verbindung mit vorzeitiger Geburt
P59.1	Gallepfropf-Syndrom
P59.2	Neugeborenenikterus durch sonstige und nicht näher bezeichnete Leberzellschädigung
P59.3	Neugeborenenikterus durch Muttermilch-Inhibitor
P59.8	Neugeborenenikterus durch sonstige näher bezeichnete Ursachen
P59.9	Neugeborenenikterus, nicht näher bezeichnet
P60	Disseminierte intravasale Gerinnung beim Fetus und Neugeborenen
P61.0	Transitorische Thrombozytopenie beim Neugeborenen
P61.1	Polyglobulie beim Neugeborenen
P61.2	Anämie bei Prämaturität
P61.3	Angeborene Anämie durch fetalen Blutverlust
P61.4	Sonstige angeborene Anämien, anderenorts nicht klassifiziert
P61.5	Transitorische Neutropenie beim Neugeborenen

Code	Beschreibung
P61.6	Sonstige transitorische Gerinnungsstörungen beim Neugeborenen
P61.8	Sonstige näher bezeichnete hämatologische Krankheiten in der Perinatalperiode
P61.9	Hämatologische Krankheit in der Perinatalperiode, nicht näher bezeichnet
P70.0	Syndrom des Kindes einer Mutter mit gestationsbedingtem Diabetes mellitus
P70.1	Syndrom des Kindes einer diabetischen Mutter
P70.2	Diabetes mellitus beim Neugeborenen
P70.3	Iatrogene Hypoglykämie beim Neugeborenen
P70.4	Sonstige Hypoglykämie beim Neugeborenen
P70.8	Sonstige transitorische Störungen des Kohlenhydratstoffwechsels beim Fetus und Neugeborenen
P70.9	Transitorische Störung des Kohlenhydratstoffwechsels beim Fetus und Neugeborenen, nicht näher bezeichnet
P71.0	Kuhmilch-Hypokalzämie beim Neugeborenen
P71.1	Sonstige Hypokalzämie beim Neugeborenen
P71.2	Hypomagnesiämie beim Neugeborenen
P71.3	Tetanie beim Neugeborenen, ohne Kalzium- oder Magnesiummangel
P71.4	Transitorischer Hypoparathyreoidismus beim Neugeborenen
P71.8	Sonstige transitorische Störungen des Kalzium- und Magnesiumstoffwechsels beim Neugeborenen
P71.9	Transitorische Störung des Kalzium- und Magnesiumstoffwechsels beim Neugeborenen, nicht näher bezeichnet
P72.0	Struma beim Neugeborenen, anderenorts nicht klassifiziert
P72.1	Transitorische Hyperthyreose beim Neugeborenen
P72.2	Sonstige transitorische Störungen der Schilddrüsenfunktion beim Neugeborenen, anderenorts nicht klassifiziert
P72.8	Sonstige näher bezeichnete transitorische endokrine Krankheiten beim Neugeborenen
P72.9	Transitorische endokrine Krankheit beim Neugeborenen, nicht näher bezeichnet
P74.0	Metabolische Spätazidose beim Neugeborenen
P74.1	Dehydratation beim Neugeborenen
P74.2	Störungen des Natriumgleichgewichtes beim Neugeborenen
P74.3	Störungen des Kaliumgleichgewichtes beim Neugeborenen
P74.4	Sonstige transitorische Störungen des Elektrolythaushaltes beim Neugeborenen
P74.5	Transitorische Hypertyrosinämie beim Neugeborenen
P74.8	Sonstige transitorische Stoffwechselstörungen beim Neugeborenen
P74.9	Transitorische Stoffwechselstörung beim Neugeborenen, nicht näher bezeichnet
P75	Mekoniumileus bei zystischer Fibrose {E84.1}
P76.0	Mekoniumpfropf-Syndrom
P76.1	Transitorischer Ileus beim Neugeborenen
P76.2	Darmverschluss beim Neugeborenen durch eingedickte Milch
P76.8	Sonstiger näher bezeichneter Darmverschluss beim Neugeborenen
P76.9	Darmverschluss beim Neugeborenen, nicht näher bezeichnet
P77	Enterocolitis necroticans beim Fetus und Neugeborenen
P78.0	Darmperforation in der Perinatalperiode
P78.1	Sonstige Peritonitis beim Neugeborenen
P78.2	Hämatemesis und Meläna beim Neugeborenen durch Verschlucken mütterlichen Blutes
P78.3	Nichtinfektiöse Diarrhoe beim Neugeborenen
P78.8	Sonstige näher bezeichnete Krankheiten des Verdauungssystems in der Perinatalperiode
P78.9	Krankheit des Verdauungssystems in der Perinatalperiode, nicht näher bezeichnet
P80.0	Kältesyndrom beim Neugeborenen
P80.8	Sonstige Hypothermie beim Neugeborenen
P80.9	Hypothermie beim Neugeborenen, nicht näher bezeichnet
P81.0	Umweltbedingte Hyperthermie beim Neugeborenen
P81.8	Sonstige näher bezeichnete Störungen der Temperaturregulation beim Neugeborenen
P81.9	Störung der Temperaturregulation beim Neugeborenen, nicht näher bezeichnet
P83.0	Sclerema neonatorum
P83.1	Erythema toxicum neonatorum
P83.2	Hydrops fetalis, nicht durch hämolytische Krankheit bedingt
P83.3	Sonstiges und nicht näher bezeichnetes Ödem, das für den Fetus und das Neugeborene spezifisch ist
P83.4	Brustdrüsenschwellung beim Neugeborenen
P83.5	Angeborene Hydrozele
P83.6	Umbilikaler Polyp beim Neugeborenen
P83.8	Sonstige näher bezeichnete Krankheitszustände der Haut, die für den Fetus und das Neugeborene spezifisch sind
P83.9	Krankheitszustand der Haut, der für den Fetus und das Neugeborene spezifisch ist, nicht näher bezeichnet
P90	Krämpfe beim Neugeborenen
P91.0	Zerebrale Ischämie beim Neugeborenen
P91.1	Erworbene periventrikuläre Zysten beim Neugeborenen
P91.2	Zerebrale Leukomalazie beim Neugeborenen
P91.3	Zerebrale Übererregbarkeit des Neugeborenen
P91.4	Zerebraler Depressionszustand des Neugeborenen
P91.5	Koma beim Neugeborenen
P91.6	Hypoxisch-ischämische Enzephalopathie beim Neugeborenen [HIE]
P91.80	Locked-in-Syndrom und apallisches Syndrom beim Neugeborenen
P91.88	Sonstige näher bezeichnete zerebrale Störungen beim Neugeborenen
P91.9	Zerebrale Störung beim Neugeborenen, nicht näher bezeichnet
P92.0	Erbrechen beim Neugeborenen
P92.1	Regurgitation und Rumination beim Neugeborenen
P92.2	Trinkunlust beim Neugeborenen
P92.3	Unterernährung beim Neugeborenen
P92.4	Überernährung beim Neugeborenen
P92.5	Schwierigkeit beim Neugeborenen bei Brusternährung
P92.8	Sonstige Ernährungsprobleme beim Neugeborenen
P92.9	Ernährungsproblem beim Neugeborenen, nicht näher bezeichnet
P93	Reaktionen und Intoxikationen durch Arzneimittel oder Drogen, die dem Fetus und Neugeborenen verabreicht wurden
P94.0	Transitorische Myasthenia gravis beim Neugeborenen
P94.1	Angeborene Muskelhypertonie
P94.2	Angeborene Muskelhypotonie
P94.8	Sonstige Störungen des Muskeltonus beim Neugeborenen
P94.9	Störung des Muskeltonus beim Neugeborenen, nicht näher bezeichnet
P95	Fetaltod nicht näher bezeichneter Ursache
P96.0	Angeborene Niereninsuffizienz
P96.1	Entzugssymptome beim Neugeborenen bei Einnahme von abhängigkeitserzeugenden Arzneimitteln oder Drogen durch die Mutter

Code	Beschreibung
P96.2	Entzugssymptome bei therapeutischer Anwendung von Arzneimitteln beim Neugeborenen
P96.3	Weite Schädelnähte beim Neugeborenen
P96.4	Schwangerschaftsabbruch als Ursache von Zuständen beim Fetus und Neugeborenem
P96.5	Komplikationen bei intrauterinen Eingriffen, anderenorts nicht klassifiziert, als Ursache von Zuständen beim Fetus und Neugeborenem
P96.8	Sonstige näher bezeichnete Zustände, die ihren Ursprung in der Perinatalperiode haben
P96.9	Zustand, der seinen Ursprung in der Perinatalperiode hat, nicht näher bezeichnet

Code	Beschreibung
Q86.0	Alkohol-Embryopathie (mit Dysmorphien)
Z38.0	Einling, Geburt im Krankenhaus
Z38.1	Einling, Geburt außerhalb des Krankenhauses
Z38.2	Einling, Geburtsort nicht näher bezeichnet
Z38.3	Zwilling, Geburt im Krankenhaus
Z38.4	Zwilling, Geburt außerhalb des Krankenhauses
Z38.5	Zwilling, Geburtsort nicht näher bezeichnet
Z38.6	Anderer Mehrling, Geburt im Krankenhaus
Z38.7	Anderer Mehrling, Geburt außerhalb des Krankenhauses
Z38.8	Anderer Mehrling, Geburtsort nicht näher bezeichnet

Tabelle D.6b Alterskonflikt - Kleinkind

Code	Beschreibung	Code	Beschreibung
Q89.4	Siamesische Zwillinge	R95.0	Plötzlicher Kindstod mit Angabe einer Obduktion
R06.80	Akutes lebensbedrohliches Ereignis im Säuglingsalter	R95.9	Plötzlicher Kindstod ohne Angabe einer Obduktion

Tabelle D.6c Alterskonflikt - Kind

Code	Beschreibung
E30.1	Vorzeitige Pubertät [Pubertas praecox]

Code	Beschreibung
R68.1	Unspezifische Symptome im Kleinkindalter

Tabelle D.6d Alterskonflikt - Kinder und Jugendliche

Code	Beschreibung
E55.0	Floride Rachitis
G93.7	Reye-Syndrom
L21.1	Seborrhoisches Ekzem der Kinder
M08.00	Juvenile chronische Polyarthritis, adulter Typ: Mehrere Lokalisationen
M08.01	Juvenile chronische Polyarthritis, adulter Typ: Schulterregion
M08.02	Juvenile chronische Polyarthritis, adulter Typ: Oberarm
M08.03	Juvenile chronische Polyarthritis, adulter Typ: Unterarm
M08.04	Juvenile chronische Polyarthritis, adulter Typ: Hand
M08.05	Juvenile chronische Polyarthritis, adulter Typ: Beckenregion und Oberschenkel
M08.06	Juvenile chronische Polyarthritis, adulter Typ: Unterschenkel
M08.07	Juvenile chronische Polyarthritis, adulter Typ: Knöchel und Fuß
M08.08	Juvenile chronische Polyarthritis, adulter Typ: Sonstige
M08.09	Juvenile chronische Polyarthritis, adulter Typ: Nicht näher bezeichnete Lokalisation
M08.10	Juvenile Spondylitis ankylosans: Mehrere Lokalisationen
M08.11	Juvenile Spondylitis ankylosans: Schulterregion
M08.12	Juvenile Spondylitis ankylosans: Oberarm
M08.13	Juvenile Spondylitis ankylosans: Unterarm
M08.14	Juvenile Spondylitis ankylosans: Hand
M08.15	Juvenile Spondylitis ankylosans: Beckenregion und Oberschenkel
M08.16	Juvenile Spondylitis ankylosans: Unterschenkel
M08.17	Juvenile Spondylitis ankylosans: Knöchel und Fuß
M08.18	Juvenile Spondylitis ankylosans: Sonstige
M08.19	Juvenile Spondylitis ankylosans: Nicht näher bezeichnete Lokalisation
M08.20	Juvenile chronische Arthritis, systemisch beginnende Form: Mehrere Lokalisationen
M08.21	Juvenile chronische Arthritis, systemisch beginnende Form: Schulterregion
M08.22	Juvenile chronische Arthritis, systemisch beginnende Form: Oberarm
M08.23	Juvenile chronische Arthritis, systemisch beginnende Form: Unterarm
M08.24	Juvenile chronische Arthritis, systemisch beginnende Form: Hand
M08.25	Juvenile chronische Arthritis, systemisch beginnende Form: Beckenregion und Oberschenkel
M08.26	Juvenile chronische Arthritis, systemisch beginnende Form: Unterschenkel
M08.27	Juvenile chronische Arthritis, systemisch beginnende Form: Knöchel und Fuß
M08.28	Juvenile chronische Arthritis, systemisch beginnende Form: Sonstige
M08.29	Juvenile chronische Arthritis, systemisch beginnende Form: Nicht näher bezeichnete Lokalisation
M08.3	Juvenile chronische Arthritis (seronegativ), polyartikuläre Form
M08.40	Juvenile chronische Arthritis, oligoartikuläre Form: Mehrere Lokalisationen
M08.41	Juvenile chronische Arthritis, oligoartikuläre Form: Schulterregion
M08.42	Juvenile chronische Arthritis, oligoartikuläre Form: Oberarm
M08.43	Juvenile chronische Arthritis, oligoartikuläre Form: Unterarm
M08.44	Juvenile chronische Arthritis, oligoartikuläre Form: Hand
M08.45	Juvenile chronische Arthritis, oligoartikuläre Form: Beckenregion und Oberschenkel
M08.46	Juvenile chronische Arthritis, oligoartikuläre Form: Unterschenkel
M08.47	Juvenile chronische Arthritis, oligoartikuläre Form: Knöchel und Fuß
M08.48	Juvenile chronische Arthritis, oligoartikuläre Form: Sonstige
M08.49	Juvenile chronische Arthritis, oligoartikuläre Form: Nicht näher bezeichnete Lokalisation
M08.80	Sonstige juvenile Arthritis: Mehrere Lokalisationen
M08.81	Sonstige juvenile Arthritis: Schulterregion
M08.82	Sonstige juvenile Arthritis: Oberarm
M08.83	Sonstige juvenile Arthritis: Unterarm
M08.84	Sonstige juvenile Arthritis: Hand
M08.85	Sonstige juvenile Arthritis: Beckenregion und Oberschenkel
M08.86	Sonstige juvenile Arthritis: Unterschenkel
M08.87	Sonstige juvenile Arthritis: Knöchel und Fuß
M08.88	Sonstige juvenile Arthritis: Sonstige
M08.89	Sonstige juvenile Arthritis: Nicht näher bezeichnete Lokalisation
M08.90	Juvenile Arthritis, nicht näher bezeichnet: Mehrere Lokalisationen
M08.91	Juvenile Arthritis, nicht näher bezeichnet: Schulterregion
M08.92	Juvenile Arthritis, nicht näher bezeichnet: Oberarm
M08.93	Juvenile Arthritis, nicht näher bezeichnet: Unterarm
M08.94	Juvenile Arthritis, nicht näher bezeichnet: Hand
M08.95	Juvenile Arthritis, nicht näher bezeichnet: Beckenregion und Oberschenkel
M08.96	Juvenile Arthritis, nicht näher bezeichnet: Unterschenkel
M08.97	Juvenile Arthritis, nicht näher bezeichnet: Knöchel und Fuß
M08.98	Juvenile Arthritis, nicht näher bezeichnet: Sonstige
M08.99	Juvenile Arthritis, nicht näher bezeichnet: Nicht näher bezeichnete Lokalisation
M09.00	Juvenile Arthritis bei Psoriasis {L40.5}: Mehrere Lokalisationen
M09.01	Juvenile Arthritis bei Psoriasis {L40.5}: Schulterregion
M09.02	Juvenile Arthritis bei Psoriasis {L40.5}: Oberarm
M09.03	Juvenile Arthritis bei Psoriasis {L40.5}: Unterarm
M09.04	Juvenile Arthritis bei Psoriasis {L40.5}: Hand
M09.05	Juvenile Arthritis bei Psoriasis {L40.5}: Beckenregion und Oberschenkel
M09.06	Juvenile Arthritis bei Psoriasis {L40.5}: Unterschenkel
M09.07	Juvenile Arthritis bei Psoriasis {L40.5}: Knöchel und Fuß
M09.08	Juvenile Arthritis bei Psoriasis {L40.5}: Sonstige
M09.09	Juvenile Arthritis bei Psoriasis {L40.5}: Nicht näher bezeichnete Lokalisation
M09.10	Juvenile Arthritis bei Crohn-Krankheit [Enteritis regionalis] {K50.-}: Mehrere Lokalisationen
M09.11	Juvenile Arthritis bei Crohn-Krankheit [Enteritis regionalis] {K50.-}: Schulterregion
M09.12	Juvenile Arthritis bei Crohn-Krankheit [Enteritis regionalis] {K50.-}: Oberarm
M09.13	Juvenile Arthritis bei Crohn-Krankheit [Enteritis regionalis] {K50.-}: Unterarm
M09.14	Juvenile Arthritis bei Crohn-Krankheit [Enteritis regionalis] {K50.-}: Hand

Code	Beschreibung
M09.15	Juvenile Arthritis bei Crohn-Krankheit [Enteritis regionalis] {K50.-}: Beckenregion und Oberschenkel
M09.16	Juvenile Arthritis bei Crohn-Krankheit [Enteritis regionalis] {K50.-}: Unterschenkel
M09.17	Juvenile Arthritis bei Crohn-Krankheit [Enteritis regionalis] {K50.-}: Knöchel und Fuß
M09.18	Juvenile Arthritis bei Crohn-Krankheit [Enteritis regionalis] {K50.-}: Sonstige
M09.19	Juvenile Arthritis bei Crohn-Krankheit [Enteritis regionalis] {K50.-}: Nicht näher bezeichnete Lokalisation
M09.20	Juvenile Arthritis bei Colitis ulcerosa {K51.-}: Mehrere Lokalisationen
M09.21	Juvenile Arthritis bei Colitis ulcerosa {K51.-}: Schulterregion
M09.22	Juvenile Arthritis bei Colitis ulcerosa {K51.-}: Oberarm
M09.23	Juvenile Arthritis bei Colitis ulcerosa {K51.-}: Unterarm
M09.24	Juvenile Arthritis bei Colitis ulcerosa {K51.-}: Hand
M09.25	Juvenile Arthritis bei Colitis ulcerosa {K51.-}: Beckenregion und Oberschenkel
M09.26	Juvenile Arthritis bei Colitis ulcerosa {K51.-}: Unterschenkel
M09.27	Juvenile Arthritis bei Colitis ulcerosa {K51.-}: Knöchel und Fuß
M09.28	Juvenile Arthritis bei Colitis ulcerosa {K51.-}: Sonstige
M09.29	Juvenile Arthritis bei Colitis ulcerosa {K51.-}: Nicht näher bezeichnete Lokalisation
M09.80	Juvenile Arthritis bei sonstigen anderenorts klassifizierten Krankheiten: Mehrere Lokalisationen
M09.81	Juvenile Arthritis bei sonstigen anderenorts klassifizierten Krankheiten: Schulterregion
M09.82	Juvenile Arthritis bei sonstigen anderenorts klassifizierten Krankheiten: Oberarm
M09.83	Juvenile Arthritis bei sonstigen anderenorts klassifizierten Krankheiten: Unterarm
M09.84	Juvenile Arthritis bei sonstigen anderenorts klassifizierten Krankheiten: Hand
M09.85	Juvenile Arthritis bei sonstigen anderenorts klassifizierten Krankheiten: Beckenregion und Oberschenkel
M09.86	Juvenile Arthritis bei sonstigen anderenorts klassifizierten Krankheiten: Unterschenkel
M09.87	Juvenile Arthritis bei sonstigen anderenorts klassifizierten Krankheiten: Knöchel und Fuß
M09.88	Juvenile Arthritis bei sonstigen anderenorts klassifizierten Krankheiten: Sonstige
M09.89	Juvenile Arthritis bei sonstigen anderenorts klassifizierten Krankheiten: Nicht näher bezeichnete Lokalisation
M30.2	Juvenile Panarteriitis
M33.0	Juvenile Dermatomyositis
M41.10	Idiopathische Skoliose beim Jugendlichen: Mehrere Lokalisationen der Wirbelsäule
M41.11	Idiopathische Skoliose beim Jugendlichen: Okzipito-Atlanto-Axialbereich
M41.12	Idiopathische Skoliose beim Jugendlichen: Zervikalbereich
M41.13	Idiopathische Skoliose beim Jugendlichen: Zervikothorakalbereich
M41.14	Idiopathische Skoliose beim Jugendlichen: Thorakalbereich
M41.15	Idiopathische Skoliose beim Jugendlichen: Thorakolumbalbereich
M41.16	Idiopathische Skoliose beim Jugendlichen: Lumbalbereich
M41.17	Idiopathische Skoliose beim Jugendlichen: Lumbosakralbereich
M41.18	Idiopathische Skoliose beim Jugendlichen: Sakral- und Sakrokokzygealbereich
M41.19	Idiopathische Skoliose beim Jugendlichen: Nicht näher bezeichnete Lokalisation
M42.00	Juvenile Osteochondrose der Wirbelsäule: Mehrere Lokalisationen der Wirbelsäule
M42.01	Juvenile Osteochondrose der Wirbelsäule: Okzipito-Atlanto-Axialbereich
M42.02	Juvenile Osteochondrose der Wirbelsäule: Zervikalbereich
M42.03	Juvenile Osteochondrose der Wirbelsäule: Zervikothorakalbereich
M42.04	Juvenile Osteochondrose der Wirbelsäule: Thorakalbereich
M42.05	Juvenile Osteochondrose der Wirbelsäule: Thorakolumbalbereich
M42.06	Juvenile Osteochondrose der Wirbelsäule: Lumbalbereich
M42.07	Juvenile Osteochondrose der Wirbelsäule: Lumbosakralbereich
M42.08	Juvenile Osteochondrose der Wirbelsäule: Sakral- und Sakrokokzygealbereich
M42.09	Juvenile Osteochondrose der Wirbelsäule: Nicht näher bezeichnete Lokalisation
M89.10	Stillstand des Epiphysenwachstums: Mehrere Lokalisationen
M89.11	Stillstand des Epiphysenwachstums: Schulterregion
M89.12	Stillstand des Epiphysenwachstums: Oberarm
M89.13	Stillstand des Epiphysenwachstums: Unterarm
M89.14	Stillstand des Epiphysenwachstums: Hand
M89.15	Stillstand des Epiphysenwachstums: Beckenregion und Oberschenkel
M89.16	Stillstand des Epiphysenwachstums: Unterschenkel
M89.17	Stillstand des Epiphysenwachstums: Knöchel und Fuß
M89.18	Stillstand des Epiphysenwachstums: Sonstige
M89.19	Stillstand des Epiphysenwachstums: Nicht näher bezeichnete Lokalisation
M89.20	Sonstige Störungen der Knochenentwicklung und des Knochenwachstums: Mehrere Lokalisationen
M89.21	Sonstige Störungen der Knochenentwicklung und des Knochenwachstums: Schulterregion
M89.22	Sonstige Störungen der Knochenentwicklung und des Knochenwachstums: Oberarm
M89.23	Sonstige Störungen der Knochenentwicklung und des Knochenwachstums: Unterarm
M89.24	Sonstige Störungen der Knochenentwicklung und des Knochenwachstums: Hand
M89.25	Sonstige Störungen der Knochenentwicklung und des Knochenwachstums: Beckenregion und Oberschenkel
M89.26	Sonstige Störungen der Knochenentwicklung und des Knochenwachstums: Unterschenkel
M89.27	Sonstige Störungen der Knochenentwicklung und des Knochenwachstums: Knöchel und Fuß
M89.28	Sonstige Störungen der Knochenentwicklung und des Knochenwachstums: Sonstige
M89.29	Sonstige Störungen der Knochenentwicklung und des Knochenwachstums: Nicht näher bezeichnete Lokalisation
M91.0	Juvenile Osteochondrose des Beckens
M91.1	Juvenile Osteochondrose des Femurkopfes [Perthes-Legg-Calvé-Krankheit]
M91.2	Coxa plana
M91.3	Pseudokoxalgie
M91.8	Sonstige juvenile Osteochondrose der Hüfte und des Beckens
M91.9	Juvenile Osteochondrose der Hüfte und des Beckens, nicht näher bezeichnet
M92.0	Juvenile Osteochondrose des Humerus

Code	Beschreibung
M92.1	Juvenile Osteochondrose des Radius und der Ulna
M92.2	Juvenile Osteochondrose der Hand
M92.3	Sonstige juvenile Osteochondrose der oberen Extremität
M92.4	Juvenile Osteochondrose der Patella
M92.5	Juvenile Osteochondrose der Tibia und der Fibula
M92.6	Juvenile Osteochondrose des Tarsus
M92.7	Juvenile Osteochondrose des Metatarsus
M92.8	Sonstige näher bezeichnete juvenile Osteochondrose
M92.9	Juvenile Osteochondrose, nicht näher bezeichnet
R62.0	Verzögertes Erreichen von Entwicklungsstufen
R62.8	Sonstiges Ausbleiben der erwarteten physiologischen Entwicklung
R62.9	Ausbleiben der erwarteten physiologischen Entwicklung, nicht näher bezeichnet

Tabelle D.6e Alterskonflikt - Post-neonatal

Code	Beschreibung
E12.01	Diabetes mellitus in Verbindung mit Fehl- oder Mangelernährung [Malnutrition]: Mit Koma: Als entgleist bezeichnet
E12.11	Diabetes mellitus in Verbindung mit Fehl- oder Mangelernährung [Malnutrition]: Mit Ketoazidose: Als entgleist bezeichnet
E12.20	Diabetes mellitus in Verbindung mit Fehl- oder Mangelernährung [Malnutrition]: Mit Nierenkomplikationen: Nicht als entgleist bezeichnet
E12.21	Diabetes mellitus in Verbindung mit Fehl- oder Mangelernährung [Malnutrition]: Mit Nierenkomplikationen: Als entgleist bezeichnet
E12.30	Diabetes mellitus in Verbindung mit Fehl- oder Mangelernährung [Malnutrition]: Mit Augenkomplikationen: Nicht als entgleist bezeichnet
E12.31	Diabetes mellitus in Verbindung mit Fehl- oder Mangelernährung [Malnutrition]: Mit Augenkomplikationen: Als entgleist bezeichnet
E12.40	Diabetes mellitus in Verbindung mit Fehl- oder Mangelernährung [Malnutrition]: Mit neurologischen Komplikationen: Nicht als entgleist bezeichnet
E12.41	Diabetes mellitus in Verbindung mit Fehl- oder Mangelernährung [Malnutrition]: Mit neurologischen Komplikationen: Als entgleist bezeichnet
E12.50	Diabetes mellitus in Verbindung mit Fehl- oder Mangelernährung [Malnutrition]: Mit peripheren vaskulären Komplikationen: Nicht als entgleist bezeichnet
E12.51	Diabetes mellitus in Verbindung mit Fehl- oder Mangelernährung [Malnutrition]: Mit peripheren vaskulären Komplikationen: Als entgleist bezeichnet
E12.60	Diabetes mellitus in Verbindung mit Fehl- oder Mangelernährung [Malnutrition]: Mit sonstigen näher bezeichneten Komplikationen: Nicht als entgleist bezeichnet
E12.61	Diabetes mellitus in Verbindung mit Fehl- oder Mangelernährung [Malnutrition]: Mit sonstigen näher bezeichneten Komplikationen: Als entgleist bezeichnet
E12.72	Diabetes mellitus in Verbindung mit Fehl- oder Mangelernährung [Malnutrition]: Mit multiplen Komplikationen: Mit sonstigen multiplen Komplikationen, nicht als entgleist bezeichnet
E12.73	Diabetes mellitus in Verbindung mit Fehl- oder Mangelernährung [Malnutrition]: Mit multiplen Komplikationen: Mit sonstigen multiplen Komplikationen, als entgleist bezeichnet
E12.74	Diabetes mellitus in Verbindung mit Fehl- oder Mangelernährung [Malnutrition]: Mit multiplen Komplikationen: Mit diabetischem Fußsyndrom, nicht als entgleist bezeichnet
E12.75	Diabetes mellitus in Verbindung mit Fehl- oder Mangelernährung [Malnutrition]: Mit multiplen Komplikationen: Mit diabetischem Fußsyndrom, als entgleist bezeichnet
E12.80	Diabetes mellitus in Verbindung mit Fehl- oder Mangelernährung [Malnutrition]: Mit nicht näher bezeichneten Komplikationen: Nicht als entgleist bezeichnet
E12.81	Diabetes mellitus in Verbindung mit Fehl- oder Mangelernährung [Malnutrition]: Mit nicht näher bezeichneten Komplikationen: Als entgleist bezeichnet
E12.90	Diabetes mellitus in Verbindung mit Fehl- oder Mangelernährung [Malnutrition]: Ohne Komplikationen: Nicht als entgleist bezeichnet
E12.91	Diabetes mellitus in Verbindung mit Fehl- oder Mangelernährung [Malnutrition]: Ohne Komplikationen: Als entgleist bezeichnet
E13.01	Sonstiger näher bezeichneter Diabetes mellitus: Mit Koma: Als entgleist bezeichnet
E13.11	Sonstiger näher bezeichneter Diabetes mellitus: Mit Ketoazidose: Als entgleist bezeichnet
E13.20	Sonstiger näher bezeichneter Diabetes mellitus: Mit Nierenkomplikationen: Nicht als entgleist bezeichnet
E13.21	Sonstiger näher bezeichneter Diabetes mellitus: Mit Nierenkomplikationen: Als entgleist bezeichnet
E13.30	Sonstiger näher bezeichneter Diabetes mellitus: Mit Augenkomplikationen: Nicht als entgleist bezeichnet
E13.31	Sonstiger näher bezeichneter Diabetes mellitus: Mit Augenkomplikationen: Als entgleist bezeichnet
E13.40	Sonstiger näher bezeichneter Diabetes mellitus: Mit neurologischen Komplikationen: Nicht als entgleist bezeichnet
E13.41	Sonstiger näher bezeichneter Diabetes mellitus: Mit neurologischen Komplikationen: Als entgleist bezeichnet
E13.50	Sonstiger näher bezeichneter Diabetes mellitus: Mit peripheren vaskulären Komplikationen: Nicht als entgleist bezeichnet
E13.51	Sonstiger näher bezeichneter Diabetes mellitus: Mit peripheren vaskulären Komplikationen: Als entgleist bezeichnet
E13.60	Sonstiger näher bezeichneter Diabetes mellitus: Mit sonstigen näher bezeichneten Komplikationen: Nicht als entgleist bezeichnet
E13.61	Sonstiger näher bezeichneter Diabetes mellitus: Mit sonstigen näher bezeichneten Komplikationen: Als entgleist bezeichnet
E13.72	Sonstiger näher bezeichneter Diabetes mellitus: Mit multiplen Komplikationen: Mit sonstigen multiplen Komplikationen, nicht als entgleist bezeichnet
E13.73	Sonstiger näher bezeichneter Diabetes mellitus: Mit multiplen Komplikationen: Mit sonstigen multiplen Komplikationen, als entgleist bezeichnet
E13.74	Sonstiger näher bezeichneter Diabetes mellitus: Mit multiplen Komplikationen: Mit diabetischem Fußsyndrom, nicht als entgleist bezeichnet
E13.75	Sonstiger näher bezeichneter Diabetes mellitus: Mit multiplen Komplikationen: Mit diabetischem Fußsyndrom, als entgleist bezeichnet
E13.80	Sonstiger näher bezeichneter Diabetes mellitus: Mit nicht näher bezeichneten Komplikationen: Nicht als entgleist bezeichnet
E13.81	Sonstiger näher bezeichneter Diabetes mellitus: Mit nicht näher bezeichneten Komplikationen: Als entgleist bezeichnet
E13.90	Sonstiger näher bezeichneter Diabetes mellitus: Ohne Komplikationen: Nicht als entgleist bezeichnet
E13.91	Sonstiger näher bezeichneter Diabetes mellitus: Ohne Komplikationen: Als entgleist bezeichnet
E14.01	Nicht näher bezeichneter Diabetes mellitus: Mit Koma: Als entgleist bezeichnet
E14.11	Nicht näher bezeichneter Diabetes mellitus: Mit Ketoazidose: Als entgleist bezeichnet
E14.20	Nicht näher bezeichneter Diabetes mellitus: Mit Nierenkomplikationen: Nicht als entgleist bezeichnet
E14.21	Nicht näher bezeichneter Diabetes mellitus: Mit Nierenkomplikationen: Als entgleist bezeichnet
E14.30	Nicht näher bezeichneter Diabetes mellitus: Mit Augenkomplikationen: Nicht als entgleist bezeichnet

Code	Beschreibung
E14.31	Nicht näher bezeichneter Diabetes mellitus: Mit Augenkomplikationen: Als entgleist bezeichnet
E14.40	Nicht näher bezeichneter Diabetes mellitus: Mit neurologischen Komplikationen: Nicht als entgleist bezeichnet
E14.41	Nicht näher bezeichneter Diabetes mellitus: Mit neurologischen Komplikationen: Als entgleist bezeichnet
E14.50	Nicht näher bezeichneter Diabetes mellitus: Mit peripheren vaskulären Komplikationen: Nicht als entgleist bezeichnet
E14.51	Nicht näher bezeichneter Diabetes mellitus: Mit peripheren vaskulären Komplikationen: Als entgleist bezeichnet
E14.60	Nicht näher bezeichneter Diabetes mellitus: Mit sonstigen näher bezeichneten Komplikationen: Nicht als entgleist bezeichnet
E14.61	Nicht näher bezeichneter Diabetes mellitus: Mit sonstigen näher bezeichneten Komplikationen: Als entgleist bezeichnet
E14.72	Nicht näher bezeichneter Diabetes mellitus: Mit multiplen Komplikationen: Mit sonstigen multiplen Komplikationen, nicht als entgleist bezeichnet
E14.73	Nicht näher bezeichneter Diabetes mellitus: Mit multiplen Komplikationen: Mit sonstigen multiplen Komplikationen, als entgleist bezeichnet
E14.74	Nicht näher bezeichneter Diabetes mellitus: Mit multiplen Komplikationen: Mit diabetischem Fußsyndrom, nicht als entgleist bezeichnet
E14.75	Nicht näher bezeichneter Diabetes mellitus: Mit multiplen Komplikationen: Mit diabetischem Fußsyndrom, als entgleist bezeichnet
E14.80	Nicht näher bezeichneter Diabetes mellitus: Mit nicht näher bezeichneten Komplikationen: Nicht als entgleist bezeichnet
E14.81	Nicht näher bezeichneter Diabetes mellitus: Mit nicht näher bezeichneten Komplikationen: Als entgleist bezeichnet
E14.90	Nicht näher bezeichneter Diabetes mellitus: Ohne Komplikationen: Nicht als entgleist bezeichnet
E14.91	Nicht näher bezeichneter Diabetes mellitus: Ohne Komplikationen: Als entgleist bezeichnet
E56.1	Vitamin-K-Mangel
E63.0	Mangel an essentiellen Fettsäuren [EFA]
E63.1	Alimentärer Mangelzustand infolge unausgewogener Zusammensetzung der Nahrung
E63.8	Sonstige näher bezeichnete alimentäre Mangelzustände
E63.9	Alimentärer Mangelzustand, nicht näher bezeichnet
E64.0	Folgen der Energie- und Eiweißmangelernährung
E64.1	Folgen des Vitamin-A-Mangels
E64.2	Folgen des Vitamin-C-Mangels
E64.3	Folgen der Rachitis
E64.8	Folgen sonstiger alimentärer Mangelzustände
E64.9	Folgen eines nicht näher bezeichneten alimentären Mangelzustandes
E65	Lokalisierte Adipositas
E66.00	Adipositas durch übermäßige Kalorienzufuhr: Adipositas Grad I (WHO) bei Patienten von 18 Jahren und älter
E66.01	Adipositas durch übermäßige Kalorienzufuhr: Adipositas Grad II (WHO) bei Patienten von 18 Jahren und älter
E66.06	Adipositas durch übermäßige Kalorienzufuhr: Adipositas Grad III (WHO) bei Patienten von 18 Jahren und älter, Body-Mass-Index [BMI] von 40 bis unter 50
E66.07	Adipositas durch übermäßige Kalorienzufuhr: Adipositas Grad III (WHO) bei Patienten von 18 Jahren und älter, Body-Mass-Index [BMI] von 50 bis unter 60
E66.08	Adipositas durch übermäßige Kalorienzufuhr: Adipositas Grad III (WHO) bei Patienten von 18 Jahren und älter, Body-Mass-Index [BMI] von 60 und mehr
E66.04	Adipositas durch übermäßige Kalorienzufuhr: Adipositas bei Kindern und Jugendlichen von 3 Jahren bis unter 18 Jahren
E66.05	Adipositas durch übermäßige Kalorienzufuhr: Extreme Adipositas bei Kindern und Jugendlichen von 3 Jahren bis unter 18 Jahren
E66.09	Adipositas durch übermäßige Kalorienzufuhr: Grad oder Ausmaß der Adipositas nicht näher bezeichnet
E66.10	Arzneimittelinduzierte Adipositas: Adipositas Grad I (WHO) bei Patienten von 18 Jahren und älter
E66.11	Arzneimittelinduzierte Adipositas: Adipositas Grad II (WHO) bei Patienten von 18 Jahren und älter
E66.16	Arzneimittelinduzierte Adipositas: Adipositas Grad III (WHO) bei Patienten von 18 Jahren und älter, Body-Mass-Index [BMI] von 40 bis unter 50
E66.17	Arzneimittelinduzierte Adipositas: Adipositas Grad III (WHO) bei Patienten von 18 Jahren und älter, Body-Mass-Index [BMI] von 50 bis unter 60
E66.18	Arzneimittelinduzierte Adipositas: Adipositas Grad III (WHO) bei Patienten von 18 Jahren und älter, Body-Mass-Index [BMI] von 60 und mehr
E66.14	Arzneimittelinduzierte Adipositas: Adipositas bei Kindern und Jugendlichen von 3 Jahren bis unter 18 Jahren
E66.15	Arzneimittelinduzierte Adipositas: Extreme Adipositas bei Kindern und Jugendlichen von 3 Jahren bis unter 18 Jahren
E66.19	Arzneimittelinduzierte Adipositas: Grad oder Ausmaß der Adipositas nicht näher bezeichnet
E66.20	Übermäßige Adipositas mit alveolärer Hypoventilation: Adipositas Grad I (WHO) bei Patienten von 18 Jahren und älter
E66.21	Übermäßige Adipositas mit alveolärer Hypoventilation: Adipositas Grad II (WHO) bei Patienten von 18 Jahren und älter
E66.26	Übermäßige Adipositas mit alveolärer Hypoventilation: Adipositas Grad III (WHO) bei Patienten von 18 Jahren und älter, Body-Mass-Index [BMI] von 40 bis unter 50
E66.27	Übermäßige Adipositas mit alveolärer Hypoventilation: Adipositas Grad III (WHO) bei Patienten von 18 Jahren und älter, Body-Mass-Index [BMI] von 50 bis unter 60
E66.28	Übermäßige Adipositas mit alveolärer Hypoventilation: Adipositas Grad III (WHO) bei Patienten von 18 Jahren und älter, Body-Mass-Index [BMI] von 60 und mehr
E66.24	Übermäßige Adipositas mit alveolärer Hypoventilation: Adipositas bei Kindern und Jugendlichen von 3 Jahren bis unter 18 Jahren
E66.25	Übermäßige Adipositas mit alveolärer Hypoventilation: Extreme Adipositas bei Kindern und Jugendlichen von 3 Jahren bis unter 18 Jahren
E66.29	Übermäßige Adipositas mit alveolärer Hypoventilation: Grad oder Ausmaß der Adipositas nicht näher bezeichnet
E66.80	Sonstige Adipositas: Adipositas Grad I (WHO) bei Patienten von 18 Jahren und älter
E66.81	Sonstige Adipositas: Adipositas Grad II (WHO) bei Patienten von 18 Jahren und älter

Code	Beschreibung
E66.86	Sonstige Adipositas: Adipositas Grad III (WHO) bei Patienten von 18 Jahren und älter, Body-Mass-Index [BMI] von 40 bis unter 50
E66.87	Sonstige Adipositas: Adipositas Grad III (WHO) bei Patienten von 18 Jahren und älter, Body-Mass-Index [BMI] von 50 bis unter 60
E66.88	Sonstige Adipositas: Adipositas Grad III (WHO) bei Patienten von 18 Jahren und älter, Body-Mass-Index [BMI] von 60 und mehr
E66.84	Sonstige Adipositas: Adipositas bei Kindern und Jugendlichen von 3 Jahren bis unter 18 Jahren
E66.85	Sonstige Adipositas: Extreme Adipositas bei Kindern und Jugendlichen von 3 Jahren bis unter 18 Jahren
E66.89	Sonstige Adipositas: Grad oder Ausmaß der Adipositas nicht näher bezeichnet
E66.90	Adipositas, nicht näher bezeichnet: Adipositas Grad I (WHO) bei Patienten von 18 Jahren und älter
E66.91	Adipositas, nicht näher bezeichnet: Adipositas Grad II (WHO) bei Patienten von 18 Jahren und älter
E66.96	Adipositas, nicht näher bezeichnet: Adipositas Grad III (WHO) bei Patienten von 18 Jahren und älter, Body-Mass-Index [BMI] von 40 bis unter 50

Code	Beschreibung
E66.97	Adipositas, nicht näher bezeichnet: Adipositas Grad III (WHO) bei Patienten von 18 Jahren und älter, Body-Mass-Index [BMI] von 50 bis unter 60
E66.98	Adipositas, nicht näher bezeichnet: Adipositas Grad III (WHO) bei Patienten von 18 Jahren und älter, Body-Mass-Index [BMI] von 60 und mehr
E66.94	Adipositas, nicht näher bezeichnet: Adipositas bei Kindern und Jugendlichen von 3 Jahren bis unter 18 Jahren
E66.95	Adipositas, nicht näher bezeichnet: Extreme Adipositas bei Kindern und Jugendlichen von 3 Jahren bis unter 18 Jahren
E66.99	Adipositas, nicht näher bezeichnet: Grad oder Ausmaß der Adipositas nicht näher bezeichnet
E67.0	Hypervitaminose A
E67.1	Hyperkarotinämie
E67.2	Megavitamin-B6-Syndrom
E67.3	Hypervitaminose D
E67.8	Sonstige näher bezeichnete Überernährung
E68	Folgen der Überernährung
K92.1	Meläna

Tabelle D.6f Alterskonflikt - Älter als Säugling

Code	Beschreibung
A50.3	Konnatale spätsyphilitische Augenkrankheit
A50.4	Konnatale spätauftretende Neurosyphilis [Juvenile Neurosyphilis]
A50.5	Sonstige Formen der floriden konnatalen Spätsyphilis
A50.6	Latente konnatale Spätsyphilis
A50.7	Konnatale Spätsyphilis, nicht näher bezeichnet
B94.0	Folgezustände des Trachoms
B94.1	Folgezustände der Virusenzephalitis
B94.2	Folgezustände der Virushepatitis
B94.8	Folgezustände sonstiger näher bezeichneter infektiöser und parasitärer Krankheiten
B94.9	Folgezustände nicht näher bezeichneter infektiöser oder parasitärer Krankheit
F80.0	Artikulationsstörung
F80.1	Expressive Sprachstörung
F80.20	Auditive Verarbeitungs- und Wahrnehmungsstörung [AVWS]
F80.28	Sonstige rezeptive Sprachstörung
F80.3	Erworbene Aphasie mit Epilepsie [Landau-Kleffner-Syndrom]
F80.8	Sonstige Entwicklungsstörungen des Sprechens oder der Sprache
F80.9	Entwicklungsstörung des Sprechens oder der Sprache, nicht näher bezeichnet
F81.0	Lese- und Rechtschreibstörung
F81.1	Isolierte Rechtschreibstörung
F81.2	Rechenstörung
F81.3	Kombinierte Störungen schulischer Fertigkeiten
F81.8	Sonstige Entwicklungsstörungen schulischer Fertigkeiten
F81.9	Entwicklungsstörung schulischer Fertigkeiten, nicht näher bezeichnet
F82.0	Umschriebene Entwicklungsstörung der Grobmotorik
F82.1	Umschriebene Entwicklungsstörung der Fein- und Graphomotorik
F82.2	Umschriebene Entwicklungsstörung der Mundmotorik
F82.9	Umschriebene Entwicklungsstörung der motorischen Funktionen, nicht näher bezeichnet
F83	Kombinierte umschriebene Entwicklungsstörungen
F88	Andere Entwicklungsstörungen
F89	Nicht näher bezeichnete Entwicklungsstörung
H40.0	Glaukomverdacht
H40.1	Primäres Weitwinkelglaukom
H40.2	Primäres Engwinkelglaukom
H40.3	Glaukom (sekundär) nach Verletzung des Auges
H40.4	Glaukom (sekundär) nach Entzündung des Auges
H40.5	Glaukom (sekundär) nach sonstigen Affektionen des Auges
H40.6	Glaukom (sekundär) nach Arzneimittelverabreichung
H40.8	Sonstiges Glaukom
H40.9	Glaukom, nicht näher bezeichnet
H42.0	Glaukom bei endokrinen, Ernährungs- und Stoffwechselkrankheiten
H42.8	Glaukom bei sonstigen anderenorts klassifizierten Krankheiten
I09.0	Rheumatische Myokarditis
I09.1	Rheumatische Krankheiten des Endokards, Herzklappe nicht näher bezeichnet
I09.2	Chronische rheumatische Perikarditis
I09.8	Sonstige näher bezeichnete rheumatische Herzkrankheiten
I09.9	Rheumatische Herzkrankheit, nicht näher bezeichnet

Code	Beschreibung
I26.0	Lungenembolie mit Angabe eines akuten Cor pulmonale
I27.0	Primäre pulmonale Hypertonie
I27.1	Kyphoskoliotische Herzkrankheit
J37.0	Chronische Laryngitis
J37.1	Chronische Laryngotracheitis
J41.0	Einfache chronische Bronchitis
J41.1	Schleimig-eitrige chronische Bronchitis
J41.8	Mischformen von einfacher und schleimig-eitriger chronischer Bronchitis
J42	Nicht näher bezeichnete chronische Bronchitis
J43.0	McLeod-Syndrom
J43.1	Panlobuläres Emphysem
J43.2	Zentrilobuläres Emphysem
J43.8	Sonstiges Emphysem
J43.9	Emphysem, nicht näher bezeichnet
J44.00	Chronische obstruktive Lungenkrankheit mit akuter Infektion der unteren Atemwege: FEV1 <35 % des Sollwertes
J44.01	Chronische obstruktive Lungenkrankheit mit akuter Infektion der unteren Atemwege: FEV1 >=35 % und <50 % des Sollwertes
J44.02	Chronische obstruktive Lungenkrankheit mit akuter Infektion der unteren Atemwege: FEV1 >=50 % und <70 % des Sollwertes
J44.03	Chronische obstruktive Lungenkrankheit mit akuter Infektion der unteren Atemwege: FEV1 >=70 % des Sollwertes
J44.09	Chronische obstruktive Lungenkrankheit mit akuter Infektion der unteren Atemwege: FEV1 nicht näher bezeichnet
J44.10	Chronische obstruktive Lungenkrankheit mit akuter Exazerbation, nicht näher bezeichnet: FEV1 <35 % des Sollwertes
J44.11	Chronische obstruktive Lungenkrankheit mit akuter Exazerbation, nicht näher bezeichnet: FEV1 >=35 % und <50 % des Sollwertes
J44.12	Chronische obstruktive Lungenkrankheit mit akuter Exazerbation, nicht näher bezeichnet: FEV1 >=50 % und <70 % des Sollwertes
J44.13	Chronische obstruktive Lungenkrankheit mit akuter Exazerbation, nicht näher bezeichnet: FEV1 >=70 % des Sollwertes
J44.19	Chronische obstruktive Lungenkrankheit mit akuter Exazerbation, nicht näher bezeichnet: FEV1 nicht näher bezeichnet
J44.80	Sonstige näher bezeichnete chronische obstruktive Lungenkrankheit: FEV1 <35 % des Sollwertes
J44.81	Sonstige näher bezeichnete chronische obstruktive Lungenkrankheit: FEV1 >=35 % und <50 % des Sollwertes
J44.82	Sonstige näher bezeichnete chronische obstruktive Lungenkrankheit: FEV1 >=50 % und <70 % des Sollwertes
J44.83	Sonstige näher bezeichnete chronische obstruktive Lungenkrankheit: FEV1 >=70 % des Sollwertes
J44.89	Sonstige näher bezeichnete chronische obstruktive Lungenkrankheit: FEV1 nicht näher bezeichnet
K00.0	Anodontie
K00.1	Hyperodontie
K00.2	Abnormitäten in Größe und Form der Zähne
K00.3	Schmelzflecken [Mottled teeth]
K00.4	Störungen in der Zahnbildung
K00.5	Hereditäre Störungen der Zahnstruktur, anderenorts nicht klassifiziert
K00.6	Störungen des Zahndurchbruchs

Code	Beschreibung
K00.7	Dentitionskrankheit
K00.8	Sonstige Störungen der Zahnentwicklung
K00.9	Störung der Zahnentwicklung, nicht näher bezeichnet
K01.0	Retinierte Zähne
K01.1	Impaktierte Zähne
K02.0	Karies, auf den Zahnschmelz begrenzt
K02.1	Karies des Dentins
K02.2	Karies des Zements
K02.3	Kariesmarke
K02.4	Odontoklasie
K02.5	Karies mit freiliegender Pulpa
K02.8	Sonstige Zahnkaries
K02.9	Zahnkaries, nicht näher bezeichnet
K03.0	Ausgeprägte Attrition der Zähne
K03.1	Abrasion der Zähne
K03.2	Erosion der Zähne
K03.3	Pathologische Zahnresorption
K03.4	Hyperzementose
K03.5	Ankylose der Zähne
K03.6	Auflagerungen [Beläge] auf den Zähnen
K03.7	Farbänderungen der Zahnhartsubstanzen nach dem Zahndurchbruch
K03.8	Sonstige näher bezeichnete Krankheiten der Zahnhartsubstanzen
K03.9	Krankheit der Zahnhartsubstanzen, nicht näher bezeichnet
K04.0	Pulpitis
K04.1	Pulpanekrose
K04.2	Pulpadegeneration
K04.3	Abnorme Bildung von Zahnhartsubstanz in der Pulpa
K04.4	Akute apikale Parodontitis pulpalen Ursprungs
K04.5	Chronische apikale Parodontitis
K04.6	Periapikaler Abszess mit Fistel
K04.7	Periapikaler Abszess ohne Fistel
K04.8	Radikuläre Zyste
K04.9	Sonstige und nicht näher bezeichnete Krankheiten der Pulpa und des periapikalen Gewebes
K05.0	Akute Gingivitis
K05.1	Chronische Gingivitis
K05.2	Akute Parodontitis
K05.3	Chronische Parodontitis
K05.4	Parodontose
K05.5	Sonstige Krankheiten des Parodonts
K05.6	Krankheit des Parodonts, nicht näher bezeichnet
K06.0	Gingivaretraktion
K06.1	Gingivahyperplasie
K06.2	Gingivaläsionen und Läsionen des zahnlosen Alveolarkammes in Verbindung mit Trauma
K06.8	Sonstige näher bezeichnete Krankheiten der Gingiva und des zahnlosen Alveolarkammes
K06.9	Krankheit der Gingiva und des zahnlosen Alveolarkammes, nicht näher bezeichnet
K07.0	Stärkere Anomalien der Kiefergröße
K07.1	Anomalien des Kiefer-Schädelbasis-Verhältnisses
K07.2	Anomalien des Zahnbogenverhältnisses
K07.3	Zahnstellungsanomalien
K07.4	Fehlerhafte Okklusion, nicht näher bezeichnet
K07.5	Funktionelle dentofaziale Anomalien
K07.6	Krankheiten des Kiefergelenkes
K07.8	Sonstige dentofaziale Anomalien
K07.9	Dentofaziale Anomalie, nicht näher bezeichnet
K08.0	Zahnverfall durch systemische Ursachen
K08.1	Zahnverlust durch Unfall, Extraktion oder lokalisierte parodontale Krankheit
K08.2	Atrophie des zahnlosen Alveolarkammes
K08.3	Verbliebene Zahnwurzel
K08.81	Pathologische Zahnfraktur
K08.88	Sonstige näher bezeichnete Krankheiten der Zähne und des Zahnhalteapparates

Code	Beschreibung
K08.9	Krankheit der Zähne und des Zahnhalteapparates, nicht näher bezeichnet
K22.0	Achalasie der Kardia
K22.2	Ösophagusverschluss
K22.9	Krankheit des Ösophagus, nicht näher bezeichnet
K73.0	Chronische persistierende Hepatitis, anderenorts nicht klassifiziert
K73.1	Chronische lobuläre Hepatitis, anderenorts nicht klassifiziert
K73.2	Chronische aktive Hepatitis, anderenorts nicht klassifiziert
K73.8	Sonstige chronische Hepatitis, anderenorts nicht klassifiziert
K73.9	Chronische Hepatitis, nicht näher bezeichnet
K76.0	Fettleber [fettige Degeneration], anderenorts nicht klassifiziert
N01.0	Rapid-progressives nephritisches Syndrom: Minimale glomeruläre Läsion
N01.1	Rapid-progressives nephritisches Syndrom: Fokale und segmentale glomeruläre Läsionen
N01.2	Rapid-progressives nephritisches Syndrom: Diffuse membranöse Glomerulonephritis
N01.3	Rapid-progressives nephritisches Syndrom: Diffuse mesangioproliferative Glomerulonephritis
N01.4	Rapid-progressives nephritisches Syndrom: Diffuse endokapillär-proliferative Glomerulonephritis
N01.5	Rapid-progressives nephritisches Syndrom: Diffuse mesangiokapilläre Glomerulonephritis
N01.6	Rapid-progressives nephritisches Syndrom: Dense-deposit-Krankheit
N01.7	Rapid-progressives nephritisches Syndrom: Glomerulonephritis mit diffuser Halbmondbildung
N01.8	Rapid-progressives nephritisches Syndrom: Sonstige morphologische Veränderungen
N01.9	Rapid-progressives nephritisches Syndrom: Art der morphologischen Veränderung nicht näher bezeichnet
N03.0	Chronisches nephritisches Syndrom: Minimale glomeruläre Läsion
N03.1	Chronisches nephritisches Syndrom: Fokale und segmentale glomeruläre Läsionen
N03.2	Chronisches nephritisches Syndrom: Diffuse membranöse Glomerulonephritis
N03.3	Chronisches nephritisches Syndrom: Diffuse mesangioproliferative Glomerulonephritis
N03.4	Chronisches nephritisches Syndrom: Diffuse endokapillär-proliferative Glomerulonephritis
N03.5	Chronisches nephritisches Syndrom: Diffuse mesangiokapilläre Glomerulonephritis
N03.6	Chronisches nephritisches Syndrom: Dense-deposit-Krankheit
N03.7	Chronisches nephritisches Syndrom: Glomerulonephritis mit diffuser Halbmondbildung
N03.8	Chronisches nephritisches Syndrom: Sonstige morphologische Veränderungen
N03.9	Chronisches nephritisches Syndrom: Art der morphologischen Veränderung nicht näher bezeichnet
N17.01	Akutes Nierenversagen mit Tubulusnekrose: Stadium 1
N17.02	Akutes Nierenversagen mit Tubulusnekrose: Stadium 2
N17.09	Akutes Nierenversagen mit Tubulusnekrose: Stadium nicht näher bezeichnet
N17.11	Akutes Nierenversagen mit akuter Rindennekrose: Stadium 1
N17.12	Akutes Nierenversagen mit akuter Rindennekrose: Stadium 2
N17.19	Akutes Nierenversagen mit akuter Rindennekrose: Stadium nicht näher bezeichnet

Code	Beschreibung
N17.21	Akutes Nierenversagen mit Marknekrose: Stadium 1
N17.22	Akutes Nierenversagen mit Marknekrose: Stadium 2
N17.29	Akutes Nierenversagen mit Marknekrose: Stadium nicht näher bezeichnet
N17.81	Sonstiges akutes Nierenversagen: Stadium 1
N17.82	Sonstiges akutes Nierenversagen: Stadium 2
N17.89	Sonstiges akutes Nierenversagen: Stadium nicht näher bezeichnet
N17.91	Akutes Nierenversagen, nicht näher bezeichnet: Stadium 1
N17.92	Akutes Nierenversagen, nicht näher bezeichnet: Stadium 2

Code	Beschreibung
N17.99	Akutes Nierenversagen, nicht näher bezeichnet: Stadium nicht näher bezeichnet
N18.1	Chronische Nierenkrankheit, Stadium 1
N18.2	Chronische Nierenkrankheit, Stadium 2
N18.3	Chronische Nierenkrankheit, Stadium 3
N18.4	Chronische Nierenkrankheit, Stadium 4
N18.80	Einseitige chronische Nierenfunktionsstörung
N18.89	Sonstige chronische Nierenkrankheit, Stadium nicht näher bezeichnet
N18.9	Chronische Nierenkrankheit, nicht näher bezeichnet
N19	Nicht näher bezeichnete Niereninsuffizienz

Tabelle D.6g Alterskonflikt - Pubertät

Code	Beschreibung
E30.8	Sonstige Pubertätsstörungen
E30.9	Pubertätsstörung, nicht näher bezeichnet

Code	Beschreibung
N92.2	Zu starke Menstruation im Pubertätsalter

Tabelle D.6j Alterskonflikt - Erwachsene

Code	Beschreibung
A51.0	Primärer syphilitischer Genitalaffekt
A51.1	Analer Primäraffekt bei Syphilis
A51.2	Primäraffekt bei Syphilis, sonstige Lokalisationen
A51.3	Sekundäre Syphilis der Haut und der Schleimhäute
A51.4	Sonstige sekundäre Syphilis
A51.5	Latente Frühsyphilis
A51.9	Frühsyphilis, nicht näher bezeichnet
A52.0	Kardiovaskuläre Syphilis
A52.1	Floride Neurosyphilis
A52.2	Asymptomatische Neurosyphilis
A52.3	Neurosyphilis, nicht näher bezeichnet
A52.7	Sonstige floride Spätsyphilis
A52.8	Latente Spätsyphilis
A52.9	Spätsyphilis, nicht näher bezeichnet
A53.0	Latente Syphilis, nicht als früh oder spät bezeichnet
A53.9	Syphilis, nicht näher bezeichnet
A54.0	Gonokokkeninfektion des unteren Urogenitaltraktes ohne periurethralen Abszess oder Abszess der Glandulae urethrales
A54.1	Gonokokkeninfektion des unteren Urogenitaltraktes mit periurethralem Abszess oder Abszess der Glandulae urethrales
A54.2	Pelviperitonitis durch Gonokokken und Gonokokkeninfektionen sonstiger Urogenitalorgane
A54.3	Gonokokkeninfektion des Auges
A54.4	Gonokokkeninfektion des Muskel-Skelett-Systems
A54.5	Gonokokkenpharyngitis
A54.6	Gonokokkeninfektion des Anus und des Rektums
A54.8	Sonstige Gonokokkeninfektionen
A54.9	Gonokokkeninfektion, nicht näher bezeichnet
A55	Lymphogranuloma inguinale (venereum) durch Chlamydien
A56.0	Chlamydieninfektion des unteren Urogenitaltraktes
A56.1	Chlamydieninfektion des Pelviperitoneums und sonstiger Urogenitalorgane
A56.2	Chlamydieninfektion des Urogenitaltraktes, nicht näher bezeichnet
A56.3	Chlamydieninfektion des Anus und des Rektums
A56.4	Chlamydieninfektion des Pharynx
A56.8	Durch Geschlechtsverkehr übertragene Chlamydieninfektion an sonstigen Lokalisationen
A57	Ulcus molle (venereum)
A58	Granuloma venereum (inguinale)
A59.0	Trichomoniasis urogenitalis
A59.8	Sonstige Lokalisationen der Trichomoniasis
A59.9	Trichomoniasis, nicht näher bezeichnet
A60.0	Infektion der Genitalorgane und des Urogenitaltraktes durch Herpesviren
A60.1	Infektion der Perianalhaut und des Rektums durch Herpesviren
A60.9	Infektion des Anogenitalbereiches durch Herpesviren, nicht näher bezeichnet
A63.0	Anogenitale (venerische) Warzen
A63.8	Sonstige näher bezeichnete, vorwiegend durch Geschlechtsverkehr übertragene Krankheiten
A64	Durch Geschlechtsverkehr übertragene Krankheiten, nicht näher bezeichnet
B91	Folgezustände der Poliomyelitis
F01.0	Vaskuläre Demenz mit akutem Beginn
F01.1	Multiinfarkt-Demenz
F01.2	Subkortikale vaskuläre Demenz
F01.3	Gemischte kortikale und subkortikale vaskuläre Demenz
F01.8	Sonstige vaskuläre Demenz
F01.9	Vaskuläre Demenz, nicht näher bezeichnet
F03	Nicht näher bezeichnete Demenz

Code	Beschreibung
G12.2	Motoneuron-Krankheit
G14	Postpolio-Syndrom
G20.00	Primäres Parkinson-Syndrom mit fehlender oder geringer Beeinträchtigung: Ohne Wirkungsfluktuation
G20.01	Primäres Parkinson-Syndrom mit fehlender oder geringer Beeinträchtigung: Mit Wirkungsfluktuation
G20.10	Primäres Parkinson-Syndrom mit mäßiger bis schwerer Beeinträchtigung: Ohne Wirkungsfluktuation
G20.11	Primäres Parkinson-Syndrom mit mäßiger bis schwerer Beeinträchtigung: Mit Wirkungsfluktuation
G20.20	Primäres Parkinson-Syndrom mit schwerster Beeinträchtigung: Ohne Wirkungsfluktuation
G20.21	Primäres Parkinson-Syndrom mit schwerster Beeinträchtigung: Mit Wirkungsfluktuation
G20.90	Primäres Parkinson-Syndrom, nicht näher bezeichnet: Ohne Wirkungsfluktuation
G20.91	Primäres Parkinson-Syndrom, nicht näher bezeichnet: Mit Wirkungsfluktuation
G25.80	Periodische Beinbewegungen im Schlaf
G25.81	Syndrom der unruhigen Beine [Restless-Legs-Syndrom]
G25.88	Sonstige näher bezeichnete extrapyramidale Krankheiten und Bewegungsstörungen
G25.9	Extrapyramidale Krankheit oder Bewegungsstörung, nicht näher bezeichnet
G26	Extrapyramidale Krankheiten und Bewegungsstörungen bei anderenorts klassifizierten Krankheiten
G30.8	Sonstige Alzheimer-Krankheit {F00.2}
G30.9	Alzheimer-Krankheit, nicht näher bezeichnet {F00.9}
G31.0	Umschriebene Hirnatrophie
G31.1	Senile Degeneration des Gehirns, anderenorts nicht klassifiziert
G31.2	Degeneration des Nervensystems durch Alkohol
G31.81	Mitochondriale Zytopathie
G31.82	Lewy-Körper-Krankheit
G31.88	Sonstige näher bezeichnete degenerative Krankheiten des Nervensystems
G31.9	Degenerative Krankheit des Nervensystems, nicht näher bezeichnet
G32.0	Subakute kombinierte Degeneration des Rückenmarks bei anderenorts klassifizierten Krankheiten
G32.8	Sonstige näher bezeichnete degenerative Krankheiten des Nervensystems bei anderenorts klassifizierten Krankheiten
G35.0	Erstmanifestation einer multiplen Sklerose
G35.10	Multiple Sklerose mit vorherrschend schubförmigem Verlauf: Ohne Angabe einer akuten Exazerbation oder Progression
G35.11	Multiple Sklerose mit vorherrschend schubförmigem Verlauf: Mit Angabe einer akuten Exazerbation oder Progression
G35.20	Multiple Sklerose mit primär-chronischem Verlauf: Ohne Angabe einer akuten Exazerbation oder Progression
G35.21	Multiple Sklerose mit primär-chronischem Verlauf: Mit Angabe einer akuten Exazerbation oder Progression
G35.30	Multiple Sklerose mit sekundär-chronischem Verlauf: Ohne Angabe einer akuten Exazerbation oder Progression

Code	Beschreibung
G35.31	Multiple Sklerose mit sekundär-chronischem Verlauf: Mit Angabe einer akuten Exazerbation oder Progression
G35.9	Multiple Sklerose, nicht näher bezeichnet
I10.00	Benigne essentielle Hypertonie: Ohne Angabe einer hypertensiven Krise
I10.01	Benigne essentielle Hypertonie: Mit Angabe einer hypertensiven Krise
I10.10	Maligne essentielle Hypertonie: Ohne Angabe einer hypertensiven Krise
I10.11	Maligne essentielle Hypertonie: Mit Angabe einer hypertensiven Krise
I10.90	Essentielle Hypertonie, nicht näher bezeichnet: Ohne Angabe einer hypertensiven Krise
I10.91	Essentielle Hypertonie, nicht näher bezeichnet: Mit Angabe einer hypertensiven Krise
I11.00	Hypertensive Herzkrankheit mit (kongestiver) Herzinsuffizienz: Ohne Angabe einer hypertensiven Krise
I11.01	Hypertensive Herzkrankheit mit (kongestiver) Herzinsuffizienz: Mit Angabe einer hypertensiven Krise
I11.90	Hypertensive Herzkrankheit ohne (kongestive) Herzinsuffizienz: Ohne Angabe einer hypertensiven Krise
I11.91	Hypertensive Herzkrankheit ohne (kongestive) Herzinsuffizienz: Mit Angabe einer hypertensiven Krise
I13.00	Hypertensive Herz- und Nierenkrankheit mit (kongestiver) Herzinsuffizienz: Ohne Angabe einer hypertensiven Krise
I13.01	Hypertensive Herz- und Nierenkrankheit mit (kongestiver) Herzinsuffizienz: Mit Angabe einer hypertensiven Krise
I13.10	Hypertensive Herz- und Nierenkrankheit mit Niereninsuffizienz: Ohne Angabe einer hypertensiven Krise
I13.11	Hypertensive Herz- und Nierenkrankheit mit Niereninsuffizienz: Mit Angabe einer hypertensiven Krise
I13.20	Hypertensive Herz- und Nierenkrankheit mit (kongestiver) Herzinsuffizienz und Niereninsuffizienz: Ohne Angabe einer hypertensiven Krise
I13.21	Hypertensive Herz- und Nierenkrankheit mit (kongestiver) Herzinsuffizienz und Niereninsuffizienz: Mit Angabe einer hypertensiven Krise
I13.90	Hypertensive Herz- und Nierenkrankheit, nicht näher bezeichnet: Ohne Angabe einer hypertensiven Krise
I13.91	Hypertensive Herz- und Nierenkrankheit, nicht näher bezeichnet: Mit Angabe einer hypertensiven Krise
I15.20	Hypertonie als Folge von endokrinen Krankheiten: Ohne Angabe einer hypertensiven Krise
I15.21	Hypertonie als Folge von endokrinen Krankheiten: Mit Angabe einer hypertensiven Krise
I15.80	Sonstige sekundäre Hypertonie: Ohne Angabe einer hypertensiven Krise
I15.81	Sonstige sekundäre Hypertonie: Mit Angabe einer hypertensiven Krise
I15.90	Sekundäre Hypertonie, nicht näher bezeichnet: Ohne Angabe einer hypertensiven Krise
I15.91	Sekundäre Hypertonie, nicht näher bezeichnet: Mit Angabe einer hypertensiven Krise
I20.0	Instabile Angina pectoris
I20.1	Angina pectoris mit nachgewiesenem Koronarspasmus
I20.8	Sonstige Formen der Angina pectoris

Code	Beschreibung
I20.9	Angina pectoris, nicht näher bezeichnet
I21.0	Akuter transmuraler Myokardinfarkt der Vorderwand
I21.1	Akuter transmuraler Myokardinfarkt der Hinterwand
I21.2	Akuter transmuraler Myokardinfarkt an sonstigen Lokalisationen
I21.3	Akuter transmuraler Myokardinfarkt an nicht näher bezeichneter Lokalisation
I21.4	Akuter subendokardialer Myokardinfarkt
I21.9	Akuter Myokardinfarkt, nicht näher bezeichnet
I22.0	Rezidivierender Myokardinfarkt der Vorderwand
I22.1	Rezidivierender Myokardinfarkt der Hinterwand
I22.8	Rezidivierender Myokardinfarkt an sonstigen Lokalisationen
I22.9	Rezidivierender Myokardinfarkt an nicht näher bezeichneter Lokalisation
I23.0	Hämoperikard als akute Komplikation nach akutem Myokardinfarkt
I23.1	Vorhofseptumdefekt als akute Komplikation nach akutem Myokardinfarkt
I23.2	Ventrikelseptumdefekt als akute Komplikation nach akutem Myokardinfarkt
I23.3	Ruptur der Herzwand ohne Hämoperikard als akute Komplikation nach akutem Myokardinfarkt
I23.4	Ruptur der Chordae tendineae als akute Komplikation nach akutem Myokardinfarkt
I23.5	Papillarmuskelruptur als akute Komplikation nach akutem Myokardinfarkt
I23.6	Thrombose des Vorhofes, des Herzohres oder der Kammer als akute Komplikation nach akutem Myokardinfarkt
I23.8	Sonstige akute Komplikationen nach akutem Myokardinfarkt
I24.0	Koronarthrombose ohne nachfolgenden Myokardinfarkt
I24.8	Sonstige Formen der akuten ischämischen Herzkrankheit
I24.9	Akute ischämische Herzkrankheit, nicht näher bezeichnet
I25.0	Atherosklerotische Herz-Kreislauf-Krankheit, so beschrieben
I25.10	Atherosklerotische Herzkrankheit: Ohne hämodynamisch wirksame Stenosen
I25.11	Atherosklerotische Herzkrankheit: Ein-Gefäß-Erkrankung
I25.12	Atherosklerotische Herzkrankheit: Zwei-Gefäß-Erkrankung
I25.13	Atherosklerotische Herzkrankheit: Drei-Gefäß-Erkrankung
I25.14	Atherosklerotische Herzkrankheit: Stenose des linken Hauptstammes
I25.15	Atherosklerotische Herzkrankheit: Mit stenosierten Bypass-Gefäßen
I25.16	Atherosklerotische Herzkrankheit: Mit stenosierten Stents
I25.19	Atherosklerotische Herzkrankheit: Nicht näher bezeichnet
I25.20	Alter Myokardinfarkt: 29 Tage bis unter 4 Monate zurückliegend
I25.21	Alter Myokardinfarkt: 4 Monate bis unter 1 Jahr zurückliegend
I25.22	Alter Myokardinfarkt: 1 Jahr und länger zurückliegend
I25.29	Alter Myokardinfarkt: Nicht näher bezeichnet
I25.3	Herz-(Wand-)Aneurysma
I25.4	Koronararterienaneurysma
I25.5	Ischämische Kardiomyopathie
I25.6	Stumme Myokardischämie
I25.8	Sonstige Formen der chronischen ischämischen Herzkrankheit

Code	Beschreibung
I25.9	Chronische ischämische Herzkrankheit, nicht näher bezeichnet
I70.0	Atherosklerose der Aorta
I70.1	Atherosklerose der Nierenarterie
I70.20	Atherosklerose der Extremitätenarterien: Becken-Bein-Typ, ohne Beschwerden
I70.21	Atherosklerose der Extremitätenarterien: Becken-Bein-Typ, mit belastungsinduziertem Ischämieschmerz, Gehstrecke 200 m und mehr
I70.22	Atherosklerose der Extremitätenarterien: Becken-Bein-Typ, mit belastungsinduziertem Ischämieschmerz, Gehstrecke weniger als 200 m
I70.23	Atherosklerose der Extremitätenarterien: Becken-Bein-Typ, mit Ruheschmerz
I70.24	Atherosklerose der Extremitätenarterien: Becken-Bein-Typ, mit Ulzeration
I70.25	Atherosklerose der Extremitätenarterien: Becken-Bein-Typ, mit Gangrän
I70.26	Atherosklerose der Extremitätenarterien: Schulter-Arm-Typ, alle Stadien
I70.29	Atherosklerose der Extremitätenarterien: Sonstige und nicht näher bezeichnet
I70.8	Atherosklerose sonstiger Arterien
I70.9	Generalisierte und nicht näher bezeichnete Atherosklerose
I83.0	Varizen der unteren Extremitäten mit Ulzeration
I83.1	Varizen der unteren Extremitäten mit Entzündung
I83.2	Varizen der unteren Extremitäten mit Ulzeration und Entzündung
I83.9	Varizen der unteren Extremitäten ohne Ulzeration oder Entzündung
I97.20	Lymphödem nach (partieller) Mastektomie (mit Lymphadenektomie), Stadium I
I97.21	Lymphödem nach (partieller) Mastektomie (mit Lymphadenektomie), Stadium II
I97.22	Lymphödem nach (partieller) Mastektomie (mit Lymphadenektomie), Stadium III
I97.29	Lymphödem nach (partieller) Mastektomie, nicht näher bezeichnet
I98.2	Ösophagus- und Magenvarizen bei anderenorts klassifizierten Krankheiten, ohne Angabe einer Blutung
I98.3	Ösophagus- und Magenvarizen bei anderenorts klassifizierten Krankheiten, mit Angabe einer Blutung
J44.90	Chronische obstruktive Lungenkrankheit, nicht näher bezeichnet: FEV1 <35 % des Sollwertes
J44.91	Chronische obstruktive Lungenkrankheit, nicht näher bezeichnet: FEV1 >=35 % und <50 % des Sollwertes
J44.92	Chronische obstruktive Lungenkrankheit, nicht näher bezeichnet: FEV1 >=50 % und <70 % des Sollwertes
J44.93	Chronische obstruktive Lungenkrankheit, nicht näher bezeichnet: FEV1 >=70 % des Sollwertes
J44.99	Chronische obstruktive Lungenkrankheit, nicht näher bezeichnet: FEV1 nicht näher bezeichnet
J60	Kohlenbergarbeiter-Pneumokoniose
J61	Pneumokoniose durch Asbest und sonstige anorganische Fasern
J62.0	Pneumokoniose durch Talkum-Staub
J62.8	Pneumokoniose durch sonstigen Quarzstaub
J63.0	Aluminose (Lunge)
J63.1	Bauxitfibrose (Lunge)
J63.2	Berylliose
J63.3	Graphitfibrose (Lunge)
J63.4	Siderose
J63.5	Stannose
J63.8	Pneumokoniose durch sonstige näher bezeichnete anorganische Stäube
J64	Nicht näher bezeichnete Pneumokoniose
J65	Pneumokoniose in Verbindung mit Tuberkulose
J66.0	Byssinose

Code	Beschreibung
J66.1	Flachsarbeiter-Krankheit
J66.2	Cannabiose
J66.8	Krankheit der Atemwege durch sonstige näher bezeichnete organische Stäube
J67.0	Farmerlunge
J67.1	Bagassose
J67.2	Vogelzüchterlunge
J67.3	Suberose
J67.4	Malzarbeiter-Lunge
J67.5	Pilzarbeiter-Lunge
J67.6	Ahornrindenschäler-Lunge
J67.7	Befeuchter- und Klimaanlage-Lunge
J67.8	Allergische Alveolitis durch organische Stäube
J67.9	Allergische Alveolitis durch nicht näher bezeichneten organischen Staub
J84.0	Alveoläre und parietoalveoläre Krankheitszustände
J84.1	Sonstige interstitielle Lungenkrankheiten mit Fibrose
J84.8	Sonstige näher bezeichnete interstitielle Lungenkrankheiten
J84.9	Interstitielle Lungenkrankheit, nicht näher bezeichnet
K25.0	Ulcus ventriculi: Akut, mit Blutung
K25.1	Ulcus ventriculi: Akut, mit Perforation
K25.2	Ulcus ventriculi: Akut, mit Blutung und Perforation
K25.3	Ulcus ventriculi: Akut, ohne Blutung oder Perforation
K25.4	Ulcus ventriculi: Chronisch oder nicht näher bezeichnet, mit Blutung
K25.5	Ulcus ventriculi: Chronisch oder nicht näher bezeichnet, mit Perforation
K25.6	Ulcus ventriculi: Chronisch oder nicht näher bezeichnet, mit Blutung und Perforation
K25.7	Ulcus ventriculi: Chronisch, ohne Blutung oder Perforation
K25.9	Ulcus ventriculi: Weder als akut noch als chronisch bezeichnet, ohne Blutung oder Perforation
K26.0	Ulcus duodeni: Akut, mit Blutung
K26.1	Ulcus duodeni: Akut, mit Perforation
K26.2	Ulcus duodeni: Akut, mit Blutung und Perforation
K26.3	Ulcus duodeni: Akut, ohne Blutung oder Perforation
K26.4	Ulcus duodeni: Chronisch oder nicht näher bezeichnet, mit Blutung
K26.5	Ulcus duodeni: Chronisch oder nicht näher bezeichnet, mit Perforation
K26.6	Ulcus duodeni: Chronisch oder nicht näher bezeichnet, mit Blutung und Perforation
K26.7	Ulcus duodeni: Chronisch, ohne Blutung oder Perforation
K26.9	Ulcus duodeni: Weder als akut noch als chronisch bezeichnet, ohne Blutung oder Perforation
K27.0	Ulcus pepticum, Lokalisation nicht näher bezeichnet: Akut, mit Blutung
K27.1	Ulcus pepticum, Lokalisation nicht näher bezeichnet: Akut, mit Perforation
K27.2	Ulcus pepticum, Lokalisation nicht näher bezeichnet: Akut, mit Blutung und Perforation
K27.3	Ulcus pepticum, Lokalisation nicht näher bezeichnet: Akut, ohne Blutung oder Perforation
K27.4	Ulcus pepticum, Lokalisation nicht näher bezeichnet: Chronisch oder nicht näher bezeichnet, mit Blutung
K27.5	Ulcus pepticum, Lokalisation nicht näher bezeichnet: Chronisch oder nicht näher bezeichnet, mit Perforation
K27.6	Ulcus pepticum, Lokalisation nicht näher bezeichnet: Chronisch oder nicht näher bezeichnet, mit Blutung und Perforation
K27.7	Ulcus pepticum, Lokalisation nicht näher bezeichnet: Chronisch, ohne Blutung oder Perforation

Code	Beschreibung
K27.9	Ulcus pepticum, Lokalisation nicht näher bezeichnet: Weder als akut noch als chronisch bezeichnet, ohne Blutung oder Perforation
K28.0	Ulcus pepticum jejuni: Akut, mit Blutung
K28.1	Ulcus pepticum jejuni: Akut, mit Perforation
K28.2	Ulcus pepticum jejuni: Akut, mit Blutung und Perforation
K28.3	Ulcus pepticum jejuni: Akut, ohne Blutung oder Perforation
K28.4	Ulcus pepticum jejuni: Chronisch oder nicht näher bezeichnet, mit Blutung
K28.5	Ulcus pepticum jejuni: Chronisch oder nicht näher bezeichnet, mit Perforation
K28.6	Ulcus pepticum jejuni: Chronisch oder nicht näher bezeichnet, mit Blutung und Perforation
K28.7	Ulcus pepticum jejuni: Chronisch, ohne Blutung oder Perforation
K28.9	Ulcus pepticum jejuni: Weder als akut noch als chronisch bezeichnet, ohne Blutung oder Perforation
K64.0	Hämorrhoiden 1. Grades
K64.1	Hämorrhoiden 2. Grades
K64.2	Hämorrhoiden 3. Grades
K64.3	Hämorrhoiden 4. Grades
K64.4	Marisken als Folgezustand von Hämorrhoiden
K64.5	Perianalvenenthrombose
K64.8	Sonstige Hämorrhoiden
K64.9	Hämorrhoiden, nicht näher bezeichnet
K70.0	Alkoholische Fettleber
K70.1	Alkoholische Hepatitis
K70.2	Alkoholische Fibrose und Sklerose der Leber
K70.3	Alkoholische Leberzirrhose
K70.40	Akutes und subakutes alkoholisches Leberversagen
K70.41	Chronisches alkoholisches Leberversagen
K70.42	Akut-auf-chronisches alkoholisches Leberversagen
K70.48	Sonstiges und nicht näher bezeichnetes alkoholisches Leberversagen
K70.9	Alkoholische Leberkrankheit, nicht näher bezeichnet
K80.00	Gallenblasenstein mit akuter Cholezystitis: Ohne Angabe einer Gallenwegsobstruktion
K80.01	Gallenblasenstein mit akuter Cholezystitis: Mit Gallenwegsobstruktion
K80.10	Gallenblasenstein mit sonstiger Cholezystitis: Ohne Angabe einer Gallenwegsobstruktion
K80.11	Gallenblasenstein mit sonstiger Cholezystitis: Mit Gallenwegsobstruktion
K80.20	Gallenblasenstein ohne Cholezystitis: Ohne Angabe einer Gallenwegsobstruktion
K80.21	Gallenblasenstein ohne Cholezystitis: Mit Gallenwegsobstruktion
K80.30	Gallengangsstein mit Cholangitis: Ohne Angabe einer Gallenwegsobstruktion
K80.31	Gallengangsstein mit Cholangitis: Mit Gallenwegsobstruktion
K80.40	Gallengangsstein mit Cholezystitis: Ohne Angabe einer Gallenwegsobstruktion
K80.41	Gallengangsstein mit Cholezystitis: Mit Gallenwegsobstruktion
K80.50	Gallengangsstein ohne Cholangitis oder Cholezystitis: Ohne Angabe einer Gallenwegsobstruktion
K80.51	Gallengangsstein ohne Cholangitis oder Cholezystitis: Mit Gallenwegsobstruktion
K80.80	Sonstige Cholelithiasis: Ohne Angabe einer Gallenwegsobstruktion
K80.81	Sonstige Cholelithiasis: Mit Gallenwegsobstruktion
K81.0	Akute Cholezystitis
K81.1	Chronische Cholezystitis
K81.8	Sonstige Formen der Cholezystitis
K81.9	Cholezystitis, nicht näher bezeichnet
K82.0	Verschluss der Gallenblase

Code	Beschreibung
K82.1	Hydrops der Gallenblase
K82.2	Perforation der Gallenblase
K82.3	Gallenblasenfistel
K82.4	Cholesteatose der Gallenblase
K82.8	Sonstige näher bezeichnete Krankheiten der Gallenblase
K82.9	Krankheit der Gallenblase, nicht näher bezeichnet
K83.00	Primär sklerosierende Cholangitis
K83.01	Sekundär sklerosierende Cholangitis
K83.08	Sonstige Cholangitis
K83.09	Cholangitis, nicht näher bezeichnet
K83.1	Verschluss des Gallenganges
K83.2	Perforation des Gallenganges
K83.3	Fistel des Gallenganges
K83.4	Spasmus des Sphinkter Oddi
K83.5	Biliäre Zyste
K83.8	Sonstige näher bezeichnete Krankheiten der Gallenwege
K83.9	Krankheit der Gallenwege, nicht näher bezeichnet
T85.75	Infektion und entzündliche Reaktion durch interne Prothesen, Implantate oder Transplantate im hepatobiliären System und im Pankreas
K85.00	Idiopathische akute Pankreatitis: Ohne Angabe einer Organkomplikation
K85.01	Idiopathische akute Pankreatitis: Mit Organkomplikation
K85.10	Biliäre akute Pankreatitis: Ohne Angabe einer Organkomplikation
K85.11	Biliäre akute Pankreatitis: Mit Organkomplikation
K85.20	Alkoholinduzierte akute Pankreatitis: Ohne Angabe einer Organkomplikation
K85.21	Alkoholinduzierte akute Pankreatitis: Mit Organkomplikation
K85.30	Medikamenten-induzierte akute Pankreatitis: Ohne Angabe einer Organkomplikation
K85.31	Medikamenten-induzierte akute Pankreatitis: Mit Organkomplikation
K85.80	Sonstige akute Pankreatitis: Ohne Angabe einer Organkomplikation
K85.81	Sonstige akute Pankreatitis: Mit Organkomplikation
K85.90	Akute Pankreatitis, nicht näher bezeichnet: Ohne Angabe einer Organkomplikation
K85.91	Akute Pankreatitis, nicht näher bezeichnet: Mit Organkomplikation
K86.0	Alkoholinduzierte chronische Pankreatitis
K86.1	Sonstige chronische Pankreatitis
K86.2	Pankreaszyste
K86.3	Pseudozyste des Pankreas
K86.80	Pankreasgangstein ohne Pankreasgangstenose
K86.81	Pankreasgangstein mit Pankreasgangstenose
K86.82	Sonstige Pankreasgangstenose
K86.83	Exokrine Pankreasinsuffizienz
K86.84	Pankreatoduodenale Fistel
K86.88	Sonstige näher bezeichnete Krankheiten des Pankreas
K86.9	Krankheit des Pankreas, nicht näher bezeichnet
K87.0	Krankheiten der Gallenblase und der Gallenwege bei anderenorts klassifizierten Krankheiten
K87.1	Krankheiten des Pankreas bei anderenorts klassifizierten Krankheiten
K91.5	Postcholezystektomie-Syndrom
M02.30	Reiter-Krankheit: Mehrere Lokalisationen
M02.31	Reiter-Krankheit: Schulterregion
M02.32	Reiter-Krankheit: Oberarm
M02.33	Reiter-Krankheit: Unterarm
M02.34	Reiter-Krankheit: Hand
M02.35	Reiter-Krankheit: Beckenregion und Oberschenkel
M02.36	Reiter-Krankheit: Unterschenkel
M02.37	Reiter-Krankheit: Knöchel und Fuß
M02.38	Reiter-Krankheit: Sonstige

Code	Beschreibung
M02.39	Reiter-Krankheit: Nicht näher bezeichnete Lokalisation
M05.10	Lungenmanifestation der seropositiven chronischen Polyarthritis {J99.0}: Mehrere Lokalisationen
M05.11	Lungenmanifestation der seropositiven chronischen Polyarthritis {J99.0}: Schulterregion
M05.12	Lungenmanifestation der seropositiven chronischen Polyarthritis {J99.0}: Oberarm
M05.13	Lungenmanifestation der seropositiven chronischen Polyarthritis {J99.0}: Unterarm
M05.14	Lungenmanifestation der seropositiven chronischen Polyarthritis {J99.0}: Hand
M05.15	Lungenmanifestation der seropositiven chronischen Polyarthritis {J99.0}: Beckenregion und Oberschenkel
M05.16	Lungenmanifestation der seropositiven chronischen Polyarthritis {J99.0}: Unterschenkel
M05.17	Lungenmanifestation der seropositiven chronischen Polyarthritis {J99.0}: Knöchel und Fuß
M05.18	Lungenmanifestation der seropositiven chronischen Polyarthritis {J99.0}: Sonstige
M05.19	Lungenmanifestation der seropositiven chronischen Polyarthritis {J99.0}: Nicht näher bezeichnete Lokalisation
M05.20	Vaskulitis bei seropositiver chronischer Polyarthritis: Mehrere Lokalisationen
M05.21	Vaskulitis bei seropositiver chronischer Polyarthritis: Schulterregion
M05.22	Vaskulitis bei seropositiver chronischer Polyarthritis: Oberarm
M05.23	Vaskulitis bei seropositiver chronischer Polyarthritis: Unterarm
M05.24	Vaskulitis bei seropositiver chronischer Polyarthritis: Hand
M05.25	Vaskulitis bei seropositiver chronischer Polyarthritis: Beckenregion und Oberschenkel
M05.26	Vaskulitis bei seropositiver chronischer Polyarthritis: Unterschenkel
M05.27	Vaskulitis bei seropositiver chronischer Polyarthritis: Knöchel und Fuß
M05.28	Vaskulitis bei seropositiver chronischer Polyarthritis: Sonstige
M05.29	Vaskulitis bei seropositiver chronischer Polyarthritis: Nicht näher bezeichnete Lokalisation
M05.30	Seropositive chronische Polyarthritis mit Beteiligung sonstiger Organe und Organsysteme: Mehrere Lokalisationen
M05.31	Seropositive chronische Polyarthritis mit Beteiligung sonstiger Organe und Organsysteme: Schulterregion
M05.32	Seropositive chronische Polyarthritis mit Beteiligung sonstiger Organe und Organsysteme: Oberarm
M05.33	Seropositive chronische Polyarthritis mit Beteiligung sonstiger Organe und Organsysteme: Unterarm
M05.34	Seropositive chronische Polyarthritis mit Beteiligung sonstiger Organe und Organsysteme: Hand
M05.35	Seropositive chronische Polyarthritis mit Beteiligung sonstiger Organe und Organsysteme: Beckenregion und Oberschenkel
M05.36	Seropositive chronische Polyarthritis mit Beteiligung sonstiger Organe und Organsysteme: Unterschenkel
M05.37	Seropositive chronische Polyarthritis mit Beteiligung sonstiger Organe und Organsysteme: Knöchel und Fuß
M05.38	Seropositive chronische Polyarthritis mit Beteiligung sonstiger Organe und Organsysteme: Sonstige
M05.39	Seropositive chronische Polyarthritis mit Beteiligung sonstiger Organe und Organsysteme: Nicht näher bezeichnete Lokalisation
M05.80	Sonstige seropositive chronische Polyarthritis: Mehrere Lokalisationen
M05.81	Sonstige seropositive chronische Polyarthritis: Schulterregion
M05.82	Sonstige seropositive chronische Polyarthritis: Oberarm
M05.83	Sonstige seropositive chronische Polyarthritis: Unterarm
M05.84	Sonstige seropositive chronische Polyarthritis: Hand
M05.85	Sonstige seropositive chronische Polyarthritis: Beckenregion und Oberschenkel
M05.86	Sonstige seropositive chronische Polyarthritis: Unterschenkel
M05.87	Sonstige seropositive chronische Polyarthritis: Knöchel und Fuß
M05.88	Sonstige seropositive chronische Polyarthritis: Sonstige
M05.89	Sonstige seropositive chronische Polyarthritis: Nicht näher bezeichnete Lokalisation
M05.90	Seropositive chronische Polyarthritis, nicht näher bezeichnet: Mehrere Lokalisationen
M05.91	Seropositive chronische Polyarthritis, nicht näher bezeichnet: Schulterregion
M05.92	Seropositive chronische Polyarthritis, nicht näher bezeichnet: Oberarm
M05.93	Seropositive chronische Polyarthritis, nicht näher bezeichnet: Unterarm
M05.94	Seropositive chronische Polyarthritis, nicht näher bezeichnet: Hand
M05.95	Seropositive chronische Polyarthritis, nicht näher bezeichnet: Beckenregion und Oberschenkel
M05.96	Seropositive chronische Polyarthritis, nicht näher bezeichnet: Unterschenkel
M05.97	Seropositive chronische Polyarthritis, nicht näher bezeichnet: Knöchel und Fuß
M05.98	Seropositive chronische Polyarthritis, nicht näher bezeichnet: Sonstige
M05.99	Seropositive chronische Polyarthritis, nicht näher bezeichnet: Nicht näher bezeichnete Lokalisation
M06.00	Seronegative chronische Polyarthritis: Mehrere Lokalisationen
M06.01	Seronegative chronische Polyarthritis: Schulterregion
M06.02	Seronegative chronische Polyarthritis: Oberarm
M06.03	Seronegative chronische Polyarthritis: Unterarm
M06.04	Seronegative chronische Polyarthritis: Hand
M06.05	Seronegative chronische Polyarthritis: Beckenregion und Oberschenkel
M06.06	Seronegative chronische Polyarthritis: Unterschenkel
M06.07	Seronegative chronische Polyarthritis: Knöchel und Fuß
M06.08	Seronegative chronische Polyarthritis: Sonstige
M06.09	Seronegative chronische Polyarthritis: Nicht näher bezeichnete Lokalisation
M06.10	Adulte Form der Still-Krankheit: Mehrere Lokalisationen
M06.11	Adulte Form der Still-Krankheit: Schulterregion
M06.12	Adulte Form der Still-Krankheit: Oberarm
M06.13	Adulte Form der Still-Krankheit: Unterarm
M06.14	Adulte Form der Still-Krankheit: Hand
M06.15	Adulte Form der Still-Krankheit: Beckenregion und Oberschenkel
M06.16	Adulte Form der Still-Krankheit: Unterschenkel
M06.17	Adulte Form der Still-Krankheit: Knöchel und Fuß
M06.18	Adulte Form der Still-Krankheit: Sonstige
M06.19	Adulte Form der Still-Krankheit: Nicht näher bezeichnete Lokalisation
M06.80	Sonstige näher bezeichnete chronische Polyarthritis: Mehrere Lokalisationen
M06.81	Sonstige näher bezeichnete chronische Polyarthritis: Schulterregion

Code	Beschreibung
M06.82	Sonstige näher bezeichnete chronische Polyarthritis: Oberarm
M06.83	Sonstige näher bezeichnete chronische Polyarthritis: Unterarm
M06.84	Sonstige näher bezeichnete chronische Polyarthritis: Hand
M06.85	Sonstige näher bezeichnete chronische Polyarthritis: Beckenregion und Oberschenkel
M06.86	Sonstige näher bezeichnete chronische Polyarthritis: Unterschenkel
M06.87	Sonstige näher bezeichnete chronische Polyarthritis: Knöchel und Fuß
M06.88	Sonstige näher bezeichnete chronische Polyarthritis: Sonstige
M06.89	Sonstige näher bezeichnete chronische Polyarthritis: Nicht näher bezeichnete Lokalisation
M06.90	Chronische Polyarthritis, nicht näher bezeichnet: Mehrere Lokalisationen
M06.91	Chronische Polyarthritis, nicht näher bezeichnet: Schulterregion
M06.92	Chronische Polyarthritis, nicht näher bezeichnet: Oberarm
M06.93	Chronische Polyarthritis, nicht näher bezeichnet: Unterarm
M06.94	Chronische Polyarthritis, nicht näher bezeichnet: Hand
M06.95	Chronische Polyarthritis, nicht näher bezeichnet: Beckenregion und Oberschenkel
M06.96	Chronische Polyarthritis, nicht näher bezeichnet: Unterschenkel
M06.97	Chronische Polyarthritis, nicht näher bezeichnet: Knöchel und Fuß
M06.98	Chronische Polyarthritis, nicht näher bezeichnet: Sonstige
M06.99	Chronische Polyarthritis, nicht näher bezeichnet: Nicht näher bezeichnete Lokalisation
M07.00	Distale interphalangeale Arthritis psoriatica {L40.5}: Mehrere Lokalisationen
M07.04	Distale interphalangeale Arthritis psoriatica {L40.5}: Hand
M07.07	Distale interphalangeale Arthritis psoriatica {L40.5}: Knöchel und Fuß
M07.09	Distale interphalangeale Arthritis psoriatica {L40.5}: Nicht näher bezeichnete Lokalisation
M07.10	Arthritis mutilans {L40.5}: Mehrere Lokalisationen
M07.11	Arthritis mutilans {L40.5}: Schulterregion
M07.12	Arthritis mutilans {L40.5}: Oberarm
M07.13	Arthritis mutilans {L40.5}: Unterarm
M07.14	Arthritis mutilans {L40.5}: Hand
M07.15	Arthritis mutilans {L40.5}: Beckenregion und Oberschenkel
M07.16	Arthritis mutilans {L40.5}: Unterschenkel
M07.17	Arthritis mutilans {L40.5}: Knöchel und Fuß
M07.18	Arthritis mutilans {L40.5}: Sonstige
M07.19	Arthritis mutilans {L40.5}: Nicht näher bezeichnete Lokalisation
M07.2	Spondylitis psoriatica {L40.5}
M07.30	Sonstige psoriatische Arthritiden {L40.5}: Mehrere Lokalisationen
M07.31	Sonstige psoriatische Arthritiden {L40.5}: Schulterregion
M07.32	Sonstige psoriatische Arthritiden {L40.5}: Oberarm
M07.33	Sonstige psoriatische Arthritiden {L40.5}: Unterarm
M07.34	Sonstige psoriatische Arthritiden {L40.5}: Hand
M07.35	Sonstige psoriatische Arthritiden {L40.5}: Beckenregion und Oberschenkel
M07.36	Sonstige psoriatische Arthritiden {L40.5}: Unterschenkel
M07.37	Sonstige psoriatische Arthritiden {L40.5}: Knöchel und Fuß
M07.38	Sonstige psoriatische Arthritiden {L40.5}: Sonstige
M07.39	Sonstige psoriatische Arthritiden {L40.5}: Nicht näher bezeichnete Lokalisation
M07.40	Arthritis bei Crohn-Krankheit [Enteritis regionalis] {K50.-}: Mehrere Lokalisationen
M07.41	Arthritis bei Crohn-Krankheit [Enteritis regionalis] {K50.-}: Schulterregion
M07.42	Arthritis bei Crohn-Krankheit [Enteritis regionalis] {K50.-}: Oberarm
M07.43	Arthritis bei Crohn-Krankheit [Enteritis regionalis] {K50.-}: Unterarm
M07.44	Arthritis bei Crohn-Krankheit [Enteritis regionalis] {K50.-}: Hand
M07.45	Arthritis bei Crohn-Krankheit [Enteritis regionalis] {K50.-}: Beckenregion und Oberschenkel
M07.46	Arthritis bei Crohn-Krankheit [Enteritis regionalis] {K50.-}: Unterschenkel
M07.47	Arthritis bei Crohn-Krankheit [Enteritis regionalis] {K50.-}: Knöchel und Fuß
M07.48	Arthritis bei Crohn-Krankheit [Enteritis regionalis] {K50.-}: Sonstige
M07.49	Arthritis bei Crohn-Krankheit [Enteritis regionalis] {K50.-}: Nicht näher bezeichnete Lokalisation
M07.50	Arthritis bei Colitis ulcerosa {K51.-}: Mehrere Lokalisationen
M07.51	Arthritis bei Colitis ulcerosa {K51.-}: Schulterregion
M07.52	Arthritis bei Colitis ulcerosa {K51.-}: Oberarm
M07.53	Arthritis bei Colitis ulcerosa {K51.-}: Unterarm
M07.54	Arthritis bei Colitis ulcerosa {K51.-}: Hand
M07.55	Arthritis bei Colitis ulcerosa {K51.-}: Beckenregion und Oberschenkel
M07.56	Arthritis bei Colitis ulcerosa {K51.-}: Unterschenkel
M07.57	Arthritis bei Colitis ulcerosa {K51.-}: Knöchel und Fuß
M07.58	Arthritis bei Colitis ulcerosa {K51.-}: Sonstige
M07.59	Arthritis bei Colitis ulcerosa {K51.-}: Nicht näher bezeichnete Lokalisation
M07.60	Sonstige Arthritiden bei gastrointestinalen Grundkrankheiten: Mehrere Lokalisationen
M07.61	Sonstige Arthritiden bei gastrointestinalen Grundkrankheiten: Schulterregion
M07.62	Sonstige Arthritiden bei gastrointestinalen Grundkrankheiten: Oberarm
M07.63	Sonstige Arthritiden bei gastrointestinalen Grundkrankheiten: Unterarm
M07.64	Sonstige Arthritiden bei gastrointestinalen Grundkrankheiten: Hand
M07.65	Sonstige Arthritiden bei gastrointestinalen Grundkrankheiten: Beckenregion und Oberschenkel
M07.66	Sonstige Arthritiden bei gastrointestinalen Grundkrankheiten: Unterschenkel
M07.67	Sonstige Arthritiden bei gastrointestinalen Grundkrankheiten: Knöchel und Fuß
M07.68	Sonstige Arthritiden bei gastrointestinalen Grundkrankheiten: Sonstige
M07.69	Sonstige Arthritiden bei gastrointestinalen Grundkrankheiten: Nicht näher bezeichnete Lokalisation
M08.70	Vaskulitis bei juveniler Arthritis: Mehrere Lokalisationen
M08.71	Vaskulitis bei juveniler Arthritis: Schulterregion
M08.72	Vaskulitis bei juveniler Arthritis: Oberarm
M08.73	Vaskulitis bei juveniler Arthritis: Unterarm
M08.74	Vaskulitis bei juveniler Arthritis: Hand
M08.75	Vaskulitis bei juveniler Arthritis: Beckenregion und Oberschenkel
M08.76	Vaskulitis bei juveniler Arthritis: Unterschenkel
M08.77	Vaskulitis bei juveniler Arthritis: Knöchel und Fuß
M08.78	Vaskulitis bei juveniler Arthritis: Sonstige

Code	Beschreibung
M08.79	Vaskulitis bei juveniler Arthritis: Nicht näher bezeichnete Lokalisation
M14.00	Gicht-Arthropathie durch Enzymdefekte und sonstige angeborene Krankheiten: Mehrere Lokalisationen
M14.01	Gicht-Arthropathie durch Enzymdefekte und sonstige angeborene Krankheiten: Schulterregion
M14.02	Gicht-Arthropathie durch Enzymdefekte und sonstige angeborene Krankheiten: Oberarm
M14.03	Gicht-Arthropathie durch Enzymdefekte und sonstige angeborene Krankheiten: Unterarm
M14.04	Gicht-Arthropathie durch Enzymdefekte und sonstige angeborene Krankheiten: Hand
M14.05	Gicht-Arthropathie durch Enzymdefekte und sonstige angeborene Krankheiten: Beckenregion und Oberschenkel
M14.06	Gicht-Arthropathie durch Enzymdefekte und sonstige angeborene Krankheiten: Unterschenkel
M14.07	Gicht-Arthropathie durch Enzymdefekte und sonstige angeborene Krankheiten: Knöchel und Fuß
M14.08	Gicht-Arthropathie durch Enzymdefekte und sonstige angeborene Krankheiten: Sonstige
M14.09	Gicht-Arthropathie durch Enzymdefekte und sonstige angeborene Krankheiten: Nicht näher bezeichnete Lokalisation
M15.0	Primäre generalisierte (Osteo-) Arthrose
M15.1	Heberden-Knoten (mit Arthropathie)
M15.2	Bouchard-Knoten (mit Arthropathie)
M15.3	Sekundäre multiple Arthrose
M15.4	Erosive (Osteo-) Arthrose
M15.8	Sonstige Polyarthrose
M15.9	Polyarthrose, nicht näher bezeichnet
M30.0	Panarteriitis nodosa
M31.5	Riesenzellarteriitis bei Polymyalgia rheumatica
M31.7	Mikroskopische Polyangiitis
M33.1	Sonstige Dermatomyositis
M35.3	Polymyalgia rheumatica
M42.10	Osteochondrose der Wirbelsäule beim Erwachsenen: Mehrere Lokalisationen der Wirbelsäule
M42.11	Osteochondrose der Wirbelsäule beim Erwachsenen: Okzipito-Atlanto-Axialbereich
M42.12	Osteochondrose der Wirbelsäule beim Erwachsenen: Zervikalbereich
M42.13	Osteochondrose der Wirbelsäule beim Erwachsenen: Zervikothorakalbereich
M42.14	Osteochondrose der Wirbelsäule beim Erwachsenen: Thorakalbereich
M42.15	Osteochondrose der Wirbelsäule beim Erwachsenen: Thorakolumbalbereich
M42.16	Osteochondrose der Wirbelsäule beim Erwachsenen: Lumbalbereich
M42.17	Osteochondrose der Wirbelsäule beim Erwachsenen: Lumbosakralbereich
M42.18	Osteochondrose der Wirbelsäule beim Erwachsenen: Sakral- und Sakrokokzygealbereich
M42.19	Osteochondrose der Wirbelsäule beim Erwachsenen: Nicht näher bezeichnete Lokalisation
M45.00	Spondylitis ankylosans: Mehrere Lokalisationen der Wirbelsäule
M45.01	Spondylitis ankylosans: Okzipito-Atlanto-Axialbereich
M45.02	Spondylitis ankylosans: Zervikalbereich
M45.03	Spondylitis ankylosans: Zervikothorakalbereich
M45.04	Spondylitis ankylosans: Thorakalbereich
M45.05	Spondylitis ankylosans: Thorakolumbalbereich
M45.06	Spondylitis ankylosans: Lumbalbereich
M45.07	Spondylitis ankylosans: Lumbosakralbereich
M45.08	Spondylitis ankylosans: Sakral- und Sakrokokzygealbereich

Code	Beschreibung
M45.09	Spondylitis ankylosans: Nicht näher bezeichnete Lokalisation
M48.00	Spinal(kanal)stenose: Mehrere Lokalisationen der Wirbelsäule
M48.01	Spinal(kanal)stenose: Okzipito-Atlanto-Axialbereich
M48.02	Spinal(kanal)stenose: Zervikalbereich
M48.03	Spinal(kanal)stenose: Zervikothorakalbereich
M48.04	Spinal(kanal)stenose: Thorakalbereich
M48.05	Spinal(kanal)stenose: Thorakolumbalbereich
M48.06	Spinal(kanal)stenose: Lumbalbereich
M48.07	Spinal(kanal)stenose: Lumbosakralbereich
M48.08	Spinal(kanal)stenose: Sakral- und Sakrokokzygealbereich
M48.09	Spinal(kanal)stenose: Nicht näher bezeichnete Lokalisation
M50.1	Zervikaler Bandscheibenschaden mit Radikulopathie
M50.2	Sonstige zervikale Bandscheibenverlagerung
M50.3	Sonstige zervikale Bandscheibendegeneration
M50.8	Sonstige zervikale Bandscheibenschäden
M50.9	Zervikaler Bandscheibenschaden, nicht näher bezeichnet
M51.0	Lumbale und sonstige Bandscheibenschäden mit Myelopathie {G99.2}
M51.1	Lumbale und sonstige Bandscheibenschäden mit Radikulopathie {G55.1}
M51.2	Sonstige näher bezeichnete Bandscheibenverlagerung
M51.3	Sonstige näher bezeichnete Bandscheibendegeneration
M51.4	Schmorl-Knötchen
M51.8	Sonstige näher bezeichnete Bandscheibenschäden
M51.9	Bandscheibenschaden, nicht näher bezeichnet
M72.0	Fibromatose der Palmarfaszie [Dupuytren-Kontraktur]
M75.0	Adhäsive Entzündung der Schultergelenkkapsel
M75.1	Läsionen der Rotatorenmanschette
M75.3	Tendinitis calcarea im Schulterbereich
M75.4	Impingement-Syndrom der Schulter
M80.10	Osteoporose mit pathologischer Fraktur nach Ovarektomie: Mehrere Lokalisationen
M80.11	Osteoporose mit pathologischer Fraktur nach Ovarektomie: Schulterregion
M80.12	Osteoporose mit pathologischer Fraktur nach Ovarektomie: Oberarm
M80.13	Osteoporose mit pathologischer Fraktur nach Ovarektomie: Unterarm
M80.14	Osteoporose mit pathologischer Fraktur nach Ovarektomie: Hand
M80.15	Osteoporose mit pathologischer Fraktur nach Ovarektomie: Beckenregion und Oberschenkel
M80.16	Osteoporose mit pathologischer Fraktur nach Ovarektomie: Unterschenkel
M80.17	Osteoporose mit pathologischer Fraktur nach Ovarektomie: Knöchel und Fuß
M80.18	Osteoporose mit pathologischer Fraktur nach Ovarektomie: Sonstige
M80.19	Osteoporose mit pathologischer Fraktur nach Ovarektomie: Nicht näher bezeichnete Lokalisation
M80.50	Idiopathische Osteoporose mit pathologischer Fraktur: Mehrere Lokalisationen
M80.51	Idiopathische Osteoporose mit pathologischer Fraktur: Schulterregion
M80.52	Idiopathische Osteoporose mit pathologischer Fraktur: Oberarm
M80.53	Idiopathische Osteoporose mit pathologischer Fraktur: Unterarm
M80.54	Idiopathische Osteoporose mit pathologischer Fraktur: Hand
M80.55	Idiopathische Osteoporose mit pathologischer Fraktur: Beckenregion und Oberschenkel

Code	Beschreibung
M80.56	Idiopathische Osteoporose mit pathologischer Fraktur: Unterschenkel
M80.57	Idiopathische Osteoporose mit pathologischer Fraktur: Knöchel und Fuß
M80.58	Idiopathische Osteoporose mit pathologischer Fraktur: Sonstige
M80.59	Idiopathische Osteoporose mit pathologischer Fraktur: Nicht näher bezeichnete Lokalisation
M81.10	Osteoporose nach Ovarektomie: Mehrere Lokalisationen
M81.11	Osteoporose nach Ovarektomie: Schulterregion
M81.12	Osteoporose nach Ovarektomie: Oberarm
M81.13	Osteoporose nach Ovarektomie: Unterarm
M81.14	Osteoporose nach Ovarektomie: Hand
M81.15	Osteoporose nach Ovarektomie: Beckenregion und Oberschenkel
M81.16	Osteoporose nach Ovarektomie: Unterschenkel
M81.17	Osteoporose nach Ovarektomie: Knöchel und Fuß
M81.18	Osteoporose nach Ovarektomie: Sonstige
M81.19	Osteoporose nach Ovarektomie: Nicht näher bezeichnete Lokalisation
M81.50	Idiopathische Osteoporose: Mehrere Lokalisationen
M81.51	Idiopathische Osteoporose: Schulterregion
M81.52	Idiopathische Osteoporose: Oberarm
M81.53	Idiopathische Osteoporose: Unterarm
M81.54	Idiopathische Osteoporose: Hand
M81.55	Idiopathische Osteoporose: Beckenregion und Oberschenkel
M81.56	Idiopathische Osteoporose: Unterschenkel
M81.57	Idiopathische Osteoporose: Knöchel und Fuß
M81.58	Idiopathische Osteoporose: Sonstige
M81.59	Idiopathische Osteoporose: Nicht näher bezeichnete Lokalisation
M83.20	Osteomalazie im Erwachsenenalter durch Malabsorption: Mehrere Lokalisationen
M83.21	Osteomalazie im Erwachsenenalter durch Malabsorption: Schulterregion
M83.22	Osteomalazie im Erwachsenenalter durch Malabsorption: Oberarm
M83.23	Osteomalazie im Erwachsenenalter durch Malabsorption: Unterarm
M83.24	Osteomalazie im Erwachsenenalter durch Malabsorption: Hand
M83.25	Osteomalazie im Erwachsenenalter durch Malabsorption: Beckenregion und Oberschenkel
M83.26	Osteomalazie im Erwachsenenalter durch Malabsorption: Unterschenkel
M83.27	Osteomalazie im Erwachsenenalter durch Malabsorption: Knöchel und Fuß
M83.28	Osteomalazie im Erwachsenenalter durch Malabsorption: Sonstige
M83.29	Osteomalazie im Erwachsenenalter durch Malabsorption: Nicht näher bezeichnete Lokalisation
M83.30	Osteomalazie im Erwachsenenalter durch Fehl- oder Mangelernährung: Mehrere Lokalisationen
M83.31	Osteomalazie im Erwachsenenalter durch Fehl- oder Mangelernährung: Schulterregion
M83.32	Osteomalazie im Erwachsenenalter durch Fehl- oder Mangelernährung: Oberarm
M83.33	Osteomalazie im Erwachsenenalter durch Fehl- oder Mangelernährung: Unterarm
M83.34	Osteomalazie im Erwachsenenalter durch Fehl- oder Mangelernährung: Hand
M83.35	Osteomalazie im Erwachsenenalter durch Fehl- oder Mangelernährung: Beckenregion und Oberschenkel
M83.36	Osteomalazie im Erwachsenenalter durch Fehl- oder Mangelernährung: Unterschenkel
M83.37	Osteomalazie im Erwachsenenalter durch Fehl- oder Mangelernährung: Knöchel und Fuß

Code	Beschreibung
M83.38	Osteomalazie im Erwachsenenalter durch Fehl- oder Mangelernährung: Sonstige
M83.39	Osteomalazie im Erwachsenenalter durch Fehl- oder Mangelernährung: Nicht näher bezeichnete Lokalisation
M83.40	Aluminiumosteopathie: Mehrere Lokalisationen
M83.41	Aluminiumosteopathie: Schulterregion
M83.42	Aluminiumosteopathie: Oberarm
M83.43	Aluminiumosteopathie: Unterarm
M83.44	Aluminiumosteopathie: Hand
M83.45	Aluminiumosteopathie: Beckenregion und Oberschenkel
M83.46	Aluminiumosteopathie: Unterschenkel
M83.47	Aluminiumosteopathie: Knöchel und Fuß
M83.48	Aluminiumosteopathie: Sonstige
M83.49	Aluminiumosteopathie: Nicht näher bezeichnete Lokalisation
M83.50	Sonstige arzneimittelinduzierte Osteomalazie bei Erwachsenen: Mehrere Lokalisationen
M83.51	Sonstige arzneimittelinduzierte Osteomalazie bei Erwachsenen: Schulterregion
M83.52	Sonstige arzneimittelinduzierte Osteomalazie bei Erwachsenen: Oberarm
M83.53	Sonstige arzneimittelinduzierte Osteomalazie bei Erwachsenen: Unterarm
M83.54	Sonstige arzneimittelinduzierte Osteomalazie bei Erwachsenen: Hand
M83.55	Sonstige arzneimittelinduzierte Osteomalazie bei Erwachsenen: Beckenregion und Oberschenkel
M83.56	Sonstige arzneimittelinduzierte Osteomalazie bei Erwachsenen: Unterschenkel
M83.57	Sonstige arzneimittelinduzierte Osteomalazie bei Erwachsenen: Knöchel und Fuß
M83.58	Sonstige arzneimittelinduzierte Osteomalazie bei Erwachsenen: Sonstige
M83.59	Sonstige arzneimittelinduzierte Osteomalazie bei Erwachsenen: Nicht näher bezeichnete Lokalisation
M83.80	Sonstige Osteomalazie im Erwachsenenalter: Mehrere Lokalisationen
M83.81	Sonstige Osteomalazie im Erwachsenenalter: Schulterregion
M83.82	Sonstige Osteomalazie im Erwachsenenalter: Oberarm
M83.83	Sonstige Osteomalazie im Erwachsenenalter: Unterarm
M83.84	Sonstige Osteomalazie im Erwachsenenalter: Hand
M83.85	Sonstige Osteomalazie im Erwachsenenalter: Beckenregion und Oberschenkel
M83.86	Sonstige Osteomalazie im Erwachsenenalter: Unterschenkel
M83.87	Sonstige Osteomalazie im Erwachsenenalter: Knöchel und Fuß
M83.88	Sonstige Osteomalazie im Erwachsenenalter: Sonstige
M83.89	Sonstige Osteomalazie im Erwachsenenalter: Nicht näher bezeichnete Lokalisation
M83.90	Osteomalazie im Erwachsenenalter, nicht näher bezeichnet: Mehrere Lokalisationen
M83.91	Osteomalazie im Erwachsenenalter, nicht näher bezeichnet: Schulterregion
M83.92	Osteomalazie im Erwachsenenalter, nicht näher bezeichnet: Oberarm
M83.93	Osteomalazie im Erwachsenenalter, nicht näher bezeichnet: Unterarm
M83.94	Osteomalazie im Erwachsenenalter, nicht näher bezeichnet: Hand
M83.95	Osteomalazie im Erwachsenenalter, nicht näher bezeichnet: Beckenregion und Oberschenkel
M83.96	Osteomalazie im Erwachsenenalter, nicht näher bezeichnet: Unterschenkel

Code	Beschreibung
M83.97	Osteomalazie im Erwachsenenalter, nicht näher bezeichnet: Knöchel und Fuß
M83.98	Osteomalazie im Erwachsenenalter, nicht näher bezeichnet: Sonstige
M83.99	Osteomalazie im Erwachsenenalter, nicht näher bezeichnet: Nicht näher bezeichnete Lokalisation
M88.0	Osteodystrophia deformans der Schädelknochen
M88.80	Osteodystrophia deformans sonstiger Knochen: Mehrere Lokalisationen
M88.81	Osteodystrophia deformans sonstiger Knochen: Schulterregion
M88.82	Osteodystrophia deformans sonstiger Knochen: Oberarm
M88.83	Osteodystrophia deformans sonstiger Knochen: Unterarm
M88.84	Osteodystrophia deformans sonstiger Knochen: Hand
M88.85	Osteodystrophia deformans sonstiger Knochen: Beckenregion und Oberschenkel
M88.86	Osteodystrophia deformans sonstiger Knochen: Unterschenkel
M88.87	Osteodystrophia deformans sonstiger Knochen: Knöchel und Fuß
M88.88	Osteodystrophia deformans sonstiger Knochen: Sonstige
M88.89	Osteodystrophia deformans sonstiger Knochen: Nicht näher bezeichnete Lokalisation
M88.90	Osteodystrophia deformans, nicht näher bezeichnet: Mehrere Lokalisationen
M88.91	Osteodystrophia deformans, nicht näher bezeichnet: Schulterregion
M88.92	Osteodystrophia deformans, nicht näher bezeichnet: Oberarm
M88.93	Osteodystrophia deformans, nicht näher bezeichnet: Unterarm
M88.94	Osteodystrophia deformans, nicht näher bezeichnet: Hand
M88.95	Osteodystrophia deformans, nicht näher bezeichnet: Beckenregion und Oberschenkel
M88.96	Osteodystrophia deformans, nicht näher bezeichnet: Unterschenkel
M88.97	Osteodystrophia deformans, nicht näher bezeichnet: Knöchel und Fuß
M88.98	Osteodystrophia deformans, nicht näher bezeichnet: Sonstige
M88.99	Osteodystrophia deformans, nicht näher bezeichnet: Nicht näher bezeichnete Lokalisation
M93.1	Kienböck-Krankheit bei Erwachsenen
M96.1	Postlaminektomie-Syndrom, anderenorts nicht klassifiziert

Code	Beschreibung
M96.3	Kyphose nach Laminektomie
N14.0	Analgetika-Nephropathie
N18.5	Chronische Nierenkrankheit, Stadium 5
N34.1	Unspezifische Urethritis
N34.2	Sonstige Urethritis
N39.3	Belastungsinkontinenz [Stressinkontinenz]
N41.0	Akute Prostatitis
N46	Sterilität beim Mann
N48.4	Impotenz organischen Ursprungs
N60.0	Solitärzyste der Mamma
N60.1	Diffuse zystische Mastopathie
N60.2	Fibroadenose der Mamma
N60.3	Fibrosklerose der Mamma
N60.4	Ektasie der Ductus lactiferi
N60.8	Sonstige gutartige Mammadysplasien
N60.9	Gutartige Mammadysplasie, nicht näher bezeichnet
N64.3	Galaktorrhoe, nicht im Zusammenhang mit der Geburt
N70.1	Chronische Salpingitis und Oophoritis
N71.1	Chronische entzündliche Krankheit des Uterus, ausgenommen der Zervix
N72	Entzündliche Krankheit der Cervix uteri
N73.1	Chronische Parametritis und Entzündung des Beckenbindegewebes
N73.4	Chronische Pelveoperitonitis bei der Frau
N80.0	Endometriose des Uterus
N80.1	Endometriose des Ovars
N80.2	Endometriose der Tuba uterina
N80.3	Endometriose des Beckenperitoneums
N80.4	Endometriose des Septum rectovaginale und der Vagina
N80.5	Endometriose des Darmes
N80.6	Endometriose in Hautnarbe
N80.8	Sonstige Endometriose
N80.9	Endometriose, nicht näher bezeichnet
N81.0	Urethrozele bei der Frau
N81.1	Zystozele
N81.2	Partialprolaps des Uterus und der Vagina
N81.3	Totalprolaps des Uterus und der Vagina
N81.4	Uterovaginalprolaps, nicht näher bezeichnet
N81.5	Vaginale Enterozele
N81.6	Rektozele
N81.8	Sonstiger Genitalprolaps bei der Frau
N81.9	Genitalprolaps bei der Frau, nicht näher bezeichnet
N99.2	Postoperative Adhäsionen der Vagina
N99.3	Prolaps des Scheidenstumpfes nach Hysterektomie
R86.1	Abnorme Befunde in Untersuchungsmaterialien aus den männlichen Genitalorganen: Abnormer Hormonwert

Tabelle D.6k Alterskonflikt - Reife Erwachsene

Code	Beschreibung
B90.0	Folgezustände einer Tuberkulose des Zentralnervensystems
B90.1	Folgezustände einer Tuberkulose des Urogenitalsystems
B90.2	Folgezustände einer Tuberkulose der Knochen und der Gelenke
B90.8	Folgezustände einer Tuberkulose sonstiger Organe
B90.9	Folgezustände einer Tuberkulose der Atmungsorgane und einer nicht näher bezeichneten Tuberkulose
U69.6	Sekundäre Schlüsselnummer zur Spezifizierung eines Hustens als chronisch idiopathisch und chronisch refraktär
B92	Folgezustände der Lepra
C61	Bösartige Neubildung der Prostata
G30.1	Alzheimer-Krankheit mit spätem Beginn {F00.1}
H25.0	Cataracta senilis incipiens
H25.1	Cataracta nuclearis senilis
H25.2	Cataracta senilis, Morgagni-Typ
H25.8	Sonstige senile Kataraktformen
H25.9	Senile Katarakt, nicht näher bezeichnet
M80.00	Postmenopausale Osteoporose mit pathologischer Fraktur: Mehrere Lokalisationen
M80.01	Postmenopausale Osteoporose mit pathologischer Fraktur: Schulterregion
M80.02	Postmenopausale Osteoporose mit pathologischer Fraktur: Oberarm
M80.03	Postmenopausale Osteoporose mit pathologischer Fraktur: Unterarm
M80.04	Postmenopausale Osteoporose mit pathologischer Fraktur: Hand
M80.05	Postmenopausale Osteoporose mit pathologischer Fraktur: Beckenregion und Oberschenkel
M80.06	Postmenopausale Osteoporose mit pathologischer Fraktur: Unterschenkel
M80.07	Postmenopausale Osteoporose mit pathologischer Fraktur: Knöchel und Fuß
M80.08	Postmenopausale Osteoporose mit pathologischer Fraktur: Sonstige
M80.09	Postmenopausale Osteoporose mit pathologischer Fraktur: Nicht näher bezeichnete Lokalisation
M81.00	Postmenopausale Osteoporose: Mehrere Lokalisationen
M81.01	Postmenopausale Osteoporose: Schulterregion
M81.02	Postmenopausale Osteoporose: Oberarm
M81.03	Postmenopausale Osteoporose: Unterarm
M81.04	Postmenopausale Osteoporose: Hand
M81.05	Postmenopausale Osteoporose: Beckenregion und Oberschenkel
M81.06	Postmenopausale Osteoporose: Unterschenkel
M81.07	Postmenopausale Osteoporose: Knöchel und Fuß
M81.08	Postmenopausale Osteoporose: Sonstige
M81.09	Postmenopausale Osteoporose: Nicht näher bezeichnete Lokalisation
M83.10	Senile Osteomalazie: Mehrere Lokalisationen
M83.11	Senile Osteomalazie: Schulterregion
M83.12	Senile Osteomalazie: Oberarm
M83.13	Senile Osteomalazie: Unterarm
M83.14	Senile Osteomalazie: Hand
M83.15	Senile Osteomalazie: Beckenregion und Oberschenkel
M83.16	Senile Osteomalazie: Unterschenkel
M83.17	Senile Osteomalazie: Knöchel und Fuß
M83.18	Senile Osteomalazie: Sonstige
M83.19	Senile Osteomalazie: Nicht näher bezeichnete Lokalisation
N40	Prostatahyperplasie
N41.1	Chronische Prostatitis
N41.2	Prostataabszess
N41.3	Prostatazystitis
N41.8	Sonstige entzündliche Krankheiten der Prostata
N41.9	Entzündliche Krankheit der Prostata, nicht näher bezeichnet
N42.0	Prostatastein
N42.1	Kongestion und Blutung der Prostata
N42.2	Prostataatrophie
N42.8	Sonstige näher bezeichnete Krankheiten der Prostata
N42.9	Krankheit der Prostata, nicht näher bezeichnet
N51.0	Krankheiten der Prostata bei anderenorts klassifizierten Krankheiten
N95.0	Postmenopausenblutung
N95.1	Zustände im Zusammenhang mit der Menopause und dem Klimakterium
N95.2	Atrophische Kolpitis in der Postmenopause
N95.3	Zustände im Zusammenhang mit artifizieller Menopause
N95.8	Sonstige näher bezeichnete klimakterische Störungen
N95.9	Klimakterische Störung, nicht näher bezeichnet
R54	Senilität

Glossar

Aufgenommener Patient

Patient, für den eine formale Spitalaufnahme erfolgt ist, entweder als Mehrtages-Fall (mehr als ein Belegungstag) oder als Fall mit der Verweildauer ein Belegungstag.

Aufnahmedatum

Datum, an dem die Behandlungsepisode des aufgenommenen Patienten beginnt.

Aufnahmegewicht

Gewicht zum Zeitpunkt der Spitalaufnahme für Kinder im Alter unter einem Jahr.

Basis-DRG (ADRG)

Eine oder mehrere DRGs, die grundsätzlich durch die gleiche Liste von Diagnose- oder Prozedurenkodes definiert sind. DRGs innerhalb einer Basis-DRG unterscheiden sich durch ihren Ressourcenverbrauch und sind anhand unterschiedlicher Faktoren wie komplizierende Diagnosen/Prozeduren, Alter und/oder patientenbezogener klinischer Schweregrad (PCCL) untergliedert.

CC-Ausschlussliste

Der CC-Status eines Diagnosekodes kann sich abhängig von der Hauptdiagnose und weiteren Nebendiagnosen eines Datensatzes sowie weiteren Faktoren ändern. Die CC-Ausschlussliste führt für jeden CC-Kode diejenigen weiteren Diagnosen auf, die einen Kode von der Einstufung als CC ausschliessen.

Diagnosis Related Group (DRG)

Patientenklassifikationssystem, das in einer klinisch nachvollziehbaren Weise Art und Anzahl der behandelten Spitalfälle in Bezug zum Ressourcenverbrauch des Spitals setzt.

Ein Belegungstag

Ein Belegungstag ist definiert als Aufnahme an einem Kalendertag und Entlassung am gleichen oder am darauf folgenden Kalendertag.

Entlassung

Vorgang, durch den bei einem aufgenommenen Patienten die Behandlungsepisode beendet wird.

Fehler-DRGs und sonstige DRGs

Ein Datensatz mit klinisch untypischen oder ungültigen Informationen wird einer der neun Fehler-/sonstigen DRGs der SwissDRG-Version 15.0 zugeordnet:

901A	*Ausgedehnte OR-Prozedur ohne Bezug zur Hauptdiagnose mit komplizierenden Prozeduren oder Strahlentherapie*
901B	*Ausgedehnte OR-Prozedur ohne Bezug zur Hauptdiagnose mit komplexer OR-Prozedur*
901C	*Ausgedehnte OR-Prozedur ohne Bezug zur Hauptdiagnose mit anderem Eingriff an Kopf und Wirbelsäule oder Alter < 1 Jahr*
901D	*Ausgedehnte OR-Prozedur ohne Bezug zur Hauptdiagnose*
902Z	*Nicht ausgedehnte OR-Prozedur ohne Bezug zur Hauptdiagnose*
960Z	*Nicht gruppierbar*
961Z	*Unzulässige Hauptdiagnose*
962Z	*Unzulässige Kodierung einer Sectio caesarea*
963Z	*Neonatale Diagnose unvereinbar mit Alter oder Gewicht*

Funktionen

Bestehen aus einer Zuordnungslogik und Kodes, die in mehreren MDCs oder Basis-DRGs innerhalb einer MDC verwendet werden. In der vorliegenden Version werden 29 Funktionen definiert:

- Aufwendige Konstellationen bei BNB
- Bestimmte OR-Prozeduren
- Dialyse
- Eingriff an mehreren Lokalisationen
- Frührehabilitation, ab 14 BHT
- Frührehabilitation, ab 7 BHT
- Geriatrische Akutrehabilitation, ab 14 BHT
- Geriatrische Akutrehabilitation, ab 21 BHT
- Geriatrische Akutrehabilitation, ab 7 BHT
- Hochaufwendige Konstellationen
- Hochkomplexe Vakuumbehandlung
- Intensivmedizinische Komplexbehandlung > 392 / 552 Aufwandspunkte
- Intensivmedizinische Komplexbehandlung > 980 / 1104 Aufwandspunkte
- Komplexe OR-Prozeduren
- Komplexe Vakuumbehandlung
- Komplizierende Prozeduren Prä-MDC
- Komplizierende Prozeduren
- Mehrere schwere Probleme beim Neugeborenen
- Mehrzeitige_bestimmte OR- Prozeduren
- Mehrzeitige komplexe OR-Prozeduren
- Multiviszeraleingriff
- Polytrauma
- Schwere Verbrennungen
- Schweres Problem beim Neugeborenen
- Schwerste Verbrennungen
- OR-Prozeduren ohne Bezug
- Vakuumbehandlung

- Vierzeitige bestimmte OR-Prozeduren
- Vierzeitige komplexe OR-Prozeduren

Die Funktionen [Aufnahmegewicht], [Schweres Problem beim Neugeborenen] und [Mehrere schwere Probleme beim Neugeborenen] sind auf MDC 15 beschränkt. Die Funktionen [Hochaufwendige Konstellationen], [Schwerste Verbrennungen] und [Schwere Verbrennungen] sind auf die Prä-MDC und die Funktion [Polytrauma] ist auf die Prä-MDC und die MDC 21A beschränkt.

Die anderen Funktionen werden jedoch in einer grösseren Zahl von MDCs benutzt.

German Diagnosis Related Groups (G-DRG)

Deutsches DRG-Klassifikationssystem, das in der Version 2008 eine Weiterentwicklung der deutschen G-DRG-Version 2007 ist, die eine umfassende Überarbeitung der G-DRG-Version 1.0 darstellte. Die Version 1.0 wiederum war eine Übertragung und Adaptation des AR-DRG-Systems (Australian Refined Diagnosis Related Groups) in der Version 4.1 auf deutsche Klassifikationen.

Grouper

Software zur Zuordnung von Behandlungsfällen zu MDCs und DRGs.

Hauptdiagnose (HD)

Derjenige Zustand, der am Ende des Spitalaufenthaltes als Diagnose feststeht und der der Hauptanlass für die Behandlung und Untersuchung des Patienten war. Ist mehr als ein Zustand aufgeführt, ist von der Ärztin bzw. vom Arzt derjenige auszuwählen, der den grössten Aufwand an medizinischen Mitteln erforderte.

Hauptdiagnosegruppe (MDC)

Die MDC ist eine Kategorie, die grundsätzlich auf einem Körpersystem oder einer Erkrankungsätiologie, die mit einem speziellen medizinischen Fachgebiet verbunden ist, basiert. Datensätze, die den MDCs 15, 18B, 21A und 21B, zugewiesen werden, können jedoch Hauptdiagnosen aufweisen, die zu anderen Kategorien gehören. In der SwissDRG-Version 15.0 gibt es 25 MDCs.

Komorbidität

Ein gleichzeitig bestehender Krankheitsprozess ohne kausale Bezüge. Wird üblicherweise in der Epidemiologie benutzt, um das gleichzeitige Bestehen von zwei oder mehr Krankheitsprozessen zu beschreiben.

Komplikation

Ein Krankheitsprozess oder Ereignis, das während einer Erkrankung auftritt, jedoch nicht essentieller Teil dieser Erkrankung ist, obwohl es aus der Erkrankung resultieren oder unabhängige Ursachen haben kann.

Komplikation und/oder Komorbidität (CC)

CC-Kodes sind Nebendiagnosen, die in der Regel zu einem signifikant höheren Ressourcenverbrauch führen.

Komplikations- und Komorbiditätslevel (CCL)

CCLs sind Schweregrad-Stufen, die für alle Nebendiagnosen vergeben werden. Ihr Wert kann zwischen 0 und 4 für operative und neonatologische Behandlungsfälle und zwischen 0 und 3 für medizinische Behandlungsfälle variieren und wurde aus einer Kombination von medizinischen Bewertungen und statistischen Analysen ermittelt. Die Werte bedeuten:

1	leichte Komplikation oder Komorbidität
2	mässig schwere Komplikation oder Komorbidität
3	schwere Komplikation oder Komorbidität
4	äusserst schwere Komplikation oder Komorbidität

Nebendiagnose (ND)

Krankheit oder Beschwerde, die entweder gleichzeitig mit der Hauptdiagnose besteht oder sich während des Spitalaufenthaltes entwickelt.

Nichtoperative Prozedur (NonOR-Prozedur)

Prozedur, die innerhalb einiger MDCs für die Fallgruppenzuordnung signifikant ist. Nichtoperative Prozeduren im Sinne des Systems können jedoch auch in einem OP-Saal durchgeführt werden.

Ohne nähere Angabe (o.n.A.),

Nicht näher bezeichnet (n.n.bez.)

Begriff kennzeichnet, dass die Diagnosen- oder Prozedurenangabe nicht ausreichend differenziert ist, um sie einem spezifischen Kode zuzuordnen.

Operative, „andere“ und medizinische Partitionen

Die MDCs sind in maximal drei unterschiedliche Partitionen unterteilt (operative, „andere“ und medizinische Partition). Das Vorhandensein oder Fehlen von OR- und NonOR-Prozeduren bewirkt grundsätzlich die Zuordnung eines Datensatzes zu einer der Partitionen.

Operative Prozedur (OR-Prozedur)

Prozedur, die im Rahmen der gesamten DRG-Systematik signifikant ist.

Patientenbezogener klinischer Schweregrad (PCCL)

Masszahl für den kumulativen Effekt der Komplikationen und Komorbiditäten eines Patienten, die für jede Behandlungsepisode berechnet wird. Die Ermittlung ist komplex und soll vermeiden, dass ähnliche Umstände mehrfach gewertet werden.

SwissDRG-Version 15.0

Ein von der SwissDRG AG in Bern herausgegebener Fallpauschalenkatalog, welcher eine Tarifstruktur für akut-stationäre Leistungen darstellt.

Verweildauer (VD)

Die Verweildauer eines Patienten wird durch Subtraktion des Aufnahmedatums vom Entlassungsdatum ermittelt. Alle Urlaubstage einschliesslich des Tages, an dem der Patient in Urlaub geht, gehen nicht in die Berechnung ein. Bei Aufnahme und Entlassung am gleichen Kalendertag wird eine Verweildauer von einem Tag zugewiesen.

Quellenverzeichnis

https://www.swissdrg.org